ACURA

Protected by A R

TL

Service Manual 2004

A Few Words About Safety

Service Information

The service and repair information contained in this manual is intended for use by qualified, professional technicians. Attempting service or repairs without the proper training, tools, and equipment could cause injury to you or others. It could also damage the vehicle or create an unsafe condition.

This manual describes the proper methods and procedures for performing service, maintenance, and repairs. Some procedures require the use of specially designed tools and dedicated equipment. Any person who intends to use a replacement part, service procedure, or a tool that is not recommended by Honda, must determine the risks to their personal safety and the safe operation of the vehicle.

If you need to replace a part, use Honda parts with the correct part number or an equivalent part. We strongly recommend that you do not use replacement parts of inferior quality.

FOR YOUR CUSTOMER'S SAFETY

Proper service and maintenance are essential to the customer's safety and the reliability of the vehicle. Any error or oversight while servicing a vehicle can result in faulty operation, damage to the vehicle, or injury to others.

⚠WARNING

Improper service or repairs can create an unsafe condition that can cause your customer or others to be seriously hurt or killed.
Follow the procedures and precautions in this manual and other service materials carefully.

FOR YOUR SAFETY

Because this manual is intended for the professional service technician, we do not provide warnings about many basic shop safety practices (e.g., Hot parts—wear gloves). If you have not received shop safety training or do not feel confident about your knowledge of safe servicing practices, we recommend that you do not attempt to perform the procedures described in this manual.

⚠WARNING

Failure to properly follow instructions and precautions can cause you to be seriously hurt or killed.
Follow the procedures and precautions in this manual carefully.

Some of the most important general service safety precautions are given below. However, we cannot warn you of every conceivable hazard that can arise in performing service and repair procedures. Only you can decide whether or not you should perform a given task.

IMPORTANT SAFETY PRECAUTIONS

- Make sure you have a clear understanding of all basic shop safety practices, and that you are wearing appropriate clothing and using safety equipment. When performing any service task, be especially careful of the following:
  - Read all of the instructions before you begin, and make sure you have the tools, the replacement or repair parts, and the skills required to perform the tasks safely and completely.
  - Protect your eyes by using proper safety glasses, goggles, or face shields anytime you hammer, drill, grind, or work around pressurized air or liquids and springs, or other stored-energy components. If there is any doubt, put on eye protection.
  - Use other protective wear when necessary, for example, gloves or safety shoes. Handling hot or sharp parts can cause severe burns or cuts. Before you grab something that looks like it can hurt you, stop and put on gloves.
  - Protect yourself and others whenever you have the vehicle up in the air. Anytime you lift the vehicle, either with a hoist or a jack, make sure that it is always securely supported. Use jack stands.
  - Protect yourself by wearing an approved welding helmet, gloves, and safety shoes anytime you are welding. You can receive burns from hot parts, allow the parts to cool before working in that area.
  - Protect yourself from paints and harmful chemicals by wearing an approved respirator, eye protection, and gloves whenever you are painting. Spray paint only in an approved paint booth that is well ventilated.

- Make sure the engine is off before you begin any servicing procedures, unless the instruction tells you to do otherwise. This will help eliminate several potential hazards:
  - Carbon monoxide poisoning from engine exhaust. Be sure there is adequate ventilation whenever you run the engine.
  - Burns from hot parts or coolant. Let the engine and exhaust system cool before working in those areas.
  - Injury from moving parts. If the instruction tells you to run the engine, be sure your hands, fingers, and clothing are out of the way.

- Gasoline vapors and hydrogen gases from batteries are explosive. To reduce the possibility of a fire or explosion, be careful when working around gasoline or batteries.
  - Use only a nonflammable solvent, not gasoline to clean parts.
  - Never drain or store gasoline in an open container.
  - Keep all cigarettes, sparks and flames away from the battery and all fuel-related parts.

Protected Under DMCA

INTRODUCTION

How to Use This Manual

This manual is divided into 23 sections. The first page of each section is marked with a black tab that lines up with its corresponding thumb index tab on this page and the back cover. You can quickly find the first page of each section without looking through a full table of contents. The symbols printed at the top corner of each page can also be used as a quick reference system.
Each section includes:

1. A table of contents, or an exploded view index showing:
   - Parts disassembly sequence.
   - Bolt torques and thread sizes.
   - Page references to descriptions in text.
2. Disassembly/assembly procedures and tools.
3. Inspection.
4. Testing/troubleshooting.
5. Repair.
6. Adjustments.

Safety Messages

Your safety, and the safety of others, is very important. To help you make informed decisions, we have provided safety messages, and other safety information throughout this manual. Of course, it is not practical or possible to warn you about all the hazards associated with servicing this vehicle. You must use your own good judgment.

You will find important safety information in a variety of forms including:

- **Safety Labels** – on the vehicle.
- **Safety Messages** – preceded by a safety alert symbol ⚠ and one of three signal words, DANGER, WARNING, or CAUTION. These signal words mean:

⚠ DANGER	You WILL be KILLED or SERIOUSLY HURT if you don't follow instructions.
⚠ WARNING	You CAN be KILLED or SERIOUSLY HURT if you don't follow instructions.
⚠ CAUTION	You CAN be HURT if you don't follow instructions.

- **Instructions** – how to service this vehicle correctly and safely.

All information contained in this manual is based on the latest product information available at the time of printing. We reserve the right to make changes at anytime without notice. No part of this publication may be reproduced, or stored in a retrieval system, or transmitted, in any form by any means, electronic, mechanical, photocopying, recording, or otherwise, without the prior written permission of the publisher. This includes text, figures, and tables.

As you read this manual, you will find information that is preceded by a NOTICE symbol. The purpose of this message is to help prevent damage to your vehicle, other property, or the environment.

First Edition 09/2003 2,176 pages
All Rights Reserved
Specifications apply to U.S.A. and Canada

HONDA MOTOR CO.,LTD.
Service Publication Office

As sections with * include SRS components; special precautions are required when servicing.

General Info
Specifications
Maintenance
Engine Electrical
Engine
Cooling
Fuel and Emissions
*Transaxle
*Steering
Suspension
*Brakes (Including VSA)
*Body
*Heating, Ventilation and Air Conditioning
*Body Electrical
*Restraints

Protected by AR

SUPPLEMENTAL RESTRAINT SYSTEM (SRS)

The Acura TL SRS includes a driver's airbag in the steering wheel hub, a passenger's airbag in the dashboard above the glove box, seat belt tensioners in the front seat belt retractors, side curtain airbags in the sides of the roof, and side airbags in the front seat-backs. Information necessary to safely service the SRS is included in this Service Manual. Items marked with an asterisk (*) on the contents page include or are located near SRS components. Servicing, disassembling, or replacing these items requires special precautions and tools, and should be done only by an authorized Acura dealer.

- To avoid rendering the SRS inoperative, which could lead to personal injury or death in the event of a severe frontal collision, all SRS service work must be performed by an authorized Acura dealer.
- Improper service procedures, including incorrect removal and installation of the SRS, could lead to personal injury caused by unintentional deployment of the airbags and/or side airbags.
- Do not bump or impact the SRS unit, front impact sensors, side impact sensors whenever the ignition switch is ON (II), or for at least 3 minutes after the ignition switch is turned OFF. Otherwise, the system may fail in a collision, or airbags may deploy.
- SRS electrical connectors are identified by yellow color coding. Related components are located in the steering column, front console, dashboard, dashboard lower panel, in the dashboard above the glove box, in the front seats, in the roof side, and around the floor. Do not use electrical test equipment on these circuits.

Protected by AR

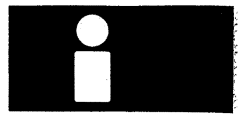

General Information

Chassis and Paint Codes 1-2

Identification Number Locations 1-3

Warning/Caution Label Locations 1-4

Under-hood Emission Control Label 1-6

Lift and Support Points 1-7

Towing 1-8

Parts Marking 1-10

Protected by AR

Chassis and Paint Codes

Vehicle Identification Number

19U UA6 5 5 * 4 A 000001
a b c d e f g h

a. Manufacturer, Make and Type of Vehicle
19U: HONDA OF AMERICA MFG., INC. U.S.A.
ACURA passenger vehicle
b. Line, Body and Engine Type
UA6: ACURA TL/J32A3
c. Body Type and Transmission Type
5: 4-door Sedan/6-speed Manual
6: 4-door Sedan/5-speed Automatic
d. Vehicle Grade (Series)
2: TL with 5-speed A/T
5: TL with 6-speed M/T
6: TL with 6-speed M/T and Hi-performance summer tire
e. Check Digit
f. Model Year
4: 2004
g. Factory Code
A:Marysville, Ohio Factory in U.S.A.
h. Serial Number
000001—: U.S. model
800001—: Canada model

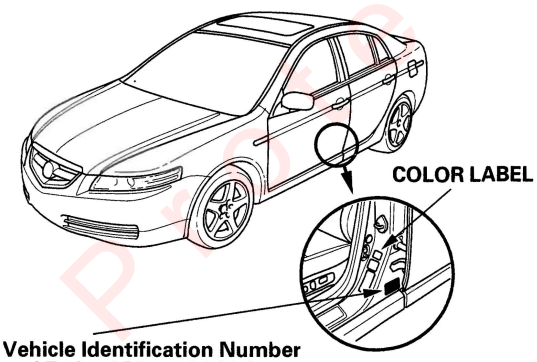

Vehicle Identification Number and Federal Motor Vehicle Safety Standard Certification.

Vehicle Identification Number and Canadian Motor Vehicle Safety Standard Certification.

Engine Number

J32A3 - 1000001
a b

a. Engine Type
J32A3: 3.2-liter SOHC VTEC Sequential Multiport Fuel-injected engine
b. Serial Number

Transmission Number

DEC6 - 1500001
a b

a. Transmission Type
DEC6: 6-speed Manual
BDGA: 5-speed Automatic
b. Serial Number

Paint Code

Code	Color	U.S.	Canada
NH-603P	White Diamond Pearl	○	○
NH-623M	Satin Silver Metallic	○	○
NH-643M	Anthracite Metallic	○	○
B-92PV	Nighthawk Black Pearl	○	○
B-527P	Abyss Blue Pearl	○	○
G-516P	Deep Green Pearl	○	
R-522P	Redondo Red Pearl	○	○
YR-538M	Desert Mist Metallic	○	○

Protected by AR

Identification Number Locations

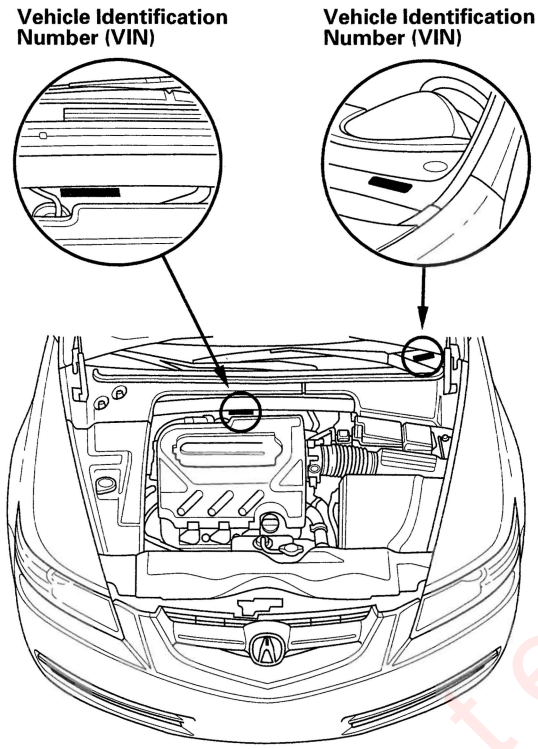

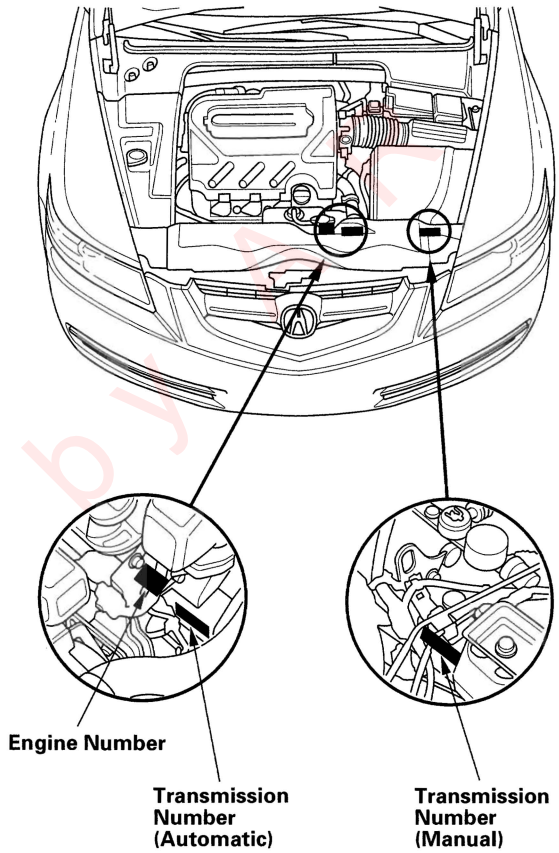

Protected by

Warning/Caution Label Locations

NOTE: FRONT PASSENGER (CHILD SEAT) AIRBAG WARNING TAG is on the glove box in the U.S. model.

Front Passenger's Compartment:

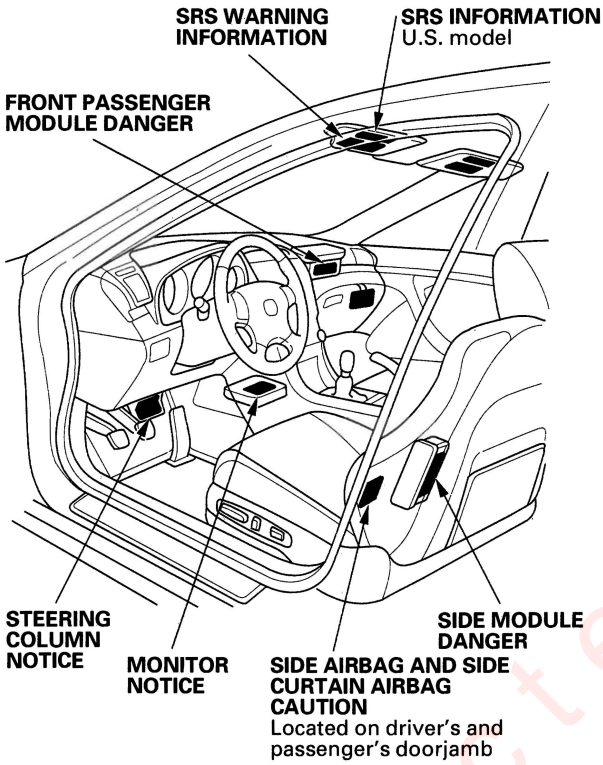

Rear Passenger's Compartment:

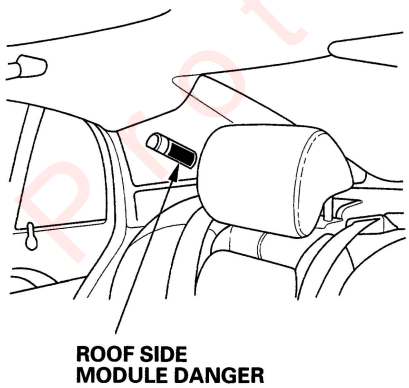

Steering Wheel:

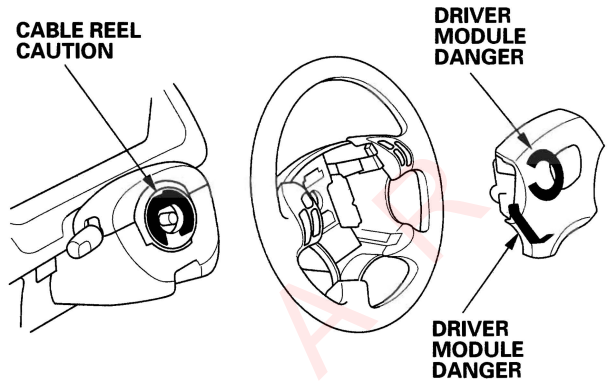

Protected by ARK

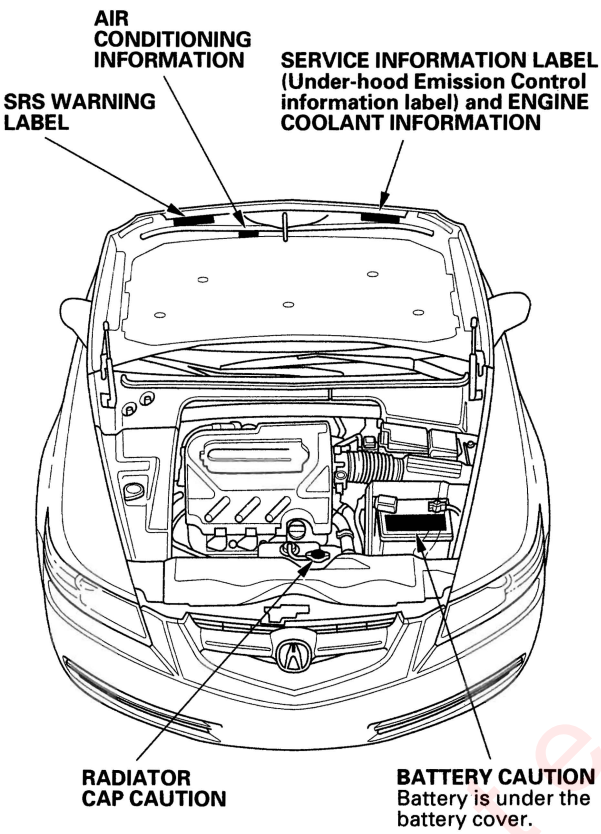

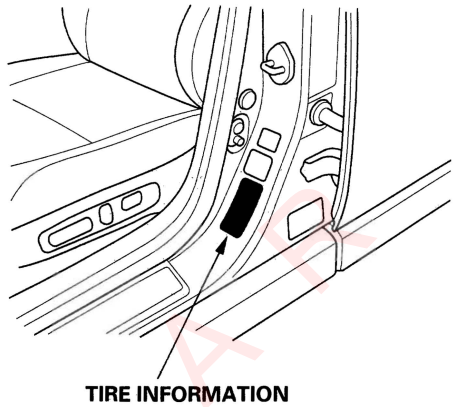

Protected by AP

Under-hood Emission Control Label

Emission Group Identification

Example:

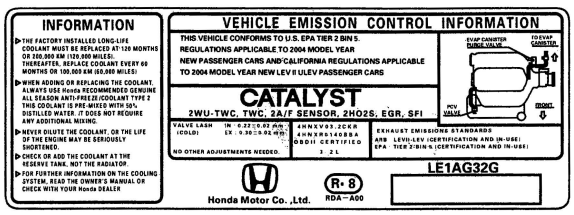

THIS VEHICLE CONFORMS TO U.S. EPA TIER 2 BIN 5. REGULATIONS APPLICABLE TO 2004 MODEL YEAR NEW PASSENGER CARS AND CALIFORNIA REGULATIONS APPLICABLE TO 2004 MODEL YEAR NEW LEV II ULEV PASSENGER CARS.

Engine and Evaporative Families:

Engine Family:

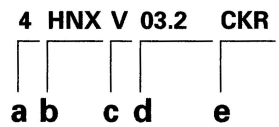

- **a. Model Year**
  4: 2004
- **b. Manufacturer Subcode**
  HNX: HONDA
- **c. Family Type**
  V: LDV
- **d. Displacement**
- **e. Sequence Characters**

Evaporative Family:

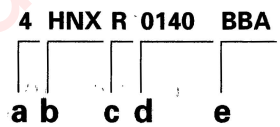

- **a. Model Year**
  4: 2004
- **b. Manufacturer Subcode**
  HNX: HONDA
- **c. Family Type**
  R: EVAP/ORVR
- **d. Canister Work Capacity**
- **e. Sequence Characters**

Protected by AR

Lift and Support Points

NOTE: If you are going to remove heavy components such as suspension or the fuel tank from the rear of the vehicle, first support the front of the vehicle with tall safety stands. When substantial weight is removed from the rear of the vehicle, the center of gravity can change and cause the vehicle to tip forward on the hoist.

Frame Hoist

1. Position the hoist lift blocks (A), or safety stands, under the vehicle's front support points (B) and rear support points (C).

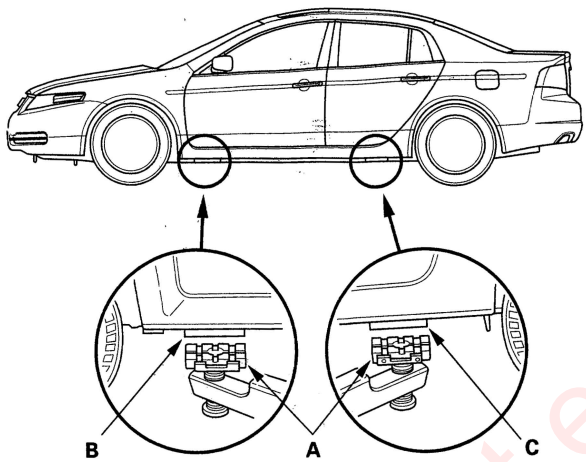

2. Raise the hoist a few inches, and rock the vehicle gently to be sure it is firmly supported.

3. Raise the hoist to full height, and inspect the lift points for solid contact with the lift blocks.

Safety Stands

To support the vehicle on safety stands, use the same support points (B and C) as for a frame hoist. Always use safety stands when working on or under any vehicle that is supported only by a jack.

Floor Jack

1. When lifting the front of the vehicle, set the parking brake. When lifting the rear of the vehicle, put the gearshift lever in reverse for manual transmission, or in the P position for automatic transmission.

2. Block the wheels that are not being lifted.

3. Position the floor jack under the front jacking bracket (A) or rear jacking bracket (B). Center the jacking bracket in the jack lift platform (C) and jack up the vehicle high enough to fit the safety stands under it.

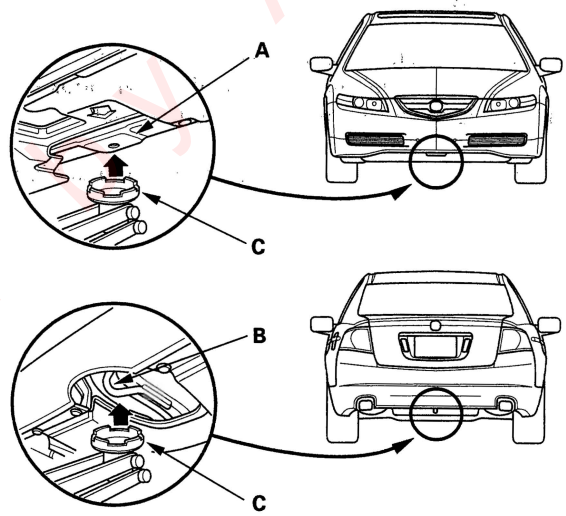

4. Position the safety stands under the support points and adjust them so the vehicle is level.

5. Lower the vehicle onto the stands.

Protected by AP

Towing

If the vehicle needs to be towed, call a professional towing service. Never tow the vehicle behind another vehicle with just a rope or chain. It is very dangerous.

Emergency Towing
There are three popular methods of towing a vehicle, two of which are recommended and one that is not.

Flat-bed Equipment — The operator loads the vehicle on the back of a truck. This is the best way of transporting the vehicle.

To accommodate flat-bed equipment, the vehicle is equipped with a rear towing hook (A) and rear tie down hook slots (B).

The rear towing hook can be used with a winch to pull the vehicle onto the truck, and the tie down hook slots can be used to secure the vehicle to the truck.

NOTE: The rear tie down hook slots use rubber plugs to cover the openings.

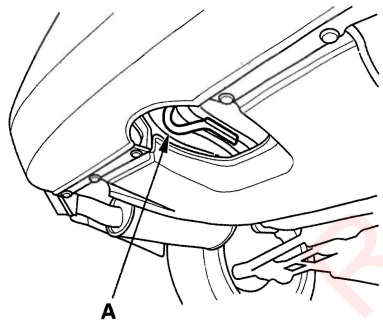

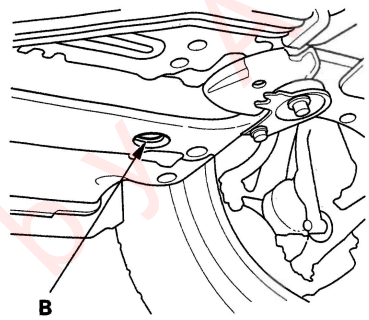

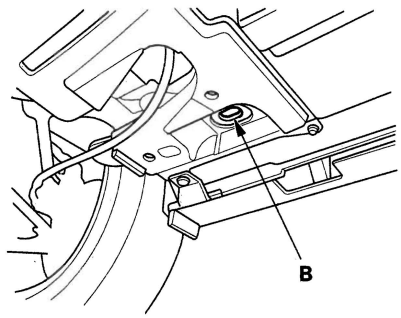

Protected by

Front Towing Hook Installation

Use the front tow hook for very short distances such as freeing the car, use the detachable towing hook that mounts on the anchor in the front bumper.

NOTICE

- To avoid damage to the vehicle use the towing hook for straight flat ground towing only. Do not tow as an angle.
- The tow hook should not be used to tow the vehicle onto a flat bed. Do not use it as a tie down.

1. Remove the cover (A) from the front bumper.

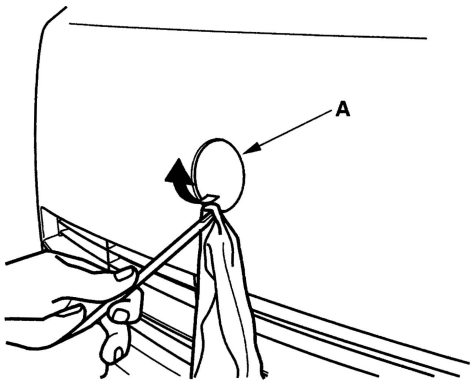

2. Remove the towing hook, hook extension, and wheel wrench from the tool case in the spare tire.

3. Using the wheel wrench, fasten the extension into the bolt hole in the anchor.

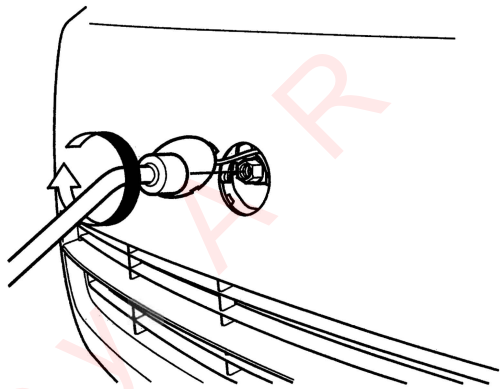

4. Screw the towing hook into the extension, and tighten it securely by hand.

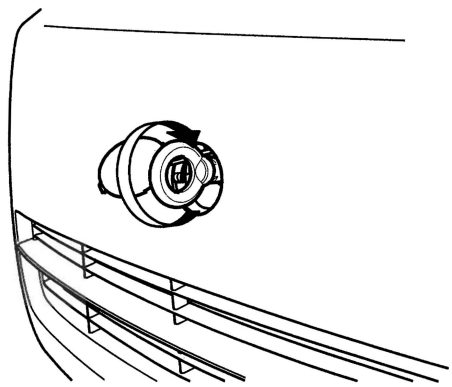

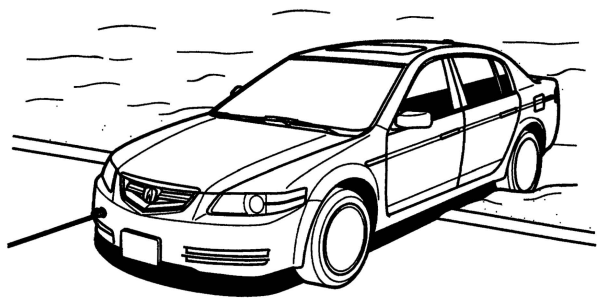

(cont'd)

Protected by AR

Towing (cont'd)

Wheel Lift Equipment — The tow truck uses two pivoting arms that go under the tires (front or rear) and lifts them off ground. The other two wheels remain on the ground. This is an acceptable way of towing the vehicle.

Sling-type Equipment — The tow truck uses metal cables with hooks on the ends. These hooks go around parts of the frame or suspension and the cables lift that end of the vehicle off the ground. The vehicle's suspension and body can be seriously damaged if this method of towing is attempted.

Do not use this method of towing.

If the vehicle cannot be transported by flat-bed, it should be towed with the front wheels off the ground. If due to damage, the vehicle must be towed with the front wheels on the ground, do the following:

Manual Transmission
- Release the parking brake.
- Shift the transmission to neutral.

Automatic Transmission
- Release the parking brake.
- Start the engine.
- Shift to the D position, then to the N position.
- Turn off the engine.

It is best to tow the vehicle no farther than 80 km (50 miles), and keep the speed below 55 km/h (35 mph).

NOTICE
- Improper towing preparations will damage the transmission. Follow the above procedure exactly. If you cannot shift the transmission or start the engine (automatic transmission), the vehicle must be transported on a flat-bed.
- Trying to lift or tow the vehicle by the bumpers will cause serious damage. The bumpers are not designed to support the vehicle's weight.

Parts Marking

To deter vehicle theft, certain major components are marked with the vehicle identification number (VIN). Original parts have self-adhesive labels. Replacement body parts have generic self-adhesive labels. The original engine or transmission VIN plate is transferred to a replacement engine or transmission and attached with break-off bolts.

NOTE: Be careful not to damage the parts marking labels during body repair. Mask the labels before repairing the part.

Protected by A P

specs

Specifications

Standards and Service Limits

Engine Electrical 2-2
Engine Assembly 2-2
Cylinder Head 2-3
Engine Block 2-4
Engine Lubrication 2-5
Cooling 2-5
Fuel and Emissions 2-6
Clutch 2-6
Manual Transmission and M/T Differential 2-7
Automatic Transmission and A/T Differential 2-10
Steering 2-17
Suspension 2-17
Brakes 2-18
Air Conditioning 2-18

Design Specifications

Dimensions 2-19
Weight 2-19
Engine 2-19
Starter 2-19
Clutch 2-19
Manual Transmission 2-19
Automatic Transmission 2-20
Steering 2-20
Suspension 2-20
Brakes 2-20
Tires 2-20
Air Conditioning 2-20
Electrical Ratings 2-21

Body Specifications

Illustrations 2-22

Protected by KR

Standards and Service Limits

Engine Electrical

Item	Measurement	Qualification	Standard or New	Service Limit
Ignition coil	Rated voltage		12 V	
	Firing order		1−4−2−5−3−6	
Spark plug	Type		NGK: IZFR6K-11 DENSO: SKJ20DR-M11	
	Gap		1.0−1.1 mm (0.039−0.043 in.)	
Ignition timing		At idle (check the *red* mark)	A/T (in N or P position): 10±2° BTDC M/T (in neutral): 10±2° BTDC	
Alternator-compressor belt	Tension adjustment		Auto tensioner	
Alternator	Output at 13.5 V and normal engine temperature		130A	
	Coil (rotor) resistance	At 68°F (20°C)	2.5 k Ω	
	Slip ring O.D.		14.4 mm (0.57 in.)	14.0 mm (0.55 in.)
	Brush length		10.5 mm (0.41 in.)	1.5 mm (0.06 in.)
	Brush spring tension		3.2 N (0.33 kgf, 0.73 lbf)	
Starter	Output		1.6 kW	
	Commutator mica depth		0.4−0.5 mm (0.016−0.020 in.)	0.15 mm (0.006 in.)
	Commutator runout		0.02 mm (0.001 in.) max.	0.05 mm (0.002 in.)
	Commutator O.D.		28.0−28.1 mm (1.102−1.106 in.)	27.5 mm (1.083 in.)
	Brush length		15.8−16.2 mm (0.62−0.64 in.)	11.0 mm (0.43 in.)
	Brush spring tension (new)		15.7−17.7 N (1.60−1.80 kgf, 3.53−3.97 lbf)	

Engine Assembly

Item	Measurement	Qualification	Standard or New	Service Limit
Compression	Pressure Check the engine with the starter cranking.	Minimum	930 kPa (9.5 kgf/cm², 135 psi)	———
		Maximum variation	200 kPa (2.0 kgf/cm², 28 psi)	———

Protected by CARR

Cylinder Head

Item	Measurement	Qualification	Standard or New	Service Limit
Head	Warpage		———	0.05 mm (0.002 in.)
	Height		120.95 – 121.05 mm (4.762 – 4.766 in.)	———
Camshaft	End play		0.05 – 0.20 mm (0.002 – 0.008 in.)	0.20 mm (0.008 in.)
	Camshaft-to-holder oil clearance		0.050 – 0.089 mm (0.0020 – 0.0035 in.)	0.15 mm (0.006 in.)
	Total runout		0.03 mm (0.001 in.) max.	0.04 mm (0.002 in.)
	Cam lobe height	Intake, primary	35.041 mm (1.3796 in.)	———
		Intake, mid	36.445 mm (1.4348 in.)	———
		Intake, secondary	35.284 mm (1.3891 in.)	———
		Exhaust	36.326 mm (1.4302 in.)	———
Valve	Clearance (cold)	Intake	0.20 – 0.24 mm (0.008 – 0.009 in.)	———
		Exhaust	0.28 – 0.32 mm (0.011 – 0.013 in.)	———
	Stem O.D.	Intake	5.485 – 5.495 mm (0.2159 – 0.2163 in.)	5.455 mm (0.2148 in.)
		Exhaust	5.450 – 5.460 mm (0.2146 – 0.2150 in.)	5.420 mm (0.2134 in.)
	Stem-to-guide clearance	Intake	0.020 – 0.045 mm (0.0008 – 0.0018 in.)	0.08 mm (0.003 in.)
		Exhaust	0.055 – 0.080 mm (0.0022 – 0.0031 in.)	0.11 mm (0.004 in.)
Valve seat	Width	Intake	1.25 – 1.55 mm (0.049 – 0.061 in.)	2.00 mm (0.079 in.)
		Exhaust	1.25 – 1.55 mm (0.049 – 0.061 in.)	2.00 mm (0.079 in.)
	Stem installed height	Intake	46.75 – 47.55 mm (1.841 – 1.872 in.)	47.80 mm (1.882 in.)
		Exhaust	46.68 – 47.48 mm (1.838 – 1.869 in.)	47.73 mm (1.879 in.)
Valve spring	Free length	Intake	51.54 mm (2.029 in.)	———
		Exhaust	51.06 mm (2.010 in.)	———
Valve guide	I.D.	Intake	5.515 – 5.530 mm (0.2171 – 0.2177 in.)	5.55 mm (0.219 in.)
		Exhaust	5.515 – 5.530 mm (0.2171 – 0.2177 in.)	5.55 mm (0.219 in.)
	Installed height	Intake	21.20 – 22.20 mm (0.835 – 0.874 in.)	———
		Exhaust	20.60 – 21.60 mm (0.811 – 0.850 in.)	———
Rocker arm	Arm-to-shaft clearance	Intake	0.026 – 0.067 mm (0.0010 – 0.0026 in.)	0.067 mm (0.0026 in.)
		Exhaust	0.026 – 0.077 mm (0.0010 – 0.0030 in.)	0.077 mm (0.0030 in.)

Protected by DMCA

Standards and Service Limits

Engine Block

Item	Measurement	Qualification	Standard or New	Service Limit
Block	Warpage of deck		0.07 mm (0.003 in.) max.	0.10 mm (0.004 in.)
	Bore diameter		89.000−89.015 mm (3.5039−3.5045 in.)	89.065 mm (3.5065 in.)
	Bore taper		———	0.05 mm (0.002 in.)
	Reboring limit		———	0.25 mm (0.01 in.)
Piston	Skirt O.D. at 16.0 mm (0.63 in.) from bottom of skirt		88.975−88.985 mm (3.5029−3.5033 in.)	88.965 mm (3.5026 in.)
	Clearance in cylinder		0.015−0.040 mm (0.0006−0.0016 in.)	0.08 mm (0.003 in.)
	Ring groove width	Top	1.240−1.250 mm (0.0488−0.0492 in.)	1.27 mm (0.050 in.)
		Second	1.220−1.230 mm (0.0480−0.0484 in.)	1.25 mm (0.049 in.)
		Oil	2.805−2.825 mm (0.1104−0.1112 in.)	2.85 mm (0.112 in.)
Piston ring	Ring-to-groove clearance	Top	0.055−0.080 mm (0.0022−0.0031 in.)	0.15 mm (0.006 in.)
		Second	0.030−0.055 mm (0.0012−0.0022 in.)	0.13 mm (0.005 in.)
	Ring end gap	Top	0.20−0.35 mm (0.008−0.014 in.)	0.60 mm (0.024 in.)
		Second	0.40−0.55 mm (0.016−0.022 in.)	0.70 mm (0.028 in.)
		Oil	0.20−0.70 mm (0.008−0.028 in.)	0.80 mm (0.031 in.)
Piston pin	O.D.		21.962−21.965 mm (0.8646−0.8648 in.)	21.954 mm (0.8643 in.)
	Pin-to-piston clearance		−0.0050 to +0.0010 mm (−0.00020 to +0.00004 in.)	0.004 mm (0.0002 in.)
Connecting rod	Pin-to-rod clearance		0.005−0.014 mm (0.0002−0.0006 in.)	0.019 mm (0.0007 in.)
	Small-end bore diameter		21.970−21.976 mm (0.8650−0.8652 in.)	———
	Large-end bore diameter	Nominal	58.0 mm (2.28 in.)	———
	End play installed on crankshaft		0.15−0.35 mm (0.006−0.014 in.)	0.45 mm (0.018 in.)
Crankshaft	Main journal diameter		71.976−72.000 mm (2.8337−2.8346 in.)	———
	Rod journal diameter		54.976−55.000 mm (2.1644−2.1654 in.)	———
	Rod/main journal taper		0.005 mm (0.0002 in.) max.	0.010 mm (0.0004 in.)
	Rod/main journal out-of-round		0.005 mm (0.0002 in.) max.	0.010 mm (0.0004 in.)
	End play		0.10−0.35 mm (0.004−0.014 in.)	0.45 mm (0.018 in.)
	Runout		0.025 mm (0.0010 in.) max.	0.03 mm (0.0012 in.)
Crankshaft bearing	Main bearing-to-journal oil clearance		0.020−0.044 mm (0.0008−0.0017 in.)	0.050 mm (0.0020 in.)
	Rod bearing clearance		0.020−0.044 mm (0.0008−0.0017 in.)	0.050 mm (0.002 in.)

Protected with

Engine Lubrication

Item	Measurement	Qualification	Standard or New	Service Limit
Engine oil	Capacity	Engine overhaul	5.0 ℓ (5.3 US qt)	
		Oil change, including filter	4.3 ℓ (4.5 US qt)	
		Oil change, without filter	4.0 ℓ (4.2 US qt)	
Oil pump	Inner-to-outer rotor clearance		0.04–0.16 mm (0.002–0.006 in.)	0.20 mm (0.008 in.)
	Pump housing-to-outer rotor clearance		0.10–0.19 mm (0.004–0.007 in.)	0.20 mm (0.008 in.)
	Pump housing-to-outer rotor axial clearance		0.02–0.07 mm (0.001–0.003 in.)	0.12 mm (0.005 in.)
	Oil pressure with oil temperature at 176°F (80°C)	At idle	70 kPa (0.7 kgf/cm², 10 psi)	
		At 3,000 rpm	490 kPa (5.0 kgf/cm², 71 psi)	

Cooling

Item	Measurement	Qualification	Standard or New
Radiator	Coolant capacity (includes engine, heater, hoses, and reservoir)	Engine overhaul	A/T model: 8.1 ℓ (8.6 US qt)
			M/T model: 7.9 ℓ (8.3 US qt)
		Coolant change	A/T model: 6.4 ℓ (6.8 US qt)
			M/T model: 6.3 ℓ (6.7 US qt)
Reservoir	Coolant capacity		0.6 ℓ (0.6 US qt)
Radiator cap	Opening pressure		93–123 kPa (0.95–1.25 kgf/cm², 14–18 psi)
Thermostat	Opening temperature	Begins to open	169–176°F (76–80°C)
		Fully open	194°F (90°C)
	Valve lift at fully open		10.0 mm (0.39 in.) min.

Protected by CARR

Standards and Service Limits

Fuel and Emissions

Item	Measurement	Qualification	Standard or New
Fuel pressure regulator	Pressure		400 – 450 kPa (4.0 – 4.5 kg/cm², 56 – 64 psi)
Fuel tank	Capacity		64.7 ℓ (17.1 US gal)
Engine idle	Idle speed without load	M/T in neutral A/T in N or P position	750 ± 50 rpm
	Idle speed with high electric load (with HVAC on)	M/T in neutral A/T in N or P position	750 ± 50 rpm

Clutch

Item	Measurement	Qualification	Standard or New	Service Limit
Clutch pedal	Height from floor		191 mm (7.52 in.)	———
	Stroke		130 – 140 mm (5.12 – 5.51 in.)	———
	Play		10 – 18 mm (0.39 – 0.71 in.)	———
	Disengagement height from floor		90.5 mm (3.56 in.) min.	———
Flywheel	Runout on clutch mating surface		0.05 mm (0.002 in.) max.	0.15 mm (0.006 in.)
Clutch disc	Rivet head depth		1.0 mm (0.039 in.)	0.2 mm (0.008 in.)
	Thickness		8.68 – 9.53 mm (0.342 – 0.375 in.)	7.2 mm (0.28 in.)
Pressure plate	Warpage		0.03 mm (0.001 in.) max.	0.15 mm (0.006 in.)
	Height of diaphragm spring fingers measured with special tool and feeler gauge		0.6 mm (0.02 in.) max.	0.8 mm (0.03 in.)

Protected by AR

Manual Transmission and M/T Differential

Item	Measurement	Qualification	Standard or New	Service Limit
Transmission fluid	Capacity	Fluid change	2.2 ℓ (2.3 US qt)	
	Use Honda MTF	Overhaul	2.5 ℓ (2.6 US qt)	
Mainshaft	End play		0.14–0.21 mm (0.006–0.008 in.)	Adjust
	Diameter of pilot bearing surface		19.967–19.980 mm (0.7861–0.7866 in.)	19.91 mm (0.784 in.)
	Diameter of 4th and 5th gears distance collar		35.987–36.000 mm (1.4168–1.4173 in.)	35.93 mm (1.415 in.)
	Diameter of ball bearing contact area (clutch housing side)		28.002–28.015 mm (1.1024–1.1030 in.)	27.95 mm (1.100 in.)
	Diameter of needle bearing contact area		41.984–42.000 mm (1.6529–1.6535 in.)	41.93 mm (1.651 in.)
	Diameter of 6th gear distance collar		32.987–33.000 mm (1.2987–1.2992 in.)	32.93 mm (1.296 in.)
	Diameter of ball bearing contact area (transmission housing side)		30.987–31.000 mm (1.2200–1.2205 in.)	30.93 mm (1.218 in.)
	Runout		0.02 mm (0.001 in.) max.	0.05 mm (0.002 in.)
Mainshaft 3rd gear	I.D.		47.009–47.025 mm (1.8507–1.8514 in.)	47.08 mm (1.854 in.)
	End play		0.06–0.19 mm (0.002–0.007 in.)	0.3 mm (0.01 in.)
	Thickness		23.89–23.97 mm (0.941–0.944 in.)	23.8 mm (0.94 in.)
Mainshaft 4th and 5th gears	I.D.		47.009–47.025 mm (1.8507–1.8514 in.)	47.08 mm (1.854 in.)
	End play		0.06–0.19 mm (0.002–0.007 in.)	0.3 mm (0.01 in.)
	Thickness		22.39–22.47 mm (0.881–0.885 in.)	22.3 mm (0.88 in.)
Mainshaft 6th gear	I.D.		44.009–44.025 mm (1.7326–1.7333 in.)	44.08 mm (1.735 in.)
	End play		0.06–0.19 mm (0.002–0.007 in.)	0.3 mm (0.01 in.)
	Thickness		21.89–21.97 mm (0.862–0.865 in.)	21.8 mm (0.86 in.)
Countershaft	Diameter of needle bearing contact area (clutch housing side)		43.974–43.990 mm (1.7313–1.7319 in.)	43.92 mm (1.729 in.)
	Diameter of distance collar contact area		42.975–42.991 mm (1.6919–1.6926 in.)	42.92 mm (1.690 in.)
	Diameter of ball bearing contact area (transmission housing side)		30.002–30.015 mm (1.1812–1.1817 in.)	29.95 mm (1.179 in.)
	Diameter of countershaft reverse gear		45.934–45.950 mm (1.8084–1.8091 in.)	45.88 mm (1.806 in.)
	Runout		0.02 mm (0.001 in.) max.	0.05 mm (0.002 in.)
	35 mm shim-to-bearing inner race clearance		0.04–0.10 mm (0.0016–0.0039 in.)	Adjust
Countershaft 1st gear	I.D.		57.010–57.029 mm (2.2445–2.2452 in.)	57.08 mm (2.247 in.)
	End play		0.04–0.17 mm (0.002–0.007 in.)	0.28 mm (0.011 in.)
	Thickness		22.91–22.99 mm (0.902–0.905 in.)	22.86 mm (0.900 in.)
Countershaft 2nd gear	I.D.		57.010–57.029 mm (2.2445–2.2452 in.)	57.08 mm (2.247 in.)
	End play		0.04–0.17 mm (0.002–0.007 in.)	0.28 mm (0.011 in.)
	Thickness		22.91–22.99 mm (0.902–0.905 in.)	22.86 mm (0.900 in.)
Countershaft reverse gear	I.D.		45.970–45.988 mm (1.8098–1.8105 in.)	46.04 mm (1.813 in.)
	O.D.		51.987–52.000 mm (2.0467–2.0472 in.)	51.93 mm (2.044 in.)
	Length		23.03–23.08 mm (0.907–0.909 in.)	———
Countershaft 2nd gear distance collar	I.D.		42.990–43.000 mm (1.6925–1.6929 in.)	43.05 mm (1.695 in.)
	O.D.		51.989–52.000 mm (2.0468–2.0472 in.)	51.94 mm (2.045 in.)
	Length		23.03–23.08 mm (0.907–0.909 in.)	———

(cont'd)

Standards and Service Limits

Manual Transmission and M/T Differential (cont'd)

Item	Measurement	Qualification	Standard or New	Service Limit
Mainshaft 4th and 5th gears distance collar	I.D.		36.002–36.012 mm (1.4174–1.4178 in.)	36.06 mm (1.420 in.)
	O.D.		41.989–42.000 mm (1.6531–1.6535 in.)	41.94 mm (1.651 in.)
	Length 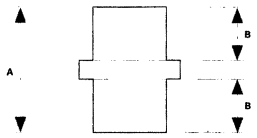	A	49.95–50.05 mm (1.967–1.970 in.)	———
		B	22.53–22.58 mm (0.887–0.889 in.)	———
Mainshaft 6th gear distance collar	I.D.		33.002–33.012 mm (1.2993–1.2997 in.)	33.06 mm (1.302 in.)
	O.D.		38.989–39.000 mm (1.5350–1.5354 in.)	38.94 mm (1.533 in.)
	Length		22.03–22.08 mm (0.867–0.869 in.)	———
Reverse gear shaft	O.D.		19.989–20.000 mm (0.7870–0.7874 in.)	19.93 mm (0.785 in.)
Reverse drive/ driven gear	I.D.		25.007–25.020 mm (0.9845–0.9850 in.)	25.07 mm (0.987 in.)
5th synchro ring	Ring-to-gear clearance	Ring pushed against gear	0.70–1.49 mm (0.028–0.059 in.)	0.4 mm (0.016 in.)
6th synchro ring	Ring-to-gear clearance	Ring pushed against gear	0.73–1.44 mm (0.029–0.057 in.)	0.4 mm (0.016 in.)
Double cone synchro	Outer synchro ring-to-synchro cone clearance	Ring pushed against gear	0.70–1.19 mm (0.028–0.047 in.)	0.3 mm (0.012 in.)
	Synchro cone-to-gear clearance	Ring pushed against gear	0.50–1.04 mm (0.020–0.041 in.)	0.3 mm (0.012 in.)
	Outer synchro ring-to-gear cone clearance	Ring pushed against gear	0.95–1.68 mm (0.037–0.066 in.)	0.6 mm (0.024 in.)
1st triple cone synchro	Outer synchro ring-to-synchro cone clearance	Ring pushed against gear	0.70–1.19 mm (0.028–0.047 in.)	0.3 mm (0.012 in.)
	Synchro cone-to-gear clearance	Ring pushed against gear	0.45–1.14 mm (0.018–0.045 in.)	0.3 mm (0.012 in.)
	Outer synchro ring-to-gear cone clearance	Ring pushed against gear	1.12–1.68 mm (0.044–0.066 in.)	0.6 mm (0.024 in.)
2nd triple cone synchro	Outer synchro ring-to-synchro cone clearance	Ring pushed against gear	0.70–1.19 mm (0.028–0.047 in.)	0.3 mm (0.012 in.)
	Synchro cone-to-gear clearance	Ring pushed against gear	0.60–1.88 mm (0.024–0.074 in.)	0.3 mm (0.012 in.)
	Outer synchro ring-to-gear cone clearance	Ring pushed against gear	0.87–1.82 mm (0.034–0.072 in.)	0.6 mm (0.024 in.)
1st/2nd, 3rd/4th, 5th/6th Shift fork	Finger thickness		7.4–7.6 mm (0.29–0.30 in.)	———
	Fork-to-synchro sleeve clearance		0.35–0.65 mm (0.014–0.026 in.)	1.0 mm (0.039 in.)
Reverse shift fork	Finger thickness		6.2–6.4 mm (0.24–0.25 in.)	———
	Fork-to-synchro sleeve clearance		0.35–0.65 mm (0.014–0.026 in.)	1.0 mm (0.039 in.)
Reverse shift lever	Finger thickness		6.400–6.650 mm (0.2520–0.2618 in.)	———
	Shift lever-to-shift fork clearance		0.05–0.50 mm (0.002–0.020 in.)	0.6 mm (0.024 in.)
	Shift lever diameter at contact area		13.0–13.2 mm (0.51–0.52 in.)	———
	Shift lever-to-interlock clearance		0–0.4 mm (0–0.015 in.)	0.5 mm (0.020 in.)
Shift piece	I.D.		14.000–14.068 mm (0.5512–0.5539 in.)	———
	Shift fork diameter at contact area		12.9–13.0 mm (0.50–0.51 in.)	———
	Shift piece-to-shift fork clearance		0.2–0.6 mm (0.008–0.024 in.)	0.7 mm (0.028 in.)

Protected by AR

Item	Measurement	Qualification	Standard or New	Service Limit
Shift arm	I.D.		15.973 – 16.005 mm (0.6289 – 0.6301 in.)	———
	Shift piece diameter at contact area		13.9 – 14.0 mm (0.54 – 0.55 in.)	———
	Shift arm-to-shift piece clearance		0.05 – 0.25 mm (0.002 – 0.010 in.)	0.5 mm (0.020 in.)
Select arm	I.D.		11.01 – 11.05 mm (0.433 – 0.435 in.)	———
	Interlock diameter at contact area		12.9 – 13.0 mm (0.50 – 0.51 in.)	———
	Select arm-to-interlock clearance		0.05 – 0.25 mm (0.002 – 0.010 in.)	0.5 mm (0.020 in.)
Oil pump	Oil pump thrust clearance		0.03 – 0.13 mm (0.001 – 0.005 in.)	0.15 mm (0.006 in.)
	Outer rotor-to-body clearance		0.1 – 0.2 mm (0.004 – 0.008 in.)	0.22 mm (0.009 in.)
	Inner rotor-to-outer rotor clearance		0.14 mm (0.006 in.) max.	0.2 mm (0.008 in.)
	Oil pump inner rotor I.D.		17.1 – 17.2 mm (0.067 – 0.68 in.)	———
	Oil pump shaft O.D.		16.8 – 17.0 mm (0.66 – 0.67 in.)	———
M/T differential carrier	Backlash		0.4 – 1.3 mm (0.016 – 0.051 in.)	———
	Driveshaft contact area I.D.		30.025 – 30.045 mm (1.1821 – 1.1829 in.)	———
	Carrier bearing starting torque (preload)		3.43 – 4.51 N·m (35 – 46 kgf·cm, 30 – 40 lbf·in.)	Adjust

Protected by APR

Standards and Service Limits

Automatic Transmission and A/T Differential

Item	Measurement	Qualification	Standard or New	Service Limit
ATF (Automatic Transmission Fluid)	Capacity Use Honda ATF-Z1	Fluid change	3.0 ℓ (3.2 US qt)	
		Overhaul	7.0 ℓ (7.4 US qt)	
ATF pressure	Line pressure	At 2,000 rpm in N or P position	900–960 kPa (9.2–9.8 kgf/cm², 130–140 psi)	850 kPa (8.7 kgf/cm², 120 psi)
	5th clutch pressure	At 2,000 rpm in M position	890–970 kPa (9.1–9.9 kgf/cm², 130–140 psi)	840 kPa (8.6 kgf/cm², 120 psi)
	4th clutch pressure	At 2,000 rpm in M position	890–970 kPa (9.1–9.9 kgf/cm², 130–140 psi)	840 kPa (8.6 kgf/cm², 120 psi)
	3rd clutch pressure	At 2,000 rpm in M position	890–970 kPa (9.1–9.9 kgf/cm², 130–140 psi)	840 kPa (8.6 kgf/cm², 120 psi)
	2nd clutch pressure	At 2,000 rpm in M position	890–970 kPa (9.1–9.9 kgf/cm², 130–140 psi)	840 kPa (8.6 kgf/cm², 120 psi)
	1st clutch pressure	At 2,000 rpm in M position	890–970 kPa (9.1–9.9 kgf/cm², 130–140 psi)	840 kPa (8.6 kgf/cm², 120 psi)
	1st-hold clutch pressure	At 2,000 rpm in L position	760–830 kPa (7.7–8.5 kgf/cm², 110–120 psi)	710 kPa (7.2 kgf/cm², 100 psi)
Torque converter	Stall speed Check with vehicle on level ground		2,000 rpm	1,850–2,150 rpm
Clutch	Clutch end-plate-to-top-disc clearance	1st	———	1.1–1.3 mm (0.043–0.051 in.)
		2nd	———	0.85–1.05 mm (0.033–0.041 in.)
		3rd	———	0.7–0.9 mm (0.028–0.035 in.)
		4th, 5th	———	0.55–0.75 mm (0.022–0.030 in.)
		1st-hold	———	0.5–0.9 mm (0.020–0.035 in.)
	Clutch return spring free length	1st	68.3 mm (2.69 in.)	66.3 mm (2.61 in.)
		2nd	53.4 mm (2.10 in.)	51.4 mm (2.02 in.)
		3rd	52.0 mm (2.05 in.)	50.0 mm (1.97 in.)
		4th	33.5 mm (1.32 in.)	31.5 mm (1.24 in.)
		5th	37.4 mm (1.47 in.)	35.4 mm (1.39 in.)
	Clutch disc thickness		1.94 mm (0.076 in.)	———
	Clutch plate thickness	1st, 2nd	1.6 mm (0.063 in.)	When discolored
		3rd, 4th	2.3 mm (0.091 in.)	When discolored
		5th	2.0 mm (0.079 in.)	When discolored
		1st-hold	1.8 mm (0.071 in.)	When discolored
	1st clutch end plate thickness	Mark 1	3.10 mm (0.122 in.)	When discolored
		Mark 2	3.20 mm (0.126 in.)	When discolored
		Mark 3	3.30 mm (0.130 in.)	When discolored
		Mark 4	3.40 mm (0.134 in.)	When discolored
		Mark 5	3.50 mm (0.138 in.)	When discolored
		Mark 6	3.60 mm (0.142 in.)	When discolored
		Mark 7	3.70 mm (0.146 in.)	When discolored
		Mark 8	3.80 mm (0.150 in.)	When discolored
		Mark 9	3.90 mm (0.154 in.)	When discolored
	1st-hold clutch end plate thickness		5.00 mm (0.197 in.)	When discolored

Protected by ARK

Item	Measurement	Qualification	Standard or New	Service Limit
Clutch	2nd clutch end plate thickness	Mark 1	2.10 mm (0.083 in.)	When discolored
		Mark 2	2.20 mm (0.087 in.)	When discolored
		Mark 3	2.30 mm (0.091 in.)	When discolored
		Mark 4	2.40 mm (0.094 in.)	When discolored
		Mark 5	2.50 mm (0.098 in.)	When discolored
		Mark 6	2.60 mm (0.102 in.)	When discolored
		Mark 7	2.70 mm (0.106 in.)	When discolored
		Mark 8	2.80 mm (0.110 in.)	When discolored
		Mark 9	2.90 mm (0.114 in.)	When discolored
	3rd clutch end plate thickness	Mark 1	2.10 mm (0.083 in.)	When discolored
		Mark 2	2.20 mm (0.087 in.)	When discolored
		Mark 3	2.30 mm (0.091 in.)	When discolored
		Mark 4	2.40 mm (0.094 in.)	When discolored
		Mark 5	2.50 mm (0.098 in.)	When discolored
		Mark 6	2.60 mm (0.102 in.)	When discolored
		Mark 7	2.70 mm (0.106 in.)	When discolored
		Mark 8	2.80 mm (0.110 in.)	When discolored
		Mark 9	2.90 mm (0.114 in.)	When discolored
		Mark 10	3.00 mm (0.118 in.)	When discolored
		Mark 11	3.10 mm (0.122 in.)	When discolored
	4th and 5th clutch end plate thickness	Mark 1	2.10 mm (0.083 in.)	When discolored
		Mark 2	2.20 mm (0.087 in.)	When discolored
		Mark 3	2.30 mm (0.091 in.)	When discolored
		Mark 4	2.40 mm (0.094 in.)	When discolored
		Mark 5	2.50 mm (0.098 in.)	When discolored
		Mark 6	2.60 mm (0.102 in.)	When discolored
		Mark 7	2.70 mm (0.106 in.)	When discolored
		Mark 8	2.80 mm (0.110 in.)	When discolored
		Mark 9	2.90 mm (0.114 in.)	When discolored
ATF pump	Stator shaft needle bearing contact I.D.	Torque converter side	27.000 – 27.021 mm (1.0630 – 1.0638 in.)	When worn or damaged
		ATF pump side	29.000 – 29.021 mm (1.1417 – 1.1426 in.)	When worn or damaged
	ATF pump gear thrust clearance		0.03 – 0.06 mm (0.001 – 0.002 in.)	0.07 mm (0.003 in.)
	ATF pump gear-to-body clearance	Drive gear	0.210 – 0.265 mm (0.0083 – 0.0104 in.)	———
		Driven gear	0.070 – 0.125 mm (0.0028 – 0.0049 in.)	———
	ATF pump driven gear I.D.		14.016 – 14.034 mm (0.5518 – 0.5525 in.)	When worn or damaged
	ATF pump driven gear shaft O.D.		13.980 – 13.990 mm (0.5504 – 0.5508 in.)	When worn or damaged
Reverse shift fork	Fork finger thickness		5.90 – 6.00 mm (0.232 – 0.236 in.)	5.40 mm (0.213 in.)
Park gear and pawl			———	When worn or damaged
Servo body	Shift fork shaft bore I.D.		14.000 – 14.010 mm (0.5512 – 0.5516 in.)	———
	Shift fork shaft valve bore I.D.		37.000 – 37.039 mm (1.4567 – 1.4582 in.)	37.045 mm (1.4585 in.)
Regulator valve body	Sealing ring contact I.D.		32.000 – 32.025 mm (1.2598 – 1.2608 in.)	32.050 mm (1.2618 in.)
Accumulator body	Sealing ring contact I.D.		35.000 – 35.025 mm (1.3780 – 1.3789 in.)	35.05 mm (1.3799 in.)
Stator shaft	Sealing ring contact I.D.		29.000 – 29.021 mm (1.1417 – 1.1426 in.)	29.050 mm (1.1437 in.)

(cont'd)

Automatic Transmission and A/T Differential (cont'd)

Item	Measurement	Qualification	Standard or New	Service Limit
Mainshaft	Diameter of needle bearing contact area	At stator shaft	22.984–23.000 mm (0.9049–0.9055 in.)	When worn or damaged
		At 4th gear	52.975–52.991 mm (2.0856–2.0863 in.)	When worn or damaged
		At 5th gear collar	33.975–33.991 mm (1.3376–1.3382 in.)	When worn or damaged
	I.D. of 4th gear		59.000–59.019 mm (2.3228–2.3236 in.)	When worn or damaged
	I.D. of 5th gear		40.000–40.016 mm (1.5748–1.5754 in.)	When worn or damaged
	End play of 4th gear		0.03–0.31 mm (0.001–0.012 in.)	———
	End play of 5th gear		0.10–0.22 mm (0.004–0.009 in.)	———
	41 x 73 mm thrust shim thickness	No. 1	7.85 mm (0.309 in.)	When worn or damaged
		No. 2	7.90 mm (0.311 in.)	When worn or damaged
		No. 3	7.95 mm (0.313 in.)	When worn or damaged
		No. 4	8.00 mm (0.315 in.)	When worn or damaged
		No. 5	8.05 mm (0.317 in.)	When worn or damaged
		No. 6	8.10 mm (0.319 in.)	When worn or damaged
	Thrust washer thickness	27 x 47 x 5 mm	5.00 mm (0.197 in.)	When worn or damaged
	Length of 5th gear collar		58.5–58.6 mm (2.303–2.307 in.)	———
	5th gear collar flange thickness		4.45–4.60 mm (0.175–0.181 in.)	When worn or damaged
	Sealing ring thickness	32 mm sealing ring	1.87–1.97 mm (0.074–0.078 in.)	1.800 mm (0.071 in.)
		29 mm sealing ring	1.87–1.97 mm (0.074–0.078 in.)	1.800 mm (0.071 in.)
	Width of sealing ring groove		2.025–2.060 mm (0.080–0.081 in.)	2.080 mm (0.082 in.)
	Clutch feed pipe O.D.	4th clutch	5.97–5.98 mm (0.2350–0.2354 in.)	5.95 mm (0.2343 in.)
		5th clutch	11.47–11.48 mm (0.4516–0.4520 in.)	11.45 mm (0.4508 in.)
	Clutch feed pipe bushing I.D.	4th clutch	6.018–6.030 mm (0.2369–0.2374 in.)	6.045 mm (0.2380 in.)
		5th clutch	11.500–11.518 mm (0.4528–0.4535 in.)	11.530 mm (0.4539 in.)

Protected by A

Item	Measurement	Qualification	Standard or New	Service Limit
Countershaft	Diameter of needle bearing contact area	At 5th gear	34.975–34.991 mm (1.3770–1.3776 in.)	When worn or damaged
		At 2nd gear	39.979–40.000 mm (1.574–1.575 in.)	When worn or damaged
		At park gear	41.964–41.980 mm (1.6521–1.6528 in.)	When worn or damaged
		At right end	38.505–38.515 mm (1.5159–1.5163 in.)	When worn or damaged
	I.D. of 5th gear		41.000–41.016 mm (1.6142–1.6148 in.)	When worn or damaged
	I.D. of 3rd gear		50.000–50.016 mm (1.9685–1.9691 in.)	When worn or damaged
	I.D. of reverse gear		46.000–46.016 mm (1.8110–1.8116 in.)	When worn or damaged
	End play of 1st gear		0.00–0.33 mm (0.000–0.013 in.)	———
	End play of 5th gear		0.04–0.27 mm (0.002–0.011 in.)	———
	End play of 3rd gear		0.015–0.045 mm (0.0006–0.0018 in.)	———
	End play of reverse gear		0.10–0.25 mm (0.004–0.010 in.)	———
	31 x 63.5 x 8.5 mm splined washer difference	A	3.503–3.515 mm (0.1379–0.1384 in.)	When worn or damaged
		B	3.490–3.502 mm (0.1374–0.1379 in.)	When worn or damaged
		C	3.477–3.489 mm (0.1369–0.1374 in.)	When worn or damaged
		D	3.464–3.476 mm (0.1364–0.1369 in.)	When worn or damaged
	Length of distance collar	35 x 47 x 45.6 mm	45.56–45.60 mm (1.794–1.795 in.)	———
		35 x 47 x 7.8 mm	5.92–5.96 mm (0.233–0.235 in.)	———
	Cotter thickness		1.99–2.02 mm (0.078–0.080 in.)	———
	Reverse selector hub O.D.		55.87–55.90 mm (2.1996–2.2008 in.)	When worn or damaged
	Clutch feed pipe O.D.		8.97–8.98 mm (0.353–0.354 in.)	8.95 mm (0.352 in.)
	Clutch feed pipe bushing I.D.		9.000–9.015 mm (0.354–0.355 in.)	9.030 mm (0.356 in.)

Protected

(cont'd)

Standards and Service Limits

Automatic Transmission and A/T Differential (cont'd)

Item	Measurement	Qualification	Standard or New	Service Limit
Secondary shaft	Diameter of needle bearing contact area	At 1st gear	37.978–37.993 mm (1.4951–1.4958 in.)	When worn or damaged
		At 2nd gear	33.986–33.999 mm (1.3380–1.3385 in.)	When worn or damaged
	I.D. of 1st gear		44.000–44.016 mm (1.7323–1.7329 in.)	When worn or damaged
	I.D. of 2nd gear		40.000–40.016 mm (1.5748–1.5754 in.)	When worn or damaged
	End play of 1st gear		0.07–0.15 mm (0.003–0.006 in.)	———
	End play of 2nd gear		0.04–0.12 mm (0.002–0.005 in.)	———
	38 x 56.5 mm splined washer thickness	No. 1	6.85 mm (0.270 in.)	When worn or damaged
		No. 2	6.90 mm (0.272 in.)	When worn or damaged
		No. 3	6.95 mm (0.274 in.)	When worn or damaged
		No. 4	7.00 mm (0.276 in.)	When worn or damaged
		No. 5	7.05 mm (0.278 in.)	When worn or damaged
		No. 6	7.10 mm (0.280 in.)	When worn or damaged
	37 x 55 mm thrust shim thickness	No. 1	4.90 mm (0.193 in.)	When worn or damaged
		No. 2	4.95 mm (0.195 in.)	When worn or damaged
		No. 3	5.00 mm (0.197 in.)	When worn or damaged
		No. 4	5.05 mm (0.199 in.)	When worn or damaged
		No. 5	5.10 mm (0.201 in.)	When worn or damaged
		No. 6	5.15 mm (0.203 in.)	When worn or damaged
		No. 7	5.20 mm (0.205 in.)	When worn or damaged
	Cotter thickness		1.99–2.02 mm (0.078–0.080 in.)	———
	Sealing ring thickness		1.890–1.950 mm (0.074–0.077 in.)	1.800 mm (0.071 in.)
	Width of sealing ring groove		2.025–2.060 mm (0.080–0.081 in.)	2.080 mm (0.082 in.)
	Clutch feed pipe O.D.		7.97–7.98 mm (0.3138–0.3142 in.)	7.95 mm (0.3130 in.)
	Clutch feed pipe bushing I.D.		8.000–8.015 mm (0.3150–0.3156 in.)	8.030 mm (0.3161 in.)
Reverse idler gear	Diameter of needle bearing contact area	At reverse idler gear shaft	13.990–14.000 mm (0.5508–0.5512 in.)	When worn or damaged
	End play		0.06–0.38 mm (0.002–0.015 in.)	———
	I.D.		18.007–18.020 mm (0.7089–0.7094 in.)	When worn or damaged
	Thrust washer thickness	Transmission housing side	0.96–1.04 mm (0.038–0.041 in.)	———
		Reverse idler gear shaft holder side	0.97–1.05 mm (0.038–0.041 in.)	———
	I.D. of reverse idler gear shaft holder		14.006–14.024 mm (0.5514–0.5521 in.)	When worn or damaged
	I.D. of transmission housing of reverse idler gear shaft contact area		14.006–14.024 mm (0.5514–0.5521 in.)	———

Protected by AP

Item	Measurement	Qualification	Standard or New			
			Wire Diameter	O.D.	Free Length	No. of Coils
Main valve body spring (see page 14-264)	Shift valve D spring		0.7 mm (0.028 in.)	6.6 mm (0.260 in.)	33.7 mm (1.327 in.)	12.6
	Shift valve C spring		0.8 mm (0.031 in.)	6.6 mm (0.260 in.)	49.1 mm (1.933 in.)	21.7
	Kick-down valve spring		0.8 mm (0.031 in.)	6.6 mm (0.260 in.)	49.1 mm (1.933 in.)	21.7
	Modulator valve spring		1.6 mm (0.063 in.)	10.4 mm (0.409 in.)	33.5 mm (1.319 in.)	9.8
	Relief valve spring		1.2 mm (0.047 in.)	11.1 mm (0.437 in.)	39.0 mm (1.535 in.)	9.9
	Lock-up shift valve spring		0.9 mm (0.035 in.)	7.6 mm (0.299 in.)	63.0 mm (2.480 in.)	22.4
	Cooler check valve spring		0.6 mm (0.024 in.)	5.8 mm (0.228 in.)	14.5 mm (0.571 in.)	6.8
	Torque converter check valve spring		1.2 mm (0.047 in.)	8.6 mm (0.339 in.)	33.4 mm (1.315 in.)	11.7
	Servo control valve spring		0.9 mm (0.035 in.)	6.4 mm (0.252 in.)	32.5 mm (1.280 in.)	17.5
	Reverse CPC valve spring		0.7 mm (0.028 in.)	6.1 mm (0.240 in.)	17.8 mm (0.701 in.)	7.9
Regulator valve body spring (see page 14-266)	Stator reaction spring		4.5 mm (0.177 in.)	35.4 mm (1.394 in.)	30.3 mm (1.193 in.)	2.1
	Regulator valve spring A		1.9 mm (0.075 in.)	14.7 mm (0.579 in.)	80.6 mm (3.173 in.)	16.1
	Regulator valve spring B		1.6 mm (0.063 in.)	9.2 mm (0.362 in.)	44.0 mm (1.732 in.)	12.5
	Lock-up control valve spring		0.7 mm (0.028 in.)	6.6 mm (0.260 in.)	42.9 mm (1.689 in.)	15.3
	Lock-up timing valve spring		0.65 mm (0.026 in.)	6.6 mm (0.260 in.)	34.8 mm (1.370 in.)	14.1
Servo body spring (see page 14-267)	CPC valve B spring		0.7 mm (0.028 in.)	6.1 mm (0.240 in.)	17.8 mm (0.701 in.)	7.9
	CPC valve A spring		0.7 mm (0.028 in.)	6.1 mm (0.240 in.)	17.8 mm (0.701 in.)	7.9
	Shift valve B spring		0.8 mm (0.031 in.)	6.6 mm (0.260 in.)	49.1 mm (1.933 in.)	21.7
	Shift valve A spring		0.8 mm (0.031 in.)	6.6 mm (0.260 in.)	49.1 mm (1.933 in.)	21.7
Top accumulator body spring (see page 14-268)	Shift valve E spring		0.8 mm (0.031 in.)	7.1 mm (0.280 in.)	49.0 mm (1.929 in.)	17.2
	CPC valve C spring		0.7 mm (0.028 in.)	6.1 mm (0.240 in.)	17.8 mm (0.701 in.)	7.9
	5th accumulator spring A		2.2 mm (0.087 in.)	16.4 mm (0.646 in.)	75.7 mm (2.980 in.)	14.2
	5th accumulator spring B		2.0 mm (0.079 in.)	10.0 mm (0.394 in.)	45.5 mm (1.791 in.)	11.6
	4th/1st-hold accumulator spring		3.4 mm (0.134 in.)	19.6 mm (0.772 in.)	57.4 mm (2.260 in.)	8.4

Protected by AR

Standards and Service Limits

Automatic Transmission and A/T Differential (cont'd)

Item	Measurement	Qualification	Standard or New			
			Wire Diameter	O.D.	Free Length	No. of Coils
Accumulator body spring (see page 14-269)	1st accumulator spring B		2.3 mm (0.091 in.)	12.6 mm (0.496 in.)	42.0 mm (1.654 in.)	9.9
	1st accumulator spring A		2.4 mm (0.094 in.)	19.5 mm (0.768 in.)	67.7 mm (2.665 in.)	10.2
	2nd accumulator spring B		2.6 mm (0.102 in.)	13.0 mm (0.512 in.)	44.0 mm (1.732 in.)	9.0
	2nd accumulator spring A		2.5 mm (0.098 in.)	19.6 mm (0.772 in.)	57.7 mm (2.272 in.)	9.5
3rd accumulator spring (see page 14-270)	3rd accumulator spring		3.1 mm (0.122 in.)	19.6 mm (0.772 in.)	39.4 mm (1.551 in.)	5.5

Item	Measurement	Qualification	Standard or New	Service Limit
A/T differential carrier	Pinion shaft contact area I.D.		18.010 – 18.028 mm (0.7091 – 0.7098 in.)	———
	Carrier-to-pinion shaft clearance		0.023 – 0.057 mm (0.0009 – 0.0022 in.)	0.1 mm (0.004 in.)
	Driveshaft contact area I.D.		28.025 – 30.055 mm (1.103 – 1.104 in.)	———
	Carrier-to-driveshaft clearance		0.045 – 0.096 mm (0.002 – 0.004 in.)	0.12 mm (0.005 in.)
	Carrier-to-intermediate shaft clearance		0.080 – 0.116 mm (0.003 – 0.005 in.)	———
	Tapered roller bearing starting torque (preload)	For new bearing	2.9 – 4.1 N·m (30 – 42 kgf·cm, 26 – 36 lbf·in.)	Adjust
		For used bearing	2.6 – 3.8 N·m (27 – 39 kgf·cm, 23 – 34 lbf·in.)	Adjust
A/T differential pinion gear	Backlash		0.05 – 0.15 mm (0.002 – 0.006 in.)	———
	I.D.		18.042 – 18.066 mm (0.7103 – 0.7113 in.)	———
	Pinion gear-to-pinion shaft clearance		0.055 – 0.095 mm (0.0022 – 0.0037 in.)	0.12 mm (0.005 in.)

Protected by MR

Steering

Item	Measurement	Qualification	Standard or New
Steering wheel	Rotational play measured at outside edge with engine running		0−10 mm (0−0.39 in.)
	Initial turning load measured at outside edge with engine running		29 N (3.0 kgf, 6.6 lbf)
Gearbox	Angle of rack guide screw loosened from locked position		15°±5°
Pump	Output pressure with shut-off valve closed		7,940−8,630 kPa (81−88 kgf/cm², 1,150−1,250 psi)
Power steering fluid	Capacity Use Honda Power Steering Fluid	Reservoir capacity	0.32 ℓ (0.33 US qt)
		System overhaul	1.1 ℓ (1.16 US qt)
Drive belt			Auto tensioner

Suspension

Item	Measurement	Qualification	Standard or New	Service Limit
Wheel alignment	Camber	Front	−0°30′ ±30′	
		Rear	−1°00′ ±30′	
	Caster	Front	3°17′ ±45′	
	Total Toe-in	Front	0±2 mm (0±0.08 in.)	
		Rear	IN 2±2 mm (0.08±0.08 in.)	
	Front wheel turning angle	Inside wheel	35°06′ ±2°	
		Outside wheel	30°12′ (Reference)	
Wheel	Aluminum wheel runout	Axial	0−0.7 mm (0−0.03 in.)	2.0 mm (0.08 in.)
		Radial	0−0.7 mm (0−0.03 in.)	1.5 mm (0.06 in.)
Wheel bearing	End play	Front	0−0.05 mm (0−0.002 in.)	
		Rear	0−0.05 mm (0−0.002 in.)	

Protected by AR

Standards and Service Limits

Brakes

Item	Measurement	Qualification	Standard or New	Service Limit
Parking brake lever	Distance traveled when lever pulled with 196 N (20 kgf, 44 lbf) of force		6 to 10 clicks	
Brake pedal	Pedal height (carpet removed)	M/T model	171 mm (6.73 in.)	
		A/T model	170 mm (6.68 in.)	
	Free play		1 – 5 mm (0.04 – 0.20 in.)	
Master cylinder	Piston-to-pushrod clearance		No adjustment	
Brake disc	Thickness	Front (A/T model)	27.9 – 28.1 mm (1.10 – 1.11 in.)	26.0 mm (1.02 in.)
		Front (M/T model)	24.9 – 25.1 mm (0.98 – 0.99 in.)	23.0 mm (0.91 in.)
		Rear	8.9 – 9.1 mm (0.350 – 0.358 in.)	7.5 mm (0.30 in.)
	Runout	Front	———	0.10 mm (0.004 in.)
		Rear	———	0.10 mm (0.004 in.)
	Parallelism	Front and rear	———	0.015 mm (0.0006 in.)
Brake pad	Thickness	Front (A/T model)	10.3 – 11.0 mm (0.41 – 0.43 in.)	1.6 mm (0.06 in.)
		Front (M/T model)	8.8 – 10.0 mm (0.35 – 0.39 in.)	1.6 mm (0.06 in.)
		Rear	8.5 – 9.5 mm (0.33 – 0.37 in.)	1.6 mm (0.06 in.)

Air Conditioning

Item	Measurement	Qualification	Standard or New
Refrigerant	Type		HFC-134a (R-134a)
	Capacity of system		500 – 550 g (17.6 – 19.4 oz)
Refrigerant oil	Type		DENSO ND-OIL 8 (P/N 38897-PR7-A01AH or 38899-PR7-A01)
	Capacity of components	Condenser	25 mℓ (5/6 fl oz)
		Evaporator	45 mℓ (1 1/2 fl oz)
		Each line and hose	10 mℓ (1/3 fl oz)
		Compressor	120 – 135 mℓ (4 – 4 1/2 fl oz)
Compressor	Field coil resistance	At 68°F (20°C)	3.9 –4.3 Ω
	Pulley-to-pressure plate clearance		0.30 – 0.55 mm (0.012 – 0.023 in.)
Drive belt	Tension		Auto tensioner

Protected by AP

Design Specifications

specs

Item	Measurement	Qualification	Specification
DIMENSIONS	Overall length		4,730 mm (186.2 in.)
	Overall width		1.835 mm (72.2 in.)
	Overall height		1,441 mm (56.7 in.)
	Wheelbase		2,740 mm (107.9 in.)
	Track	Front	1,577 mm (62.1 in.)
		Rear	1,576 mm (62.0 in.)
	Seating capacity		five (5)
WEIGHT (U.S.A.)	Gross Vehicle Weight Rating (GVWR)	A/T model	4,525 lbs
		M/T model	4,435 lbs
WEIGHT (CANADA)	Gross Vehicle Weight Rating (GVWR)	A/T model	2,050 kg
		M/T model	2,010 kg
ENGINE	Type		Water cooled, 4-stroke SOHC VTEC engine
	Cylinder arrangement		60° V6-cylinder, transverse
	Bore and stroke		89.0 x 86.0 mm (3.50 x 3.39 in.)
	Displacement		3,210 cm^3 (196 cu in.)
	Compression ratio		11.0
	Valve train		Belt drive, SOHC VTEC 4 valves per cylinder
	Lubrication system		Forced, wet sump, with trochoid pump
	Oil pump displacement	At 6,300 rpm (min $^{-1}$)	52.8 ℓ (55.8 US qt)/minute
	Water pump displacement	At 6,000 rpm (min $^{-1}$)	92 ℓ (97 US qt)/minute
	Fuel required		Premium UNLEADED gasoline with 91 pump octane number or higher
STARTER	Type		Gear reduction
	Normal output		1.6 kW
	Nominal voltage		12 V
	Hour rating		30 seconds
	Rotation of direction		Clockwise as viewed from gear end
CLUTCH	Clutch type	M/T	Single plate dry, diaphragm spring
		A/T	3-element torque converter with lock-up clutch
	Clutch friction material surface area	M/T	264 cm^2 (40.86 sq in.)
MANUAL TRANSMISSION	Type		Synchronized, 6-speed forward, 1 reverse
	Primary reduction		Direct 1:1
	Gear ratio	1st	3.933
		2nd	2.478
		3rd	1.700
		4th	1.250
		5th	0.975
		6th	0.770
		Reverse	4.008
	Final reduction	Type	Single helical gear
		Gear ratio	3.285

Protected by CAR

(cont'd)

Design Specifications

(cont'd)

Item	Measurement	Qualification	Specification
AUTOMATIC TRANSMISSION	Type		Electronically controlled automatic, 5-speed forward, 1 reverse
	Primary reduction		Direct 1:1
	Gear ratio	1st	2.653
		2nd	1.552
		3rd	1.021
		4th	0.666
		5th	0.480
		Reverse	1.846
	Final reduction	Type	Single helical gear
		Gear ratio	4.428
STEERING	Type		Power-assisted rack and pinion
	Overall ratio		15.4
	Turns, lock-to-lock		2.77
	Steering wheel diameter		380 mm (15.0 in.)
SUSPENSION	Type	Front	Independent double wishbone with stabilizer, coil spring
		Rear	Independent multilink with stabilizer, coil spring
	Shock absorber	Front	Telescopic, hydraulic, nitrogen gas-filled
		Rear	Telescopic, hydraulic, nitrogen gas-filled
BRAKES	Type of service brake	Front	Power-assisted self-adjusting ventilated disc
		Rear	Power-assisted self-adjusting solid disc
	Type of parking brake		Mechanical actuating, rear wheels
	Pad friction surface area	Front (A/T model)	55.2 cm^2 x 2 (9.02 sq in. x 2)
		Front (M/T model)	74.0 cm^2 x 2 (11.47 sq in. x 2)
		Rear	27.9 cm^2 x 2 (4.33 sq in. x 2)
TIRES	Size		P235/45R17 93W or 235/45R17 93W (optional)
	Size of spare tire	A/T model	T135/80R16 101M
		M/T model	T145/70R17 106M
AIR CONDITIONING	Compressor	Type	Piston
		Capacity	188 mℓ (11.47 cu in.)/rev.
		Maximum speed	7,922 rpm
		Lubricant capacity	120 mℓ (4 fl oz)
		Lubricant type	DENSO ND-OIL 8
	Condenser	Type	Corrugated fin
	Evaporator	Type	Corrugated fin
	Blower	Type	Radial
		Motor type	250 W/12 V
		Speed control	Infinite variable
		Maximum capacity	560 m^3/h (19,780 cu ft/h)
	Temperature control		Air-mix type
	Compressor clutch	Type	Dry, single plate, poly V-belt drive
		Electrical power consumption at 68°F (20°C)	42 W maximum at 12 V
	Refrigerant	Type	HFC-134a (R-134a)
		Capacity	500 – 550 g (17.6 – 19.4 oz)

Protected

Item	Measurement	Qualification	Specification
ELECTRICAL RATINGS	Battery		12 V – 65 AH/20 hours
	Starter		12 V – 1.6 kW
	Alternator		12 V – 130A
	Fuses	Under-hood fuse/ relay box	120A, 50A, 40A, 30A, 20A, 15A, 10A, 7.5A
		Under-dash fuse/ relay box	30A, 20A, 15A, 10A, 7.5A
	Light bulbs	Headlight high beam	12 V – 35 W (HID)
		Headlight low beam	12 V – 35 W (HID)
		Front fog lights (U.S. model)	12 V – 51 W (HB4)
		Day time running lights (Canada model)	12 V – 60 W (HB3)
		Front Turn signal lights	12 V – 21 W
		Front parking lights	12 V – 5 W
		Front side marker lights	LED
		Rear side marker lights	LED
		Rear turn signal lights	12 V – 21 W
		Stop/taillights	LED
		Taillights	LED
		High-mount brake light	LED
		Back-up lights	12 V – 21 cp
		License plate light	12 V – 3 cp
		Ceiling light	12 V – 5 W
		Map lights	12 V – 4 cp
		Trunk light	12 V – 5 W
		Door courtesy lights	12 V – 2 cp
		Glove box light	12 V – 1.4 W
		Vanity mirror lights	12 V – 5 W
		Gauge lights	LED
		Indicator lights	LED
		Console box light	12 V – 1.4 W

Protected by A R

Body Specifications

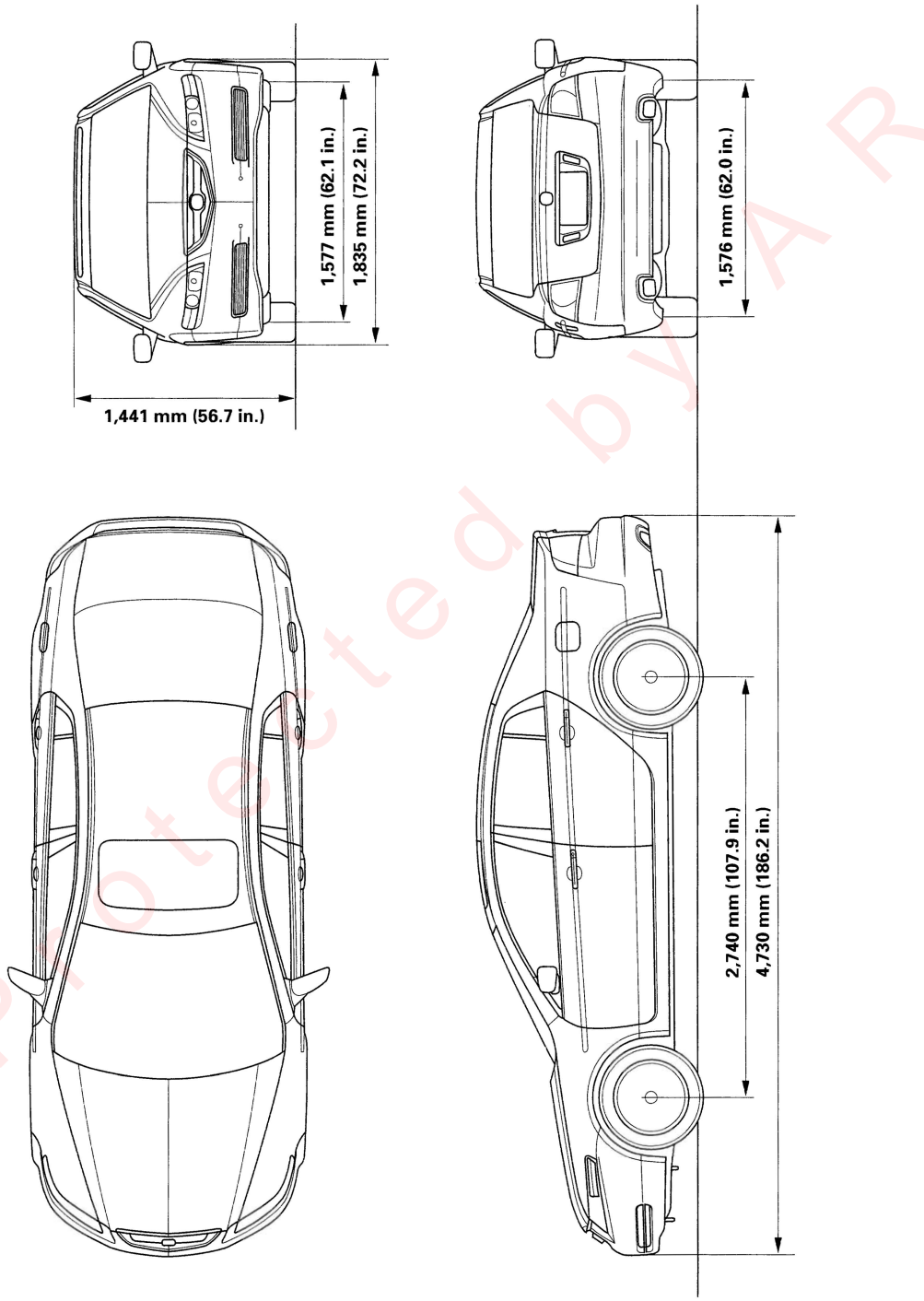

Protected by AR

Maintenance

Lubricants and Fluids 3-2

Maintenance Minder
- Multi-information Display 3-4
- Service Information 3-5
- Resetting the Multi-information Display 3-6
- Maintenance Main Items 3-7
- Maintenance Sub Items 3-8

Protected by A R

Lubricants and Fluids

For details of lubrication points and type of lubricants to be applied, refer to the illustrated index and various work procedures (such as Assembly/Reassembly, Replacement, Overhaul, Installation, etc.) contained in each section.

	LUBRICATION POINTS	LUBRICANT
A	Engine	Honda Motor Oil: P/N 08798-9015 Use 5W-20 motor oil. Look for the API Certification seal on the oil container as shown below. Make sure it says "For Gasoline Engines." SAE Viscosity: See chart below.
B	Manual Transmission	Honda Manual Transmission Fluid (MTF): P/N 08798-9016 Always use Honda MTF. Using motor oil can cause stiffer shifting because it does not contain the proper additives.
	Automatic Transmission	Honda Automatic Transmission Fluid (ATF-Z1): P/N 08200-9001 Always use Honda ATF-Z1. Using a non-Honda ATF can affect shift quality.
C	Brake system (includes VSA line)	Honda DOT 3 Brake Fluid: P/N 08798-9008 Always use Honda DOT 3 Brake Fluid. Using a non-Honda brake fluid can cause corrosion and decrease the life of the system.
D	Clutch line	Honda DOT 3 Brake Fluid: P/N 08798-9008 Always use Honda DOT 3 Brake Fluid. Using a non-Honda brake fluid can cause corrosion and decrease the life of the system.
E	Power steering gearbox	Steering grease: P/N 08733-B070E
F	Shift and select cable ends (M/T)	Silicone grease
G	Throttle cable end (dashboard lower panel hole)	
H I J K L M N O P Q	Brake booster clevis Clutch master cylinder clevis Release fork Shift lever (manual transmission) Battery terminals Pedal linkage Fuel fill door Hood hinges and hood latch Door hinges, upper and lower Trunk hinges	Multipurpose grease
R	Caliper piston boot, caliper pins and boots	Honda Caliper Grease: P/N 08C30-B0234M
S	Power steering system	Honda Power Steering Fluid Always use Honda Power Steering Fluid. Using any other type of power steering fluid or automatic transmission fluid can cause increased wear and poor steering in cold weather.
T	Air conditioning compressor	Compressor oil: DENSO ND-OIL 8 (P/N 38897-PR7-A01AH or 38899-PR7-A01) for refrigerant HFC-134a (R-134a)

API CERTIFICATION SEAL



Recommended Engine Oil
Engine oil viscosity for ambient temperature ranges

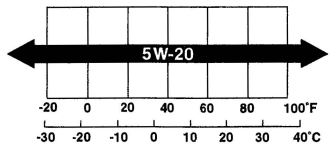

Protected by AIP

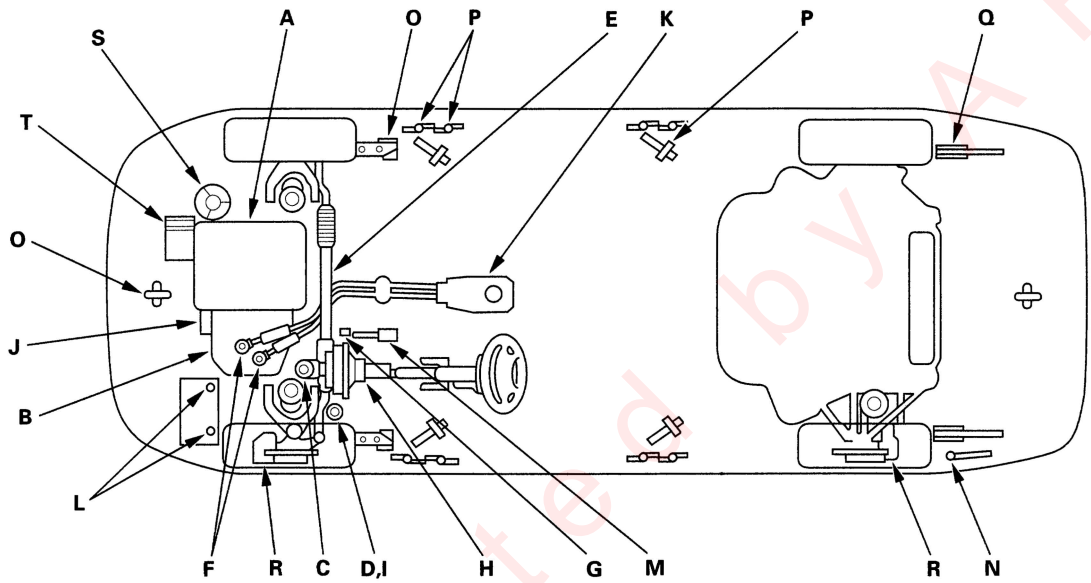

Protected by AR

Maintenance Minder

Multi-information Display

The Maintenance Minder is an important feature of the Multi-information Display. Based on engine operating conditions and accumulated engine revolutions. The TL's onboard computer (ECM/PCM) calculates the remaining engine oil life. The system also displays the code for other scheduled maintenance items needing service.

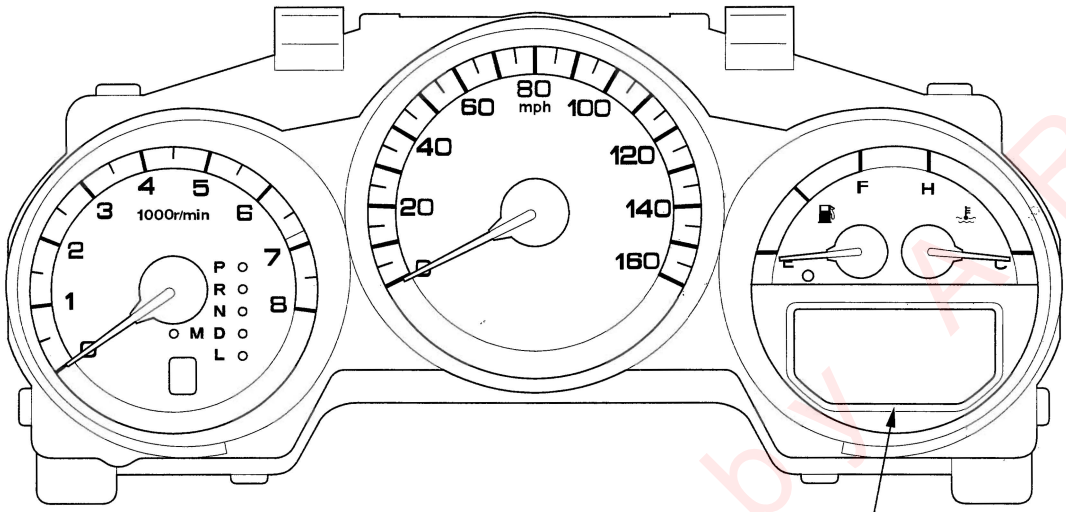

MULTI-INFORMATION DISPLAY

Protected by AMR

Service Information

1. The remaining engine oil life is displayed as a percentage on the multi-information display when the ignition is turned to ON(II).

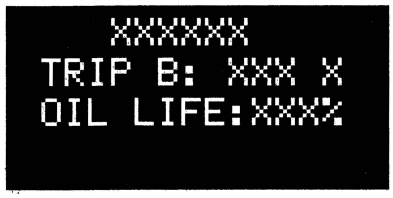

2. When the remaining engine oil life is at 15 percent, the maintenance message "SERVICE DUE SOON", along with the maintenance items currently requiring service will be displayed.

   - Complete list of maintenance main items "A" (see page 3-7).
   - Complete list of maintenance sub items "B" (see page 3-8).



3. When the remaining oil life is less than 5 percent, the maintenance message "SERVICE DUE NOW", along with the items shown in "SERVICE DUE SOON" will display. At this point, the indicated maintenance must be performed as soon as possible.



Protected by MR

Resetting the Multi-information Display

1. Turn the ignition switch to ON(II).

2. Press the SELECT/RESET button repeatedly until the oil life is displayed (if more than 15 %) or the maintenance message is displayed (if oil life is less than 15 %).

   NOTE: If you are resetting the display when the oil life is more than 15 %, the maintenance message "SERVICE DUE SOON" will be displayed. Make sure the maintenance items requiring service have been performed before resetting this display.

3. Press and hold the SELECT/RESET button for 10 seconds until you see the maintenance message or "MAINTENANCE RESET". If the maintenance message is displayed, press and hold the SELECT/RESET button again for 10 seconds until you see "MAINTENANCE RESET".

   - To reset the display, press the SELECT/RESET button to select "OK". The next time the ignition switch is turned to "ON", the display will show "OIL LIFE 100 %".
   - If you do not want to reset the display, press the <or> side of the INFO button to select "Cancel".

NOTE:
- If the required service is performed and the display is not reset or if the display is reset without performing the service, the system will not show the proper maintenance levels. This can lead to serious mechanical problems because there will be no record of when maintenance is needed.
- If the indicated maintenance service is not performed and the remaining engine oil life is less than 0 percent, "SERVICE PAST DUE" will display, have the service performed immediately and make sure to reset the display as previously described.



Protected by AP

Maintenance Main Items

If the message "SERVICE DUE NOW" does not appear more than 12 months after the display is reset, change the engine oil every year.

NOTE:
- Independent of the maintenance messages in the Multi-information Display, replace the brake fluid every 3 years.
- Inspect idle speed every 160,000 miles (256,000 km).
- Adjust the valves during services A, B, 1, 2 or 3 if they are noisy.

Symbol	Maintenance Main Items
A	Replace engine oil (see page 8-6). Capacity: without oil filter: 4.0 ℓ (4.2 US qt).
B	Replace engine oil and oil filter (see page 8-6). Capacity: with oil filter: 4.3 ℓ (4.5 US qt).
	Rotate tires, and check tire inflation and condition. Follow the pattern shown in the Owner's Manual.
	Check front and rear brakes (see page 19-3). • Check pads and discs for wear (thickness), damage, and cracks. • Check calipers for damage, leaks, and tightness of mount bolts.
	Check parking brake adjustment (see page 19-7). Number of clicks (6 to 10) when the parking brake lever is pulled with 196 N (20 kgf, 44 lbf) of force.
	Visually inspect the following items: • Check for correct installation and position, check for cracks, deterioration, rust, and leaks. • Check tightness of screws, nuts, and joints. If necessary, retighten.
	Inspect tie rod ends, steering gearbox, and gearbox boots (see page 17-8). • Check rack grease and steering linkage. • Check boots for damage and leaking grease. • Check fluid lines for damage and leaks.
	Inspect suspension components (see page 18-3). • Check bolts for tightness. • Check condition of ball joint boots for deterioration and damage.
	Inspect driveshaft boots (see page 16-4). Check boots for cracks and boot bands for tightness.
	Inspect brake hoses and lines including VSA (see page 19-37). Check the master cylinder, and VSA modulator for damage and leakage.
	Inspect all fluid levels and condition of fluids. • Automatic transmission fluid (ATF-Z1) (see page 14-203). • Manual transmission fluid (MTF) (see page 13-10). • Clutch fluid (see step 11 on page 12-12). • Power steering fluid (see page 17-12). • Brake fluid (see page 19-9). • Windshield washer fluid. • Engine coolant (see page 10-6).
	Inspect exhaust system (see page 9-6)*. Check catalytic converter heat shields, exhaust pipes, and muffler for damage, leaks, and tightness.
	Inspect fuel lines and connections (see page 11-249)*. Check for loose connections, cracks, and deterioration; retighten loose connections and replace damaged parts.

NOTE: According to state and federal regulations, failure to do the maintenance items marked with an asterisk (*) will not void the customer's emissions warranties. However, Honda recommends that all maintenance services be done at the recommended interval, to ensure long-term reliability.

Modified by A R

Maintenance Sub Items

Symbol	Maintenance sub Items
1	Rotate tires, and check tire inflation and condition. Follow the pattern shown in the Owner's Manual.
2	Replace air cleaner element (see page 11-273). If you drive primarily in dusty conditions, replace every 15,000 miles (24,000 km).
	Replace dust and pollen filter (see page 21-74). • Replace the filter at 15,000 miles (24,000) km intervals if the vehicle is driven mostly in urban areas that have high concentrations of soot in the air from industry and diesel-powered vehicles. • Replace the filter whenever airflow from the heating and cooling/climate control system is less than normal.
	Inspect drive belt (see page 4-29). Look for cracks and damage, then check belt deflection by pushing on the belt about 98 N (10 kgf, 22 lbf) midway between the pulleys.
3	Replace automatic transmission fluid (see page 14-204). • Driving in mountainous areas at very low vehicle speed requires transmission fluid changes more frequently than recommended by the Maintenance Minder. If you regularly drive your vehicle under this conditions, have the transmission fluid changed at 60,000 miles (96,000 km), then every 30,000 miles (48,000 km). • Capacity: 3.0 ℓ (3.2 US qt); use Honda ATF-Z1.
	Replace manual transmission fluid (see page 13-10). Capacity: 2.2 ℓ (2.3 US qt); use Honda MTF.
4	Replace spark plugs (see page 4-21). Use IZFR6K-11 (NGK) or SKJ20DR-M11 (DENSO).
	Replace timing belt (see page 6-14), if the vehicle is regularly driven in very high temperatures (over 110℉, 43℃), or in very low temperatures (under −20℉, −29℃), replace every 60,000 miles (U.S.)/ 100,000 km (Canada) and inspect water pump (see page 10-5).
	Inspect the valve clearance (cold) (see page 6-8). • Otherwise adjust only if noisy. • Intake: 0.20−0.24 mm (0.008−0.009 in.), Exhaust: 0.28−0.32 mm (0.011−0.013 in.).
5	Replace engine coolant (see page 10-6). Capacity (including the reserve tank): M/T: 6.3 ℓ (6.7 US qt), A/T: 6.4 ℓ (6.8 US qt); use Honda All Season Antifreeze/Coolant Type 2.

Protected by AR

Engine Electrical

Engine Electrical
Special Tools 4-2

Starting System
Component Location Index 4-3
Symptom Troubleshooting Index 4-4
Circuit Diagram 4-5
Starter Circuit Troubleshooting 4-6
Clutch Interlock Switch Test ... 4-8
Starter Solenoid Test 4-8
Starter Performance Test 4-9
Starter Replacement 4-10
Starter Overhaul 4-11

Ignition System
Component Location Index 4-16
Circuit Diagram 4-17
Ignition Timing Inspection 4-18
Ignition Coil Removal/ Installation 4-19
Ignition Coil Relay Circuit Troubleshooting 4-20
Spark Plug Inspection 4-21

Charging System
Component Location Index 4-22
Symptom Troubleshooting Index 4-23
Circuit Diagram 4-24
Charging Circuit Troubleshooting 4-25
Drive Belt Inspection 4-29
Drive Belt Replacement 4-29
Drive Belt Auto-tensioner Inspection 4-30
Drive Belt Auto-tensioner Replacement 4-31
Tensioner Pulley Replacement 4-31
Alternator Replacement 4-32
Alternator Overhaul 4-34

Cruise Control
Component Location Index 4-38
Circuit Diagram 4-39
Symptom Troubleshooting Index 4-40
Cruise Control Input Test 4-41
Cruise Control Combination Switch Test/Replacement 4-43
Cruise Control Combination Switch Illumination Bulb Replacement 4-43
Clutch Pedal Position Switch Test 4-44

Engine Mount Control System
Component Location Index 4-45
Circuit Diagram 4-46
Troubleshooting 4-47

Protected by

Special Tools

Ref. No.	Tool Number	Description	Qty
①	A973X-041-XXXXX	Vacuum Pump/Gauge, 0—30 in.Hg	1
②	07746-0010300	Attachment, 42 x 47 mm	1
③	07749-0010000	Driver	1

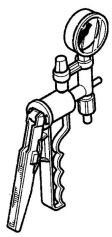

①

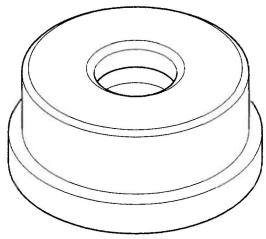

②

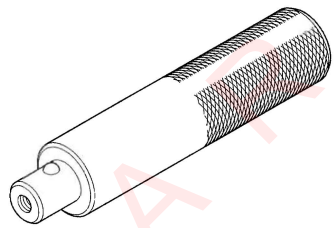

③

Protected by A

Component Location Index

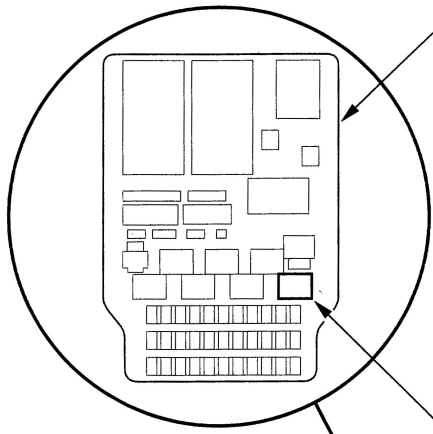

UNDER-DASH FUSE/RELAY BOX

STARTER CUT RELAY
Test, page 22-75

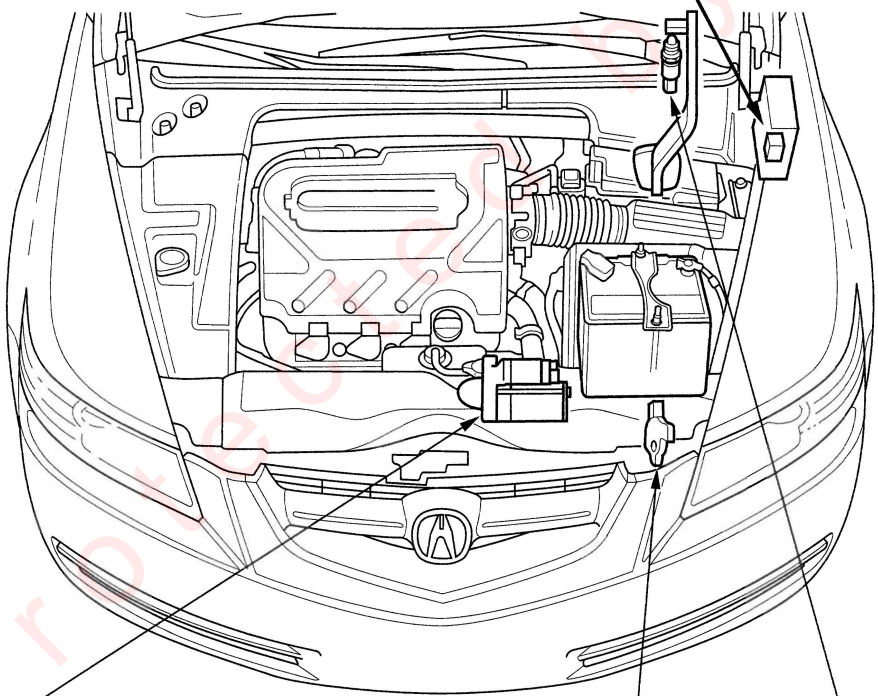

STARTER
Starter Circuit Troubleshooting, page 4-6
Solenoid Test, page 4-8
Performance Test, page 4-9
Replacement, page 4-10
Overhaul, page 4-11

CLUTCH INTERLOCK SWITCH (M/T)
Test, page 4-8

TRANSMISSION RANGE SWITCH (A/T)
Test, page 14-240
Replacement, page 14-242

Protected by AR

Symptom Troubleshooting Index

Symptom	Diagnostic procedure	Also check for
Engine does not start (does not crank)	1. Check for loose battery terminals or connections. 2. Test the battery for a low charge (see page 22-74). 3. Check the starter (see page 4-6). 4. Check the starter cut relay (see page 22-75). 5. Check the transmission range switch (A/T) (see page 14-240). 6. Check the clutch interlock switch (M/T) (see page 4-8). 7. Check the ignition switch or wire (see page 22-77).	• Poor ground at G101, G102 (A/T) or G503 (M/T)
Engine cranks, but does not start	1. Troubleshoot the immobilizer system (see page 22-325). 2. Test the fuel pump (see page 11-241). 3. Check for plugged or damaged fuel line (see page 11-249). 4. Check for plugged fuel filter (see page 11-256). 5. Check the throttle body (see page 11-272). 6. Check for PGM-FI DTC's. 7. Check for low engine compression (see page 6-6). 8. Check for damaged or broken timing belt.	
Engine is hard to start	1. Test the fuel pump (see page 11-241). 2. Check for plugged or damaged fuel line (see page 11-249). 3. Check for plugged fuel filter (see page 11-256). 4. Check for restricted three way catalytic converter (TWC) or exhaust system. 5. Check for PGM-FI DTC's.	

Protected by A R

Circuit Diagram

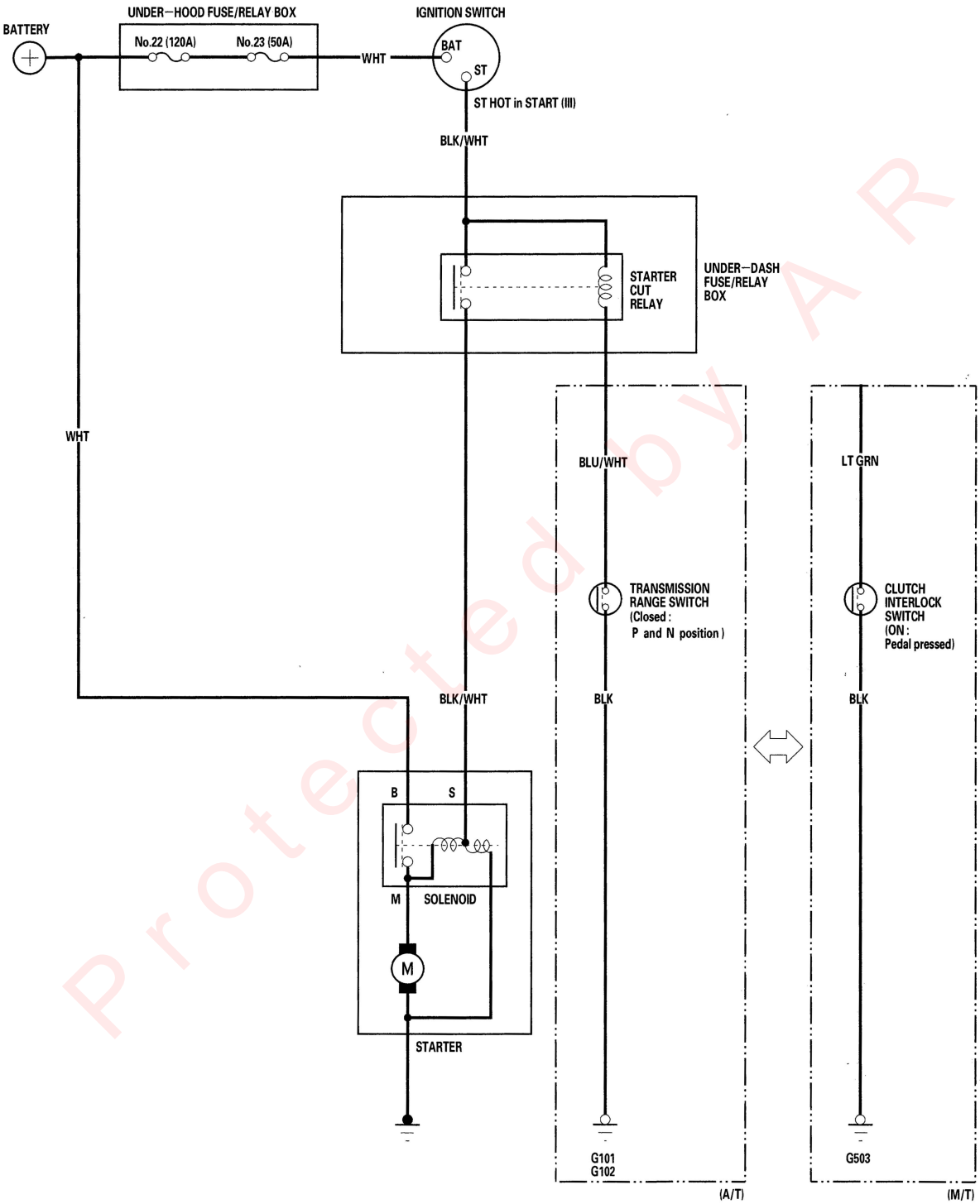

Protected by AR

Starter Circuit Troubleshooting

NOTE:
- Air temperature must be between 59° and 100°F (15° and 38°C) during this procedure.
- After this inspection, you must reset the engine control module (ECM)/powertrain control module (PCM), using the Honda Diagnostic System (HDS) (see page 11-4), otherwise the ECM/PCM will continue to stop the fuel injectors from operating.
- The battery must be in good condition and fully charged.

Recommended Procedure:
- Use a starter system tester.
- Connect and operate the equipment in accordance with the manufacturer's instructions.

Alternate Procedure

1. Remove the left side engine compartment cover (see step 3 on page 5-2).

2. Hook up the following equipment:

   - Ammeter, 0 – 400A
   - Voltmeter, 0 – 20 V (accurate within 0.1 volt)

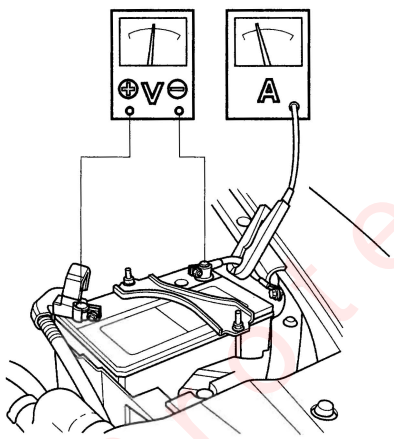

3. Connect the HDS to the data link connector (DLC) (see step 2 on page 11-3).

4. Select PGM-FI, then INSPECTION, then ALL INJECTORS OFF function on the HDS.

5. With the shift lever in N or P (A/T) or clutch pedal pressed (M/T), turn the ignition switch to start (III).

   Did the starter crank the engine normally?

   YES – The starting system is OK. Go to step 12.

   NO – Go to step 6.

6. Check the battery condition. Check electrical connections at the battery, the negative battery cable to body, the engine ground cables and the starter for looseness and corrosion. Then try cranking the engine again.

   Did the starter crank the engine?

   YES – Repairing the loose connection corrected the problem. The starting system is OK. Go to step 12.

   NO – Check the following:

   - If the starter will not crank the engine at all, go to step 7.
   - If it cranks the engine erratically or too slowly, go to step 9.
   - If it won't disengage from the flywheel or torque converter ring gear when you release the key, check the following:
     – Solenoid plunger and switch malfunction
     – Dirty drive gear or damaged overrunning clutch

Protected by AR

7. Make sure the transmission is in neutral, then disconnect the BLK/WHT wire from the starter solenoid S terminal. Connect a jumper wire from the battery positive terminal to the solenoid terminal.

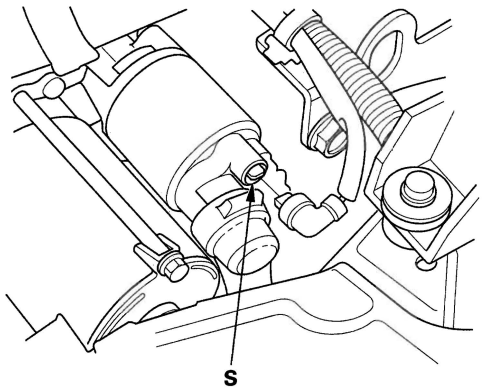

Did the starter crank the engine?

YES – Go to step 8.

NO – Remove the starter, and repair or replace as necessary. ■

8. Check the following items in the order listed until you find the open circuit:

   - The BLK/WHT wire and connectors between the under-dash fuse/relay box and the ignition switch, and between the under-dash fuse/relay box and the starter.
   - The ignition switch (see page 22-77).
   - The transmission range switch and connector (A/T) (see page 14-240) or the clutch interlock switch and connector (M/T) (see page 4-8).
   - The starter cut relay (see page 22-75).

9. While cranking the engine, check the cranking voltage and current draw.

   Is cranking voltage greater than or equal to 8.5 V and current draw less than or equal to 380A?

   YES – Go to step 10.

   NO – Replace the starter, or remove and disassemble it, and check the following: ■

   - Starter armature dragging
   - Shorted armature winding
   - Excessive drag in engine

10. Check the engine speed while cranking the engine.

    Is the engine speed above 100 rpm?

    YES – Go to step 11.

    NO – Replace the starter, or remove and disassemble it, and check the following: ■

    - Open circuit in starter armature commutator segments
    - Excessively worn starter brushes
    - Open circuit in commutator brushes
    - Dirty or damaged helical splines or drive gear
    - Faulty drive gear clutch

11. Remove the starter, and inspect its drive gear and the flywheel or torque converter ring gear for damage. Replace any damaged parts.

12. Select ECM/PCM reset (see page 11-4) to cancel the ALL INJECTORS OFF function on the HDS.

13. Reinstall the left side engine compartment cover (see step 68 on page 5-22).

Protected by A P

Clutch Interlock Switch Test

1. Disconnect the clutch interlock switch 2P connector (A).

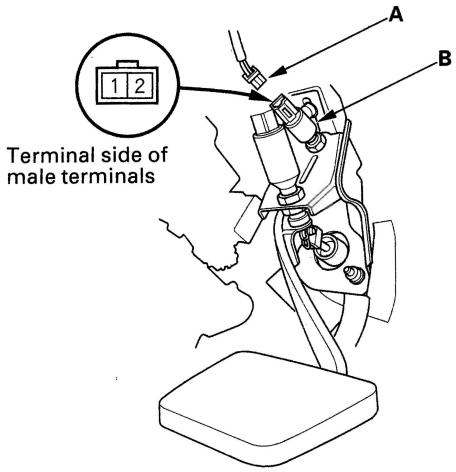

2. Remove the clutch interlock switch (B).
3. Check for continuity between the terminals according to the table.
   - If the continuity is not as specified, replace the clutch interlock switch.
   - If OK, install clutch interlock switch and adjust the pedal height (see page 12-6).

Terminal / Clutch Interlock Switch	1	2
PRESSED	○——○	
RELEASED		

Starter Solenoid Test

1. Check the hold-in coil for continuity between the S terminal and the armature housing (ground). There should be continuity.
   - If there is continuity, go to step 2.
   - If there is no continuity, replace the solenoid.

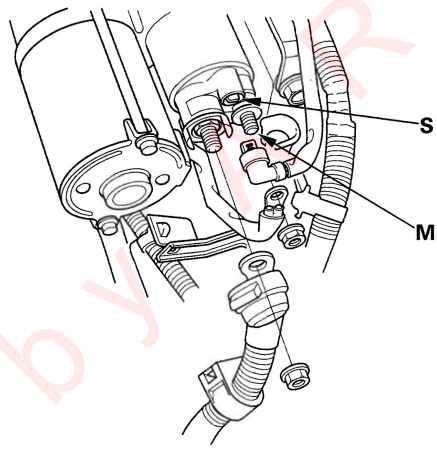

2. Check the pull-in coil for continuity between the S terminal and M terminal. There should be continuity.
   - If there is continuity, the solenoid is OK.
   - If there is no continuity, replace the solenoid.

Protected by

Starter Performance Test

1. Disconnect the wire from the M terminal.
2. Make a connection as shown using as heavy a wire as possible (preferably equivalent to the wire used for the vehicle). To avoid damaging the starter, never leave the battery connected for more than 10 seconds.
3. Connect the battery as shown. Be sure to disconnect the starter motor wire from the solenoid. If the starter pinion moves out, it is working properly.

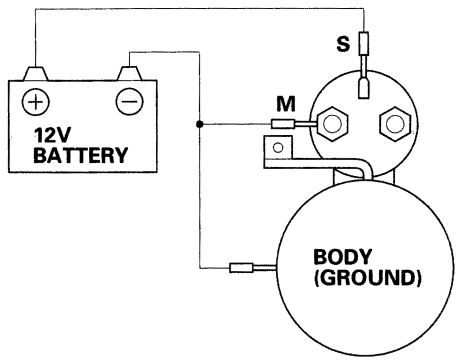

4. Disconnect the battery from the M terminal. If the pinion does not retract, the hold-in coil of the solenoid is working properly.

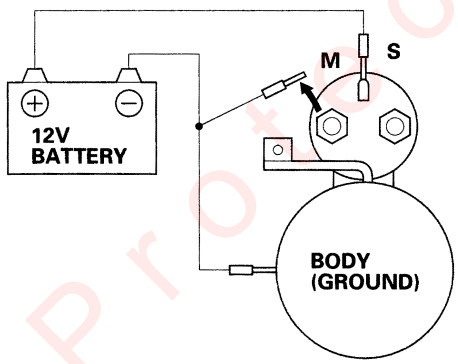

5. Disconnect the battery from the starter body. If the pinion retracts immediately, it is working properly.

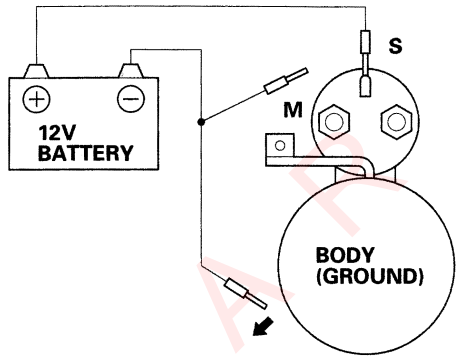

6. Clamp the starter firmly in a vise.
7. Reconnect the wire to the M terminal.
8. Connect the starter to the battery as shown in the diagram, and confirm that the motor starts and keeps rotating.

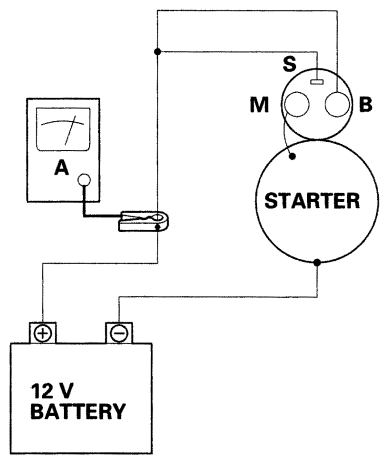

9. If the electric current and motor speed meet the specifications when the battery voltage is at 11.5 V, the starter is working properly.

Specifications
Electric current: 80A or less
Motor speed: 2,600 rpm or more

Protected by AP

Starter Replacement

1. Make sure you have the anti-theft code for the radio, and the navigation system, then write down the XM radio channel presets. Make sure ignition switch OFF.
2. Remove the left side engine compartment cover (see step 3 on page 5-2).
3. Disconnect the negative cable from the battery first, then disconnect the positive cable.
4. Remove the battery hold-down bracket, then remove the battery and battery tray.
5. Remove the harness clamp (A).

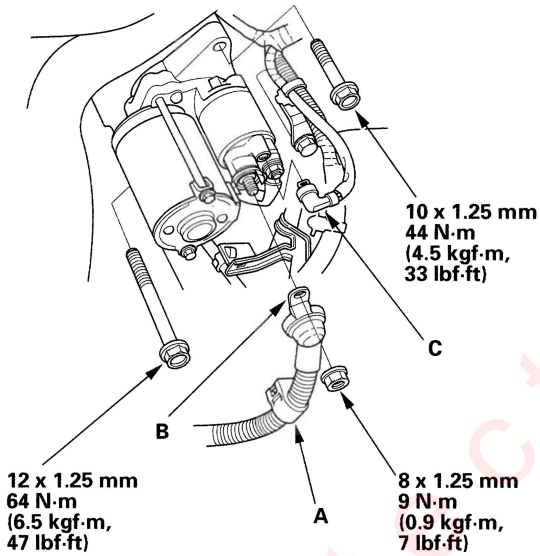

6. Disconnect the starter cable (B) from the B terminal, then disconnect the BLK/WHT wire (C) from the S terminal.
7. Remove the two bolts holding the starter, then remove the starter.
8. Install in the reverse order of removal. Make sure the crimped side of the ring terminal is facing out.

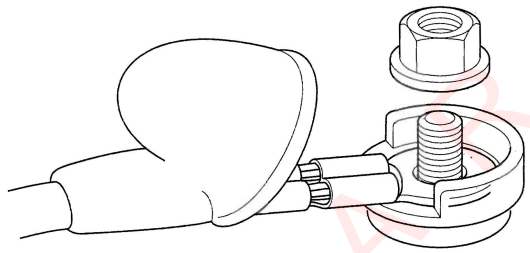

9. Connect the battery positive cable and negative cable to the battery.
10. Start the engine to make sure the starter works properly.
11. Enter the anti-theft codes for the radio and the navigation system, then enter the customer's XM radio channel presets.
12. Set the clock.

Protected by ARK

Starter Overhaul

Disassembly/Reassembly

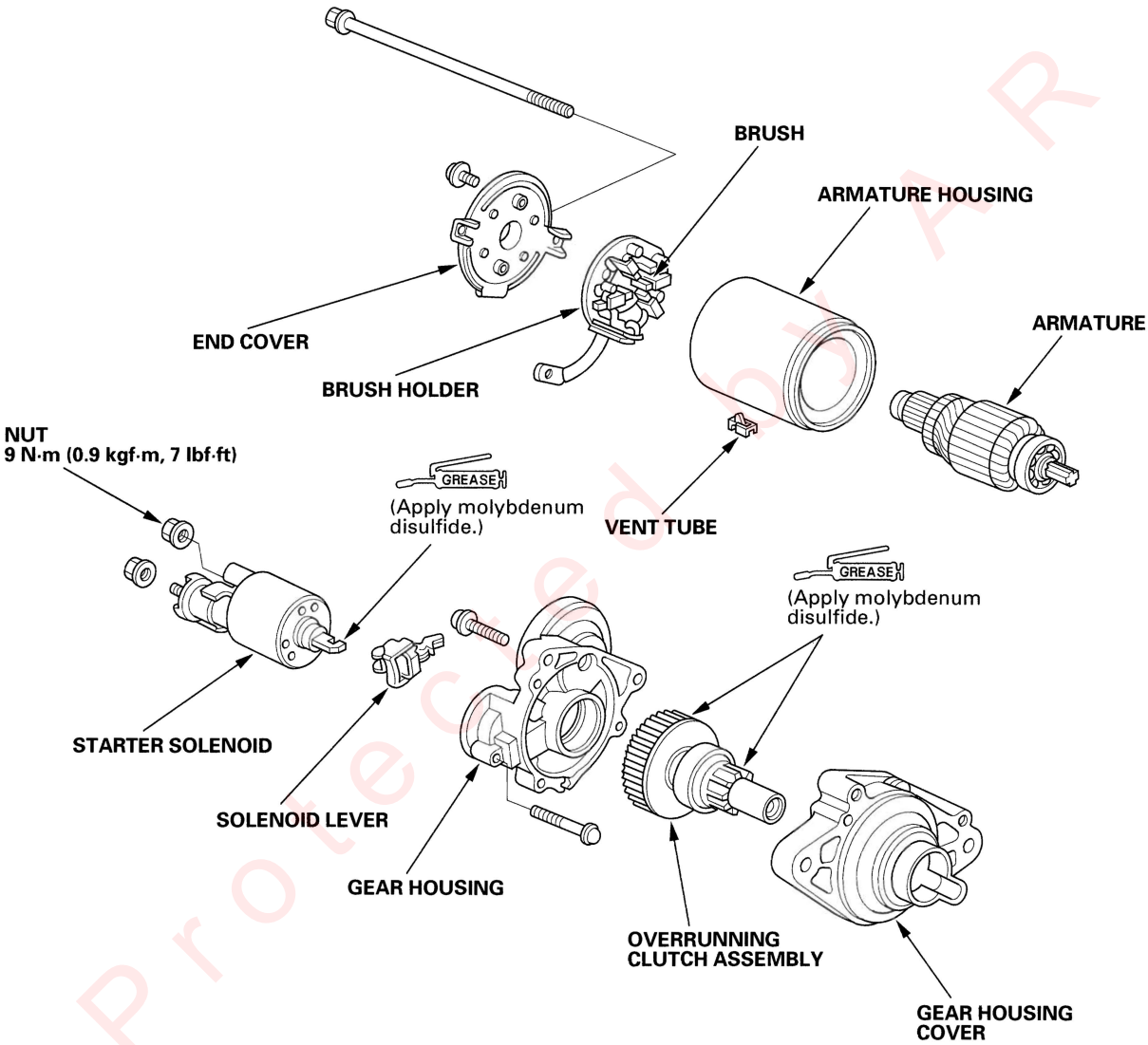

Protected by AR

(cont'd)

Starter Overhaul (cont'd)

Armature Inspection and Test

1. Remove the starter (see page 4-10).
2. Disassemble the starter as shown at the beginning of this procedure.
3. Inspect the armature for wear or damage from contact with the permanent magnet. If there is wear or damage, replace the armature.

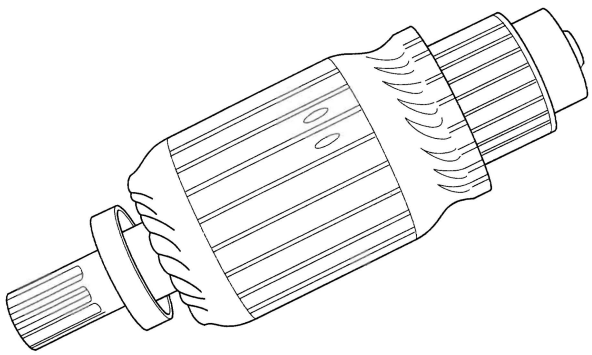

4. Check the commutator (A) surface. If the surface is dirty or burnt, resurface with emery cloth or a lathe within the following specifications, or recondition with # 500 or # 600 sandpaper (B).

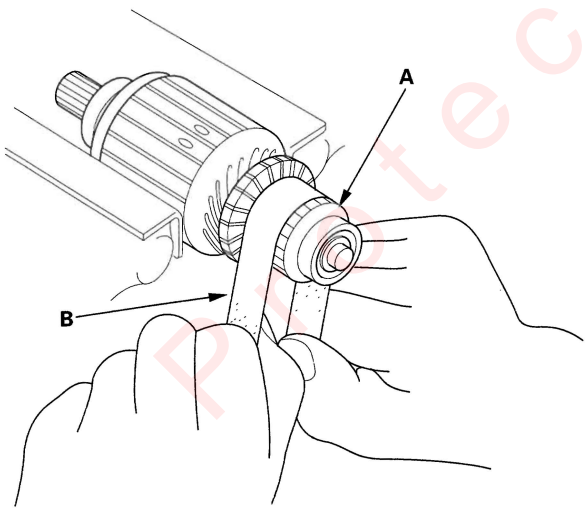

5. Check the commutator diameter. If the diameter is below the service limit, replace the armature.

Commutator Diameter
Standard (New): 28.0—28.1 mm (1.102—1.106 in.)
Service Limit: 27.5 mm (1.083 in.)

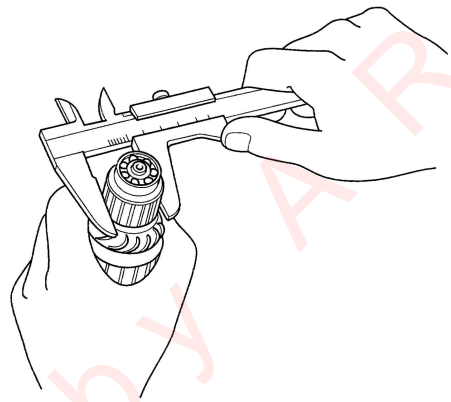

6. Measure the commutator (A) runout.

- If the commutator runout is within the service limit, check the commutator for carbon dust or brass chips between the segments.
- If the commutator runout is not within the service limit, replace the armature.

Commutator Runout
Standard (New): 0.02 mm (0.001 in.) max.
Service Limit: 0.05 mm (0.002 in.)

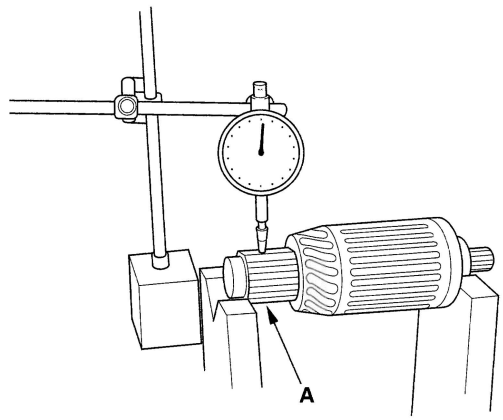

Protected by AR

7. Check the mica depth (A). If the mica is too high (B), undercut the mica with a hacksaw blade to the proper depth. Cut away all the mica (C) between the commutator segments. The undercut should not be too shallow, too narrow, or V-shaped (D).

Commutator Mica Depth
Standard (New): 0.4—0.5 mm (0.016—0.020 in.)
Service Limit: 0.15 mm (0.006 in.)

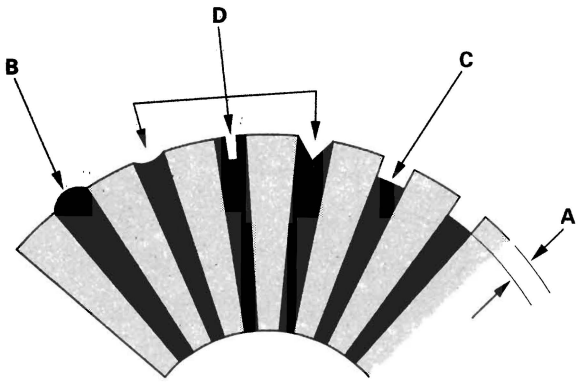

8. Check for continuity between the segments of the commutator. If an open circuit exists between any segments, replace the armature.

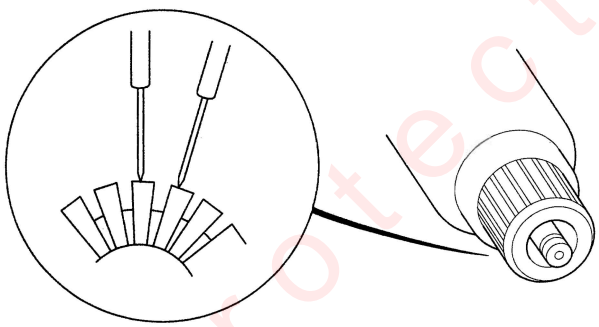

9. Place the armature (A) on an armature tester (B). Hold a hacksaw blade (C) on the armature core. If the blade is attracted to the core or vibrates while the core is turned, the armature is shorted. Replace the armature.

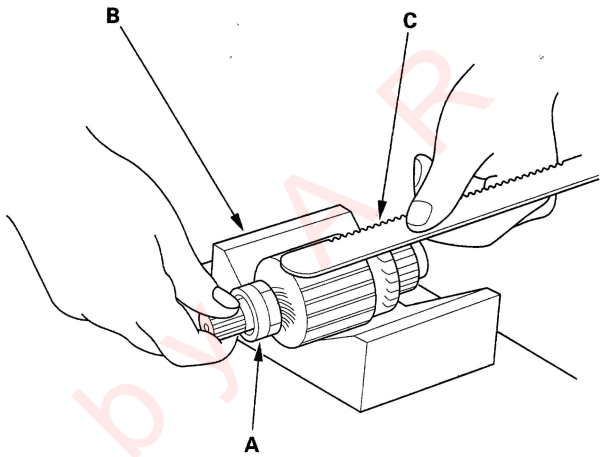

10. Check with an ohmmeter that no continuity exists between the commutator (A) and armature coil core (B), and between the commutator and armature shaft (C). If continuity exists, replace the armature.

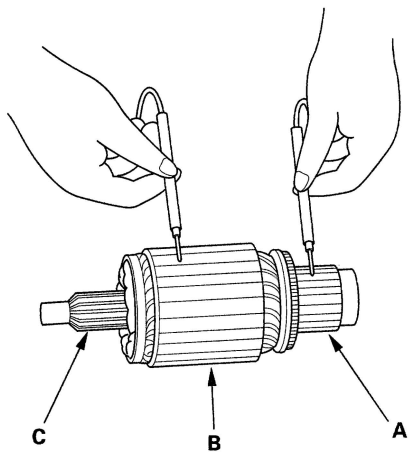

(cont'd)

Protected by AR

Starter Overhaul (cont'd)

Starter Brush Inspection

11. Measure the brush length. If it is not within the service limit, replace the brush holder assembly.

Brush Length
Standard (New): 15.8—16.2 mm (0.62—0.64 in.)
Service Limit: 11.0 mm (0.43 in.)

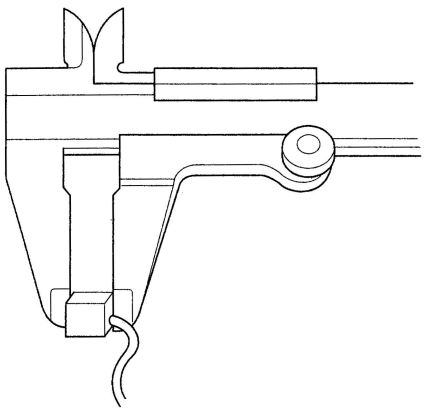

Starter Brush Holder Test

12. Check that there is no continuity between the (+) brush holder (A) and (—) brush holder (B). If there is continuity, replace the brush holder assembly.

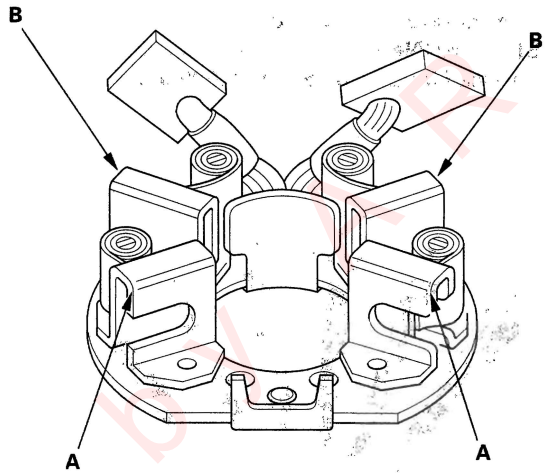

Brush Spring Inspection

13. Insert the brush (A) into the brush holder, and bring the brush into contact with the commutator, then attach a spring scale (B) to the spring (C). Measure the spring tension at the moment the spring lifts off the brush. If the spring tension is not within specification, replace the spring.

Spring Tension:
15.7—17.7 N (1.60—1.80 kgf, 3.53—3.97 lbf)

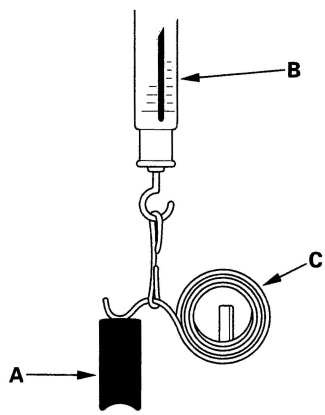

Protected by

14. Pry back each brush spring with a screwdriver, then position the brush about halfway out of its holder, and release the spring to hold it there.

    NOTE: To seat new brushes, slip a strip of # 500 or # 600 sandpaper, with the grit side up, between the commutator and each brush, and smoothly rotate the armature. The contact surface of the brushes will be sanded to the same contour as the commutator.

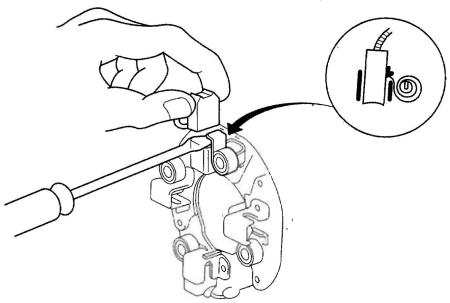

15. Install the armature in the housing. Next, pry back each brush spring again, and push the brush down until it seats against the commutator, then release the spring against the end of the brush.

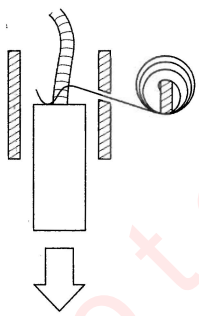

16. Install the starter end cover (A) to retain the brush holder (B).

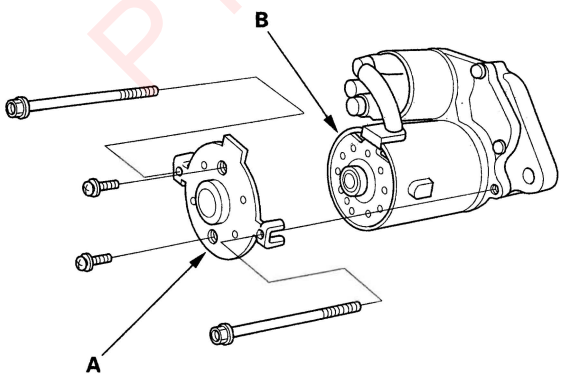

Overrunning Clutch Inspection

17. Slide the overrunning clutch along the shaft. Replace it if it does not slide smoothly.

18. Rotate the overrunning clutch (A) both ways. If it does not lock in either direction or it locks in both directions, replace it.

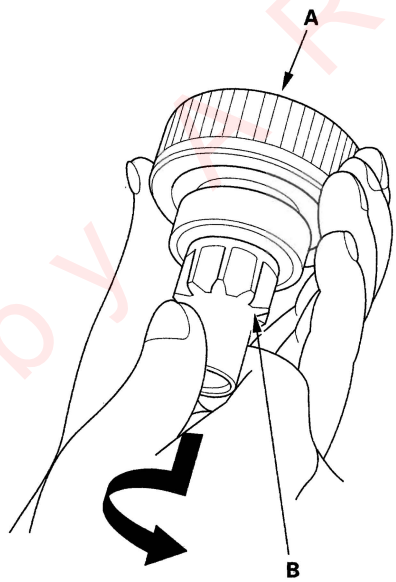

19. If the starter drive gear (B) is worn or damaged, replace the overrunning clutch assembly; the gear is not available separately.

    NOTE: Check the condition of the torque converter ring gear to see if the teeth are damaged.

20. Reassemble the starter in the reverse order of disassembly.

Protected by CARR

Component Location Index

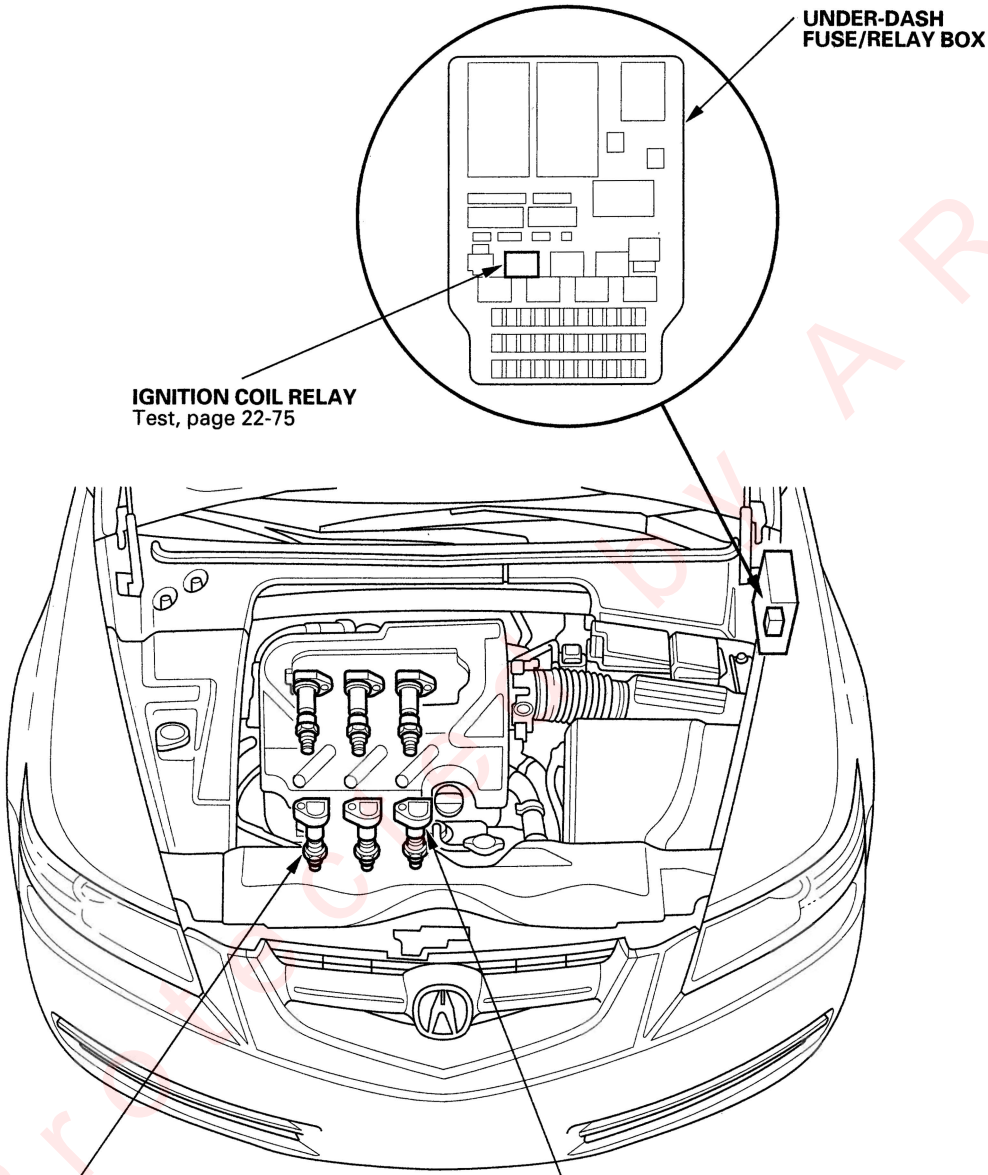

Circuit Diagram

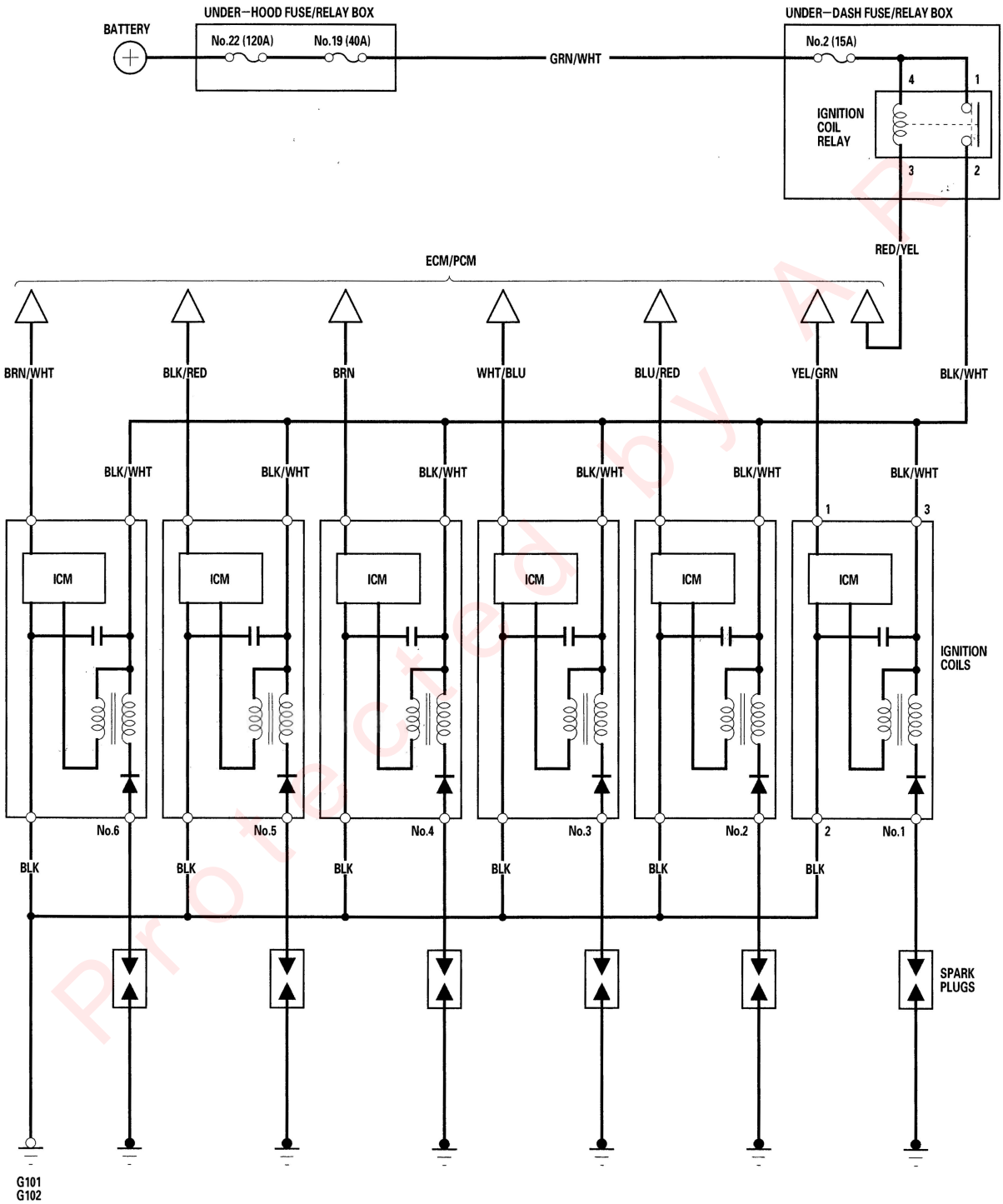

ICM : Ignition Control Module

Protected by A R

Ignition Timing Inspection

1. Connect the Honda Diagnostic System (HDS) to the data link connector (DLC) (see step 2 on page 11-3), and check for DTC's. If a DTC is present, diagnose and repair the cause before inspecting the ignition timing.
2. Start the engine. Hold the engine at 3,000 rpm with no load (in Neutral) until the radiator fan comes on, then let it idle.
3. Check the idle speed (see page 11-238).
4. Select "SCS" mode using the HDS.
5. Remove the right side engine compartment cover (see step 1 on page 4-29).
6. Connect the timing light to the service loop.

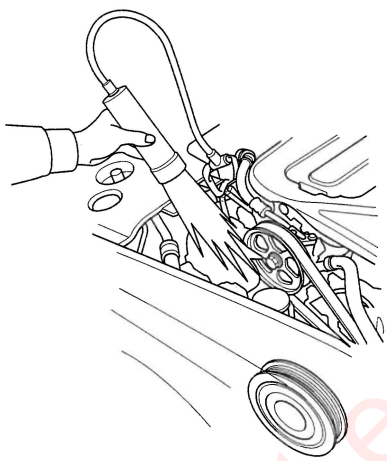

7. Aim the light toward the pointer (A) on the timing belt cover. Check the ignition timing under no load condition: headlights, blower fan, rear window defogger, and air conditioner are not operating.

Ignition Timing
M/T: 10° ±2° BTDC (RED mark (B)) at idle in Neutral
A/T: 10° ±2° BTDC (RED mark (B)) at idle in Park or Neutral

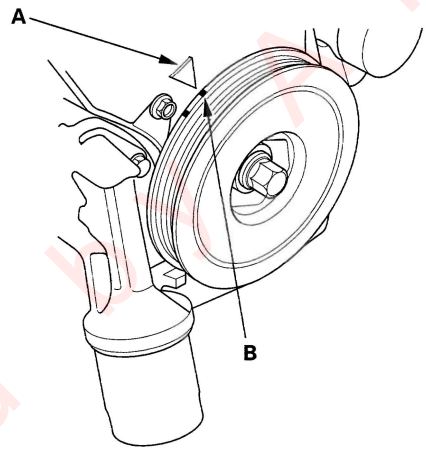

8. If the ignition timing differs from the specification, check cam timing. If cam timing is OK, update the engine control module (ECM)/powertrain control module (PCM) if it does not have the latest software (see page 11-6), or substitute a known-good ECM/PCM (see page 11-7), then recheck. If the system works properly, and the ECM/PCM was substituted, replace the original ECM/PCM (see page 11-171).
9. Disconnect the HDS and the timing light.

Protected by AIR

Ignition Coil Removal/Installation

1. Remove the intake manifold cover.

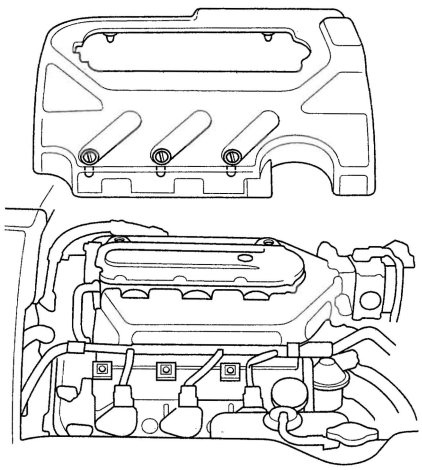

2. Remove the right side engine compartment cover (A), then remove the left rear engine compartment cover (B) and right rear engine compartment cover (C).

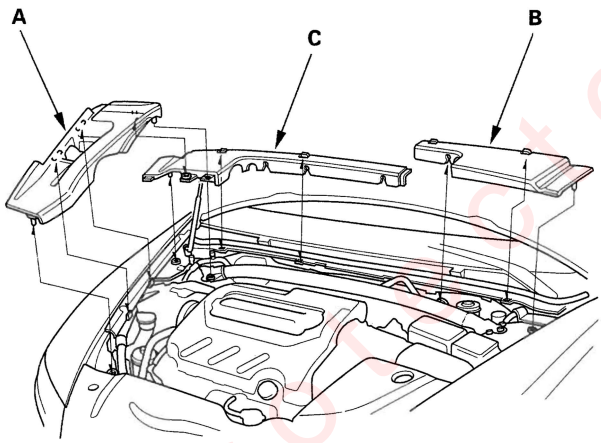

3. When removing the No. 6 coil you must remove the reserve tank heat shield and reserve tank.

4. Disconnect the ignition coil connectors (A), then remove the ignition coils (B).

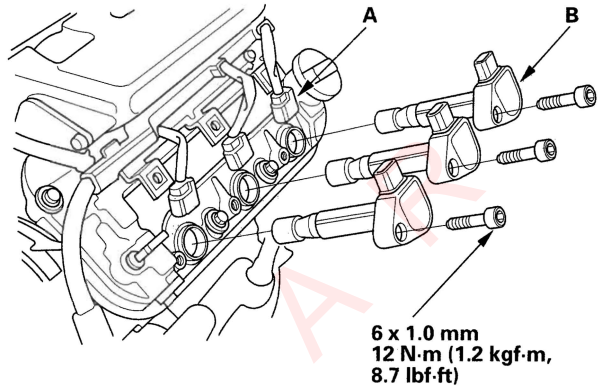

5. Install the ignition coils in the reverse order of removal.

Produced by AR

Ignition Coil Relay Circuit Troubleshooting

1. Check the No. 2 (15A) fuse in the under-dash fuse/relay box.

   Is the fuse OK?

   YES – Go to step 2.

   NO – Replace the fuse. ■

2. Remove the ignition coil relay from the under-dash fuse/relay box and test it (see page 22-75).

   Is the relay OK?

   YES – Go to step 3.

   NO – Replace the ignition coil relay. ■

3. Measure the voltage between ignition coil relay 4P socket terminal No. 1 and body ground, then terminal No. 4 and body ground.

IGNITION COIL RELAY 4P SOCKET

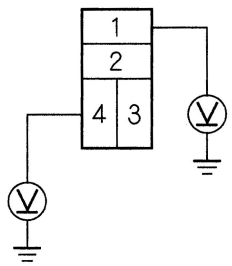

Terminal side of female terminals

Is there battery voltage?

YES – Go to step 4.

NO – Replace the under-dash fuse/relay box. ■

4. Check for continuity between ignition coil relay 4P socket terminal No. 2 and the No. 1 ignition coil 3P connector terminal No. 3.

IGNITION COIL RELAY 4P SOCKET

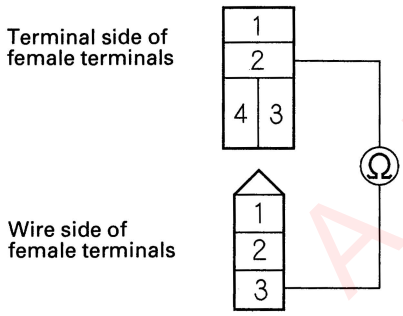

No.1 IGNITION COIL 3P CONNECTOR

Is there continuity?

YES – Go to step 5.

NO – Repair an open in the wire between ignition coil relay 4P socket terminal No. 2 and ignition coil 3P connector terminal No. 3. ■

5. Check for continuity between ignition coil relay 4P socket terminal No. 3 and body ground.

IGNITION COIL RELAY 4P SOCKET

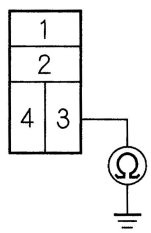

Terminal side of female terminals

Is there continuity?

YES – Repair a short in the wire between ignition coil relay 4P socket terminal No. 3 and ECM/PCM. ■

NO – Repair an open in the wire between ignition coil relay 4P socket terminal No. 3 and ECM/PCM. ■

Protected by AR

Spark Plug Inspection

1. Inspect the electrodes and ceramic insulator.

   - Burned or worn electrodes may be caused by:
     – Advanced ignition timing
     – Loose spark plug
     – Plug heat range too hot
     – Insufficient cooling

   - Fouled plug may be caused by:
     – Retarded ignition timing
     – Oil in combustion chamber
     – Incorrect spark plug gap
     – Plug heat range too cold
     – Excessive idling/low speed running
     – Clogged air cleaner element
     – Deteriorated ignition coils

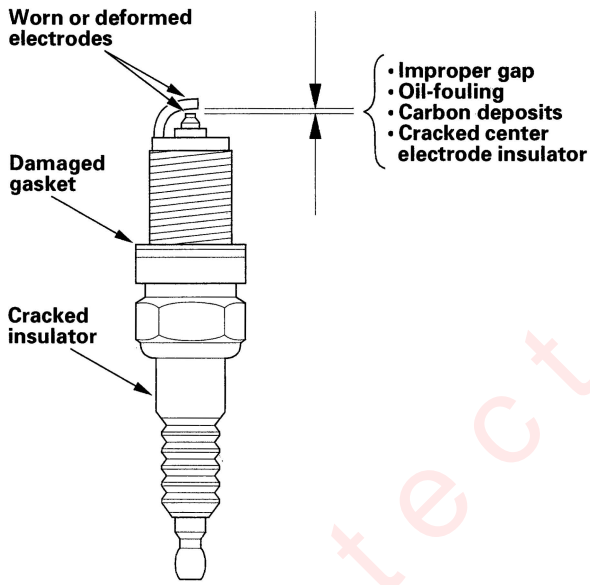

2. Do not adjust the gap (A) of iridium tip plugs ; replace the spark plug if the gap is out of specification.

   Electrode Gap
   Standard (New): 1.0 – 1.1 mm (0.039 – 0.043 in.)

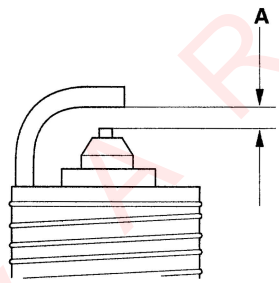

3. Replace the plug at the specified interval or if the center electrode is rounded (A). Use only the spark plugs as listed.

   Spark Plugs
   NGK: IZFR6K-11
   DENSO: SKJ20DR-M11

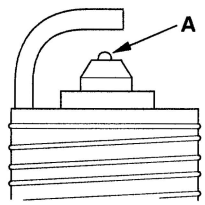

4. Apply a small quantity of anti-seize compound to the plug threads, and screw the plugs into the cylinder head finger-tight. Then torque them to 18 N·m (1.8 kgf·m, 13 lbf·ft).

Protected by R

Component Location Index

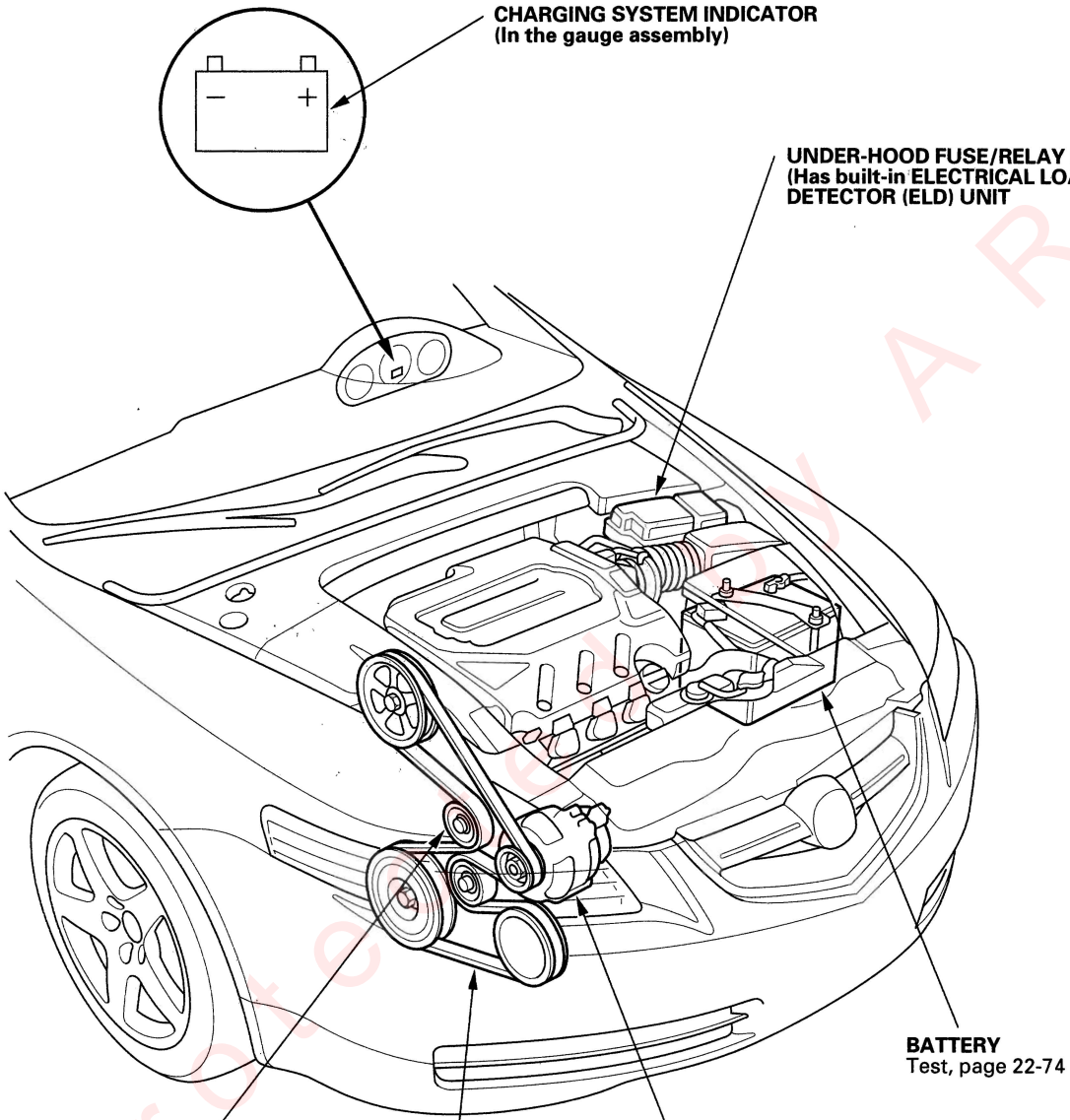

Protected by AR

Symptom Troubleshooting Index

Symptom	Diagnostic procedure	Also check for
Charging system indicator stays on	1. Troubleshoot the charging system indicator circuit (see page 4-25). 2. Check for a broken drive belt (see page 4-29). 3. Check the drive belt auto-tensioner (see page 4-30). 4. Test the alternator (see page 4-25).	
Battery discharged	1. Check for poor connection, open or shorted wire(s) in charging system. 2. Check for electrical current draw. 3. Check for a broken drive belt (see page 4-29). 4. Check the drive belt auto-tensioner (see page 4-30). 5. Test the alternator (see page 4-25). 6. Troubleshoot the alternator control system (see page 4-25). 7. Check for poor connection at battery terminal. 8. Test the battery (see page 22-74).	
Battery overcharged	1. Test the alternator (see page 4-25). 2. Troubleshoot the alternator control system (see page 4-25). 3. Test the battery (see page 22-74).	

Protected by A R

Charging System

Circuit Diagram

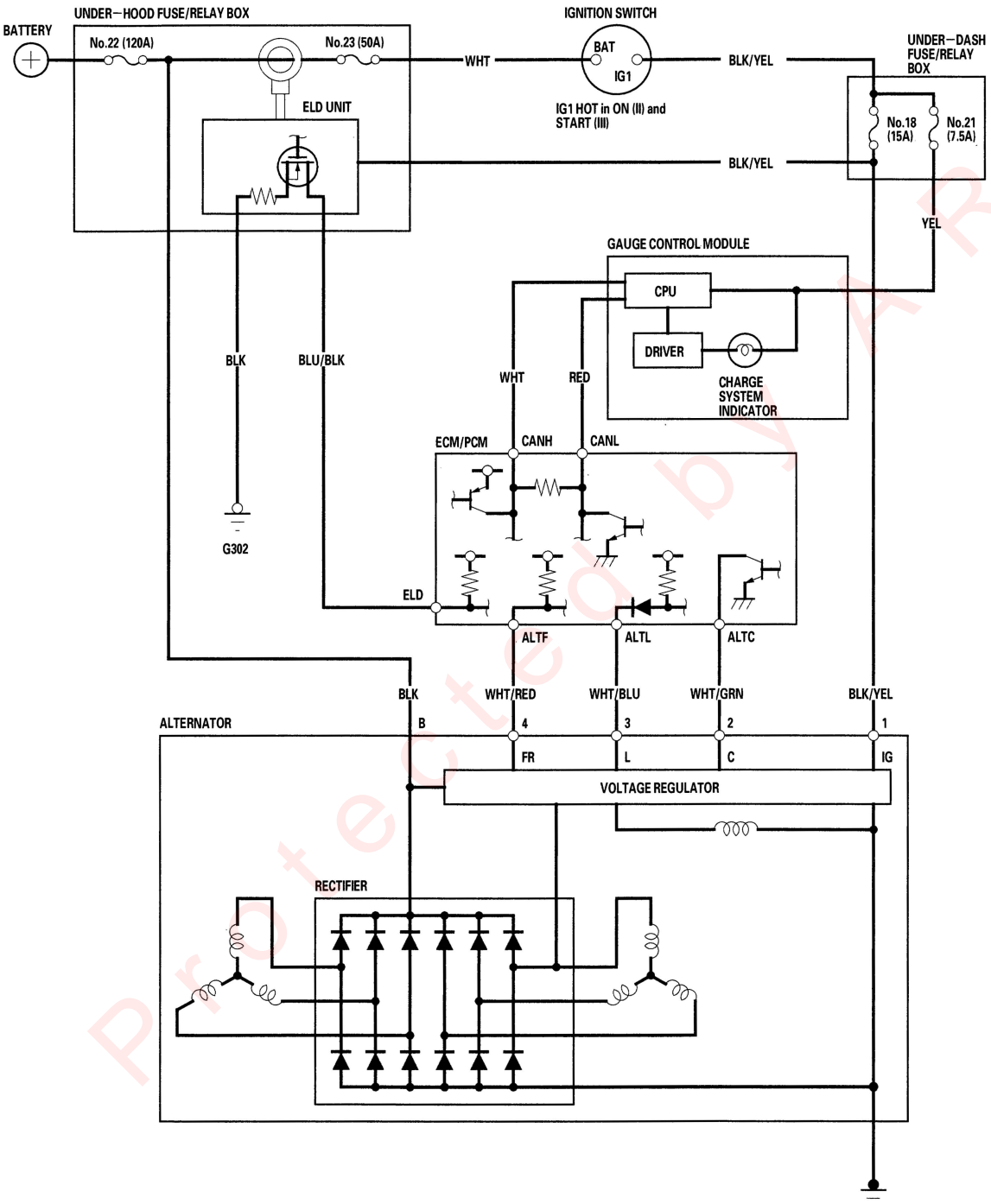

Protected by AR

Charging Circuit Troubleshooting

If the charging system indicator does not come on or does not go off, or the battery is dead or low, test the following items in the order as listed:

- Battery (see page 22-74)
- Charging system indicator test
- Alternator and regulator circuit test
- Alternator control system test

Charging System Indicator Test

1. Turn the ignition switch ON (II).

   Does the charging system indicator come on?

   YES – Go to step 2.

   NO – Go to step 3.

2. Start the engine.

   Does the charging system indicator go off?

   YES – Charging system indicator circuit is OK. Go to the Alternator and Regulator Circuit Test. ■

   NO – Go to step 3.

3. Troubleshoot the multiplex integrated control system (see page 22-108).

   Is the multiplex integrated control system OK?

   YES – Go to step 4.

   NO – Repair the multiplex integrated control system. ■

4. Run the gauge control module self-diagnostic function (see page 22-262).

   Does the charge indicator flash?

   YES – Go to step 5.

   NO – Replace the gauge control module (see page 22-265). ■

5. Turn the ignition switch OFF.

6. Disconnect the alternator 4P connector.

7. Turn the ignition switch ON (II).

8. Measure the voltage between alternator 4P connector terminal No. 1 and body ground.

ALTERNATOR 4P CONNECTOR

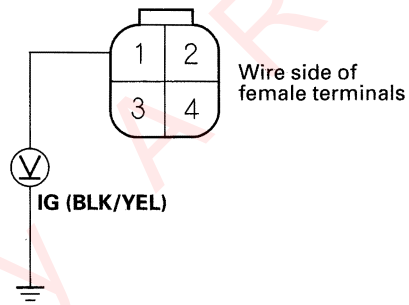

   Is there battery voltage?

   YES – Go to step 9.

   NO – Check for a blown No. 18 (15A) fuse in the under-dash fuse/relay box. If the fuse is OK, repair open in the wire between the alternator and under-dash fuse/relay box. ■

9. Connect the Honda Diagnostic System (HDS) to the data link connector (DLC). Turn the ignition switch ON (II), and jump the SCS line with the HDS, then turn the ignition switch OFF.

   NOTE: This step must be done to protect the engine control module (ECM)/powertrain control module (PCM) from damage.

10. Disconnect ECM/PCM connector E (31P).

(cont'd)

Protected by AR

Charging Circuit Troubleshooting (cont'd)

11. Check for continuity between ECM/PCM connector terminal E11 and alternator 4P connector terminal No. 3.

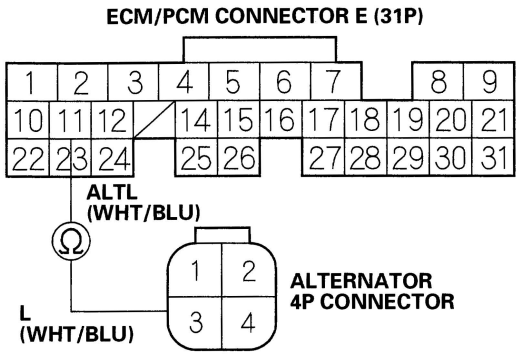

Wire side of female terminals

Is there continuity?

YES — Go to step 12.

NO — Repair an open in the wire between the alternator and the ECM/PCM. ■

12. Check for continuity between ECM/PCM connector terminal E11 and body ground.

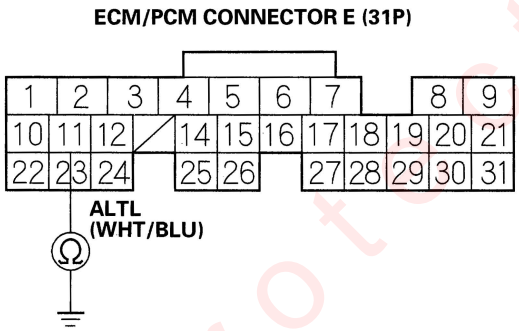

Wire side of female terminals

Is there continuity?

YES — Repair a short in the wire between the alternator and the ECM/PCM. ■

NO — Go to the Alternator and Regulator Circuit Test. ■

Alternator and Regulator Circuit Test

1. Be sure the battery connections are good, and that the battery is sufficiently charged (see page 22-74).

2. Connect a VAT-40 (or equivalent tester), and turn the selector switch to position 1 (starting).

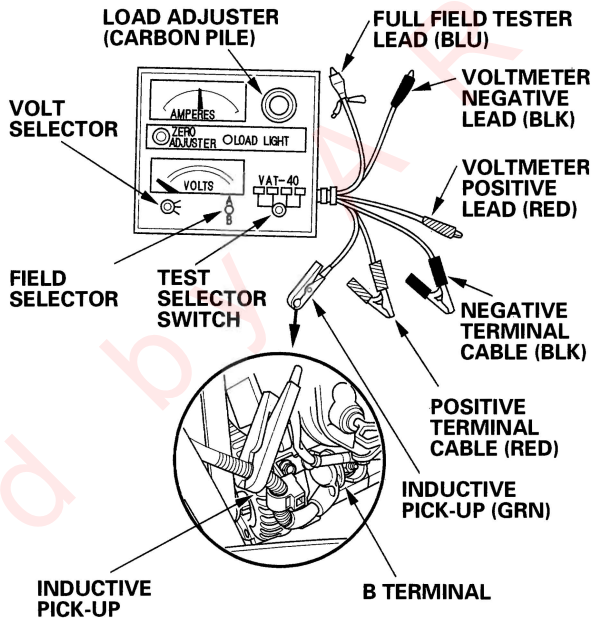

3. Shift to Park or Neutral, and start the engine. Hold the engine at 3,000 rpm, with no load until the radiator fan comes on, then let it idle.

4. Raise the engine speed to 2,000 rpm, and hold it there.

Is the voltage over 15.1 V?

YES — Replace the alternator (see page 4-32) or rear housing assembly (see page 4-34). ■

NO — Go to step 5.

Protected by

5. Release the accelerator pedal, and let the engine idle.

6. Make sure all accessories are turned off. Turn the selector switch to position 2 (charging).

7. Remove the inductive pick-up, and zero the ammeter.

8. Place the inductive pick-up over the B terminal wire of the alternator so that the arrow points away from the alternator.

9. Raise the engine speed to 2,000 rpm, and hold it there.

   Is the voltage less than 13.5 V?

   YES – Go to Alternator Control System Test. ■

   NO – Go to step 10.

10. Apply a load with the VAT-40 until the battery voltage drops to between 12 – 13.5 V.

    Is the amperage 87.5A or more?

    YES – The charging system is OK. ■

    NOTE: If the charge system indicator is still on, replace the alternator (see page 4-32).

    NO – Repair or replace the alternator (see page 4-34). ■

Alternator Control System Test

1. Connect the Honda Diagnostic System (HDS) to the data link connector (DLC), and check for DTC's. If a DTC is present, diagnose and repair the cause before continuing with this test.

2. Disconnect the alternator 4P connector from the alternator.

3. Start the engine, and turn the headlights ON to high beam.

4. Measure voltage between alternator 4P connector terminal No. 2 and the positive terminal of the battery.

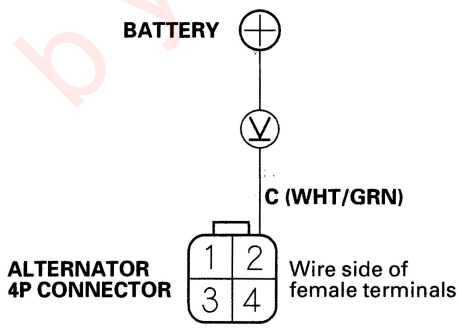

   Is there 1 V or less?

   YES – Go to step 5.

   NO – Go to step 8.

5. Jump the SCS line with the HDS, then turn the ignition switch OFF.

   NOTE: This step must be done to protect the engine control module (ECM)/powertrain control module (PCM) from damage.

6. Disconnect ECM/PCM connector E (31P).

(cont'd)

Protected by AR

Charging Circuit Troubleshooting (cont'd)

7. Check for continuity between ECM/PCM connector terminal E24 and body ground.

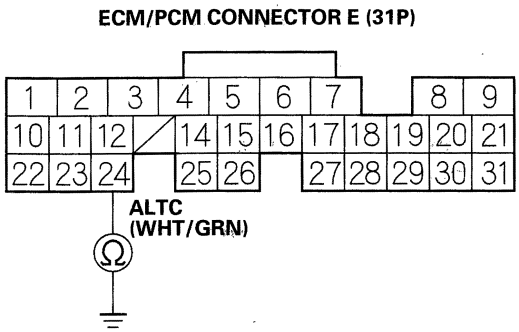

Wire side of female terminals

Is there continuity?

YES—Repair short in the wire between the alternator and ECM/PCM. ■

NO—Update the ECM/PCM if it does not have the latest software (see page 11-6), or substitute a known-good ECM/PCM (see page 11-7), then recheck. If the symptom/indication goes away with a known-good ECM/PCM, replace the original ECM/PCM (see page 11-171). ■

8. Jump the SCS line with the HDS, then turn the ignition switch OFF.

   NOTE: This step must be done to protect the engine control module (ECM)/powertrain control module (PCM) from damage.

9. Disconnect ECM/PCM connector E (31P).

10. Check for continuity between ECM/PCM connector terminal E24 and alternator 4P connector terminal No. 2.

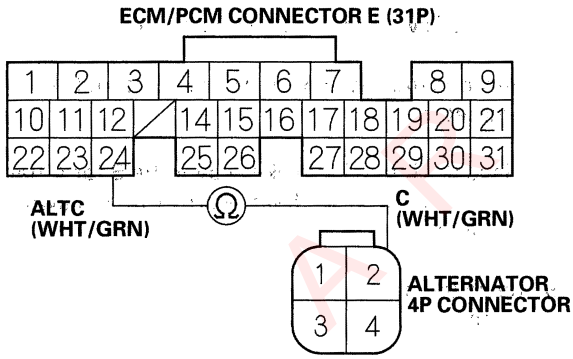

Wire side of female terminals

Is there continuity?

YES—Replace or repair the alternator (see page 4-32). ■

NO—Repair an open in the wire between the alternator and ECM/PCM. ■

Protected by

Drive Belt Inspection

1. Remove the right side engine compartment cover.

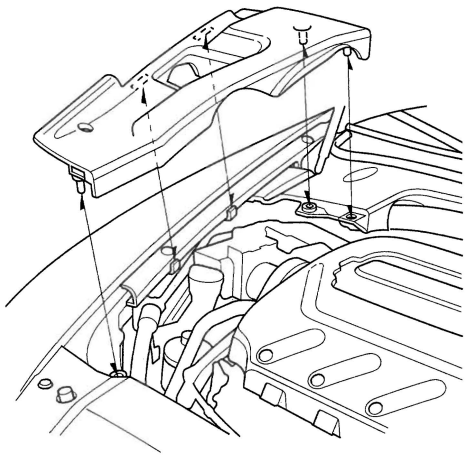

2. Inspect the belt for cracks or damage. If the belt is cracked or damaged, replace it.

3. Check that the auto-tensioner indicator (A) is within the standard range (B) as shown. If it is out of the standard range, replace the drive belt (see page 4-29).

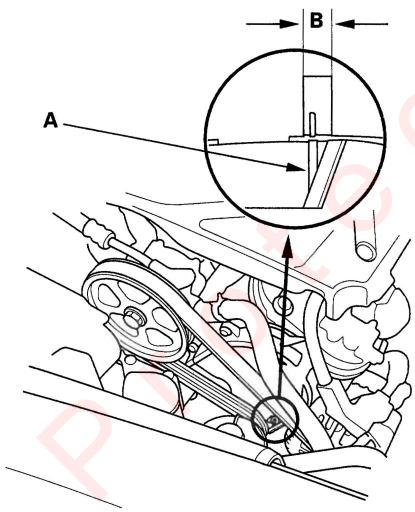

Drive Belt Replacement

1. Remove the right side engine compartment cover.

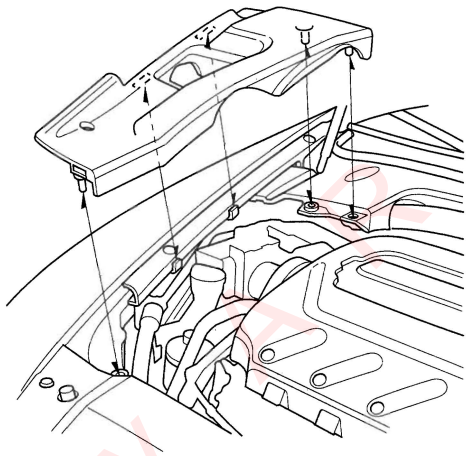

2. Move the auto-tensioner (A) to relieve tension from the drive belt (B), then remove the drive belt.

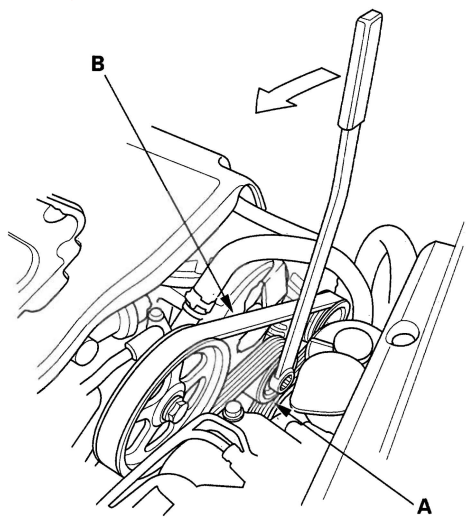

3. Install the new belt in the reverse order of removal.

Protected by

Drive Belt Auto-tensioner Inspection

1. Remove the right side engine compartment cover (see step 1 on page 4-29).

2. Check the position of the auto-tensioner indicator's pointer (A), start the engine, then check the position of the pointer again. If the position changes, replace the auto-tensioner.

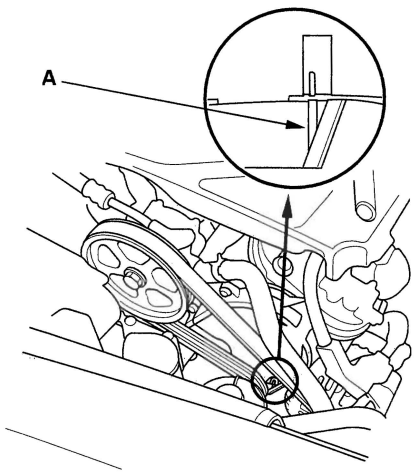

3. Check for abnormal noise from the tensioner pulley. If you hear abnormal noise, replace the auto-tensioner pulley (see page 4-31).

4. Remove the drive belt (see page 4-29).

5. Move the auto-tensioner within its limit with the wrench in the direction shown. Check that the tensioner moves smoothly and without any abnormal noise. If the tensioner does not move smoothly or there is abnormal noise, replace the auto-tensioner (see page 4-31).



6. Remove the auto-tensioner (see page 4-31).

7. Clamp the auto-tensioner (A) by using a 10 mm bolt (B), 8 mm bolt (C) and a vise (D) as shown. Do not clamp the auto-tensioner itself.

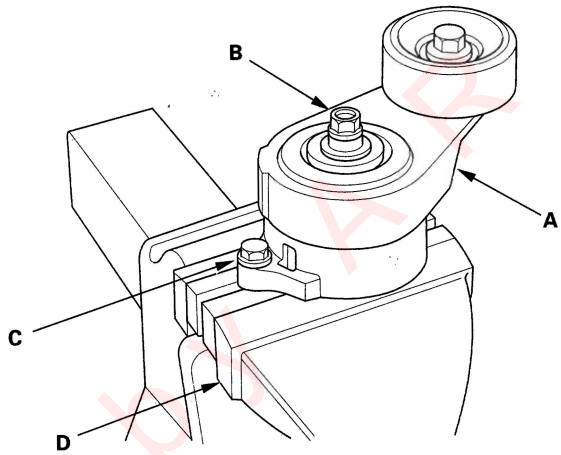

8. Attach a torque wrench (A) to the pulley bolt. measure the torque when the tensioner is turned counterclockwise. If the torque is less than the specified value, replace the auto-tensioner (see page 4-31).

50.5 N·m (5.15 kgf·m, 37.2 lbf·ft)

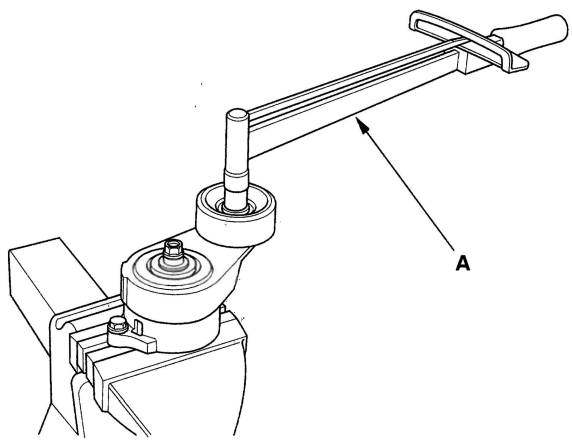

Protected by AR

Drive Belt Auto-tensioner Replacement

1. Remove the drive belt (see page 4-29).
2. Remove the splash shield.
3. Remove the auto-tensioner.

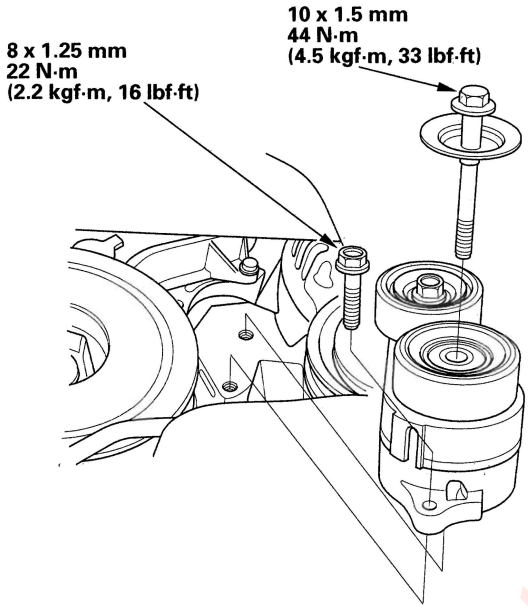

4. Install the auto-tensioner in the reverse order of removal.

Tensioner Pulley Replacement

1. Remove the auto-tensioner (see page 4-31).
2. Remove the pulley bolt (A) (left-hand threads), and remove the tensioner pulley (B).

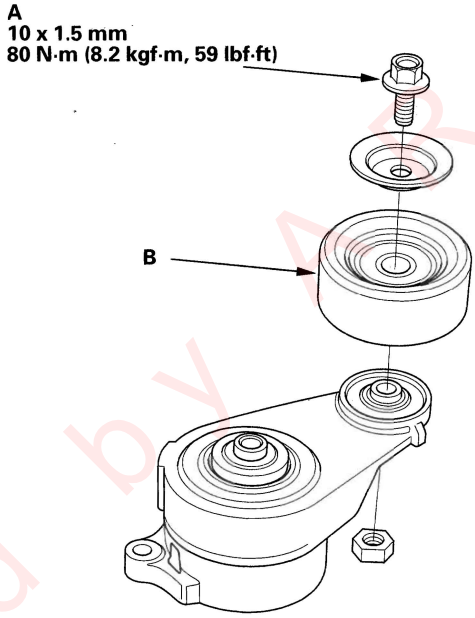

3. Install the tensioner pulley in the reverse order of removal.

Protected by ARR

Alternator Replacement

1. Make sure you have the anti-theft code for the radio, and the navigation system, then write down the XM radio channel presets. Make sure the ignition switch is OFF.

2. Disconnect the negative cable from the battery, then disconnect the positive cable.

3. Disconnect the fan motor connector (A) and compressor clutch connector (B), then remove the reserve tank (C).

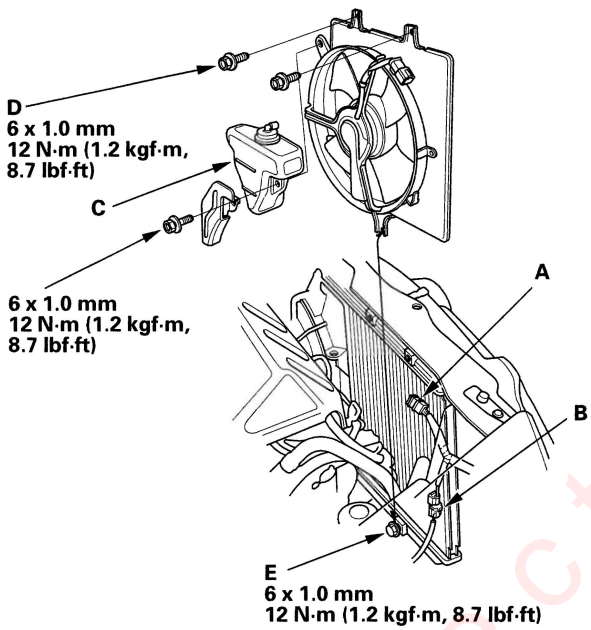

4. Remove the two bolts (D), and loosen bolt (E), then remove the condenser fan shroud.

5. Remove the drive belt (see page 4-29).

6. Disconnect the alternator connector (A) and BLK wire (B) from the alternator.

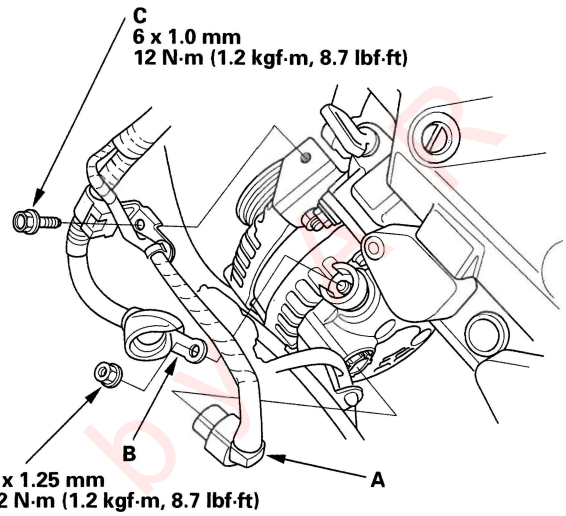

7. Remove the bolt (C) securing the harness bracket.

Protected by

8. Remove the mounting bolt (A) and alternator bracket mounting bolt (B), then remove the alternator.

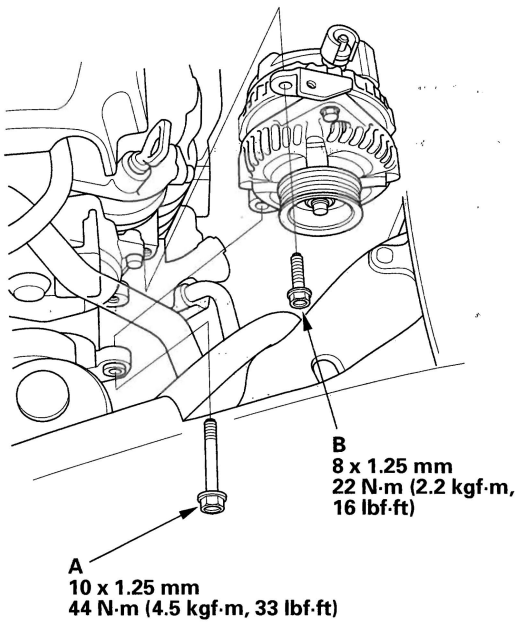

9. Install the alternator and drive belt in the reverse order of removal.
10. Connect the battery positive cable and negative cable to the battery.
11. Enter the anti-theft codes for the radio and the navigation system, then enter the customer's XM radio channel presets.
12. Set the clock.

Protected by AR

Alternator Overhaul

Exploded View

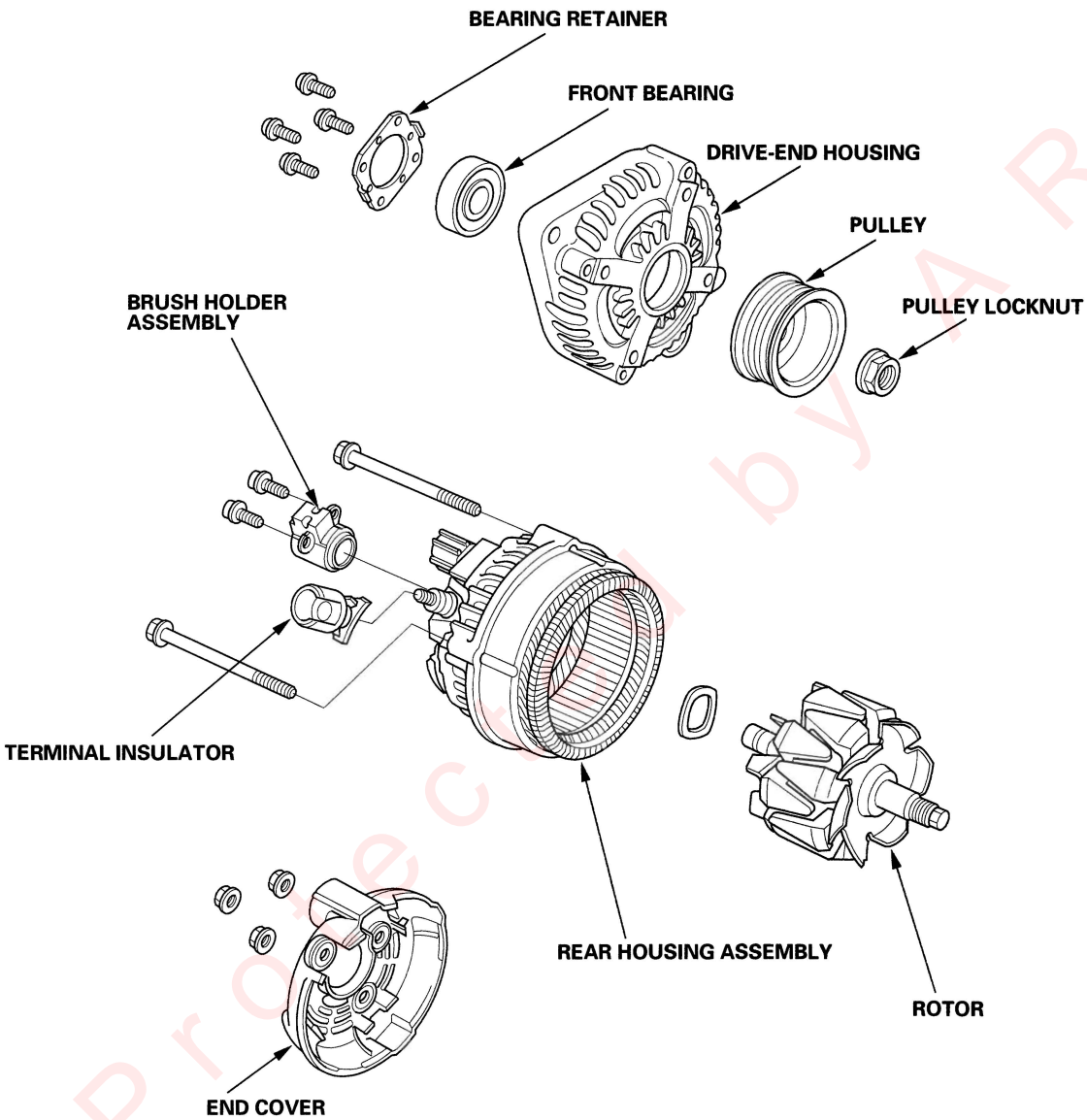

Protected by AR

Special Tools Required
- Handle driver 07749-0010000
- Attachment, 42 x 47 mm 07746-0010300

NOTE: Refer to the Exploded View as needed during this procedure.

1. Test the alternator and regulator before you remove them (see page 4-25).

2. Remove the alternator (see page 4-32).

3. If the front bearing needs replacing, remove the pulley locknut with a 10 mm wrench (A) and a 22 mm wrench (B). If necessary, use an impact wrench.

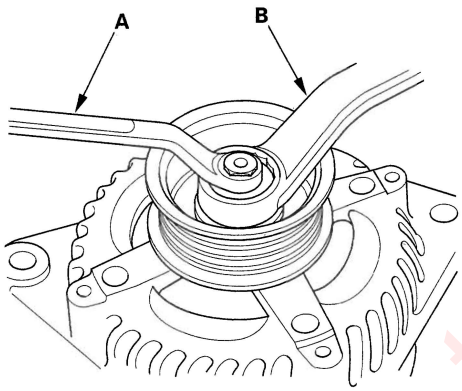

4. Remove the three flange nuts.

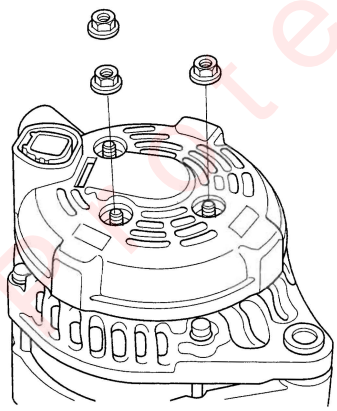

5. Remove the end cover (A) and the insulator (B).

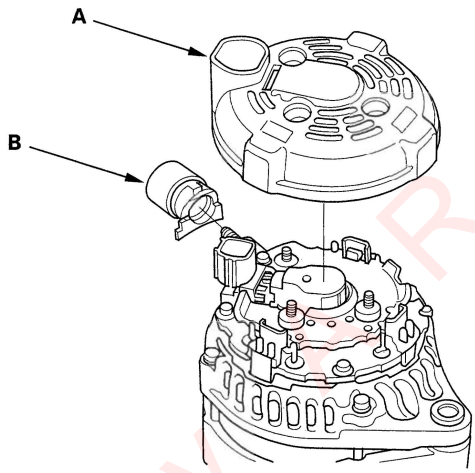

6. Remove the brush holder (A).

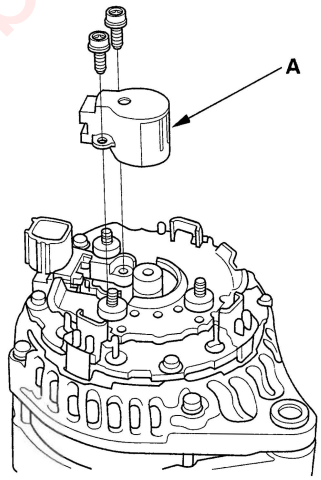

(cont'd)

Protected by

Alternator Overhaul (cont'd)

7. Remove the four bolts, then remove the rear housing assembly (A) and washer (B).

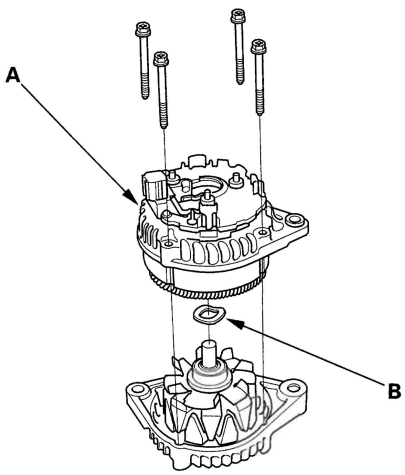

8. If you are not replacing the front bearing, go to step 13. Remove the rotor from the drive end housing.

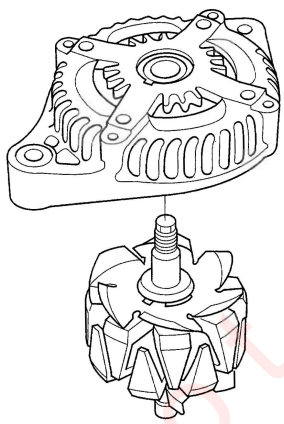

9. Inspect the rotor shaft for scoring, and inspect the bearing journal surface in the drive end housing for seizure marks.

   - If the rotor is damaged, replace the rotor assembly.
   - If the rotor is OK, go to step 10.

10. Remove the front bearing retainer plate.

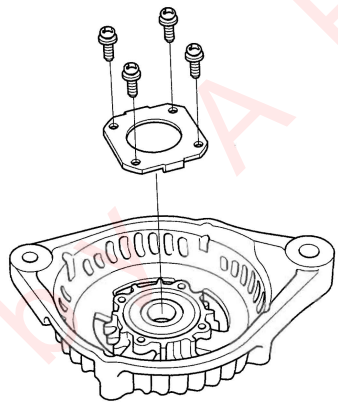

11. Drive out the front bearing with a brass drift and hammer.

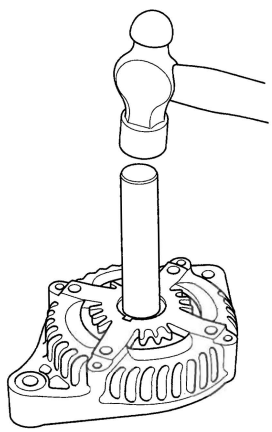

Protected by AR

12. With a hammer and special tools, install a new front bearing in the drive end housing.

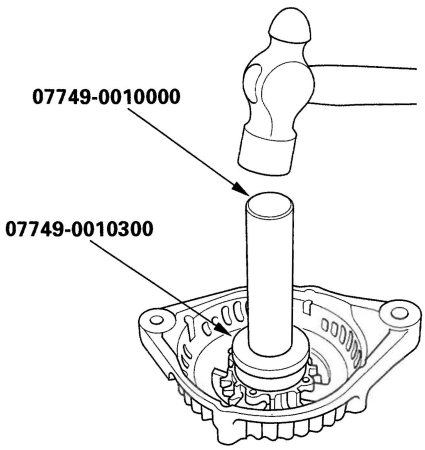

Alternator Brush Inspection

13. Measure the length of both brushes (A) with vernier calipers (B).

- If either brush is shorter than the service limit, replace the brush holder assembly.
- If brush length is OK, go to step 14.

Alternator Brush Length
Standard (New): 10.5 mm (0.41 in.)
Service Limit: 1.5 mm (0.06 in.)

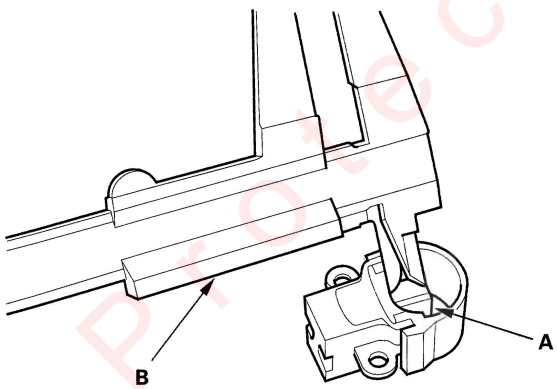

Rotor Slip Ring Test

14. Check that there is continuity between the slip rings (A).

- If there is continuity, go to step 15.
- If there is no continuity, replace the rotor assembly.

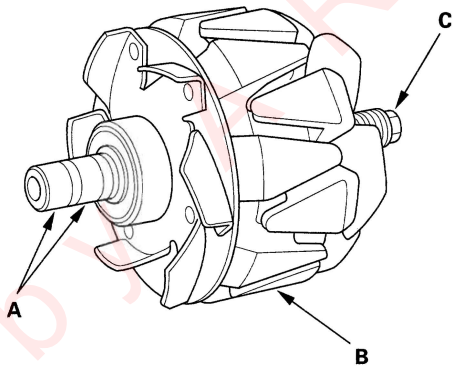

15. Check that there is no continuity between each slip ring and the rotor (B) and the rotor shaft (C).

- If there is no continuity, replace the rear housing assembly, and go to step 16.
- If there is continuity, replace the rotor assembly.

16. Assemble the alternator in reverse order of disassembly, and note these items:

- Be careful not to get any grease or oil on the slip rings.
- If you removed the pulley, tighten its locknut to 110 N·m (11.2 kgf·m, 81.0 lbf·ft) when you reinstall it.

Protected by KAR

Component Location Index

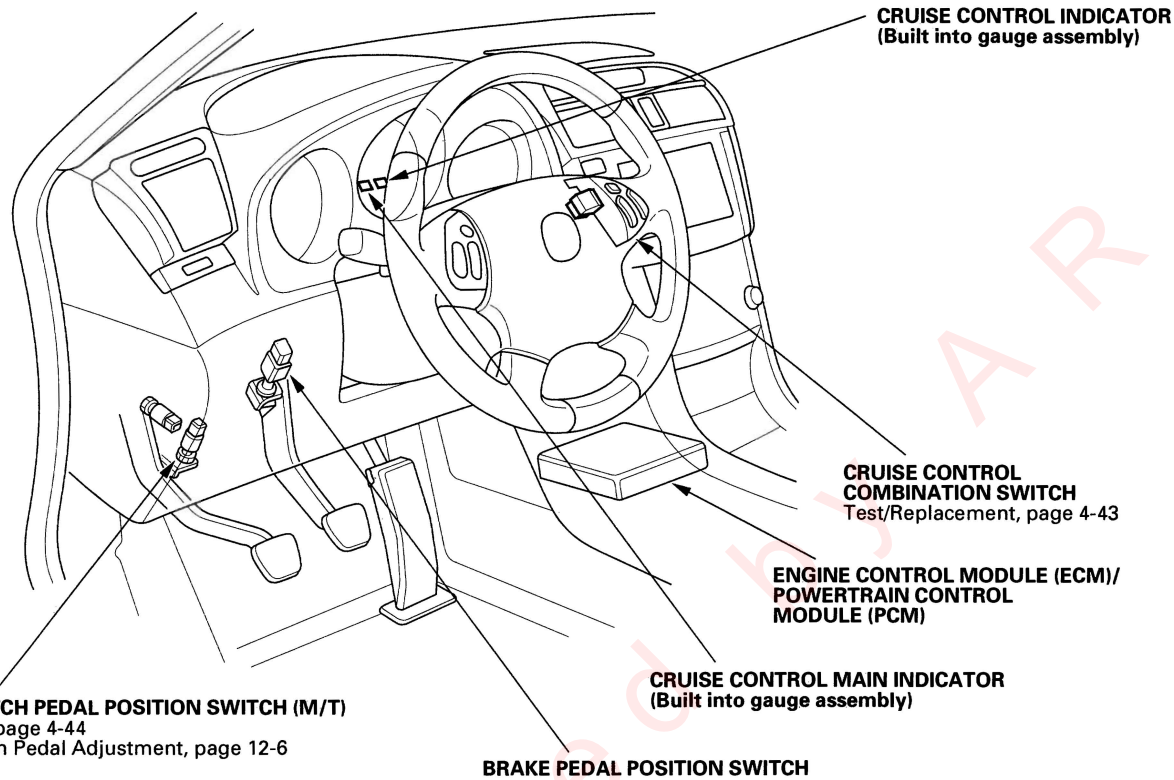

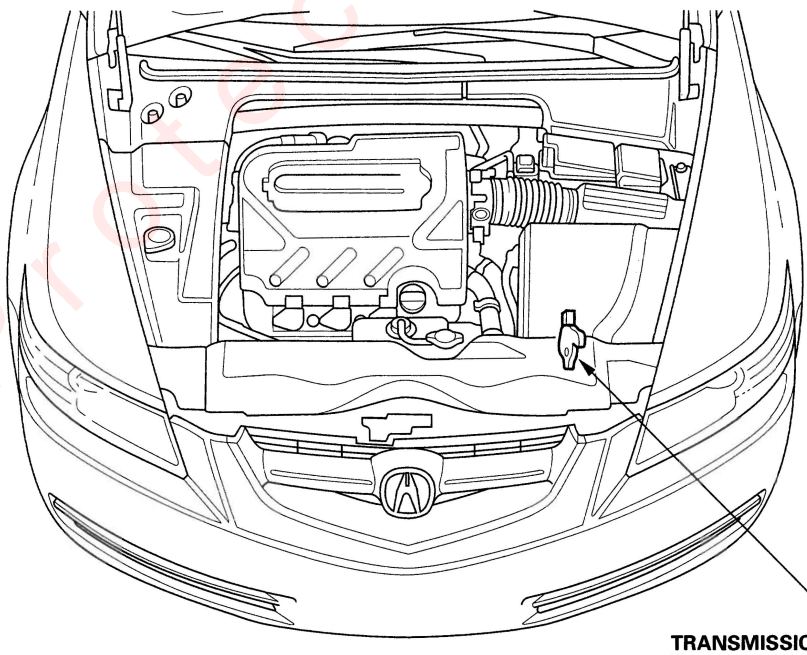

Protected by AR

Circuit Diagram

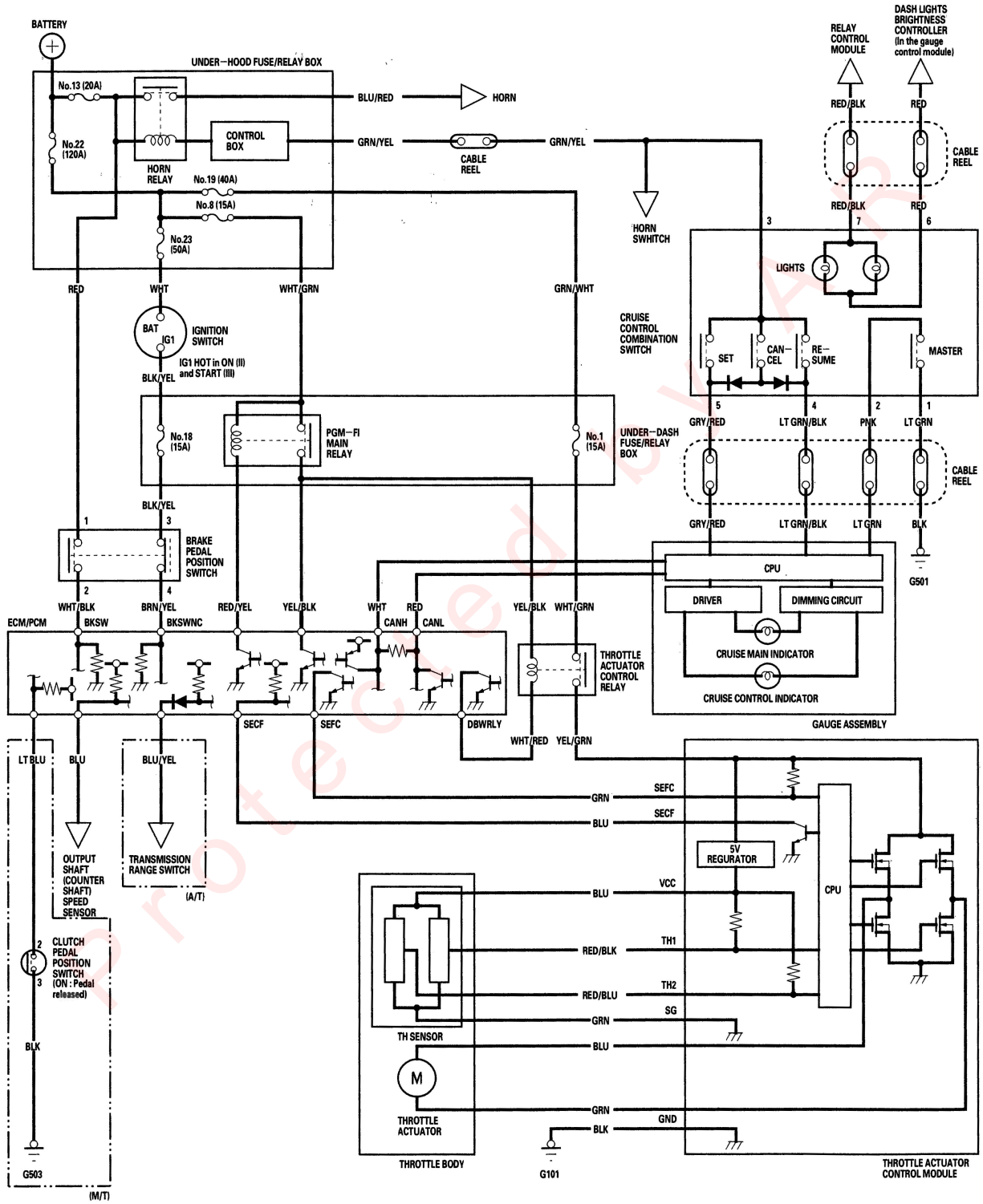

Protected by VAR

Symptom Troubleshooting Index

NOTE:
Before troubleshooting.
- Check for PGM-FI and body DTC's.
- Check the No. 13 (20A) fuse in the under-hood fuse/relay box, and the No. 18 (15A) fuse in the under-dash fuse/relay box.
- Check that the horn sounds.
- Check the speedometer to see if it works properly.

Symptom	Diagnostic procedure	Also check for
Cruise control cannot be set	Perform the cruise control input test (see page 4-41).	
Cruise control can be set, but cruise main indicator does not come on	Perform the cruise control input test (see page 4-41).	
Cruise control can be set, but cruise control indicator does not come on	Perform the cruise control input test (see page 4-41).	
Vehicle does not decelerate or accelerate accordingly when SET/RESUME/CANCEL button is pressed	Perform the cruise control input test (see page 4-41).	
Set speed does not cancel when brake pedal is pressed	Perform the cruise control input test (see page 4-41).	
Set speed does not cancel when MASTER button is turned OFF	Perform the cruise control input test (see page 4-41).	
Set speed does not cancel when CANCEL button is pressed	Perform the cruise control input test (see page 4-41).	
Set speed will not resume when RESUME button is pressed (with MASTER button ON, and set speed temporarily cancelled by pressing the brake pedal)	Perform the cruise control input test (see page 4-41).	
With the ignition switch ON (II), and the lighting switch ON, the cruise control combination switch illumination does not come on	Replace the cruise control combination switch illumination bulb(s) (see page 4-43).	

Protected by A R

Cruise Control Input Test

1. Connect the Honda Diagnostic System (HDS) to the data link connector (DLC).
2. Go to B-CAN System Diagnosis Test Mode A and check for DTC's.
3. Go to PGM-FI and check for DTC's.
4. Turn the ignition switch ON (II).
5. Perform the following tests while monitoring parameters in the PGM-FI DATA LIST with the HDS.

Signal to be tested	Test condition	Parameter: Desired result	Possible cause if result is not obtained
Brake switch signal	Brake pedal pressed, then released	CRUISE BRK SW should indicate OFF when the brake pedal is pressed and ON should be indicated when the brake pedal is released.	• Faulty brake pedal position switch • Blown No. 18 (15A) fuse in the under-dash fuse/relay box • An open in the wire between the ECM/PCM and the brake pedal position switch • A wire shorted to ground between the ECM/PCM and the brake pedal position switch
Clutch pedal position switch signal	Clutch pedal pressed, then released	SHIFT/CLUTCH SW should indicate OFF when the clutch pedal is pressed and ON should be indicated when the clutch pedal is released.	• Faulty clutch pedal position switch • An open in the wire between the ECM and the clutch pedal position switch • A wire shorted to ground between the ECM and the clutch pedal position switch • Poor ground G503
Transmission range switch signal	Shift in D or 2 position	TRANS RANGE SW should indicate OFF in P, R, and N position and ON in D and 2 position.	• Faulty transmission range switch • An open in the wire between the PCM and the transmission range switch • A wire shorted to ground between the PCM and the transmission range switch • Poor ground G101, G102
Cruise control master button signal	Cruise control master button ON and OFF	CRUISE MASTER SW should indicate ON when the cruise control master button is turned ON and OFF when the cruise control master button is turned OFF.	• Faulty cruise control combination switch • An open in the wire between the gauge assembly and the cruise control combination switch • A wire shorted to ground between the gauge assembly and the cruise control combination switch • An open in the wire between the cruise control combination switch and the ground
Set button signal	Set button pressed and released	CRUISE SET SW should indicate ON when the set button is pressed and OFF when the set button is released.	• Faulty cruise control combination switch • An open in the wire between the gauge assembly and the cruise control combination switch • A wire shorted to ground between the gauge assembly and the cruise control combination switch

(cont'd)

Cruise Control Input Test (cont'd)

Signal to be tested	Test condition	Parameter: Desired result	Possible cause if result is not obtained
Resume button signal	Resume button pressed and released	CRUISE RESUME SW should indicate ON when the resume button is pressed and OFF when the resume button is released.	• Faulty cruise control combination switch • An open in the wire between the gauge assembly and the cruise control combination switch • A wire shorted to ground between the gauge assembly and the cruise control combination switch
Cancel button signal	Cancel button pressed and released	CRUISE CANCEL SW should indicate ON when the cancel button is pressed and OFF when the cancel button is released.	• Faulty cruise control combination switch
Cruise control indicator signal	Start the engine, turn the cruise control master button on and drive the vehicle to speeds over 25 mph (40 km/h) with the cruise control set and cancel the cruise control	CRUISE LIGHT should indicate ON when the cruise control is set and OFF when the cruise control is cancelled.	• Faulty gauge assembly • A burnt cruise control indicator bulb

Protected by A R

Cruise Control Combination Switch Test/Replacement

1. Remove the driver's airbag (see page 23-128).
2. Remove the two screws, then disconnect the connector, and remove the switch.

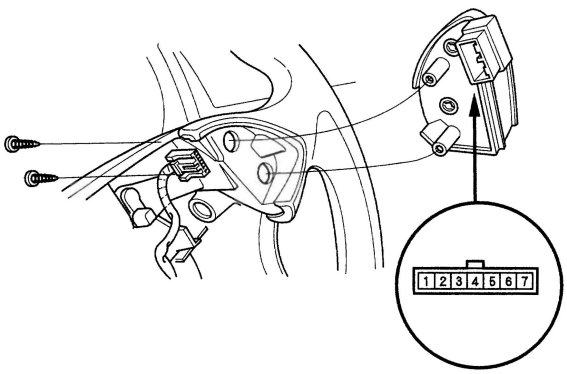

Terminal side of male terminals

3. Check for continuity between the terminals in each switch position according to the table.
   - If there is continuity, and it matches the table, but switch failure occurred on the cruise control unit input test, check and repair the wire harness on the switch circuit.
   - If there is no continuity in one or both positions, replace the switch.

Terminal / Position	1	2	3	4	5
MASTER (ON)	○—○				
MASTER (OFF)					
SET (ON)			○		○
RESUME (ON)			○	○	
CANCEL (ON)			○	▶ ○	○
				▶ ○	

Cruise Control Combination Switch Illumination Bulb Replacement

1. Remove the driver's airbag (see page 23-128).
2. Remove the two screws, then disconnect the connector, and remove the switch.

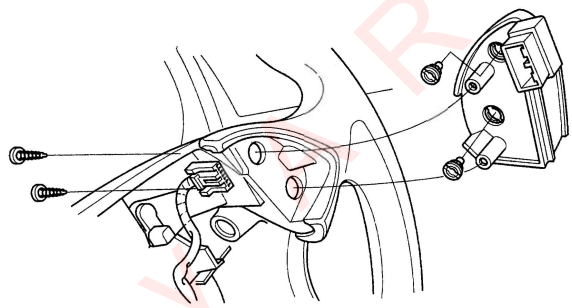

3. Replace the illumination bulb.
4. Install in the reverse order of removal.

Protected by ARR

Clutch Pedal Position Switch Test

1. Disconnect the 3P connector from the clutch pedal position switch (A).

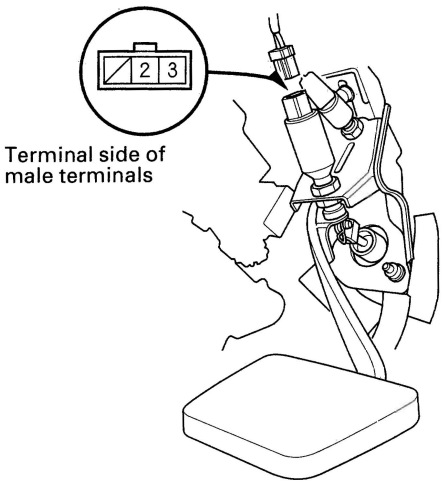

2. Remove the clutch pedal position switch.

3. Check for continuity between the terminals according to the table.

   - If the continuity is not as specified, replace the clutch pedal position switch.
   - If OK, install the clutch pedal position switch and adjust the pedal height (see page 12-6).

Terminal / Clutch Pedal Position Switch	1	2	3
PRESSED			
RELEASED		O	O

Protected by AR

Engine Mount Control System

Component Location Index

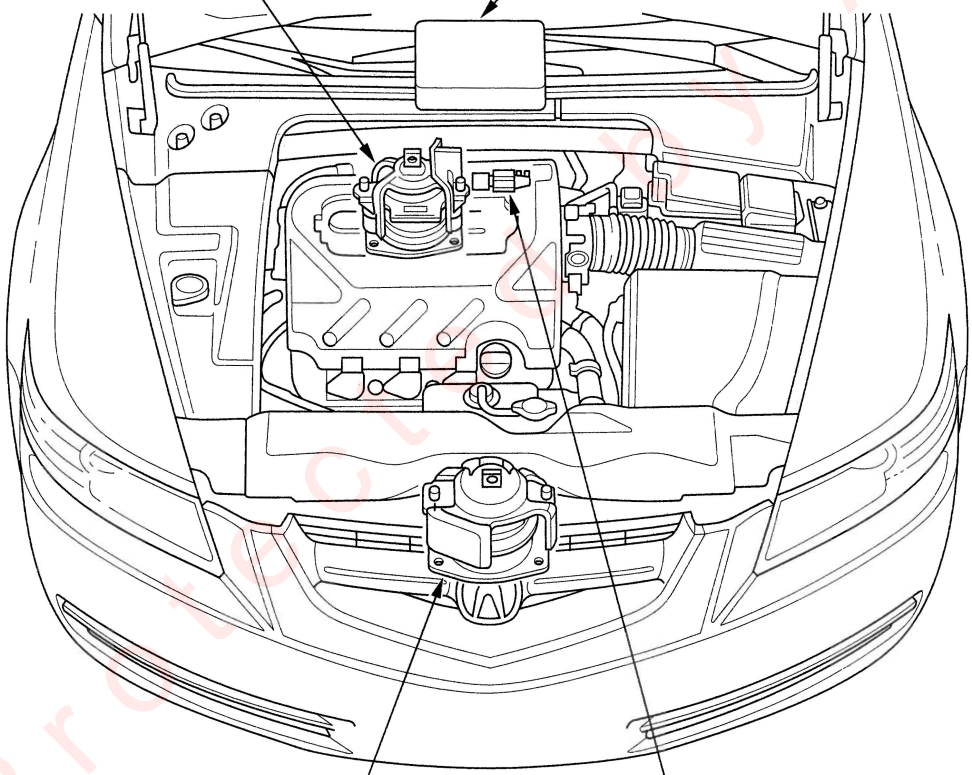

Protected by AR

Engine Mount Control System

Circuit Diagram

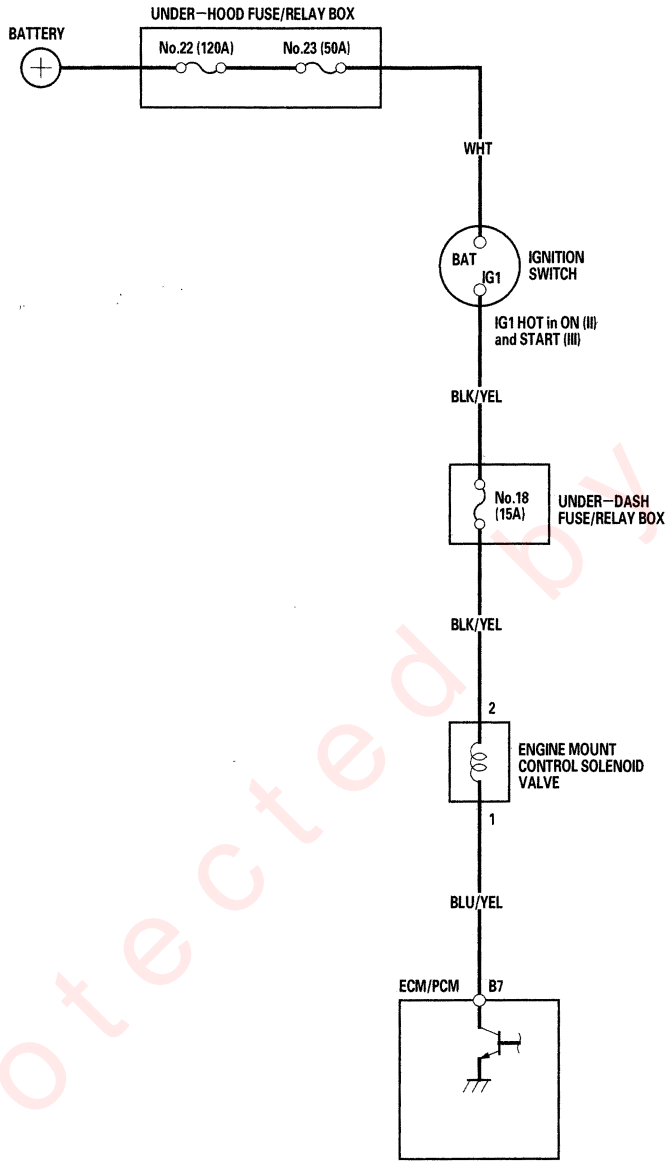

Protected by AR

Troubleshooting

Special Tools Required
Vacuum pump/gauge, 0—30 in.Hg
A973X-041-XXXXX

NOTE: Check the vacuum hoses and lines for damage and proper connections before troubleshooting.

Follow this procedure if the engine vibrates excessively when idling.

1. Start the engine and let it idle (see page 11-238).
2. Raise the engine speed from idling to 2,000 rpm.
3. Check the MOUNT CTRL SOL in the PGM-FI DATA LIST with the Honda Diagnostic System (HDS).

   Is ON indicated at idling and OFF indicated at 2,000 rpm?

   YES—Go to step 4.

   NO—Update the engine control module (ECM) / powertrain control module (PCM) if it does not have the latest software (see page 11-6), or substitute a known-good ECM/PCM (see page 11-7), then recheck. If the engine mount control system works properly, and the ECM/PCM was updated, the troubleshooting is complete. If the ECM/PCM was substituted, replace the original ECM/PCM (see page 11-171).■
4. Shift the transmission to park (A/T), or neutral (M/T) position.
5. Disconnect the engine mount control solenoid valve 2P connector from the engine mount control solenoid valve.
6. Measure voltage between engine mount control solenoid valve 2P connector terminal No. 2 and body ground.

   ENGINE MOUNT CONTROL SOLENOID VALVE 2P CONNECTOR

   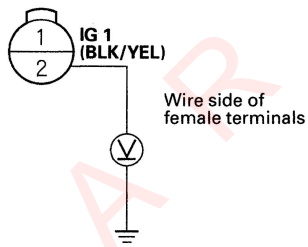

   Is there battery voltage?

   YES—Go to step 7.

   NO—Repair an open in the wire between engine mount control solenoid valve and No. 18 (15A) fuse in the under-dash fuse/relay box.■
7. Measure voltage between engine mount control solenoid valve 2P connector terminals No. 1 and No. 2, with the engine at idle.

   ENGINE MOUNT CONTROL SOLENOID VALVE 2P CONNECTOR

   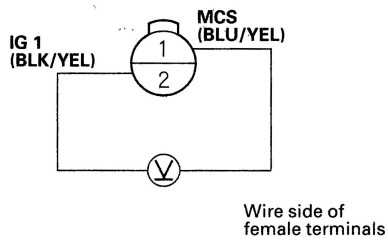

   Is there battery voltage?

   YES—Go to step 8.

   NO—Repair an open in the wire between ECM/PCM (B7) and the engine mount control solenoid valve 2P connector. If the wire is OK, update the ECM/PCM if it does not have the latest software (see page 11-6), or substitute a known-good ECM/PCM (see page 11-7), and recheck. If the engine mount control system works properly, and the ECM/PCM was updated, the troubleshooting is complete. If the ECM/PCM was substituted, replace the original ECM/PCM (see page 11-171).■

(cont'd)

Protected by AR

Troubleshooting (cont'd)

8. Raise the engine speed above 1,000 rpm.

9. Measure voltage between engine mount control solenoid valve 2P connector terminals No. 1 and No. 2.

ENGINE MOUNT CONTROL SOLENOID VALVE 2P CONNECTOR

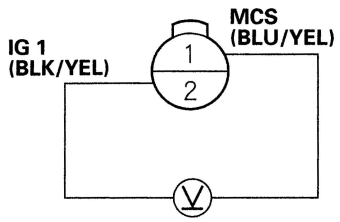

Wire side of female terminals

Is there battery voltage?

YES—Repair a short to body ground in the wire between ECM/PCM (B7) and the engine mount control solenoid valve. If the wire is OK, update the ECM/PCM if it does not have the latest software (see page 11-6), or substitute a known-good ECM/PCM (see page 11-7), and recheck. If the engine mount control system works properly, and the ECM/PCM was updated, the troubleshooting is complete. If the ECM/PCM was substituted, replace the original ECM/PCM (see page 11-171).■

NO—Go to step 10.

10. Disconnect the vacuum hose (A) that is closest to the solenoid connector from the engine mount control solenoid valve (B), and connect a vacuum pump/gauge to the hose. Apply about 20 in.Hg of vacuum, and wait for 20 seconds.

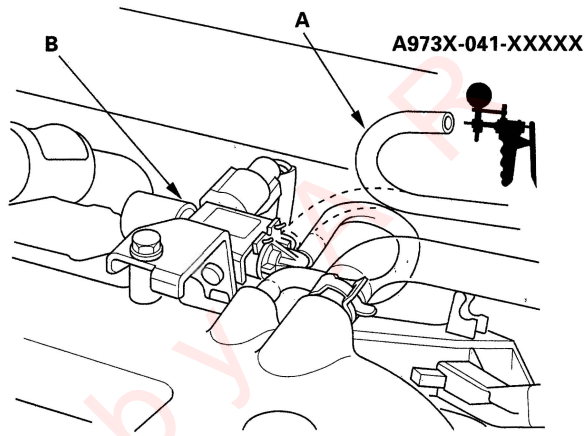

Does the engine mounts hold vacuum?

YES—Go to step 11.

NO—Either the vacuum hose or one of the engine mount has a vacuum leak. Repair as needed.■

Protected by MP

11. Release the vacuum, then apply vacuum again.

    Is there a noticeable change in idle smoothness with and without vacuum applied?

    YES – Go to step 12.

    NO – Replace the front engine mount and/or rear engine mount. ■

12. Connect a vacuum pump/gauge to the engine mount control solenoid valve port (A) that is closest to the solenoid connector.

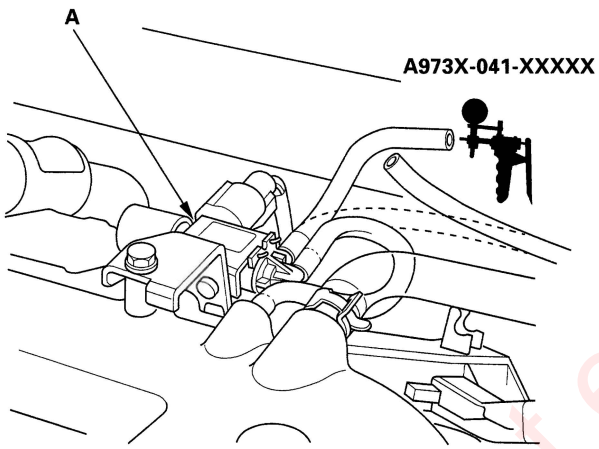

    Is there manifold vacuum at idle, and a decrease in manifold vacuum when you raise the engine speed above 1,000 rpm?

    YES – The system is OK. ■

    NO – Replace the engine mount control solenoid valve. ■

Protected by AR

Engine Mechanical

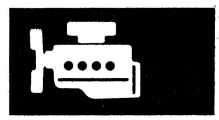

Engine Assembly
- Engine Removal 5-2
- Engine Installation 5-12
- Engine Mount Replacement 5-23

Cylinder Head **6-1**

Engine Block **7-1**

Engine Lubrication **8-1**

Intake Manifold and Exhaust System **9-1**

Protected by A R

Engine Assembly

Engine Removal

Special Tools Required
- Front subframe adapter VSB02C000016
- Engine support hanger, A and Reds AAR-T-12566 (available through Honda Tool and Equipment program, 888-424-6857)
- Engine hanger balance bar VSB02000019

NOTE:
- Use fender covers to avoid damaging painted surfaces.
- To avoid damage, unplug the wiring connectors carefully while holding the connector portion.
- Mark all wiring and hoses to avoid misconnection. Also, be sure that they do not contact other wiring, hoses, or interfere with other parts.

1. Make sure you have the anti-theft codes for the radio and navigation system, then write down the XM radio channel presets. Make sure the ignition switch is OFF.

2. Disconnect the support struts from both sides of the pivot ball (bolted to the hood). Secure the hood (A) in a vertical position. Remove the right side pivot ball and install it into the lower threaded hole (B), then reattach the support strut.

   NOTE: Do not attempt to close the hood with the support strut in the vertical position, as it will damage the support strut and hood.

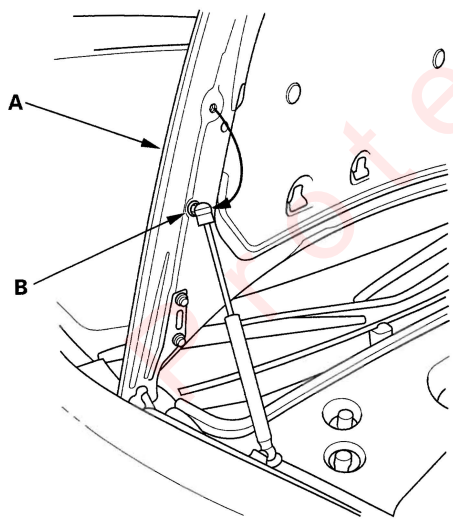

3. Remove the left side engine compartment cover (A) and the left rear engine compartment cover (B).

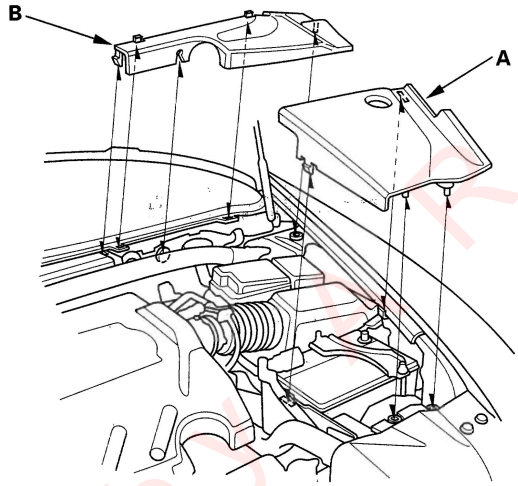

4. Remove the right side engine compartment cover (A), then remove the right rear engine compartment cover (B).

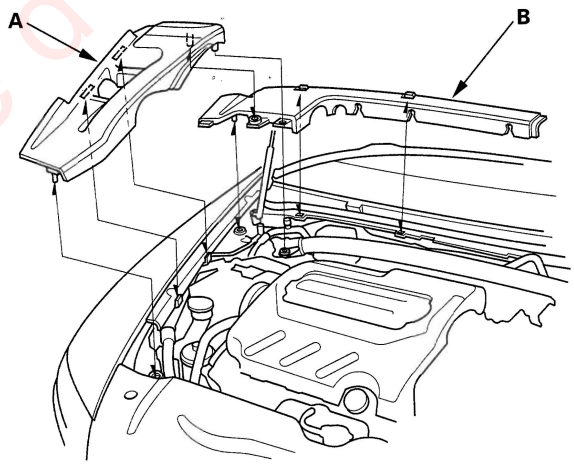

Protected by

5. Remove the intake manifold cover.

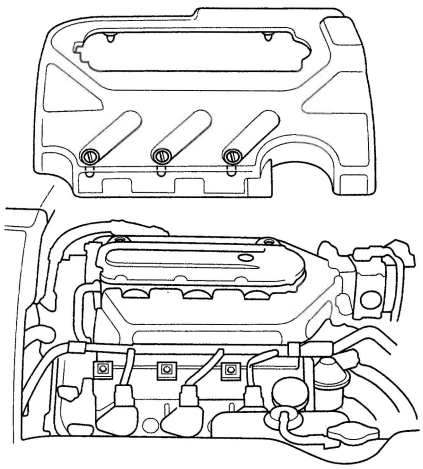

6. Drain the power steering system fluid (see page 17-12).

7. Disconnect the negative cable from the battery, then disconnect the positive cable.

8. Remove the battery.

9. Remove the air cleaner housing (see page 11-273).

10. Remove the resonator (see page 11-274).

11. Remove the harness clamp (A).

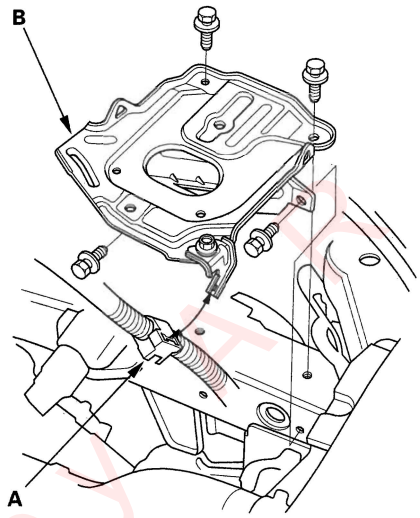

12. Remove the four bolts, then remove the battery base (B).

13. Remove the battery cables (A) from the under-hood fuse/relay box, then disconnect the harness connector (B).

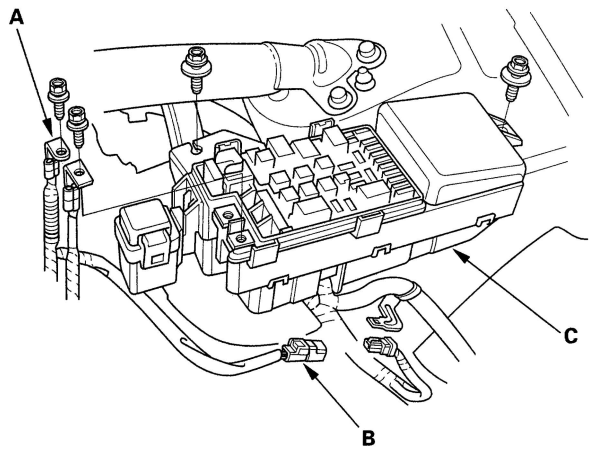

14. Remove the under-hood fuse/relay box (C) from the body.

(cont'd)

Protected by AR

Engine Removal (cont'd)

15. Remove the harness clamp (A), and remove the two 6 mm bolts (B), then remove the strut brace (C).

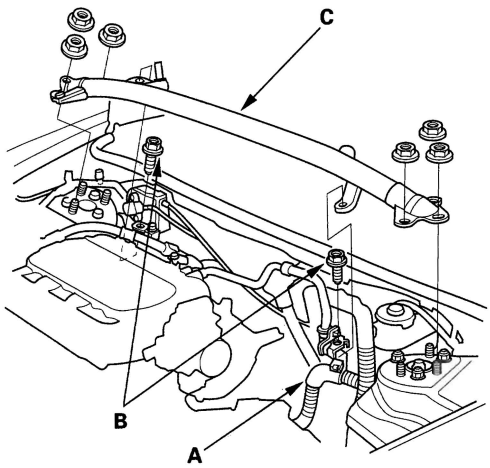

16. Relieve fuel pressure (see page 11-245).

17. Remove the brake booster vacuum hose (A), evaporative emission (EVAP) canister hose (B).

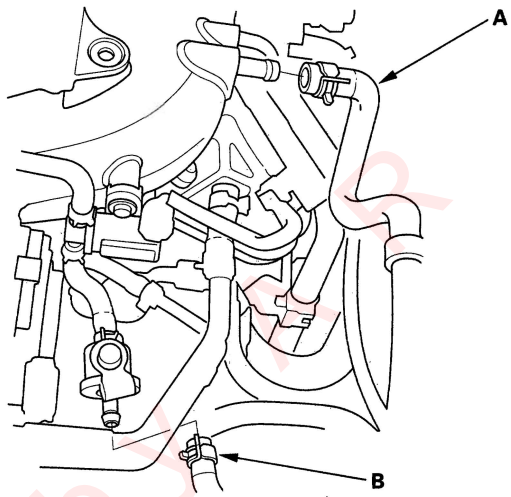

18. Remove the harness clamp (A), and disconnect the engine wire harness connectors (B) on the left side of the engine compartment.

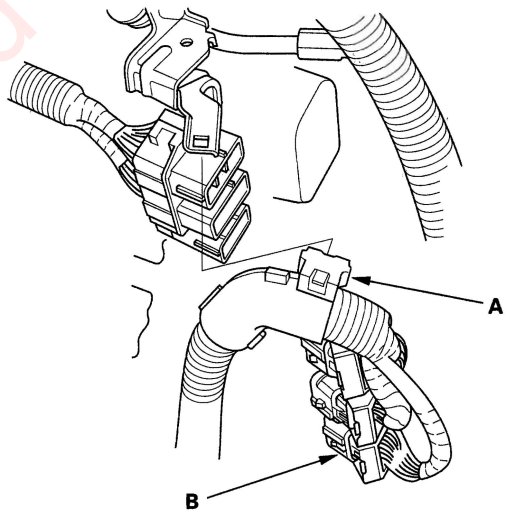

Protected by

19. Remove the three bolts securing the shift cable holder, then remove the shift cable and select cable. Do not bend the cables excessively (M/T) (see step 17 on page 13-16).

20. Remove the clutch slave cylinder and clutch line bracket mounting bolt. Do not operate the clutch pedal once the slave cylinder has been removed (M/T) (see step 19 on page 13-16).

21. Remove the drive belt (see page 4-29).

22. Remove the power steering (P/S) pump inlet hose (A) and P/S pump outlet hose (B) from the P/S pump.

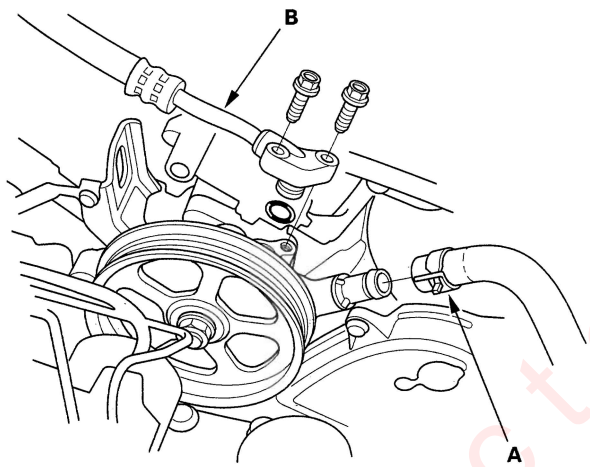

23. Remove the P/S hose from the clamp.

24. Remove the steering joint cover (A).

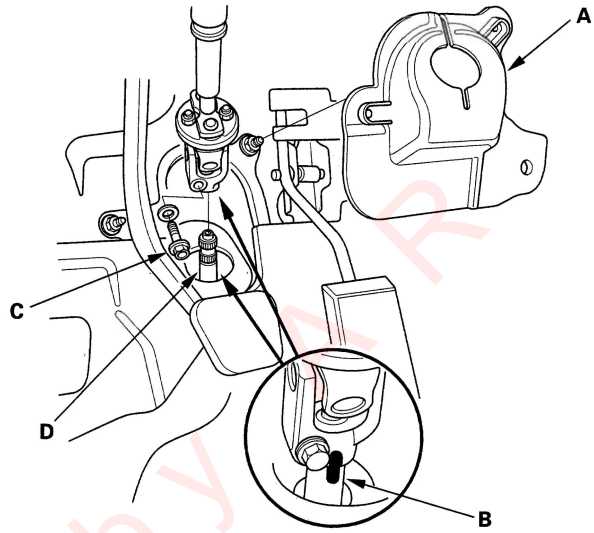

25. Lock the steering wheel. Make a reference mark (B) across the steering joint and steering gearbox pinion shaft. Remove the steering joint bolt (C), and disconnect the steering joint from the steering gearbox pinion shaft (D). To prevent damage to the cable reel, do not turn the steering wheel once the steering joint has been removed.

(cont'd)

Protected by

Engine Removal (cont'd)

26. Disconnect the fan motor connector (A) and compressor clutch connector (B), and remove the reserve tank (C). Wipe up any spilled engine coolant immediately.

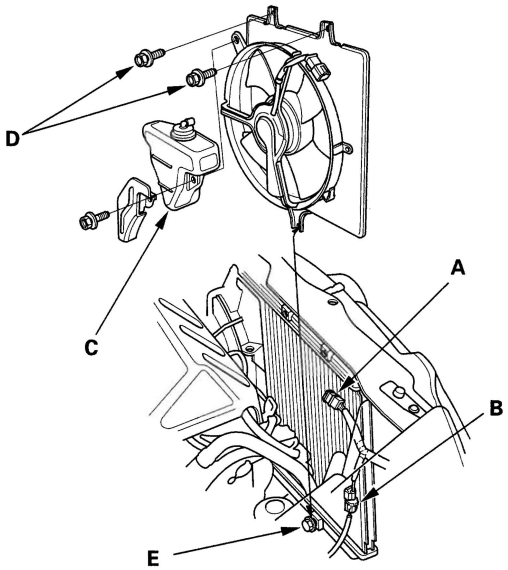

27. Remove the two bolts (D), loosen the bottom bolt (E), then remove the condenser fan shroud.

28. Remove the four bolts securing the A/C compressor.

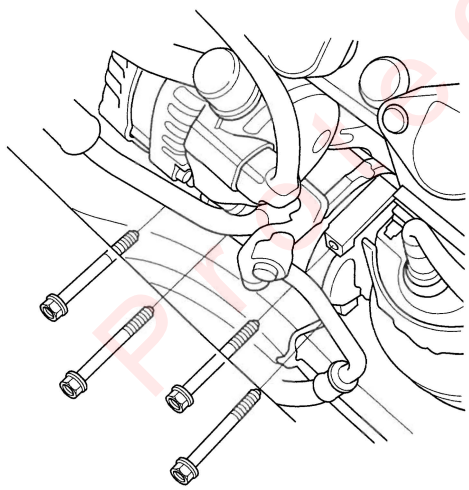

29. Remove the radiator cap.

30. Raise the vehicle on the hoist to full height.

31. Remove the front tires/wheels.

32. Remove the engine under cover.

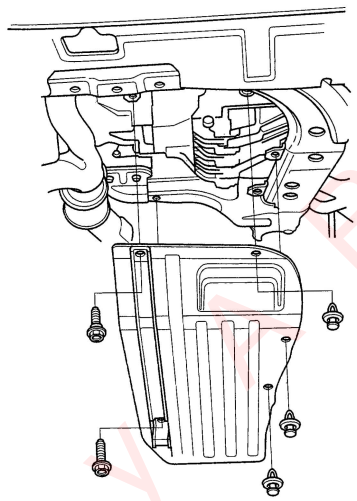

33. Remove the splash shield.

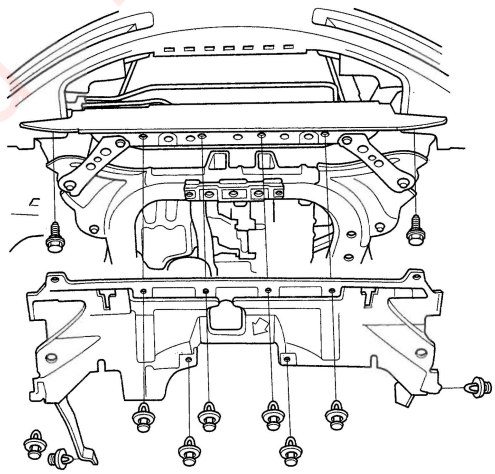

34. Loosen the drain plug in the radiator, and drain the engine coolant (see page 10-6).

35. Drain the transmission fluid:

- Manual transmission (see page 13-10).
- Automatic transmission (see page 14-204).

36. Drain the engine oil (see page 8-6).

37. Disconnect the stabilizer links (see page 18-22).

38. Remove the damper fork (see page 18-25).

39. Disconnect the tie-rod end ball joints (see step 10 on page 17-30).

40. Disconnect the suspension lower arm ball joints (see page 18-20).

41. Remove the driveshafts (see step 11 on page 16-5). Coat all precision-finished surfaces with clean engine oil. Tie plastic bags over the driveshaft ends.

42. Remove the shift cable. Do not bend the shift cable excessively (A/T) (see step 48 on page 14-212).

43. Remove exhaust pipe A.

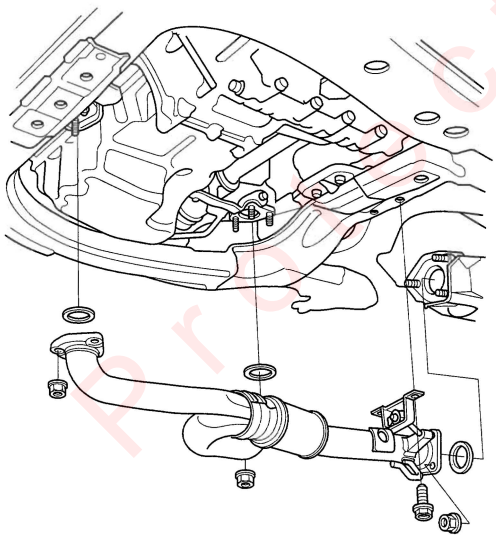

44. Remove the P/S hose (A).

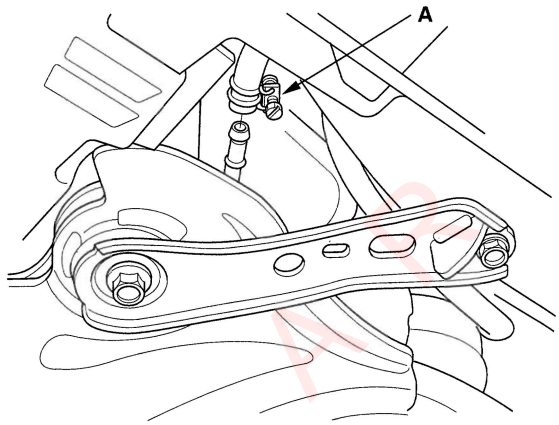

45. Disconnect the power steering pressure switch connector.

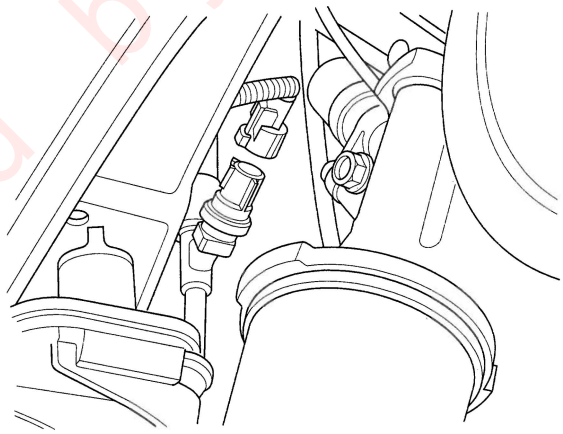

Protected by AP

(cont'd)

Engine Removal (cont'd)

46. Remove the nuts securing the transmission lower front mount and transmission lower rear mount.

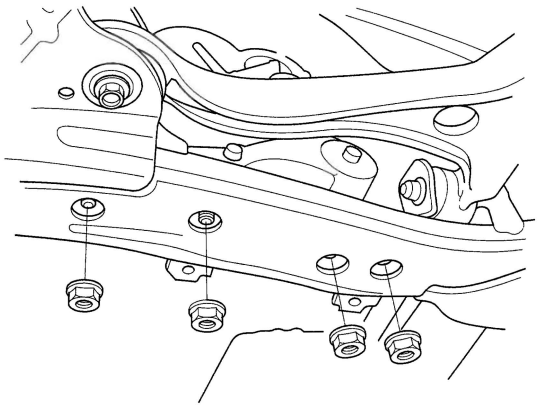

47. Lower the vehicle on the hoist.

48. Remove the upper radiator hose (A) and lower radiator hose (B).

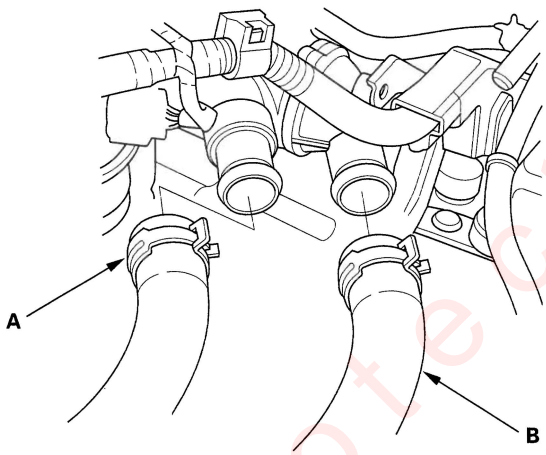

49. Remove the heater hoses.

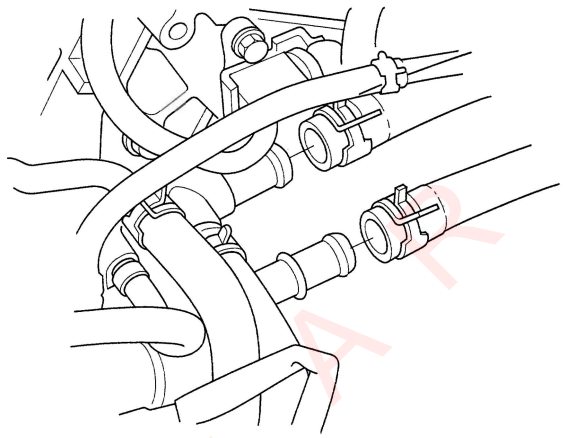

50. Remove the two bolts securing the side engine mount bracket.

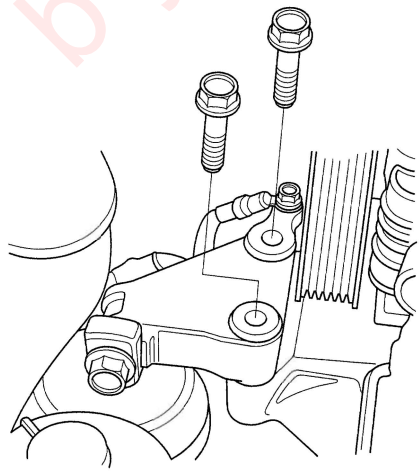

Protected by AR

51. Lift and support the engine with engine hanger (A) and engine balancer bar (B).
Attach the front arm (C) to the front cylinder head with a spacer (D) and the connector bracket bolt (10 x 1.25 mm) (E). Attach the rear arm (F) to the rear cylinder head with the harness clamp bracket bolt (8 x 1.25 mm) (G).

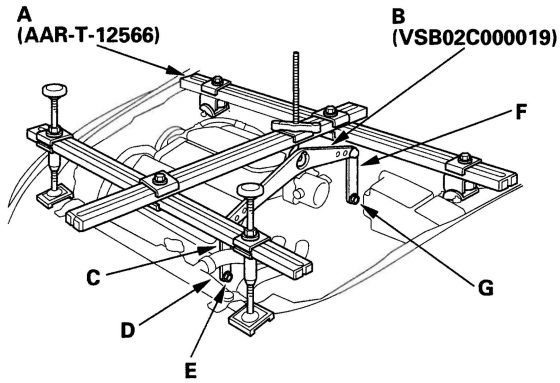

52. Remove the ground cable (A).

M/T:

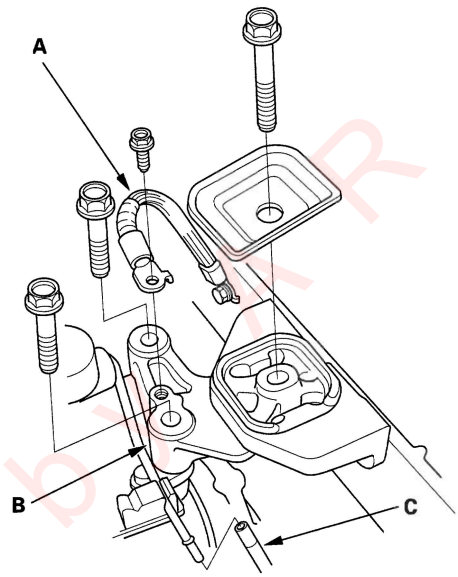

A/T:

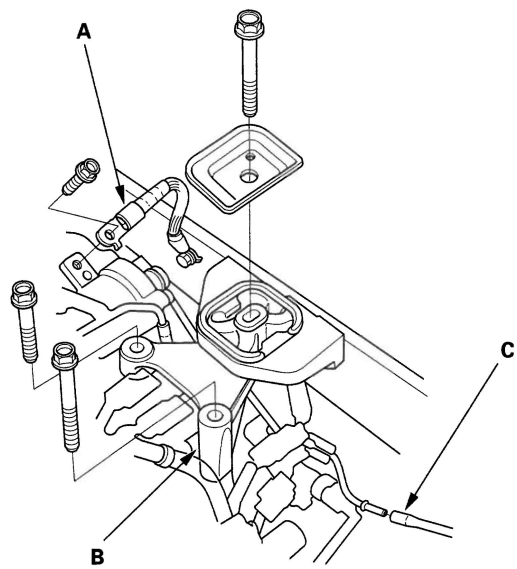

53. Remove the transmission upper mount bracket (B), and remove the vacuum hose (C).

(cont'd)

Protected by KR

Engine Removal (cont'd)

54. Remove the front mount stop (A), then remove the front mount bolt (B).

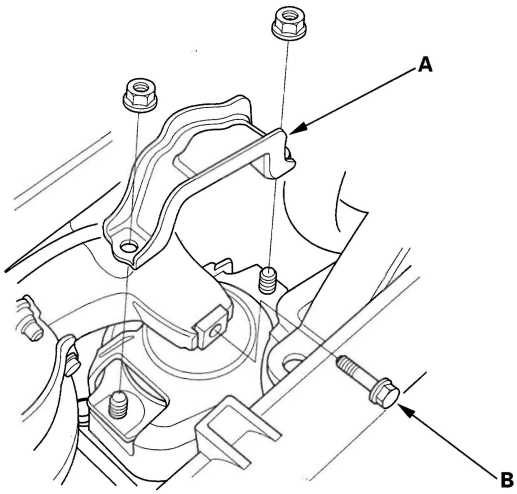

55. Remove the two bolts securing the rear engine damper (M/T).

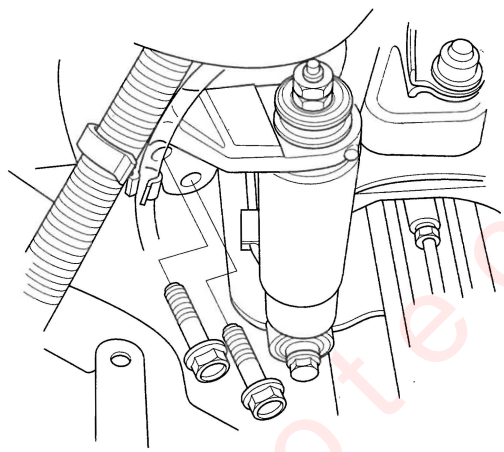

56. Remove the rear mount stop (A), then remove the rear mount bolt (B).

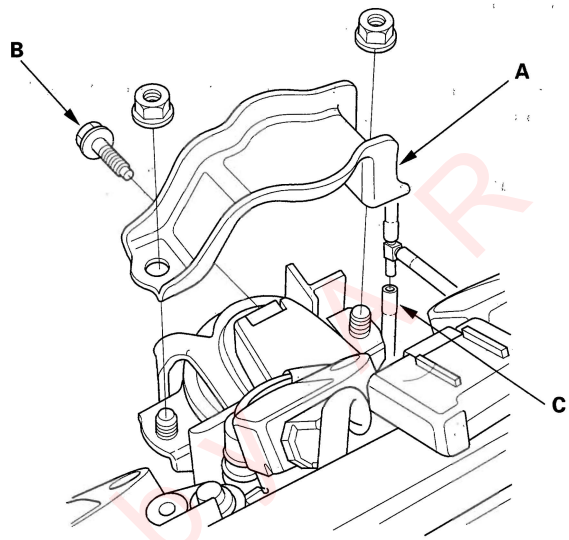

57. Remove the vacuum hose (C).

58. Remove the two bolts securing the shift cable bracket (M/T).

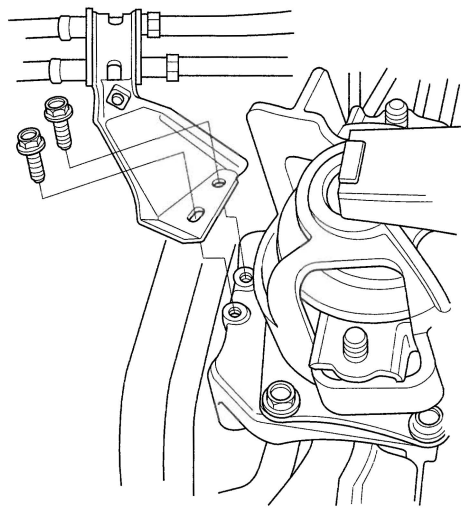

Protected by

59. Make sure the hoist brackets are positioned properly. Raise the vehicle on the hoist to full height.

60. Make the appropriate reference lines (A) at both ends of the subframe (B) that line up with the edge (C) of the stiffeners (D).

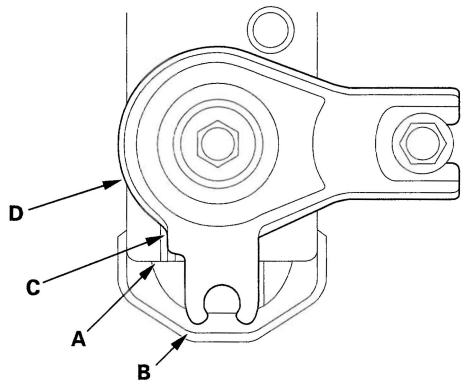

61. Attach the special tool to the subframe by hanging the belt (A) over the front of the subframe (B), then secure the belt with its stop (C).

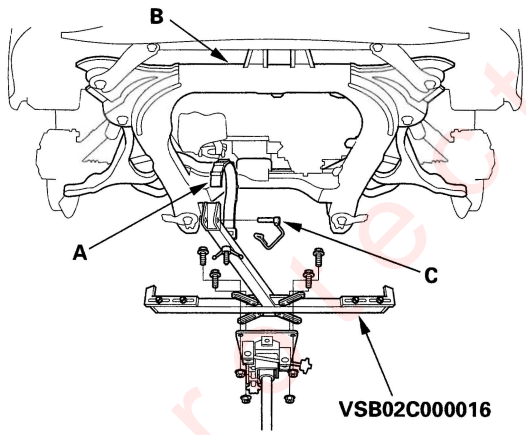

62. Raise the jack and line up the slots in the special tool arms with the bolt holes on the jack base, then securely attach them with four bolts.

63. Remove the subframe mid-mounts.

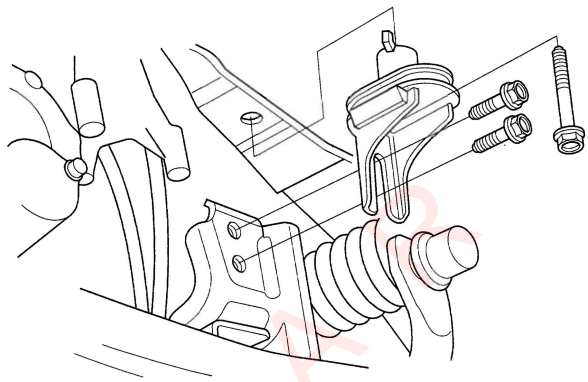

64. Remove the subframe.

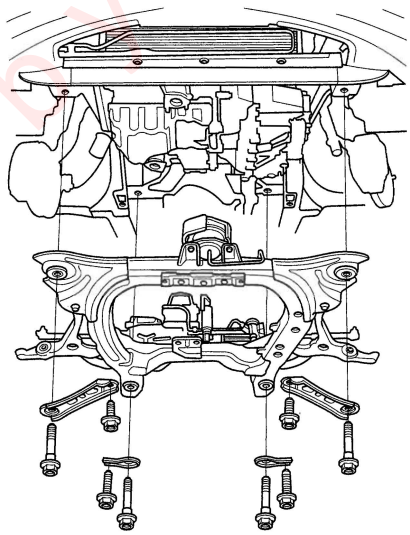

65. Check that the engine/transmission is completely free of vacuum hoses, fuel and coolant hoses, and electrical wiring.

66. Lower the vehicle and securely support the engine and transmission assembly.

67. When the engine and transmission is securely supported, and there is no tension on the engine support hanger, remove the engine hanger from the engine.

68. Slowly raise the vehicle about 150 mm (6 in.). Check once again that all hoses and wires are disconnected from the engine/transmission assembly.

69. Raise the vehicle all the way.

70. Remove the engine/transmission assembly from under the vehicle.

Protected by ...

Engine Installation

Special Tools Required
- Front subframe adapter VSB02C000016
- Engine support hanger, A and Reds AAR-T-12566 (available through Honda Tool and Equipment program, 888-424-6857)
- Engine hanger balance bar VSB02000019

1. Install the accessory brackets and tighten their bolts and nuts to the specified torques.

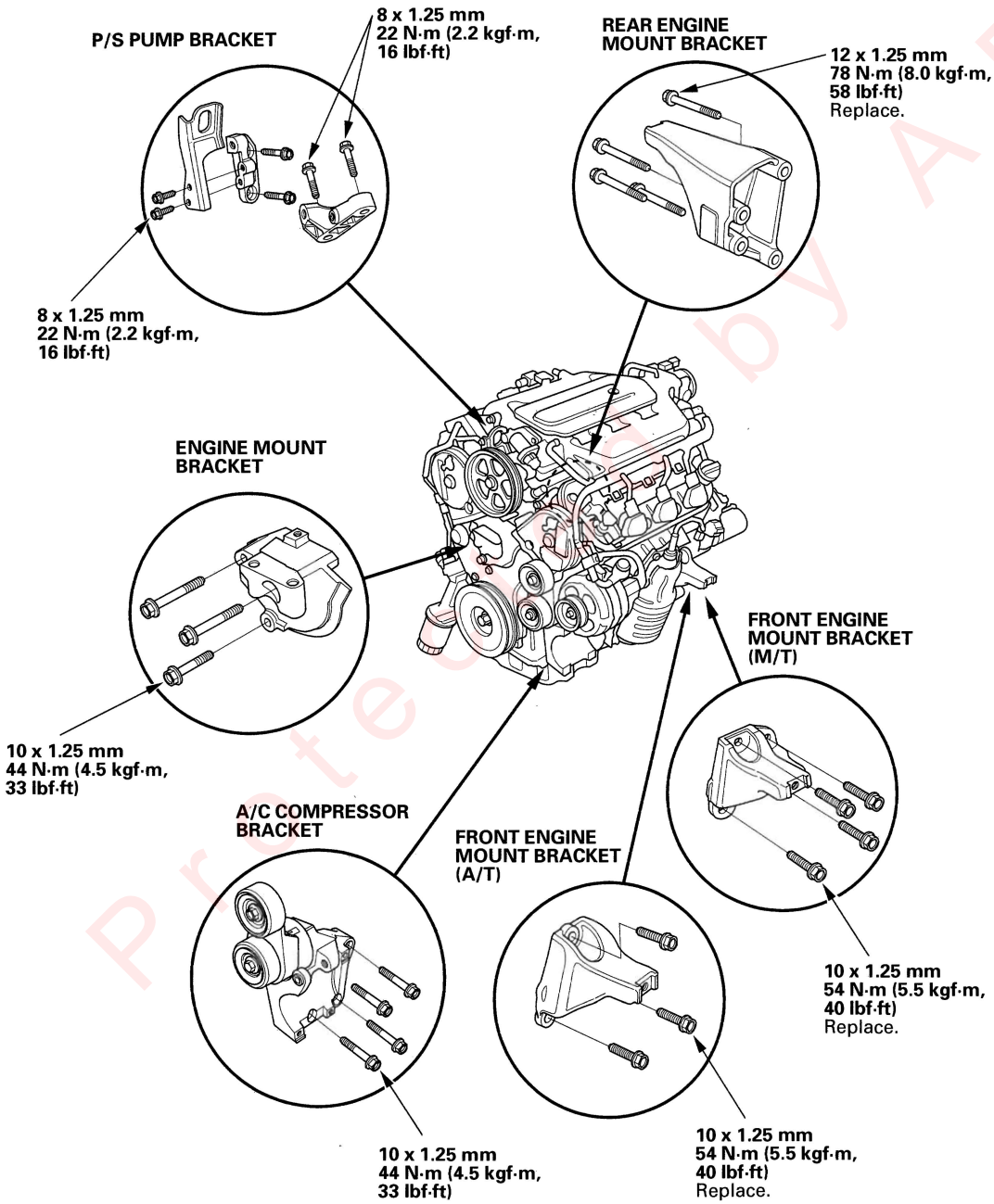

Protected by AR

2. Position the engine/transmission assembly under the vehicle. Lift and support the engine with engine hanger (A) and engine balancer bar (B). Attach the front arm (C) to the front cylinder head with a spacer (D) and the connector bracket bolt (10 x 1.25 mm) (E). Attach the rear arm (F) to the rear cylinder head with the harness clamp bracket bolt (8 x 1.25 mm) (G). Lift the engine into position in the vehicle.

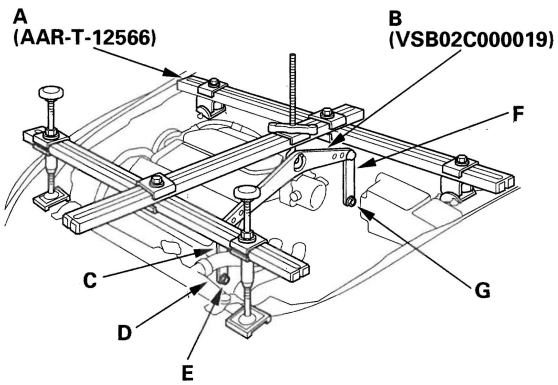

NOTICE

Reinstall all mounting bolts/support nuts in the sequences given. Failure to follow this may cause excessive noise and vibration, and reduce bushing life.

3. Attach the special tool to the subframe by hanging the belt (A) over the front of the subframe (B), then secure the belt with its stop (C). Raise the subframe up to the body with a jack.

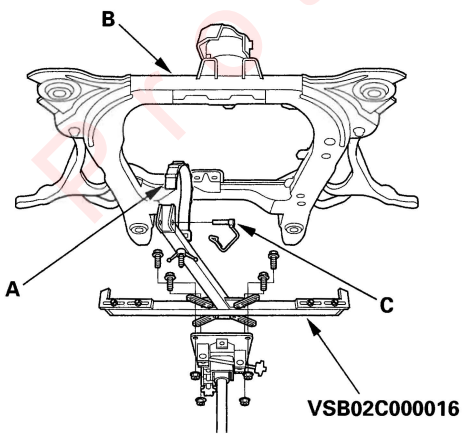

4. Loosely install the four subframe mounting bolts (A) and four 12 x 1.25 mm bolts (B), (C) with the stiffeners.

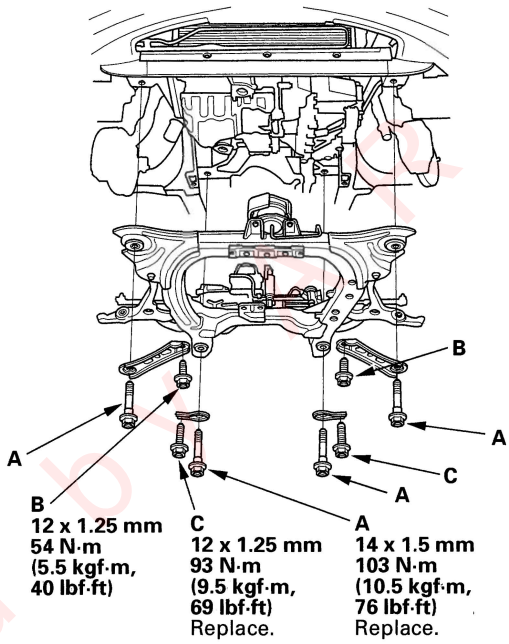

5. Loosely install the subframe mid mounts, then remove the special tool.

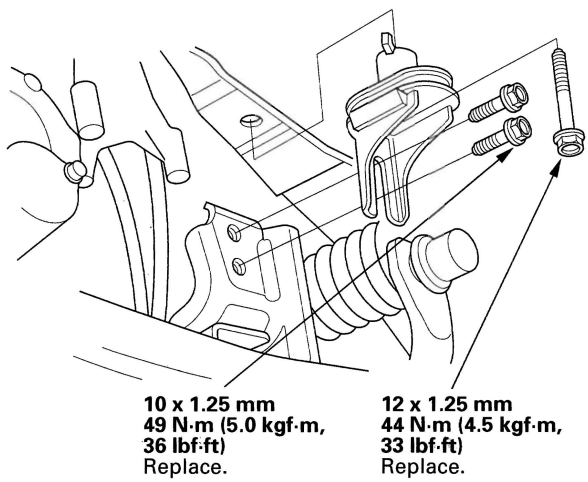

(cont'd)

Protected by

Engine Installation (cont'd)

6. Align the reference marks (A) with edge (B) of both rear stiffener (C), and tighten the rear subframe mounting bolts, then front bolts, and tighten the stiffener bolts to the specified torque.

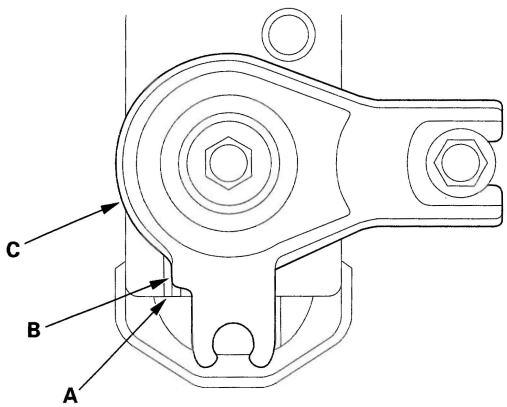

7. Tighten the bolts securing the subframe mid-mounts.

8. Tighten the nuts securing the transmission lower front mount and trarnsmission lower rear mount.

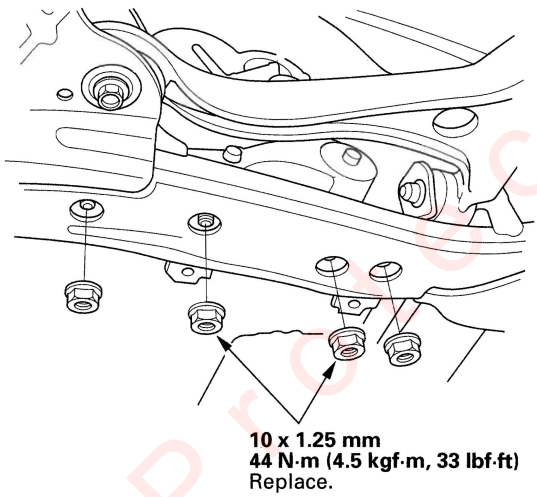

9. Remove the jack and front subframe adapter.

10. Lower the vehicle on the hoist.

11. Install the shift cable, and tighten the two bolts securing the shift cable bracket (M/T).

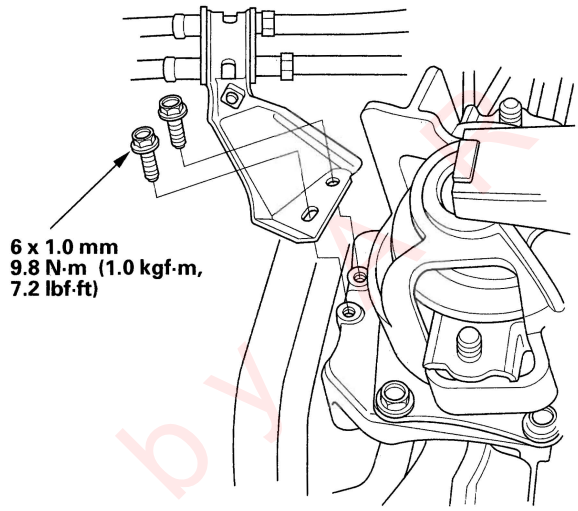

12. Install the vacuum hose (A).

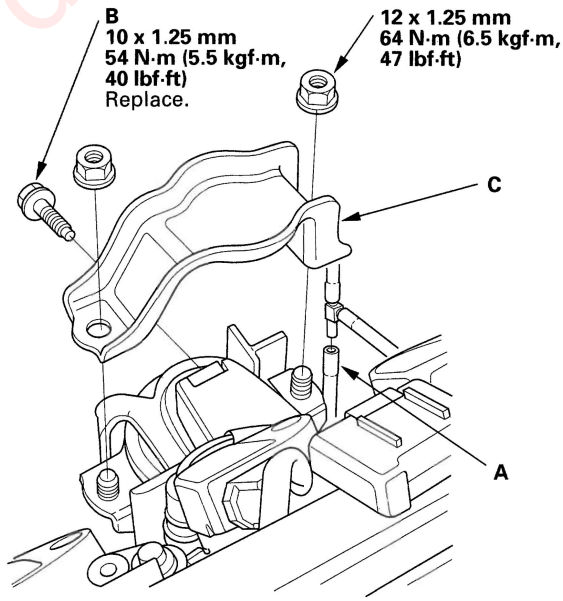

13. Tighten the rear mount bolt (B), then install the rear mount stop (C).

Protected by

14. Tighten the two bolts securing the rear engine damper (M/T).

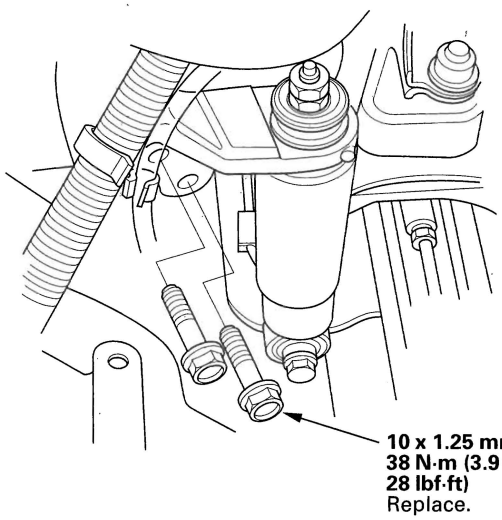

15. Tighten the front mount bolt (A), then install the front mount stop (B).

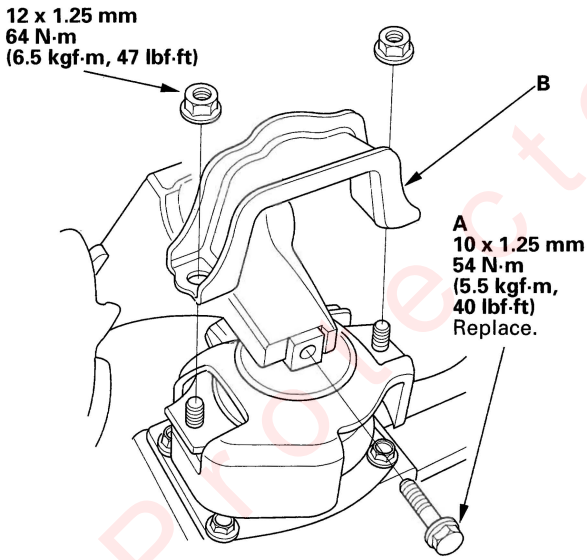

16. Tighten the two bolts securing the side engine mount bracket.

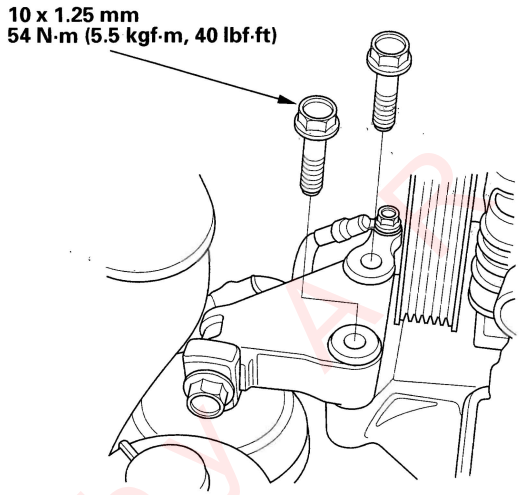

(cont'd)

Projected by AP

Engine Installation (cont'd)

17. Install the transmission upper mount bracket (A), then tighten the bolts in the numbered sequence shown.

M/T:

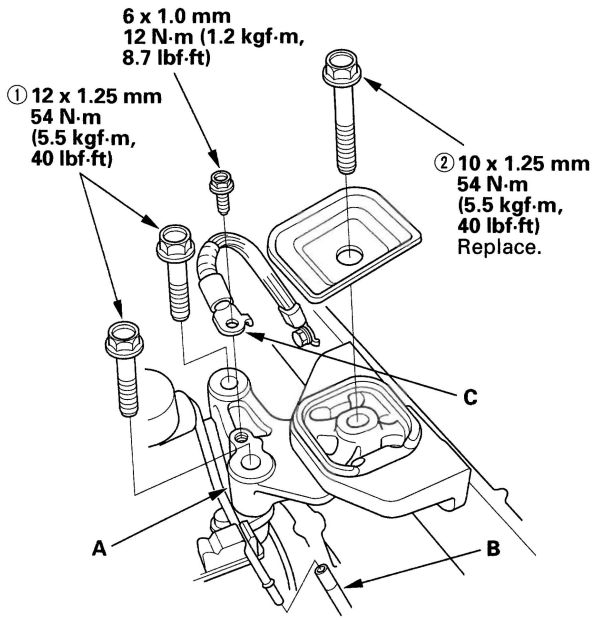

A/T:

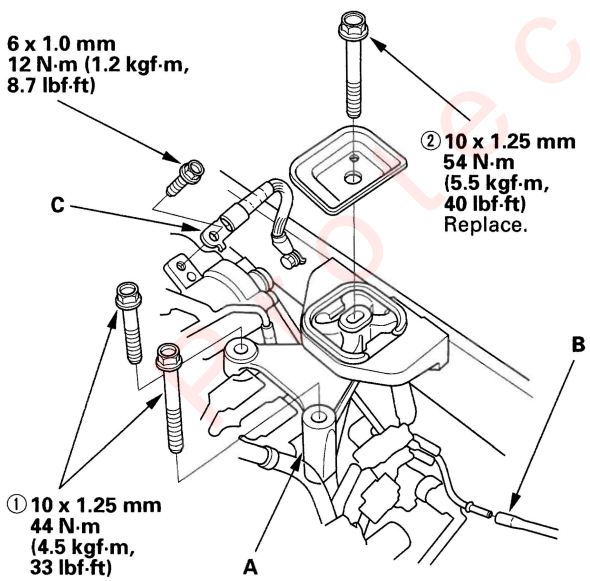

18. Install the vacuum hose (B).

19. Install the ground cable (C).

20. Raise the vehicle on the hoist to full height.

21. Connect the power steering pressure switch connector.

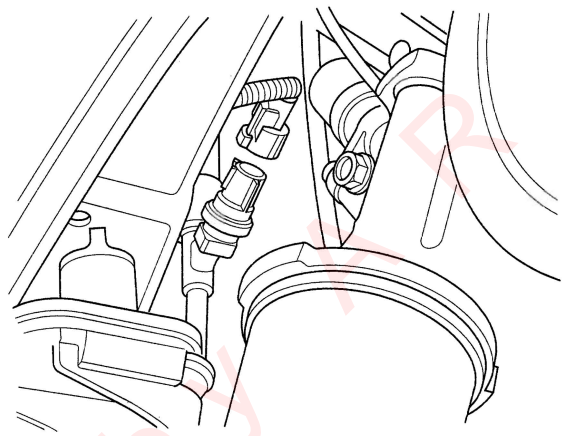

22. Install the power steering (P/S) hose.

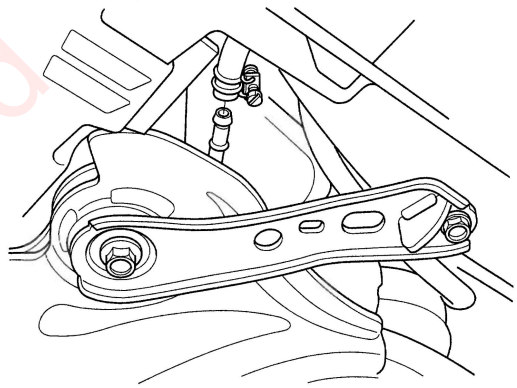

Protected by R

23. Install exhaust pipe A (A) using new gaskets (B) and new self locking nuts (C).

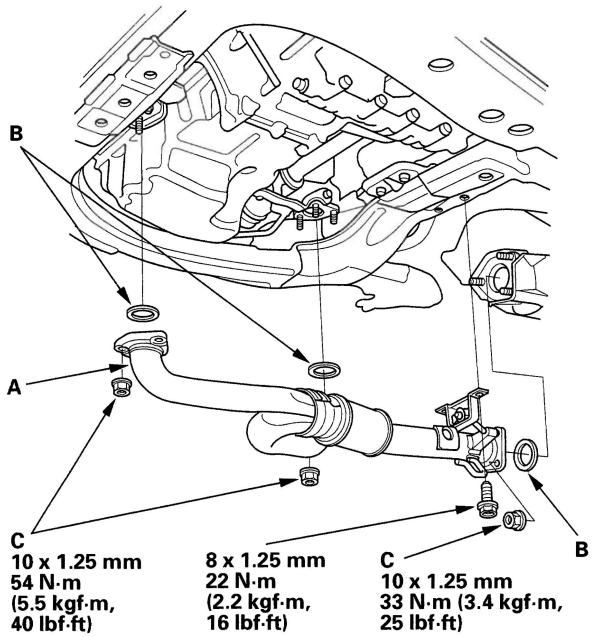

24. Install the shift cable (A/T) (see step 26 on page 14-221).

25. Install a new set ring on the end of each driveshaft, then install the driveshafts. Make sure each ring "clicks" into place in the differential and intermediate shaft.

26. Connect the suspension lower arm ball joints (see step 9 on page 18-21).

27. Connect the tie-rod end ball joints (see step 27 on page 17-56).

28. Install the damper fork (see step 2 on page 18-28).

29. Connect the stabilizer links (see page 18-22).

30. Install the splash shield.

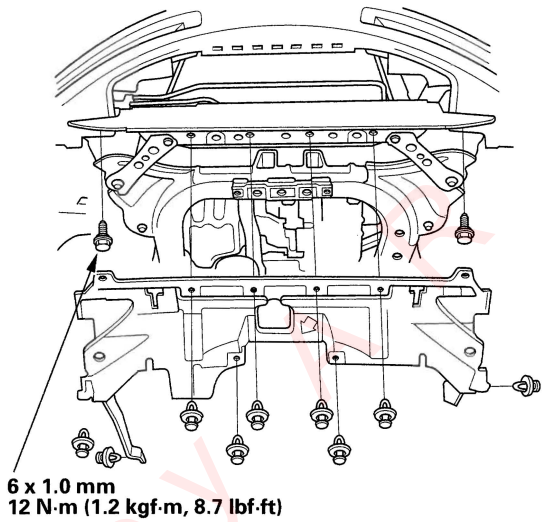

31. Install the engine under cover.

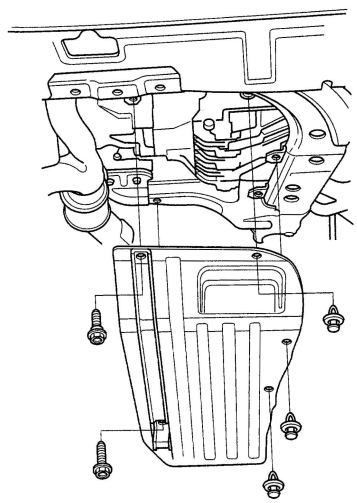

32. Install the front tires/wheels.

NOTE: On M/T models be careful not to damage or chip the paint of the brake calipers when installing the wheels.

33. Lower the vehicle on the hoist.

(cont'd)

Protected by ...

Engine Installation (cont'd)

34. Install the heater hoses.

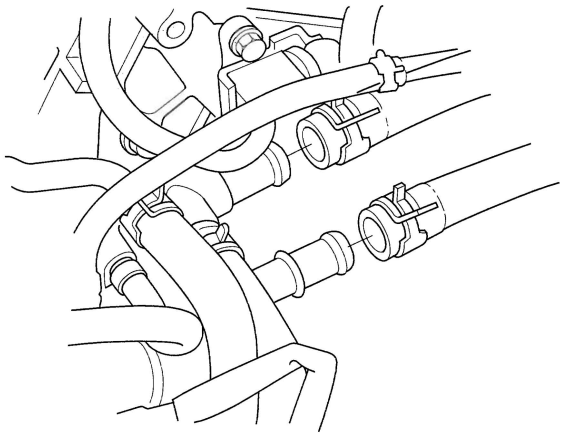

35. Install the upper radiator hose (A) and lower radiator hose (B).

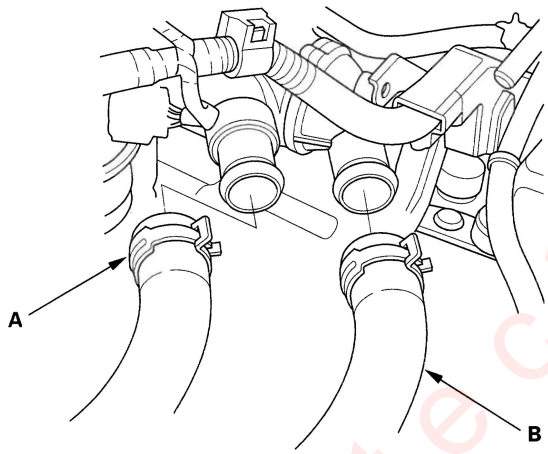

36. Install the A/C compressor.

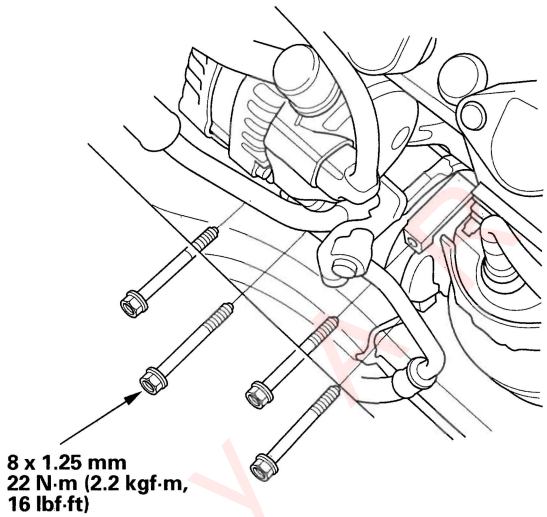

37. Install the condenser fan shroud (A) and coolant reserve tank (B), then connect the fan motor connector (C) and compressor clutch connector (D).

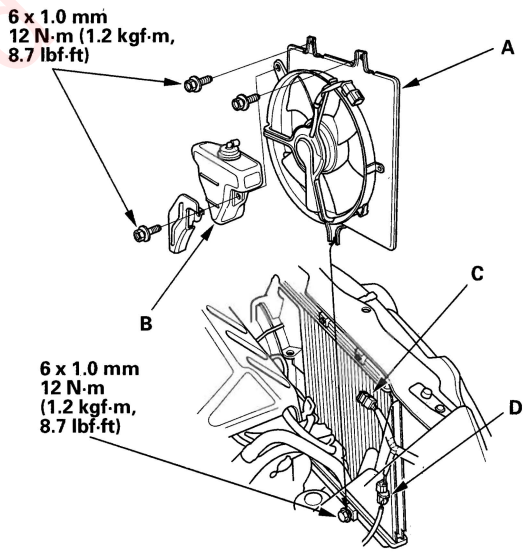

Protected by

38. Align the reference mark (A) on the steering joint and steering gearbox pinion shaft. Connect the steering joint (B) to the steering gearbox pinion shaft (C). Tighten the steering joint bolt.

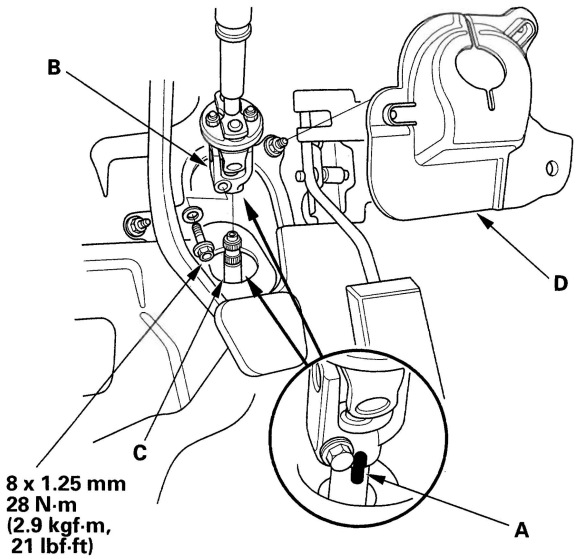

39. Install the steering joint cover (D).

40. Install the P/S pump inlet hose (A) and P/S pump outlet hose (B) with a new O-ring (C).

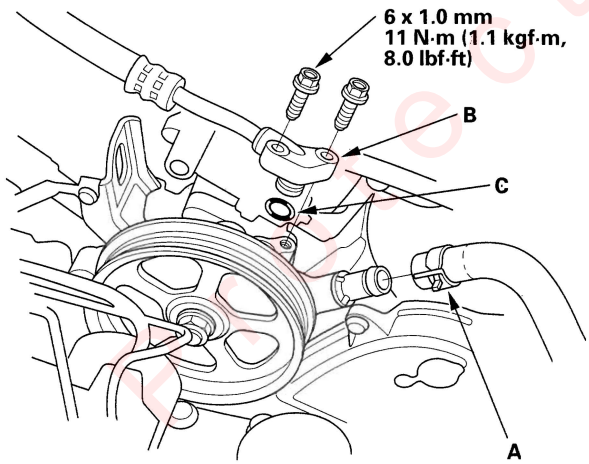

41. Install the P/S hose to the clamp.

42. Install the drive belt (see page 4-29).

43. Install the clutch slave cylinder and clutch line bracket mounting bolt (M/T) (see step 35 on page 13-27).

44. Install the shift cable and select cable, then tighten the three bolts securing the shift cable holder (M/T) (see step 36 on page 13-28).

45. Connect the engine wire harness connectors (A), then install the harness clamp (B).

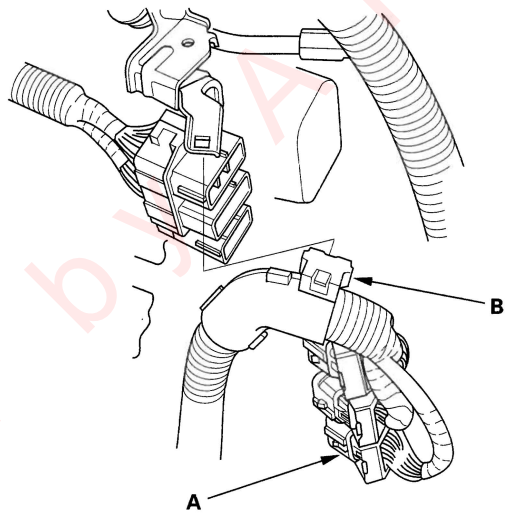

(cont'd)

Engine Installation (cont'd)

46. Install the brake booster vacuum hose (A), and evaporative emission (EVAP) canister hose (B).

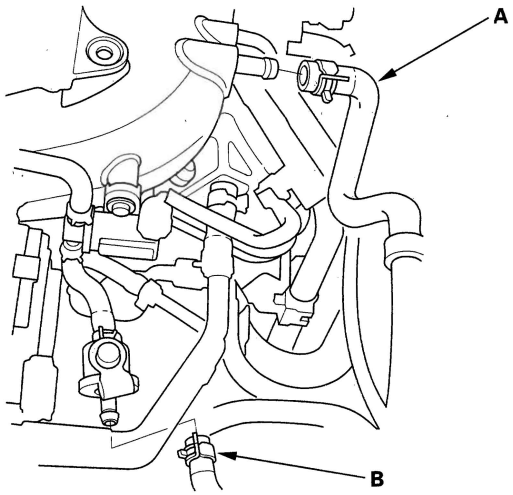

47. Connect the fuel feed hose (see page 11-253), then install the quick-connect fitting cover (A).

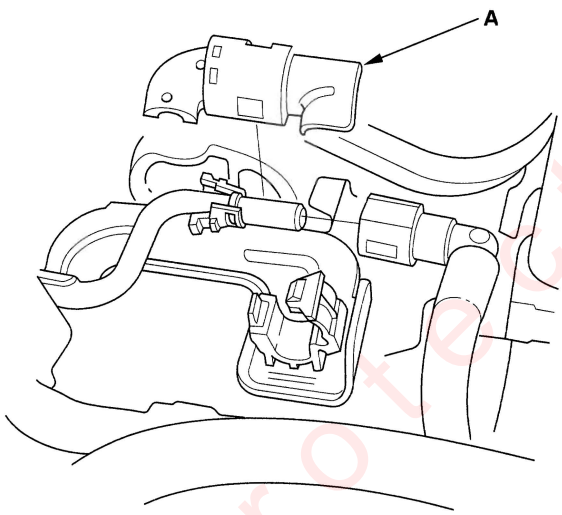

48. Install the strut brace (A), then install the harness clamp (B), and install the two 6 mm bolts (C).

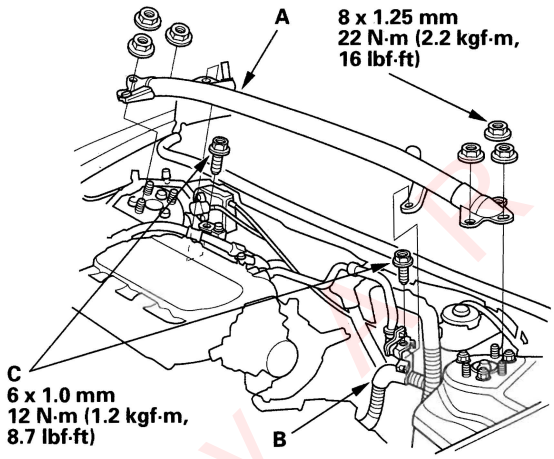

49. Install the under-hood fuse/relay box (A), and connect the harness connector (B).

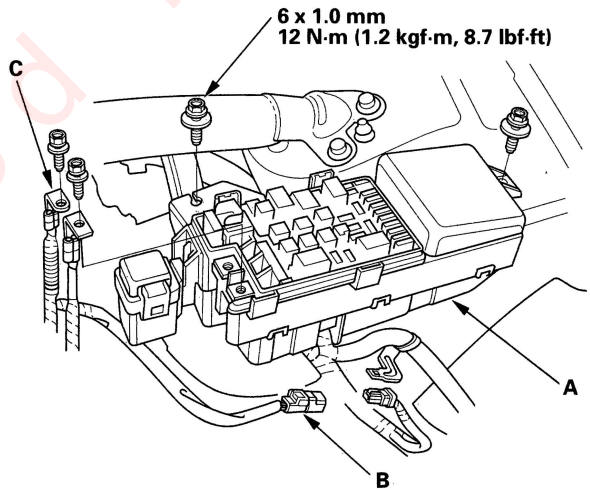

50. Install the battery cable (C).

Protected by

51. Install the battery base (A), then install the harness clamp (B).

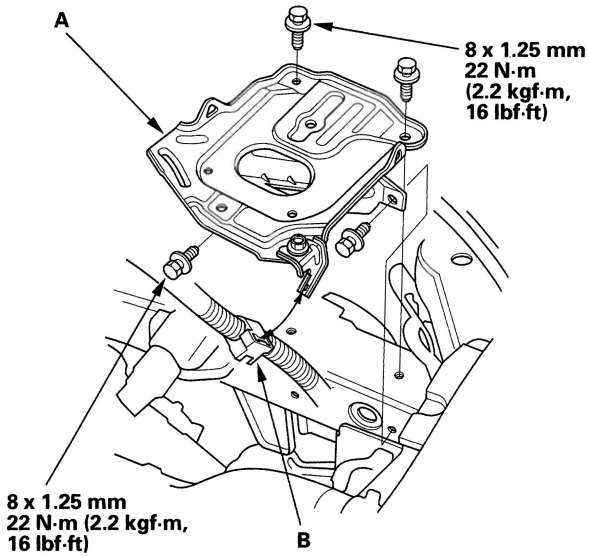

52. Install the air cleaner housing (see page 11-273).

53. Install the resonator (see page 11-274).

54. Install the intake manifold cover.

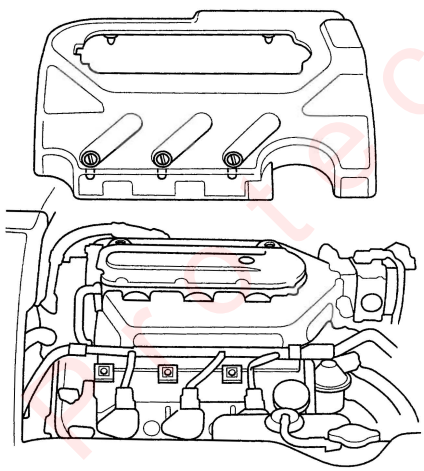

55. Install the battery. Clean the battery posts and cable terminals with sandpaper, then assemble them and apply grease to prevent corrosion.

56. Move the shift lever to each gear, and verify that the A/T gear position indicator follows the transmission range switch (A/T).

57. Check that the transmission shifts into gear smoothly (M/T).

58. Inspect for fuel leaks. Turn the ignition switch ON (II) (do not operate the starter) so the fuel pump runs for about 2 seconds and pressurizes the fuel line. Repeat this operation two or three times, then check for fuel leakage at any point in the fuel line.

59. Refill the engine with engine oil (see page 8-6).

60. Refill the transmission with fluid:

    - Manual transmission (see page 13-10).
    - Automatic transmission (see page 14-204).

61. Refill the radiator with engine coolant, and bleed the air from the cooling system with the heater valve open (see step 8 on page 10-7).

62. Refill the power steering system fluid (see page 17-12).

63. Perform the engine control module (ECM)/ powertrain control module (PCM) reset procedure (see page 11-4).

64. Perform the crankshaft position (CKP) pattern clear/ CKP pattern learn procedure (see page 11-4).

65. Inspect the idle speed (see page 11-238).

66. Inspect the ignition timing (see page 4-18).

(cont'd)

Protected by FSR

Engine Installation (cont'd)

67. Install the right rear engine compartment cover (A), then install the right side engine compartment cover (B).

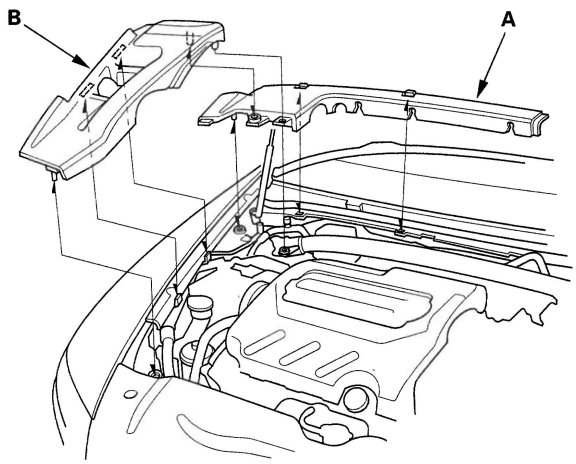

68. Install the left rear engine compartment cover (A) and the left side engine compartment cover (B).

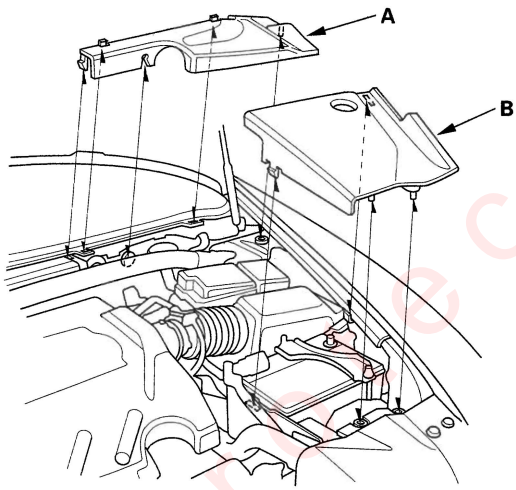

69. Enter the anti-theft codes for the radio and the navigation system, then enter the customer's XM radio channel presets.

70. Set the clock.

Protected by AR

Engine Mount Replacement

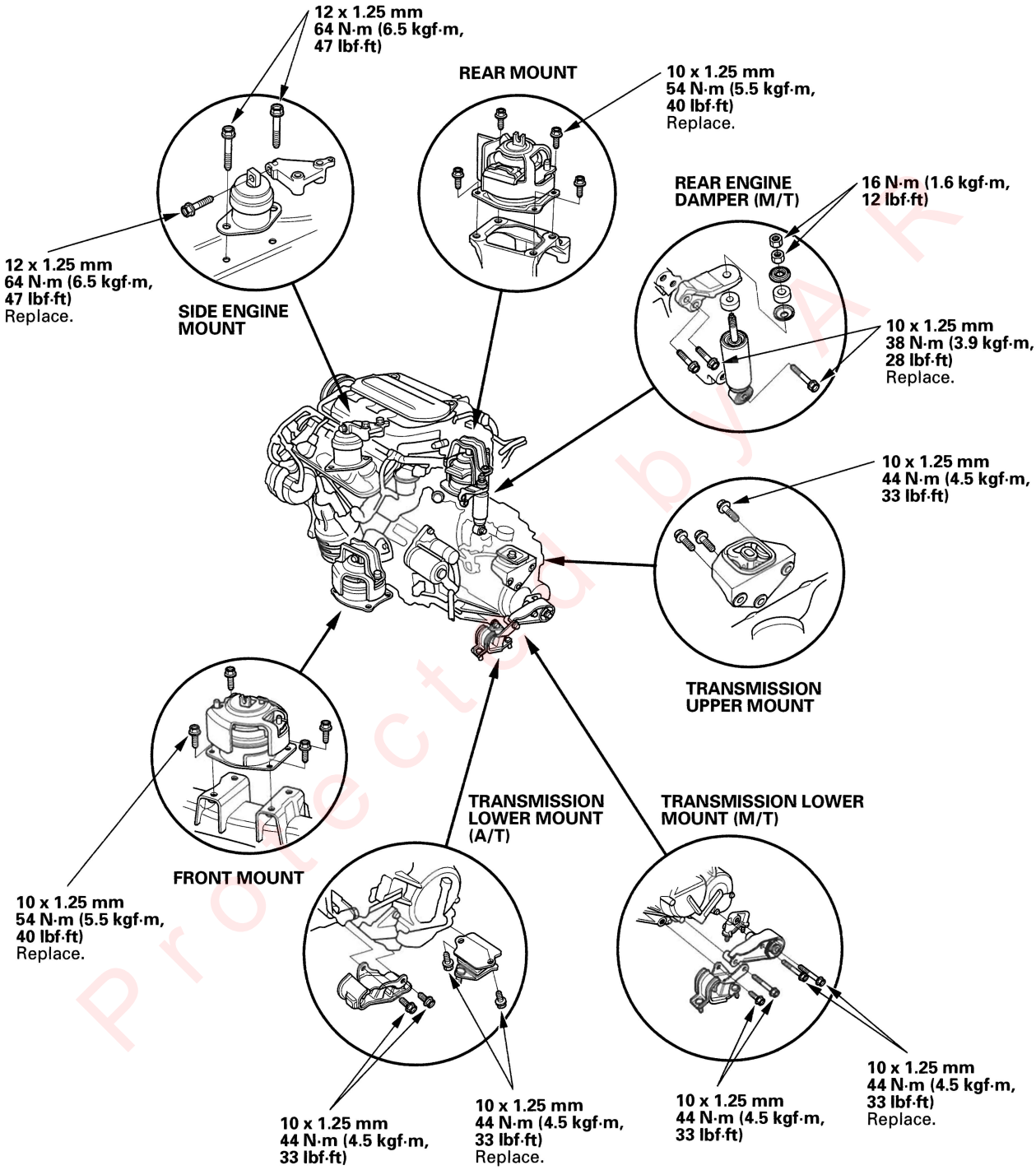

Protected by AK

Engine Mechanical

Cylinder Head

Special Tools 6-2
Component Location Index 6-3
Engine Compression Inspection 6-6
VTEC Rocker Arm Test 6-7
Valve Clearance Adjustment 6-8
Crankshaft Pulley Removal and Installation 6-12
Timing Belt Inspection 6-13
Timing Belt Removal 6-14
Timing Belt Installation 6-16
Timing Belt Drive Pulley Replacement 6-26
Timing Belt Adjuster Replacement 6-26
Cylinder Head Cover Removal 6-27
Cylinder Head Cover Installation 6-28
Cylinder Head Removal 6-29
Camshaft Replacement 6-33
Cylinder Head Inspection for Warpage 6-35
Rocker Arm Assembly Removal 6-35
Rocker Arm and Shaft Disassembly/Reassembly 6-36
Rocker Arm and Shaft Inspection 6-37
Camshaft Inspection 6-39
Valve, Spring, and Valve Seal Removal 6-42
Valve Inspection 6-43
Valve Stem-to-Guide Clearance Inspection 6-43
Valve Guide Replacement 6-44
Valve Seat Reconditioning 6-46
Valve, Spring, and Valve Seal Installation 6-48
Camshaft, Rocker Arm, Camshaft Seal, and Pulley Installation 6-49
Cylinder Head Installation 6-50
Sealing Bolt Installation 6-55



Protected by AR

Special Tools

Ref. No.	Tool Number	Description	Qty
①	07AAJ-PNAA100	Air Pressure Regulator	1
②	07HAH-PJ7A100	Valve Guide Reamer, 5.5 mm	1
③	07JAA-001020A	Socket, 19 mm	1
④	07JAB-001020B	Holder Handle	1
⑤	07MAB-PY3010A	Holder Attachment, 50 mm, offset	1
⑥	07PAD-0010000	Stem Seal Driver	1
⑦	07VAJ-P8A010A	VTEC Air Adapter	1
⑧	070AJ-0030100	VTEC Air Stopper	1
⑨	07742-0010100	Valve Guide Driver, 5.5 mm	1
⑩	07757-PJ1010A	Valve Spring Compressor Attachment	1


①

②

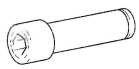
③

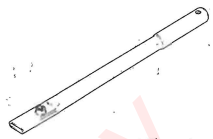
④

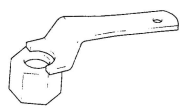
⑤

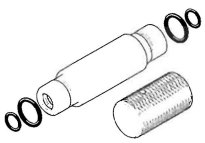
⑥


⑦


⑧

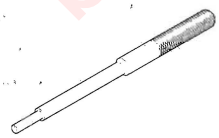
⑨

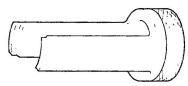
⑩

Protected by AR

Component Location Index

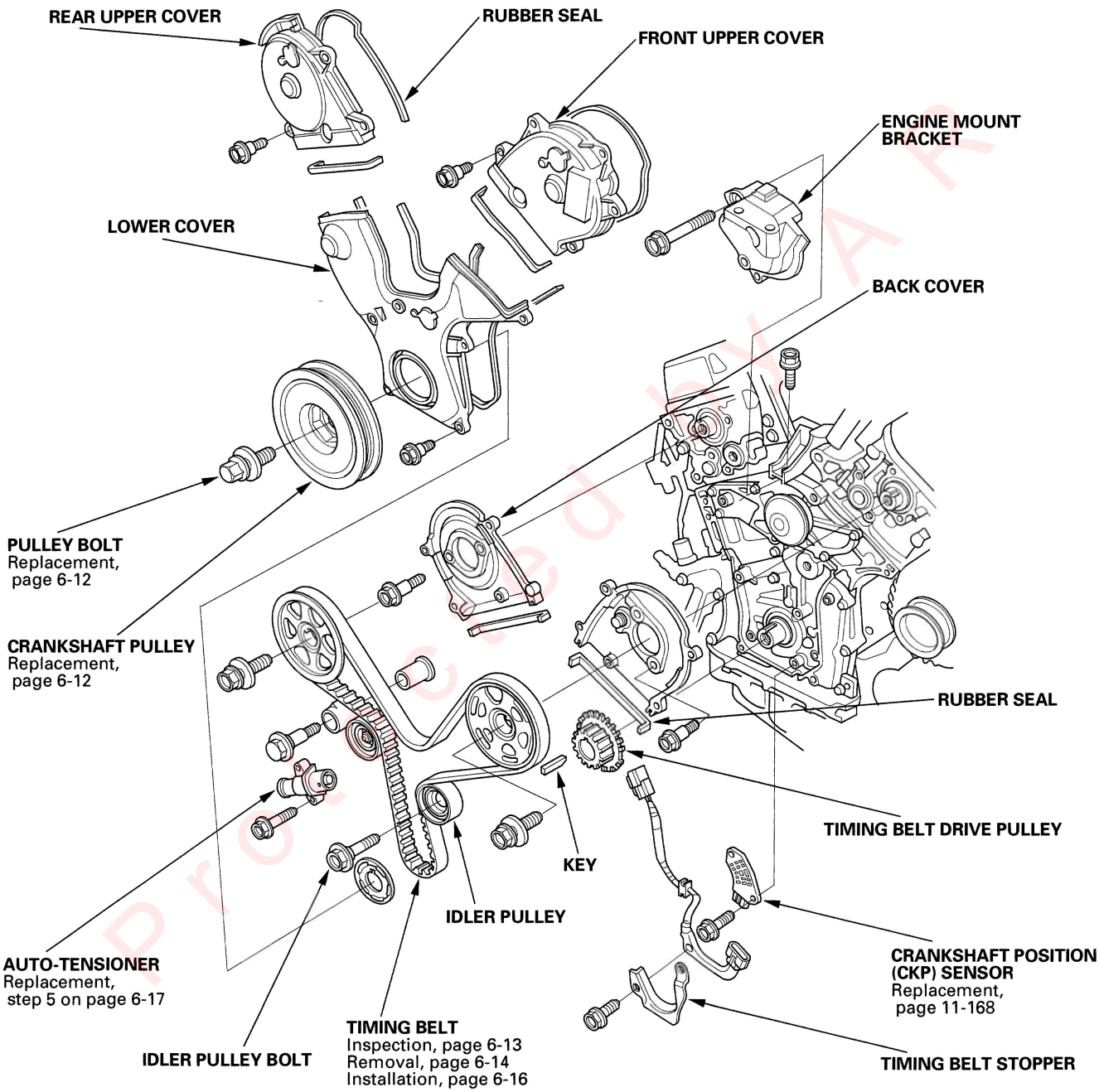

(cont'd)

Component Location Index (cont'd)

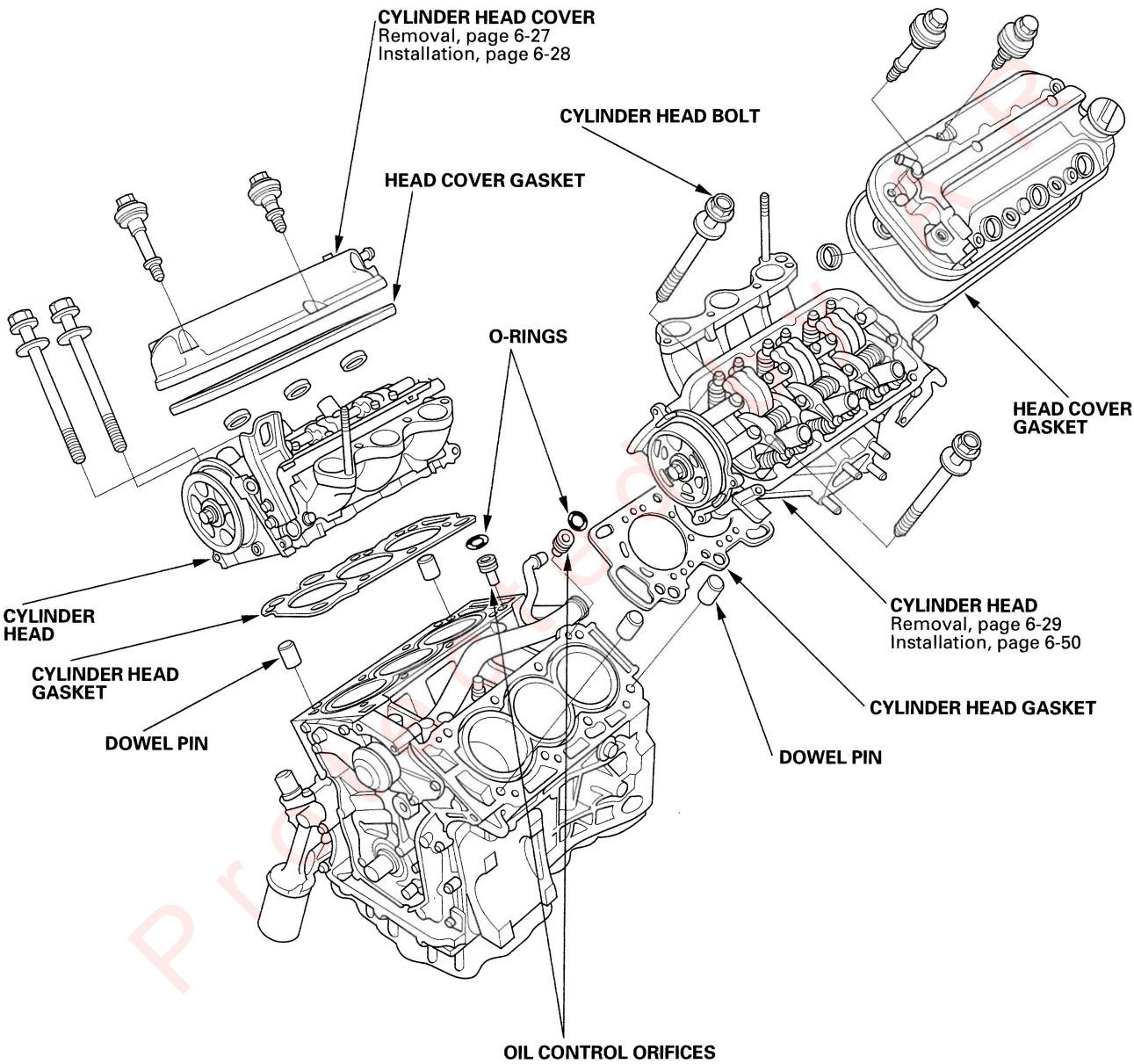

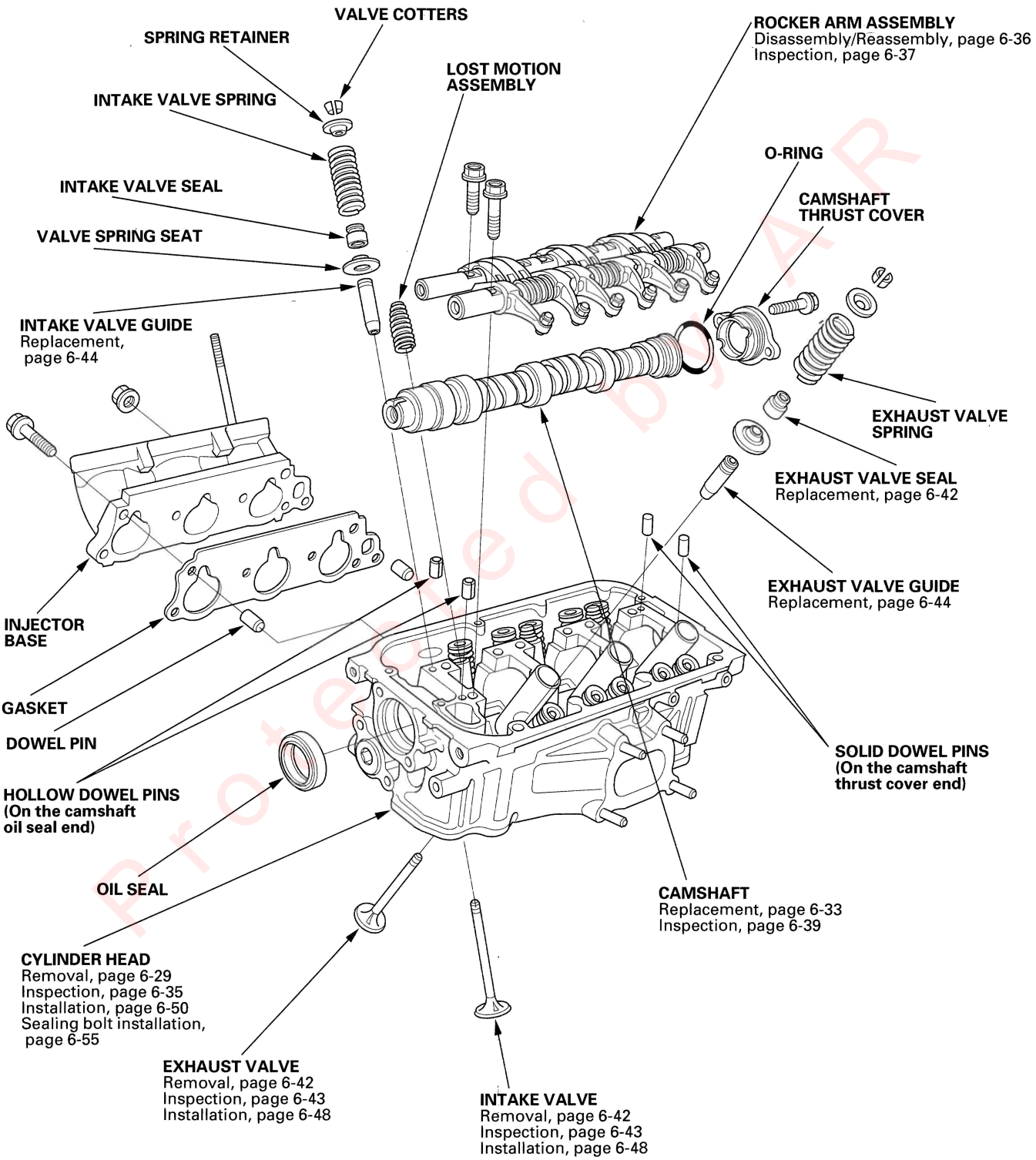

Protected by AR

Engine Compression Inspection

NOTE: After this inspection, you must select engine control module (ECM)/powertrain control module (PCM) reset using the Honda Diagnostic System (HDS) (see page 11-4), otherwise ECM/PCM will continue to stop the fuel injectors from operating.

1. Warm up the engine to normal operating temperature (cooling fan comes on).
2. Turn the ignition switch OFF.
3. Connect the HDS to the data link connector (DLC) (see page 11-3).
4. Select PGM-FI, select inspection, then select the ALL INJECTORS OFF function on the HDS.
5. Remove the six ignition coils (see page 4-19).
6. Remove the six spark plugs.
7. Attach the compression gauge to the spark plug hole.

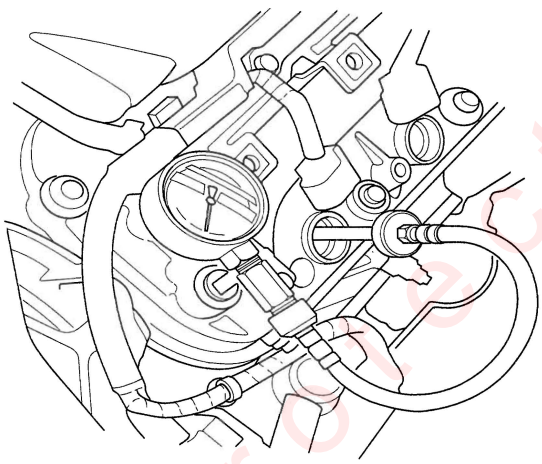

8. Open the throttle fully, then crank the engine with the starter motor and measure the compression.

   Compression Pressure:
   Above 930 kPa (9.5 kgf/cm², 135 psi)

9. Measure the compression on the remaining cylinders.

   Maximum variation:
   Within 200 kPa (2.0 kgf/cm², 28 psi)

10. If the compression is not within specifications, check the following items, then remeasure the compression.

    - Damaged or worn valves and seats
    - Damaged cylinder head gasket
    - Damaged or worn piston rings
    - Damaged or worn piston and cylinder bore

11. Select ECM/PCM reset (see page 11-4) to cancel the ALL INJECTORS OFF function on the HDS.

Protected by AR

VTEC Rocker Arm Test

Special Tools Required
- VTEC air adapter 07VAJ-P8A010A
- VTEC air stopper 070AJ-0030100
- Air pressure regulator 07AAJ-PNAA100

1. Start the engine and let it run for 5 minutes, then turn OFF the ignition switch.

2. Remove the cylinder head covers (see page 6-27).

3. Set the No. 1 piston at top dead center (TDC) (see step 3 on page 6-8).

4. Push on the intake mid rocker arm (A) for the No. 1 cylinder. The mid rocker arm should move independently of the primary rocker arm (B) and secondary rocker arm (C).

   - If the intake mid rocker arm does not move, remove the mid, primary, and secondary intake rocker arms as an assembly, then check that the pistons in the mid and primary rocker arms move smoothly. If any rocker arm needs replacing, replace the primary, mid, and secondary rocker arms as an assembly, and retest.
   - If the mid rocker arm moves freely, repeat the above procedure for the remaining intake mid rocker arms with each piston at TDC. When all the mid rocker arms pass the test, go to step 5.

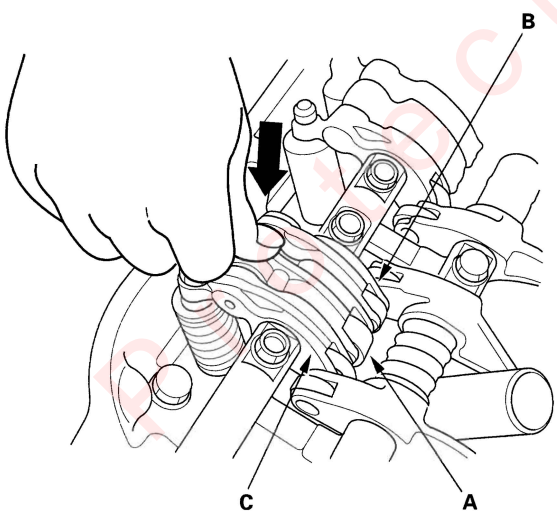

5. Check that the air pressure on the shop air compressor gauge indicates over 690 kPa (7.0 kgf/cm², 100 psi).

6. Inspect the valve clearance (see step 4 on page 6-9).

7. Remove the No. 1 and No. 6 intake rocker shaft mounting bolts, then install and connect the special tools as shown.

FRONT:

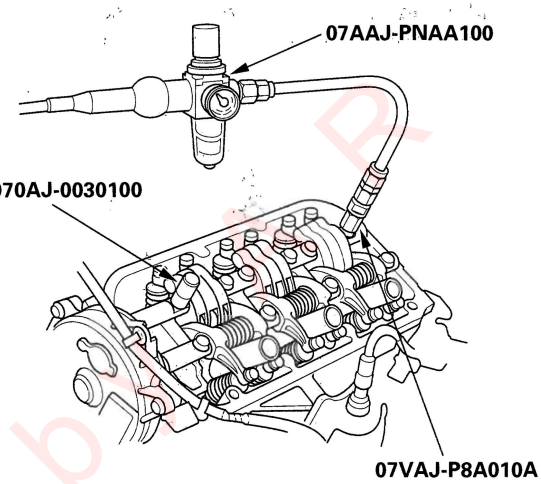

REAR:

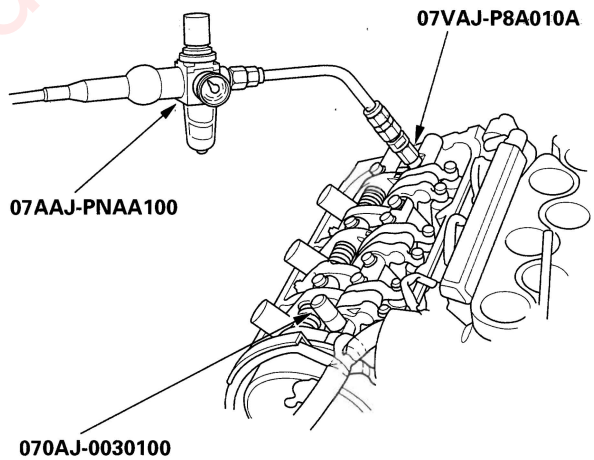

8. Loosen the valve on the regulator, and apply the specified air pressure.

   Specified Air Pressure:
   440 – 540 kPa (4.5 – 5.5 kgf/cm², 64 – 78 psi)

   NOTE: If the synchronizing pistons do not move after applying air pressure, move the primary or secondary rocker arm up and down manually.

(cont'd)

VTEC Rocker Arm Test (cont'd)

9. Make sure that the intake primary rocker arm (A) and intake secondary rocker arm (B) are mechanically connected by the piston and that the mid rocker arm (C) does not move when pushed manually. If any intake mid rocker arm moves independently of the primary and secondary rocker arms, replace the rocker arms as a set.

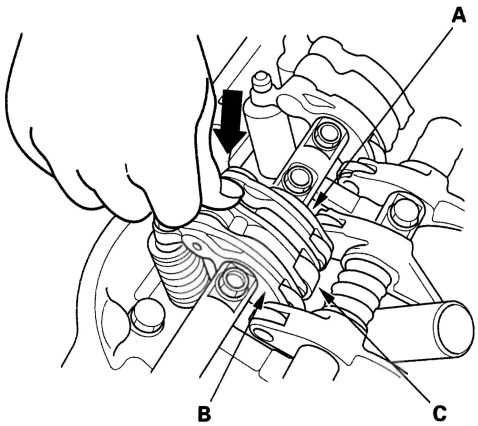

10. Remove the special tools.
11. Tighten the rocker shaft bolts to 24 N·m (2.4 kgf·m, 17 lbf·ft)
12. Install the cylinder head covers (see page 6-28).

Valve Clearance Adjustment

NOTE: Adjust the valves only when the cylinder head temperature is less than 100°F (38°C).

1. Remove the right side engine compartment cover (see step 1 on page 6-13).
2. Remove the cylinder head covers (see page 6-27).
3. Set the No. 1 piston at top dead center (TDC). Align the pointer (A) on the front upper cover with the No. 1 piston TDC mark (B) on the front camshaft pulley.

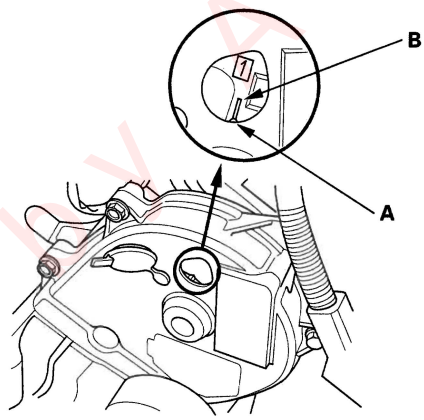

Protected by AP

4. Select the correct thickness feeler gauge for the valves you're going to check.

Intake: 0.20–0.24 mm (0.008–0.009 in.)
Exhaust: 0.28–0.32 mm (0.011–0.013 in.)

Adjusting screw locations:

REAR:

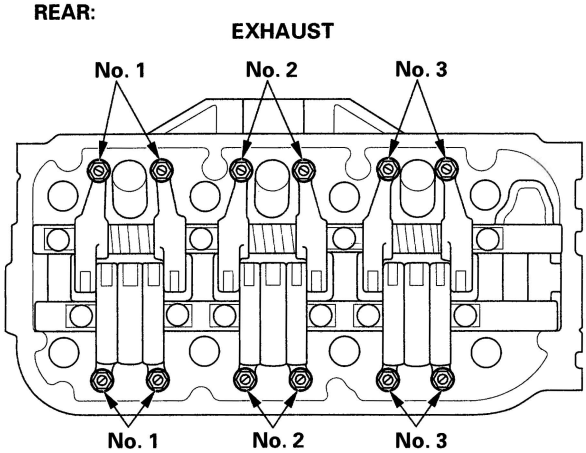

FRONT:

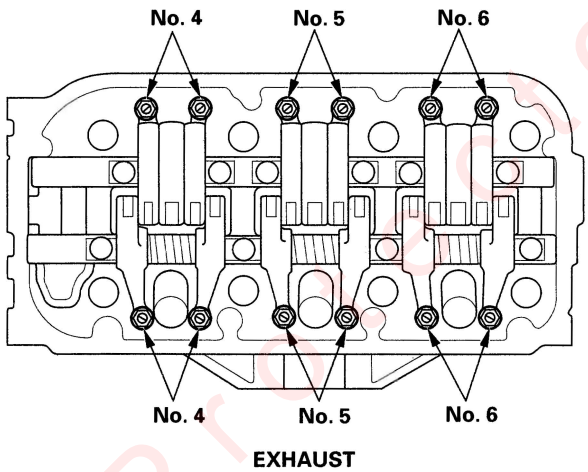

5. Insert the feeler gauge (A) between the adjusting screw and the end of the valve stem on No. 1 cylinder and slide it back and forth; you should feel a slight amount of drag.

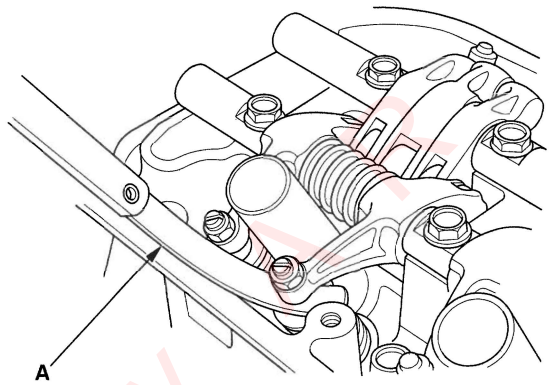

6. If you feel too much or too little drag, loosen the locknut (A), and turn the adjusting screw (B) until the drag on the feeler gauge is correct.

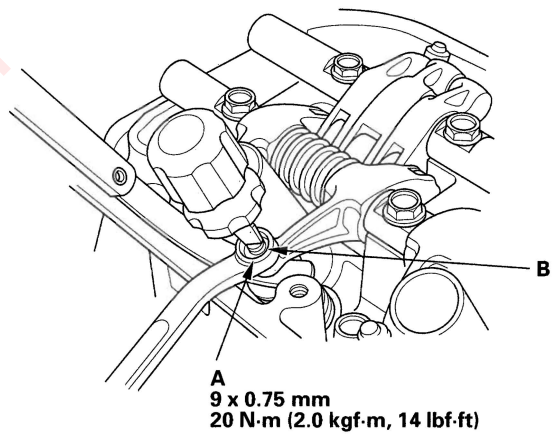

7. Tighten the locknut and recheck the clearance. Repeat the adjustment, if necessary.

(cont'd)

Processed by

Valve Clearance Adjustment (cont'd)

8. Rotate the crankshaft clockwise. Align the pointer (A) on the front upper cover with the No. 4 piston TDC mark (B) on the front camshaft pulley.

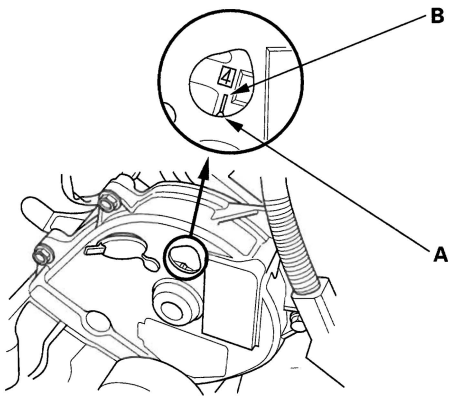

9. Check and, if necessary, adjust the valve clearance on No. 4 cylinder.

10. Rotate the crankshaft clockwise. Align the pointer (A) on the front upper cover with the No. 2 piston TDC mark (B) on the front camshaft pulley.

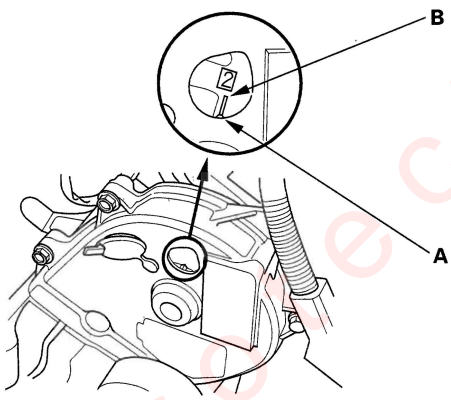

11. Check and, if necessary, adjust the valve clearance on No. 2 cylinder.

12. Rotate the crankshaft clockwise. Align the pointer (A) on the front upper cover with the No. 5 piston TDC mark (B) on the front camshaft pulley.

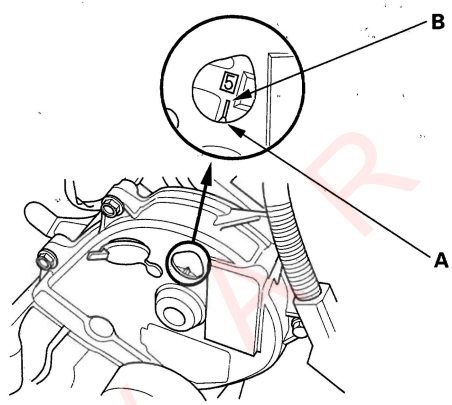

13. Check and, if necessary, adjust the valve clearance on No. 5 cylinder.

14. Rotate the crankshaft clockwise. Align the pointer (A) on the front upper cover with the No. 3 piston TDC mark (B) on the front camshaft pulley.

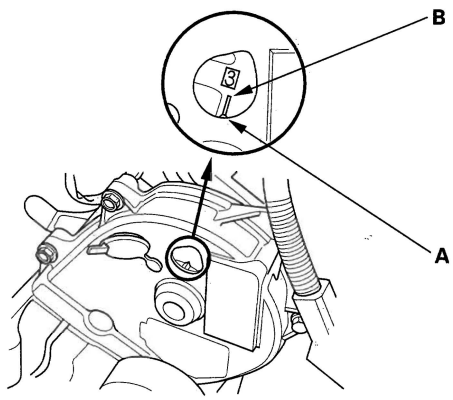

15. Check and, if necessary, adjust the valve clearance on No. 3 cylinder.

Protected by AR

16. Rotate the crankshaft clockwise. Align the pointer (A) on the front upper cover with the No. 6 piston TDC mark (B) on the front camshaft pulley.

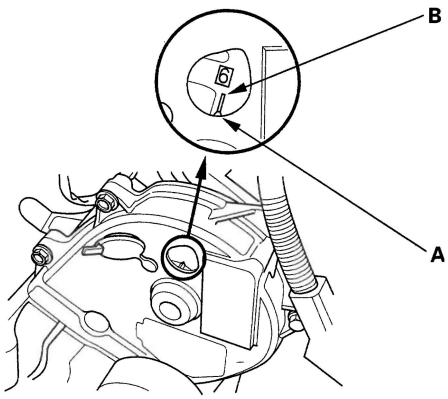

17. Check and, if necessary, adjust the valve clearance on No. 6 cylinder.

18. Install the cylinder head covers (see page 6-28).

19. Install the right side engine compartment cover.

Protected by AR

Crankshaft Pulley Removal and Installation

Special Tools Required
- Holder handle 07JAB-001020B
- Holder attachment, 50 mm, offset 07MAB-PY3010A
- Socket, 19 mm 07JAA-001020A, or a commercially available 19 mm socket

Removal

1. Remove the right front tire/wheel.
2. Remove the splash shield.

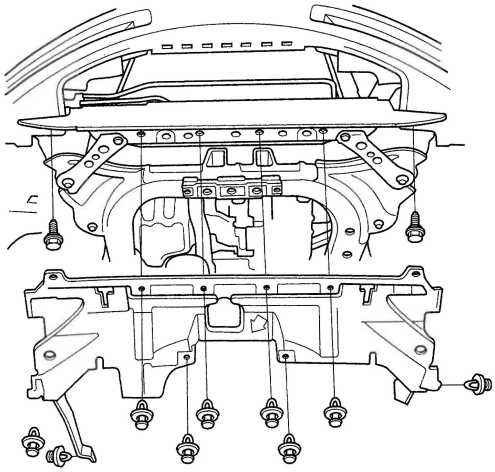

3. Remove the drive belt (see page 4-29).
4. Hold the pulley with the holder handle (A) and holder attachment (B).

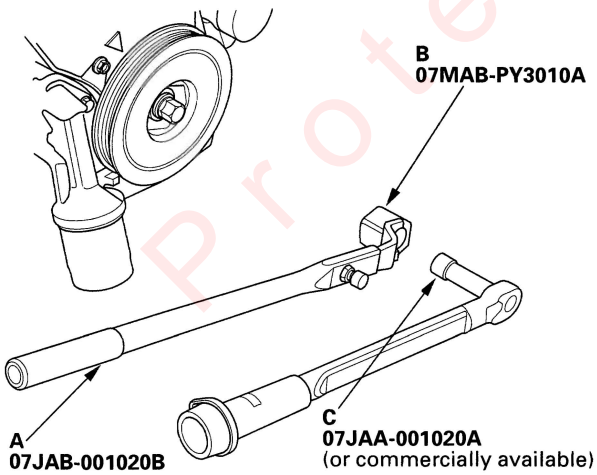

5. Remove the bolt with a heavy duty 19 mm socket (C) and breaker bar, then remove the crankshaft pulley.

Installation

1. Clean the pulleys (A), cranksahft (B), bolt (C), and washer (D). lubricate with new engine oil as shown.

●: Lubricate with new engine oil
○: Clean

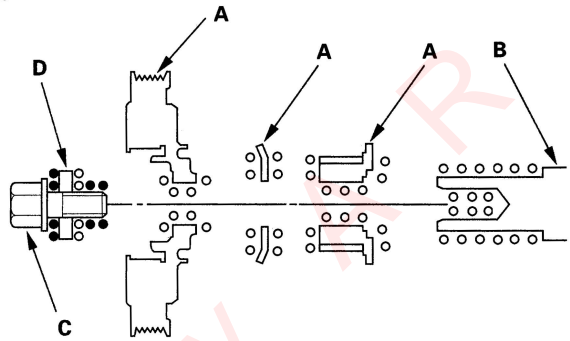

2. Install the crankshaft pulley, and tighten the bolt to 245 N·m (25.0 kgf·m, 181 lbf·ft). Do not use an impact wrench.
   1 Hold the pulley with the holder handle (A) and holder attachment (B).
   2 Tighten the bolt with a torque wrench and 19 mm socket (C).

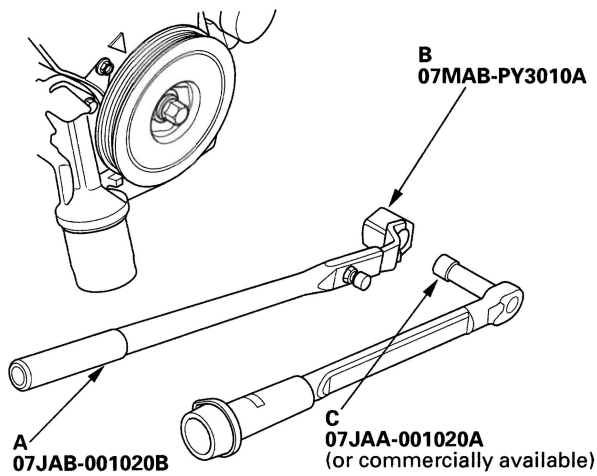

3. Install the drive belt (see page 4-29).
4. Install the splash shield.
5. Install the right front tire/wheel.

NOTE: On M/T models be careful not to damage or chip the paint of the brake calipers when installing the wheels.

Protected by ARR

Timing Belt Inspection

1. Remove the right side engine compartment cover.

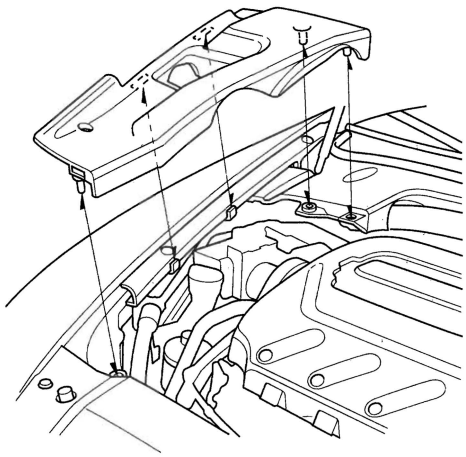

2. Remove the front upper cover.

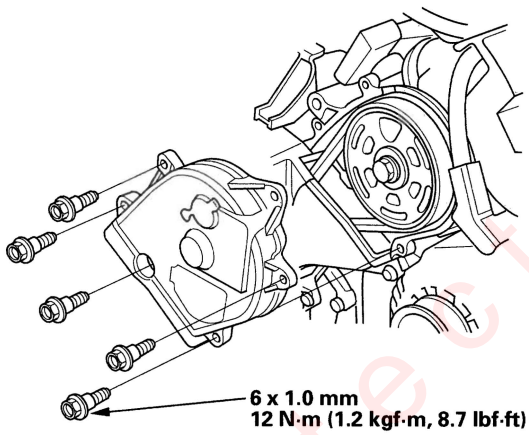

3. Inspect the timing belt for cracks and oil or coolant soaking. Replace the belt if it is cracked or soaked. Remove any oil or solvent that gets on the belt.

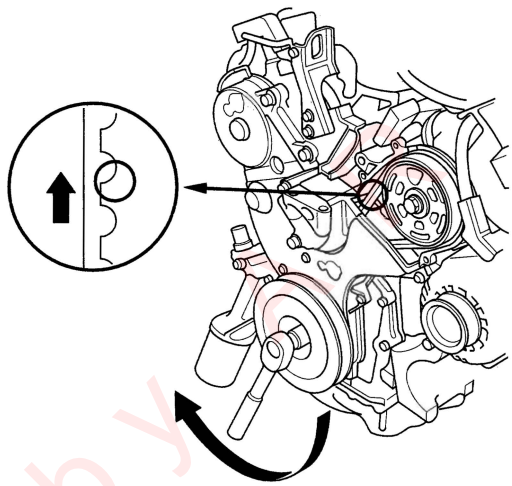

Protected by

Timing Belt Removal

1. Remove the right side engine compartment cover (see step 1 on page 6-13).

2. Turn the crankshaft so its white mark (A) lines up with the pointer (B).

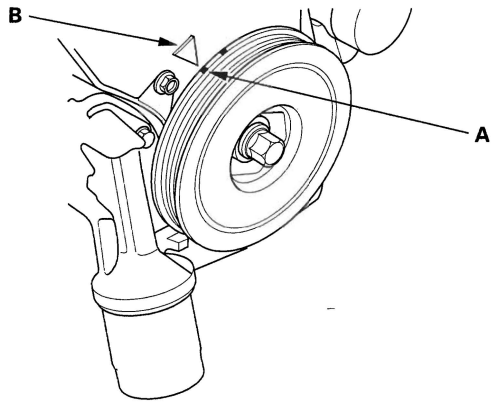

3. Check that the No. 1 piston top dead center (TDC) mark (A) on the front camshaft pulley and the pointer (B) on the front upper cover are aligned.

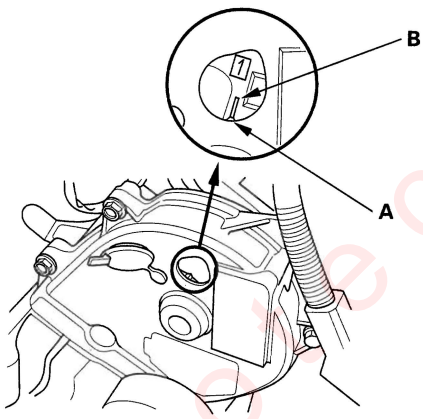

4. Remove the right front tire/wheel.

5. Remove the splash shield.

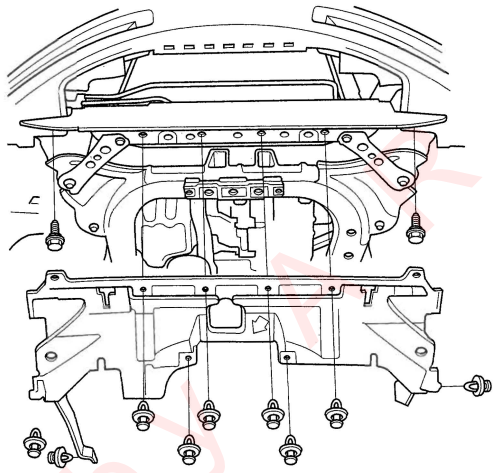

6. Remove the drive belt (see page 4-29).

7. Support the engine with a jack and wood block under the oil pan.

8. Remove the ground cable (A), then remove the side engine mount bracket (B).

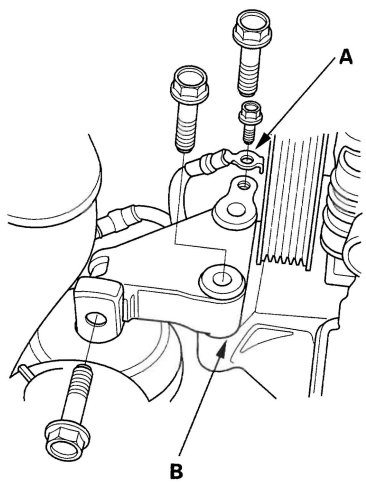

Protected by

9. Remove the front upper cover (A) and rear upper cover (B).

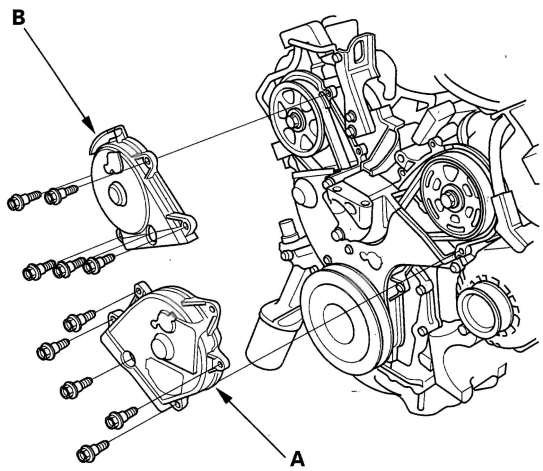

10. Remove the crankshaft pulley (see step 4 on page 6-12).

11. Remove the lower cover.

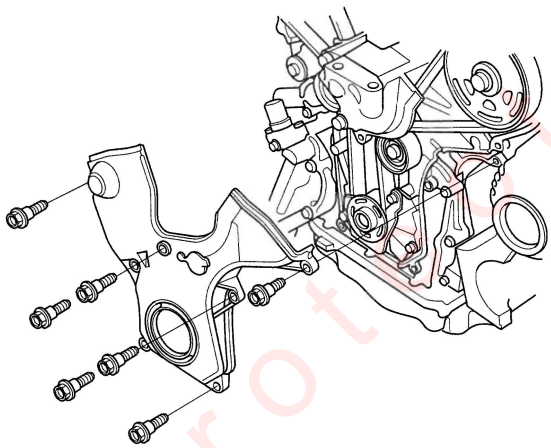

12. Remove one of the battery clamp bolts from the battery tray, and grind the end of it as shown.

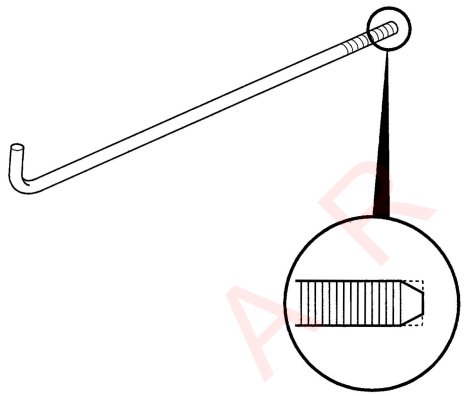

13. Screw the battery clamp bolt in as shown to hold the timing belt adjuster in its current position. Tighten it by hand; do not use a wrench.

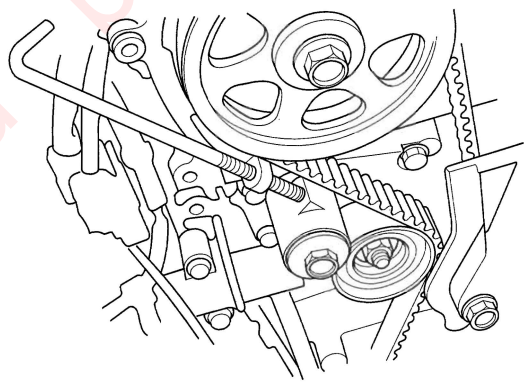

Protected by AR

(cont'd)

Timing Belt Removal (cont'd)

14. Remove the engine mount bracket.

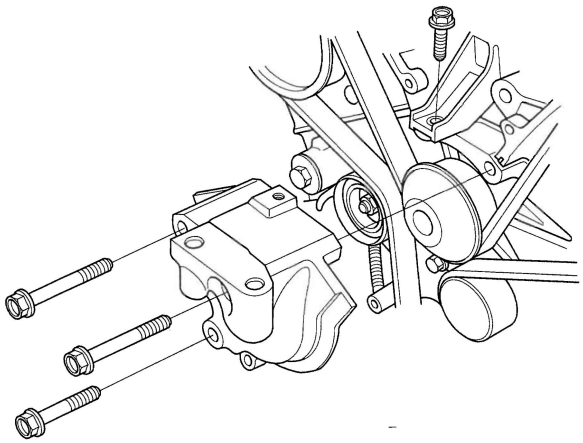

15. Remove the idler pulley bolt (A) and idler pulley (B), then remove the timing belt.

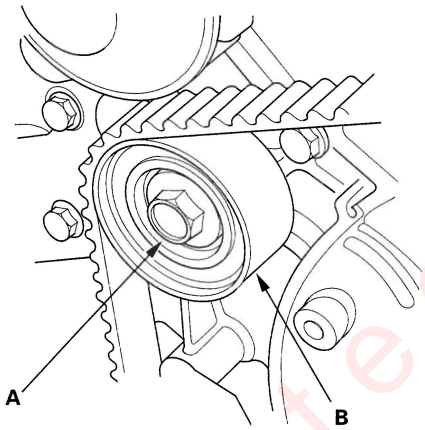

Timing Belt Installation

NOTE: The following procedure is for installing a new timing belt. If you are installing a used belt, refer to the used belt installation procedure (see page 6-22).

New Belt

1. Clean the timing belt pulleys, timing belt guide plate, and the upper and lower covers.

2. Set the timing belt drive pulley to top dead center (TDC) by aligning the TDC mark (A) on the tooth of the timing belt drive pulley with the pointer (B) on the oil pump.

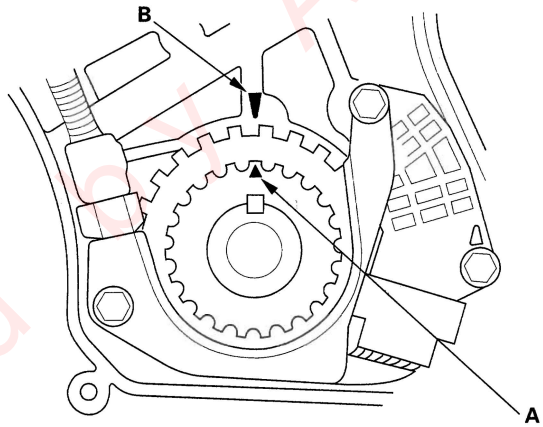

Protected by A.P.

3. Set the camshaft pulleys to TDC by aligning the TDC marks (A) on the camshaft pulleys with the pointers (B) on the back covers.

FRONT:

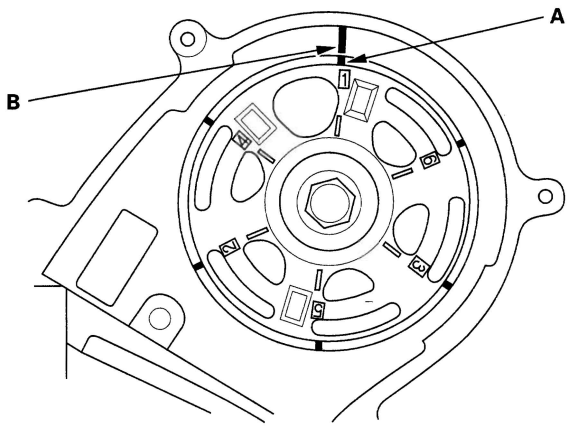

REAR:

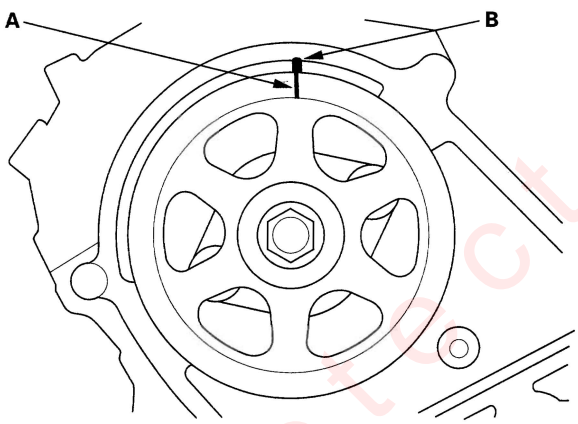

4. Remove the battery clamp bolt from the back cover.

5. Remove the auto-tensioner.

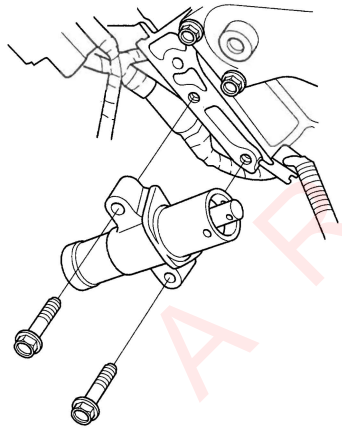

6. Align the holes on the rod and housing of the auto-tensioner.

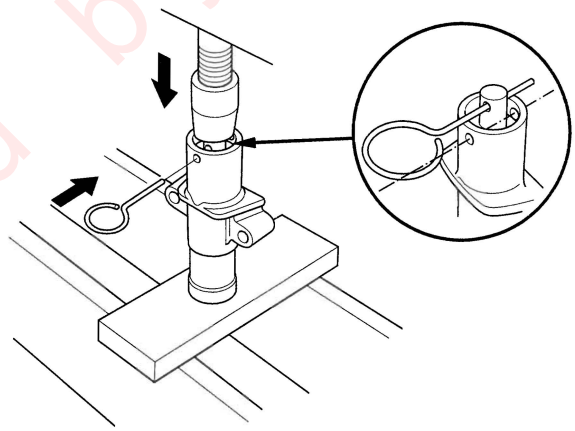

7. Use a hydraulic press to slowly compress the auto-tensioner. Insert a 2.0 mm (0.08 in.) pin through the housing and the rod.

   NOTE: The compression pressure should not exceed 9,800 N (1,000 kgf, 2,200 lbf).

(cont'd)

Protected by AR

Timing Belt Installation (cont'd)

8. Install the auto-tensioner.

   NOTE: Make sure the pin stays in place.

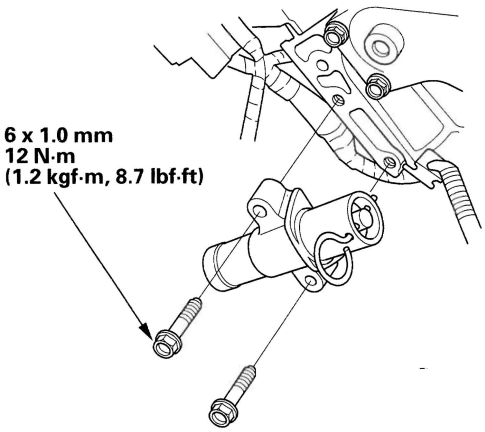

9. Screw the battery clamp bolt in as shown to hold the timing belt adjuster. Tighten it by hand, do not use a wrench.

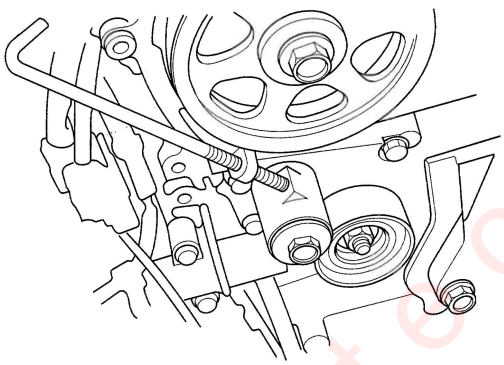

10. Apply liquid thread lock (P/N 08713-0001) to the idler pulley bolt, then loosely install the idler pulley.

11. Install the timing belt in a counterclockwise sequence starting with the drive pulley.

    1. Drive pulley (A).
    2. Idler pulley (B).
    3. Front camshaft pulley (C).
    4. Water pump pulley (D).
    5. Rear camshaft pulley (E).
    6. Adjusting pulley (F).

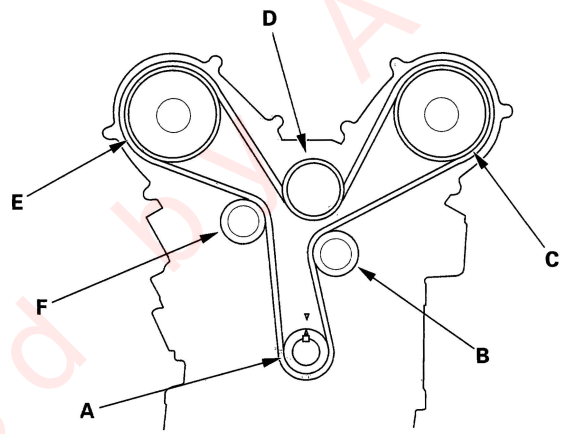

12. Tighten the idler pulley bolt.

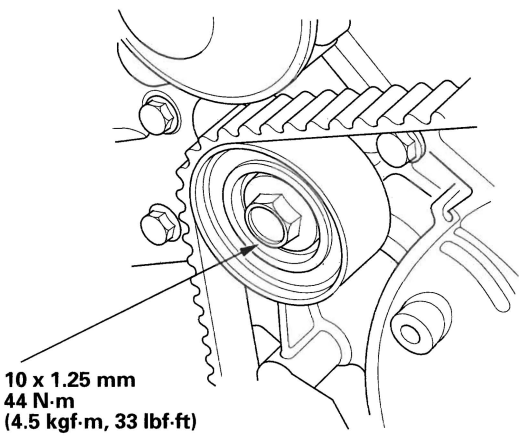

Protected by AR

13. Remove the pin from the auto-tensioner.

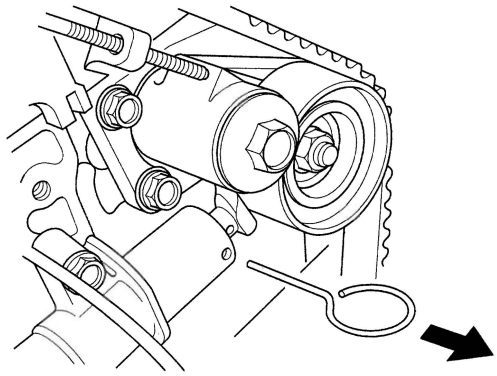

14. Remove the battery clamp bolt from the back cover.

15. Install the engine mount bracket.

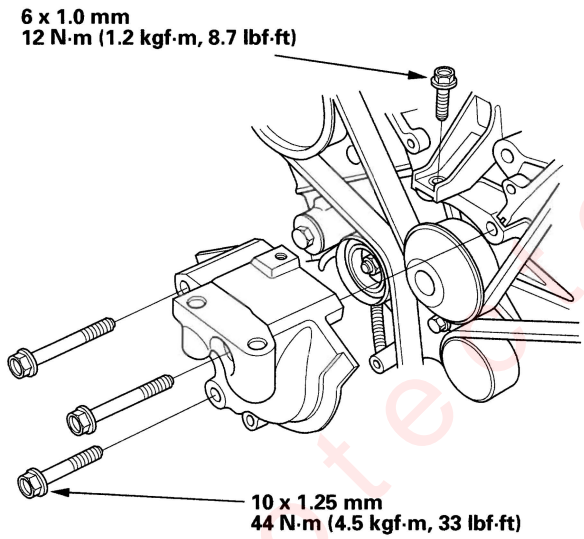

16. Install the timing belt guide plate as shown.

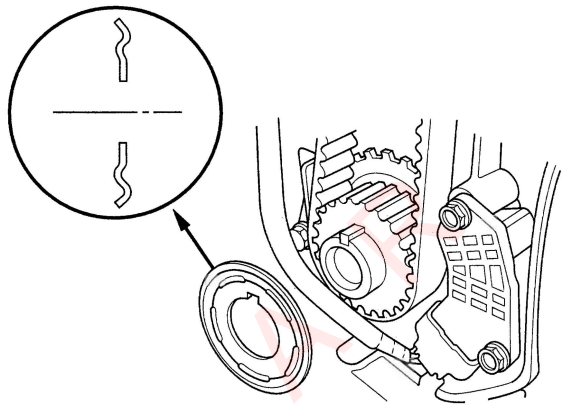

Protected by

(cont'd)

Timing Belt Installation (cont'd)

17. Install the lower cover.

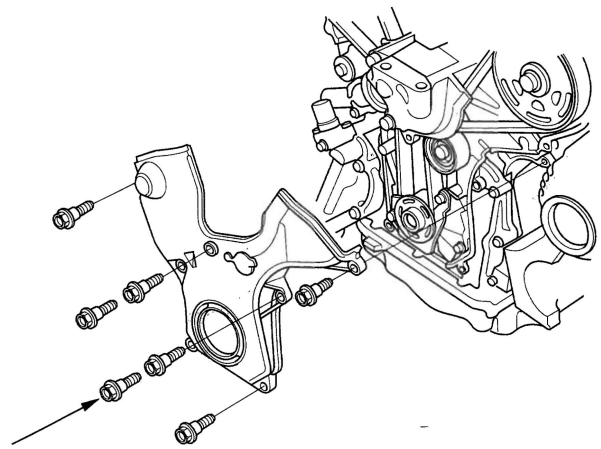

6 x 1.0 mm
12 N·m (1.2 kgf·m, 8.7 lbf·ft)

18. Install the crankshaft pulley (see page 6-12).

19. Install the front upper cover (A) and rear upper cover (B).

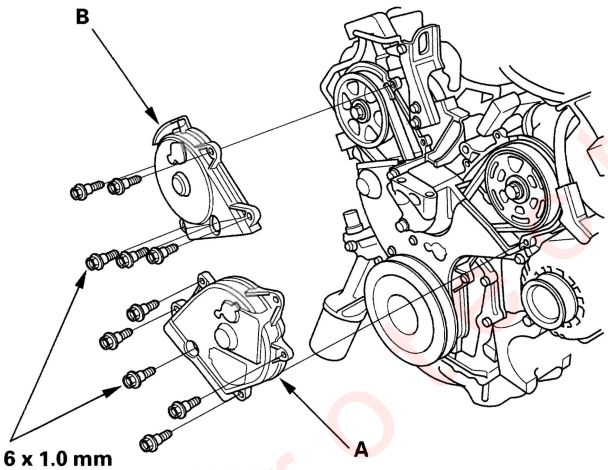

6 x 1.0 mm
12 N·m (1.2 kgf·m, 8.7 lbf·ft)

20. Rotate the crankshaft pulley about five or six turns clockwise so the timing belt positions itself on the pulleys.

21. Turn the crankshaft pulley so its white mark (A) lines up with the pointer (B).

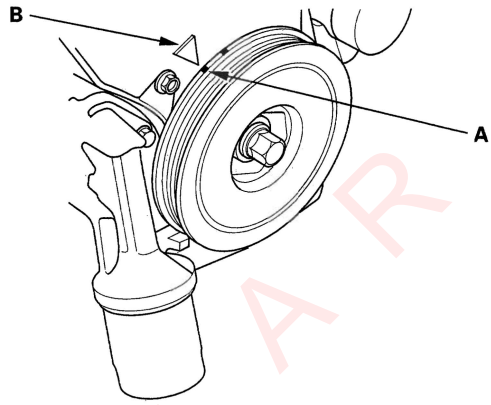

Protected by AR

22. Check the camshaft pulley marks.

    - If the camshaft pulley marks are at TDC, go to step 23.
    - If the camshaft pulley marks are not at TDC, remove the timing belt and repeat steps 2 through 22.

FRONT CAMSHAFT PULLEY:

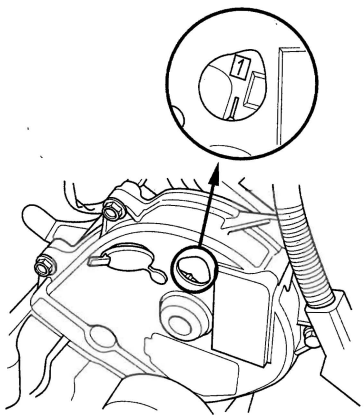

REAR CAMSHAFT PULLEY:

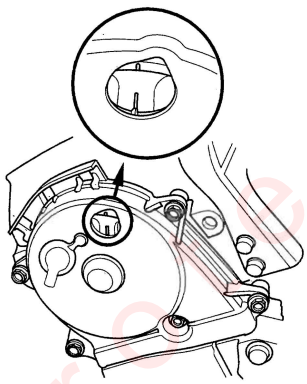

23. Install the drive belt (see page 4-29).

24. Install the side engine mount bracket (A), then tighten the bolts in the numbered sequence shown.

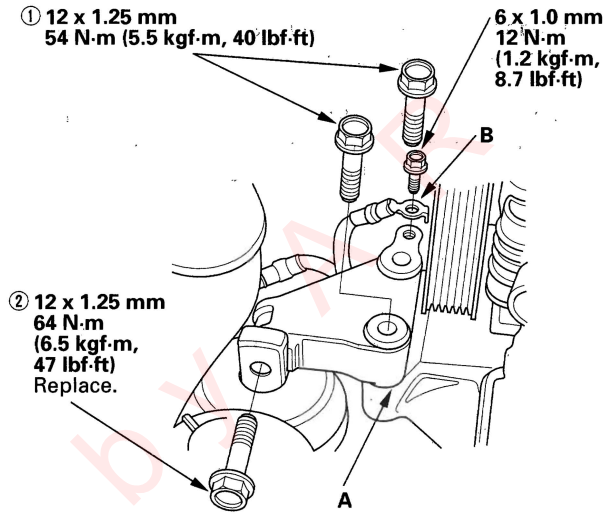

25. Install the ground cable (B).

26. Install the right front tire/wheel.

    NOTE: On M/T models be careful not to damage or chip the paint of the brake calipers when installing the wheels.

27. Perform the crankshaft position (CKP) pattern clear/CKP pattern learn procedure (see page 11-4).

(cont'd)

Protected by

Timing Belt Installation (cont'd)

Used Belt

Follow this procedure when installing a used timing belt.

1. Clean the timing belt pulleys, timing belt guide plate, and the upper and lower covers.
2. Set the timing belt drive pulley to TDC by aligning the TDC mark (A) on the tooth of the timing belt drive pulley with the pointer (B) on the oil pump.

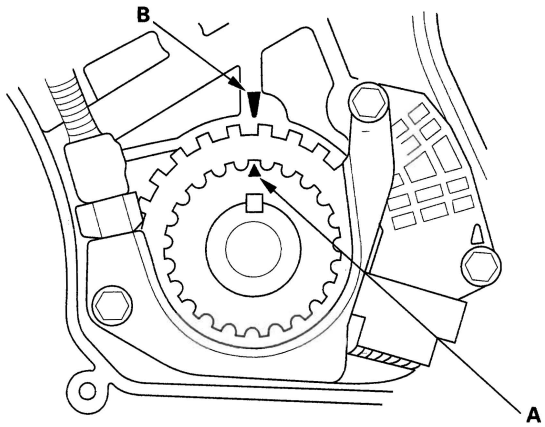

3. Set the camshaft pulleys to TDC by aligning the TDC marks (A) on the camshaft pulleys with the pointers (B) on the back covers.

FRONT:

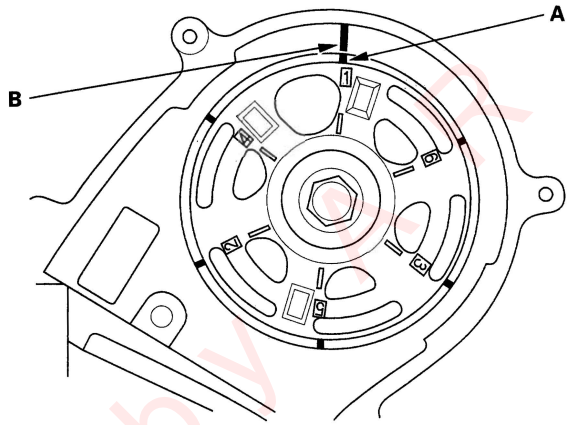

REAR:

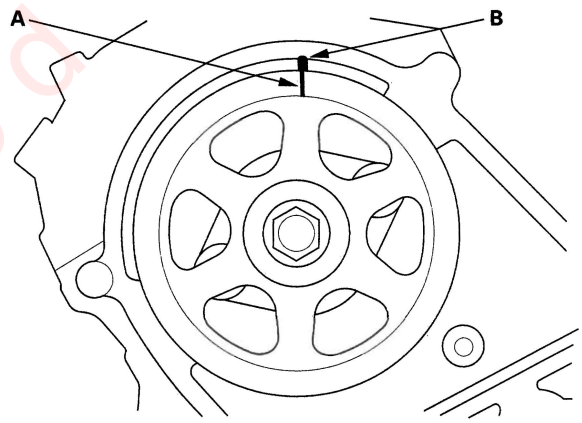

Protected by

4. Apply liquid thread lock (P/N 08713-0001) to the idler pulley bolt, then loosely install the idler pulley.

5. If the auto-tensioner has extended and the timing belt cannot be installed, perform the new belt installation procedure.

6. Install the timing belt in a counterclockwise sequence starting with the drive pulley. Take care not to damage the timing belt when installing it.

   1 Drive pulley (A).
   2 Idler pulley (B).
   3 Front camshaft pulley (C).
   4 Water pump pulley (D).
   5 Rear camshaft pulley (E).
   6 Adjusting pulley (F).

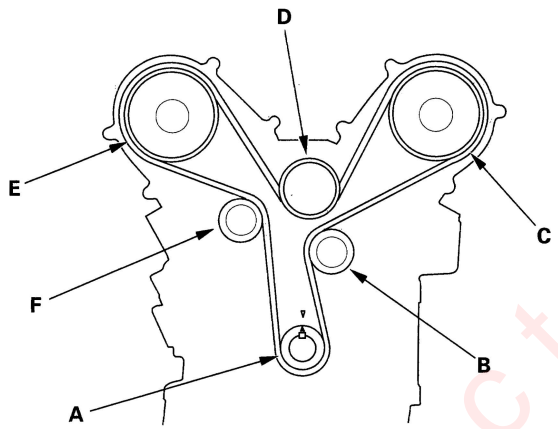

7. Tighten the idler pulley bolt.

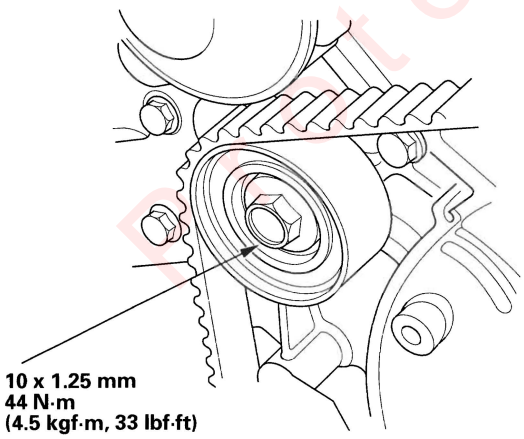

8. Remove the battery clamp bolt from the back cover.

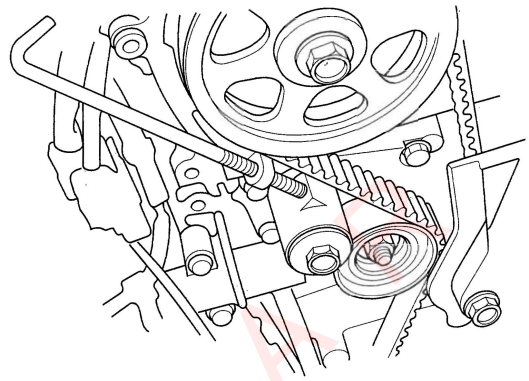

9. Install the engine mount bracket.

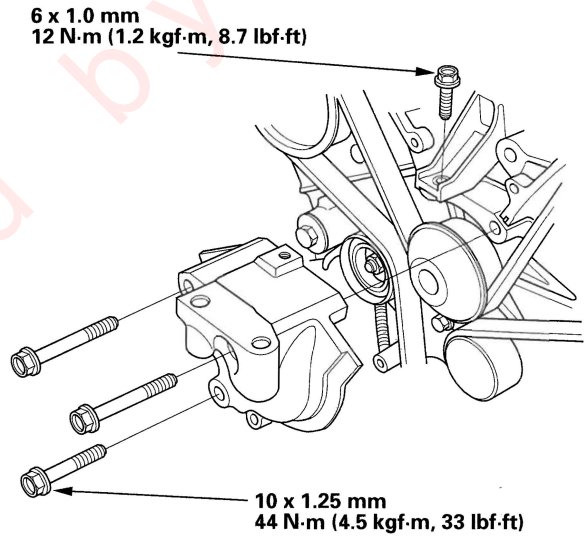

(cont'd)

Protected by A

Timing Belt Installation (cont'd)

10. Install the timing belt guide plate as shown.

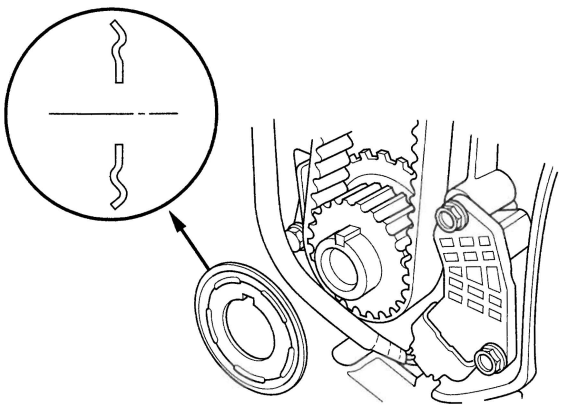

11. Install the lower cover.

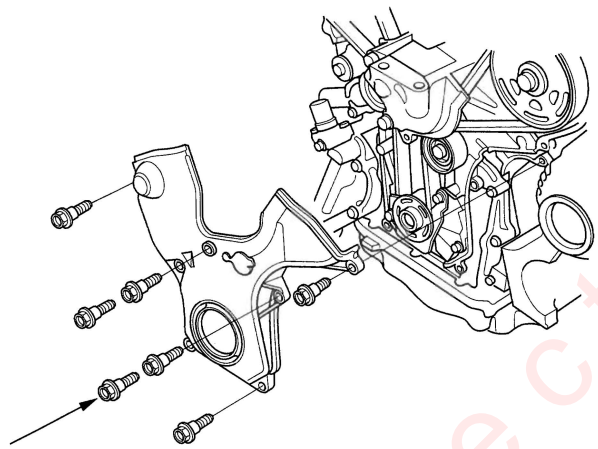

6 x 1.0 mm
12 N·m (1.2 kgf·m, 8.7 lbf·ft)

12. Install the crankshaft pulley (see page 6-12).

13. Install the front upper cover (A) and rear upper cover (B).

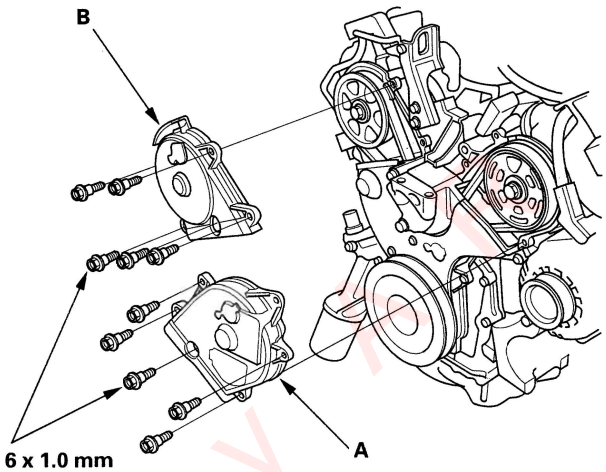

6 x 1.0 mm
12 N·m (1.2 kgf·m, 8.7 lbf·ft)

14. Rotate the crankshaft pulley about five or six turns clockwise so the timing belt positions itself on the pulleys.

15. Turn the crankshaft pulley so its white mark (A) lines up with the pointer (B).

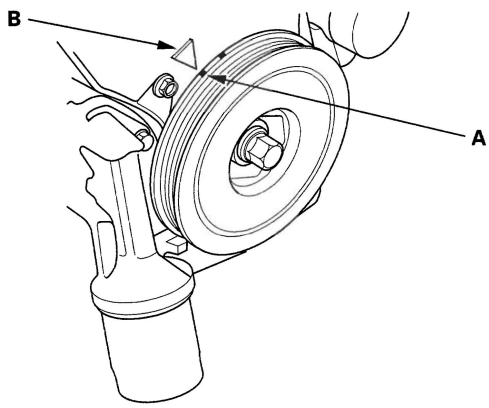

Protected by

16. Check the camshaft pulley marks.

    - If the camshaft pulley marks are at TDC, go to step 17.
    - If the camshaft pulley marks are not at TDC, remove the timing belt and repeat steps 2 through 16.

FRONT CAMSHAFT PULLEY:

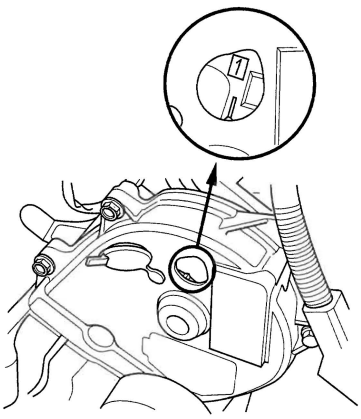

REAR CAMSHAFT PULLEY:

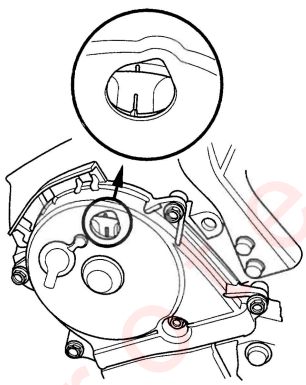

17. Install the drive belt (see page 4-29).

18. Install the side engine mount bracket (A), then tighten the bolts in the numbered sequence shown.

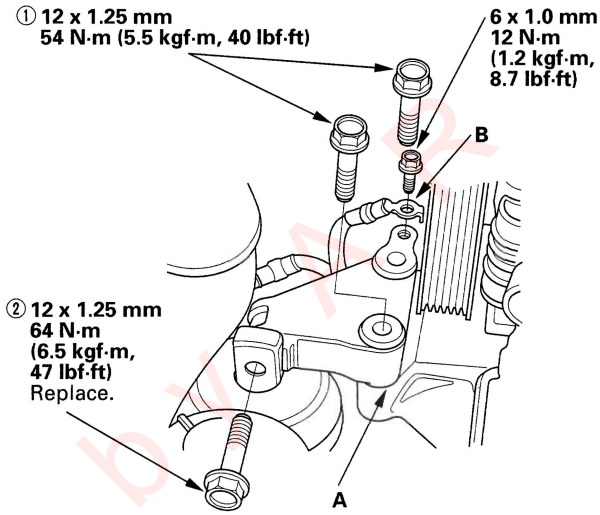

19. Install the ground cable (B).

20. Install the right front tire/wheel.

    NOTE: On M/T models be careful not to damage or chip the paint of the brake calipers when installing the wheels.

21. Perform the crankshaft position (CKP) pattern clear/CKP pattern learn procedure (see page 11-4).

Protected by ARP

Timing Belt Drive Pulley Replacement

1. Remove the timing belt (see page 6-14).
2. Remove the crankshaft position (CKP) sensor (see page 11-168).
3. Remove the timing belt drive pulley.

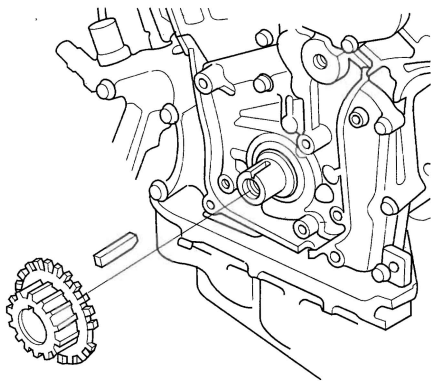

4. Install the new timing belt drive pulley.
5. Install the CKP sensor (see page 11-168).
6. Install the timing belt (see page 6-16).

Timing Belt Adjuster Replacement

1. Remove the timing belt (see page 6-14).
2. Remove the auto-tensioner (see step 5 on page 6-17).
3. Remove the bolt (A), then remove the timing belt adjuster (B) and collar (C).

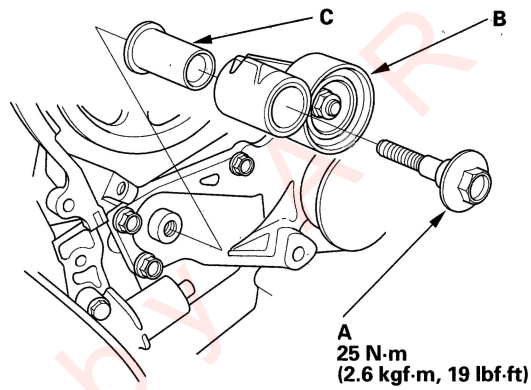

4. Install the timing belt adjuster.
5. Install the timing belt (see page 6-16).

Protected by AR

Cylinder Head Cover Removal

1. Remove the intake manifold (see page 9-3).
2. Remove the six ignition coils (see page 4-19).
3. Remove the three bolts (A) securing the harness holder, and remove the dipstick (B).

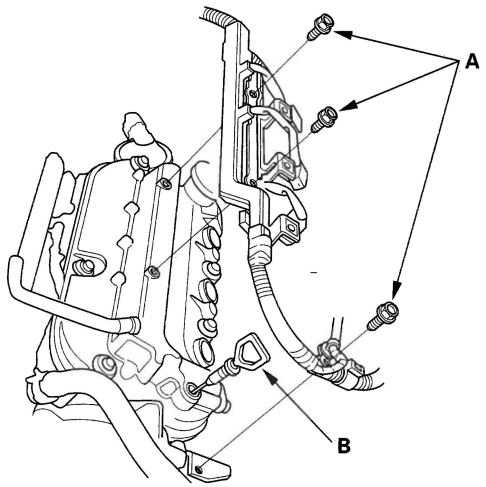

4. Remove the bolt (A) securing the power steering hose bracket.

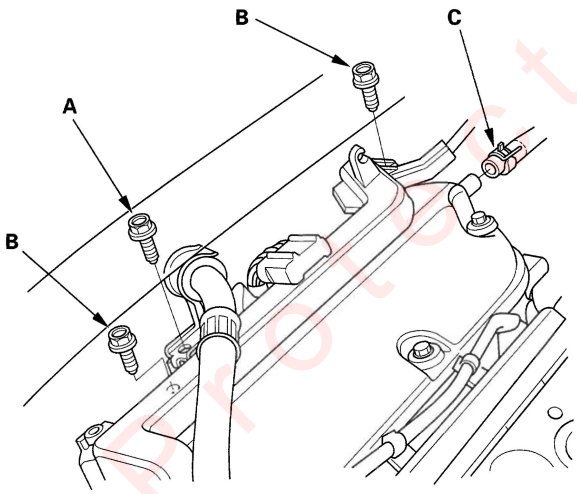

5. Remove the two bolts (B) securing the harness holder.
6. Remove the breather hose (C).
7. Remove the cylinder head covers.

FRONT:

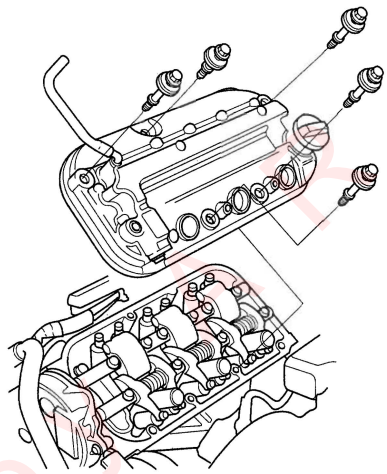

REAR:

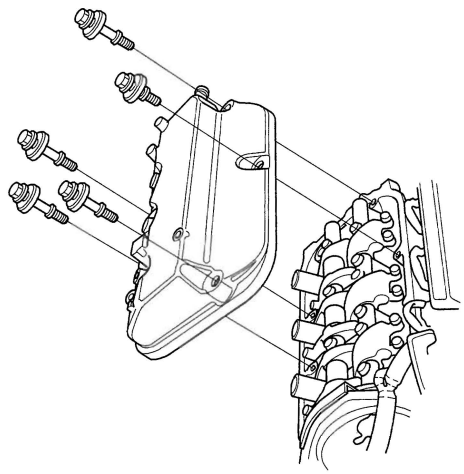

Protected by

Cylinder Head Cover Installation

1. Clean the head cover contacting surfaces with a shop towel.
2. Set the spark plug seals (A) on the spark plug tubes, and install the cylinder head covers (B).

FRONT:

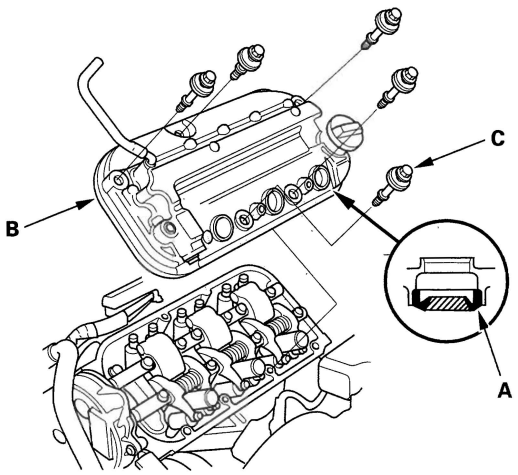

REAR:

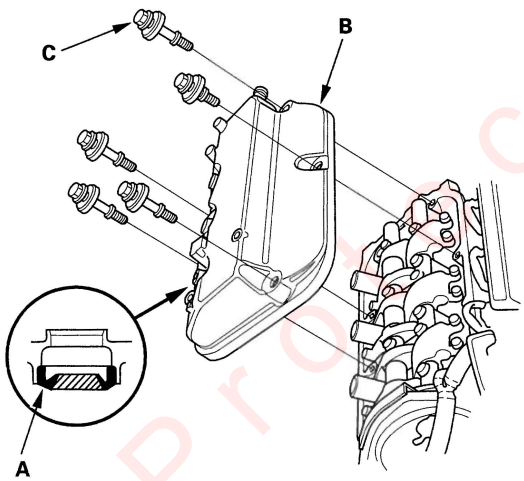

3. Visually check the spark plug seals for damage.
4. Inspect the cover washers (C). Replace any washer that is damaged or deteriorated.
5. Tighten the bolts in two or three steps. In the final step tighten all of the bolts, in sequence, 12 N·m (1.2 kgf·m, 8.7 lbf·ft) (front cover shown).

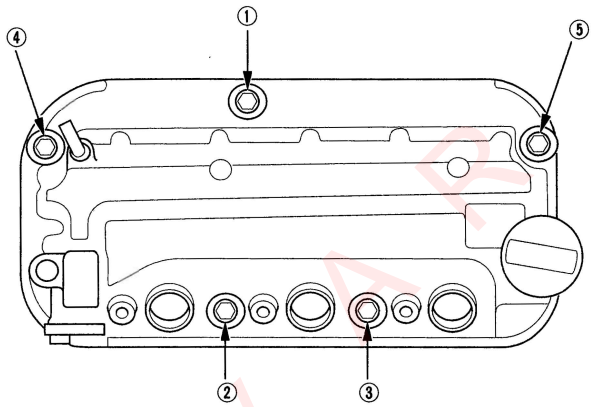

6. Install the breather hose (A).

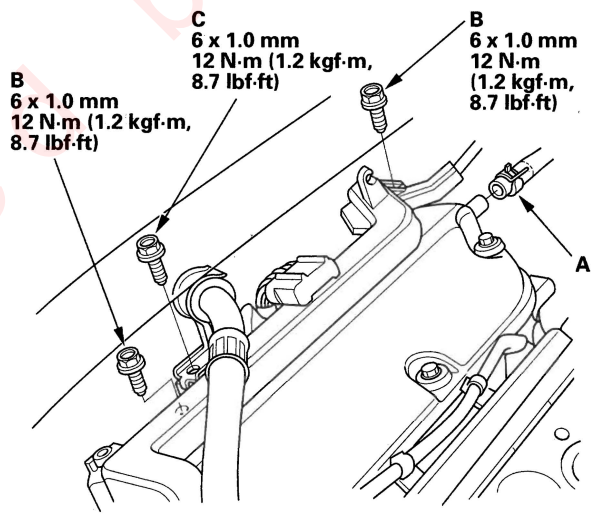

7. Tighten the two bolts (B) securing the harness holder.
8. Tighten the bolts (C) securing the power steering hose bracket.

Protected by AR

9. Tighten the three bolts (A) securing the harness holder, and install the dipstick (B).

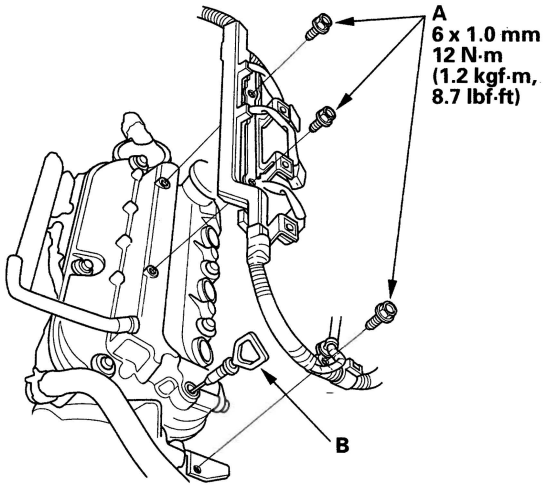

10. Install the six ignition coils (see page 4-19).

11. Install the intake manifold (see page 9-4).

Cylinder Head Removal

NOTE:
- Use fender covers to avoid damaging painted surfaces.
- To avoid damage, unplug the wiring connectors carefully while holding the connector portion.
- To avoid damaging the cylinder head, wait until the engine coolant temperature drops below 100°F (38°C) before loosening the cylinder head bolts.
- Mark all wiring and hoses to avoid misconnection. Also, be sure that they do not contact other wiring or hoses, or interfere with other parts.

1. Make sure you have the anti-theft codes for the radio and the navigation system, then write down the XM radio channel presets. Make sure the ignition switch is OFF.

2. Disconnect the battery negative cable from the battery.

3. Drain the engine coolant (see page 10-6).

4. Remove the front warm up three way catalytic converter (front WU-TWC) (see page 11-281) and rear warm up three way catalytic converter (rear WU-TWC) (see page 11-282).

5. Remove the drive belt (see page 4-29).

6. Remove the timing belt (see page 6-14).

7. Remove the power steering (P/S) pump (A), and P/S hose bracket (B).

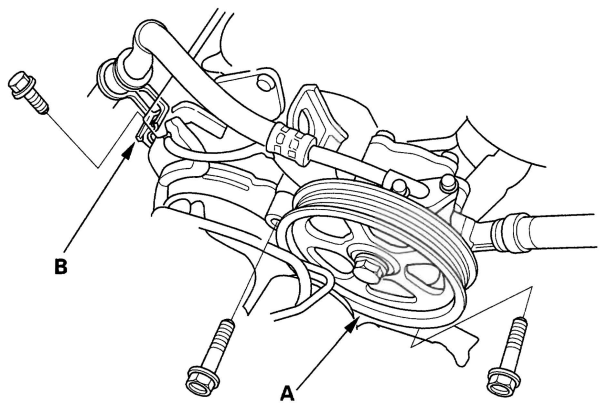

(cont'd)

Protected by

Cylinder Head Removal (cont'd)

8. Remove the alternator (see page 4-32).
9. Relieve fuel pressure (see page 11-245).
10. Remove the intake manifold (see page 9-3).
11. Remove the six ignition coils (see page 4-19).
12. Remove the engine wire harness connectors and wire harness clamps from the cylinder head.
    - Six injector connectors
    - Engine coolant temperature (ECT) sensor connector
    - Crankshaft position (CKP) sensor connector
    - Exhaust gas recirculation (EGR) valve connector
    - VTEC solenoid valve connector
    - VTEC oil pressure switch connector
    - Oil pressure switch connector
    - Two air fuel ratio (A/F) sensor connectors
    - Two secondary heated oxygen sensor (secondary HO2S) connectors
13. Remove the upper radiator hose (A) and lower radiator hose (B).

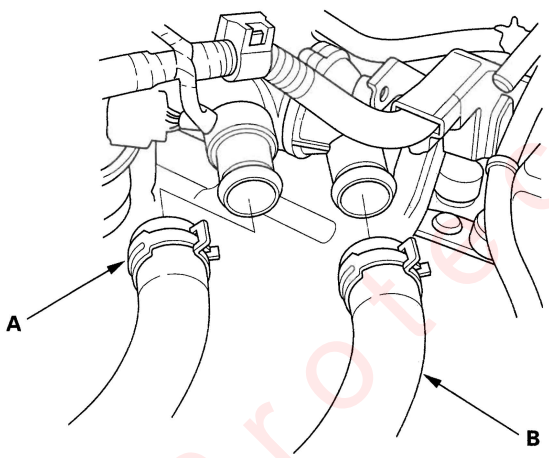

14. Remove the heater hose (A) and water bypass hose(s) (B).

M/T:

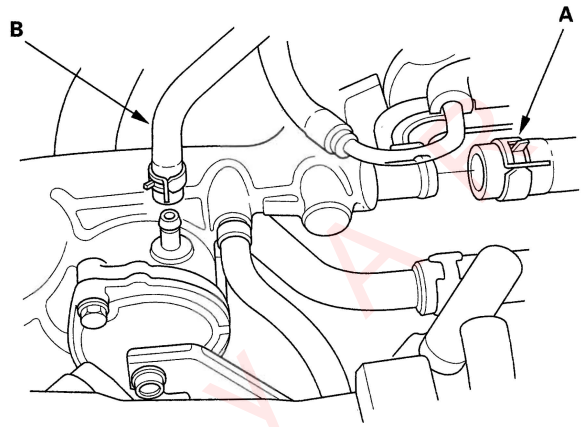

A/T:

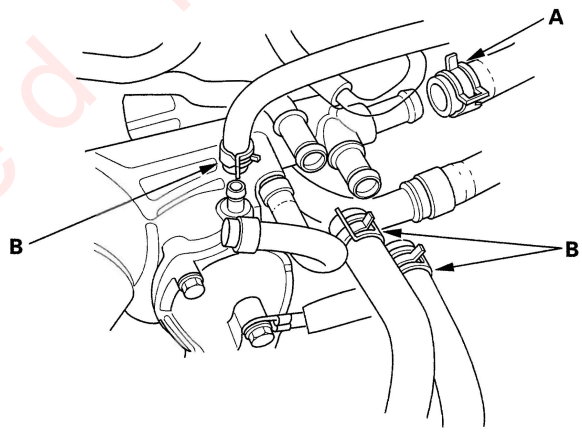

Protected by A

15. Relieve the fuel pressure (see page 11-245).

16. Remove the bolt (A) securing the harness holder.

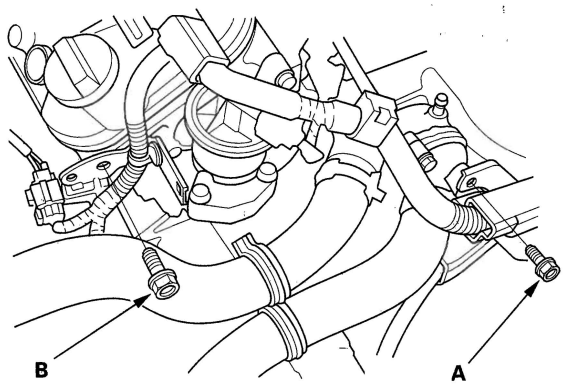

17. Remove the bolt (B) securing the harness bracket.

18. Remove the fuel rails.

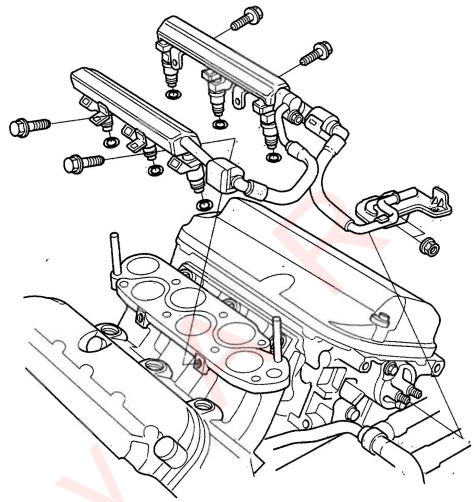

19. Remove the bolt securing the harness bracket.

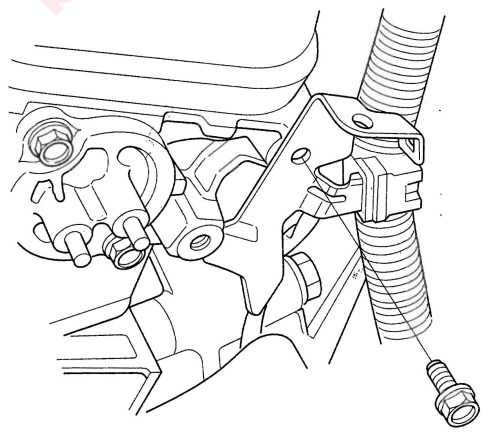

Protected by

(cont'd)

Cylinder Head Removal (cont'd)

20. Remove the water passage.

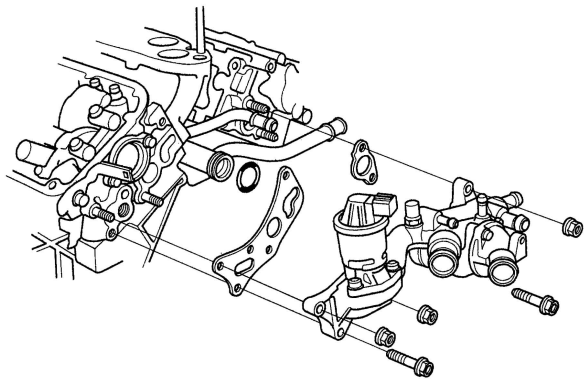

21. Remove the front and rear camshaft pulleys (A) and front and rear back covers (B).

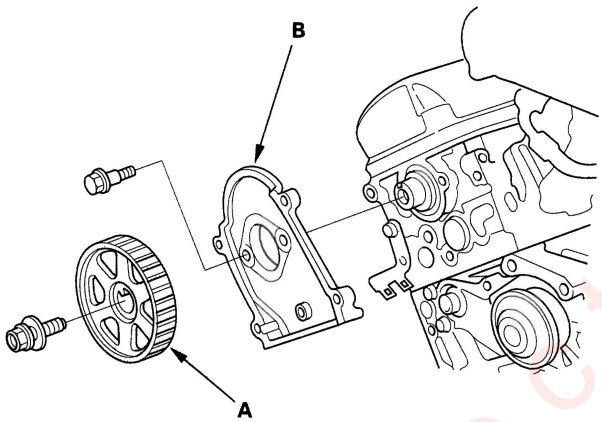

22. Remove the cylinder head covers (see page 6-27).

23. Remove the cylinder head bolts. To prevent warpage, unscrew the bolts in sequence 1/3 turn at a time; repeat the sequence until all bolts are loosened.

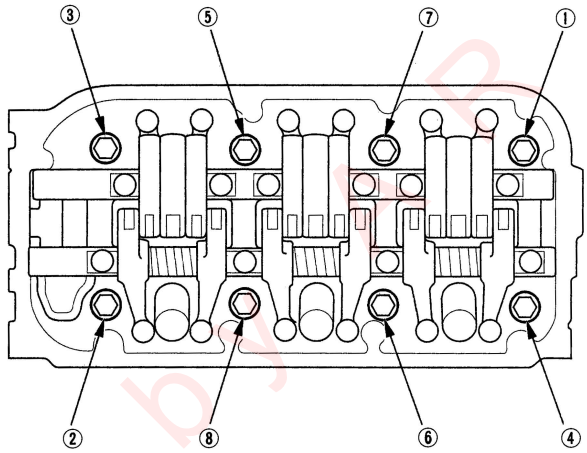

24. Remove the cylinder heads.

Protected by

Camshaft Replacement

FRONT

1. Make sure you have the anti-theft codes for the radio and the navigation system, then write down the XM radio channel presets. Make sure the ignition switch is OFF.
2. Remove the left side engine compartment cover (see step 3 on page 5-2).
3. Disconnect the negative cable from the battery first, then disconnect the positive cable.
4. Remove the battery.
5. Drain the engine coolant (see page 10-6).
6. Remove the upper radiator hose.

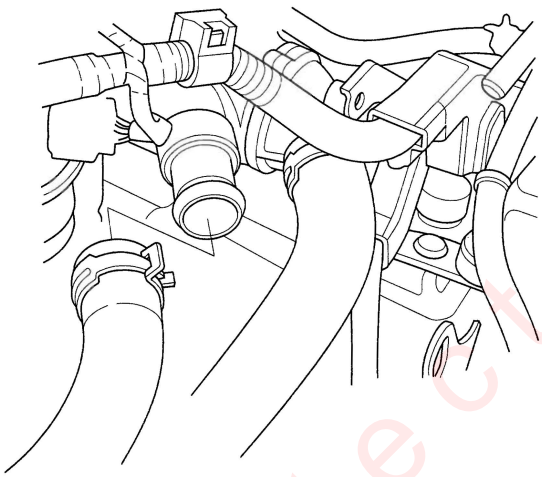

7. Remove the exhaust gas recirculation (EGR) valve (see page 11-295).
8. Remove the timing belt (see page 6-14).
9. Remove the rocker arm assembly (see page 6-35).
10. Remove the front camshaft pulley.
11. Remove the thrust cover (A), then remove the front camshaft (B).

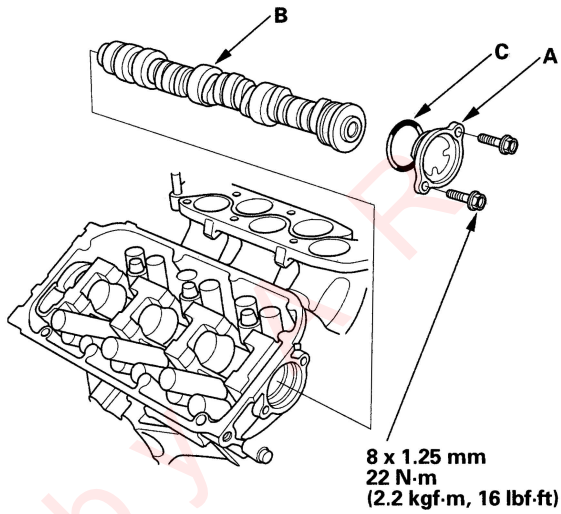

12. Install the front camshaft in the reverse order of removal. Always use a new O-ring (C). Apply new engine oil to the journals and camshaft lobes.
13. Apply new engine oil to the threads of the camshaft pulley mounting bolt, then install the front camshaft pulley (see step 10 on page 6-50).
14. Install the rocker arm assembly, then tighten the mounting bolts (see step 7 on page 6-49).
15. Install the timing belt (see page 6-16).
16. Adjust the valve clearance (see page 6-8).
17. Fill the radiator with engine coolant and bleed the air out (see step 8 on page 10-7).
18. Install the battery. Clean the battery posts and cable terminals with sandpaper, then assemble them and apply grease to prevent corrosion.
19. Perform the crankshaft position (CKP) pattern clear/ CKP pattern learn procedure (see page 11-4).
20. Enter the anti-theft codes for the radio and the navigation system, then enter the customer's XM radio channel presets. Set the clock.

(cont'd)

Protected by

Camshaft Replacement (cont'd)

REAR

1. Relieve fuel pressure (see page 11-245).
2. Make sure you have the anti-theft codes for the radio and the navigation system, then write down the XM radio channel presets. Make sure the ignition switch is OFF.
3. Remove the under-hood fuse/relay box.
4. Drain the engine coolant (see page 10-6).
5. Remove the heater hose (A), and two nuts (B) securing the fuel line.

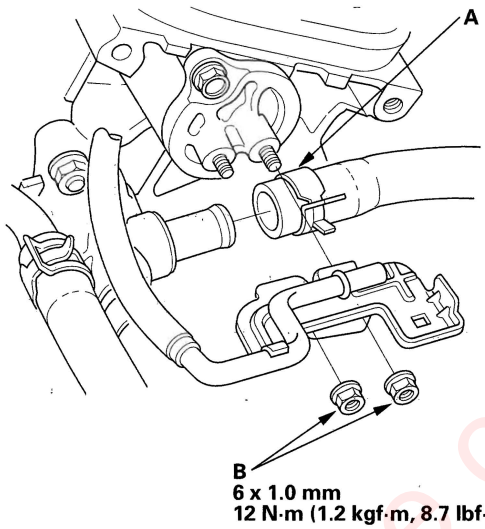

6. Remove the timing belt (see page 6-14).
7. Remove the rocker arm assembly (see page 6-35).
8. Remove the rear camshaft pulley.
9. Remove the thrust cover (A), then remove the rear camshaft (B).

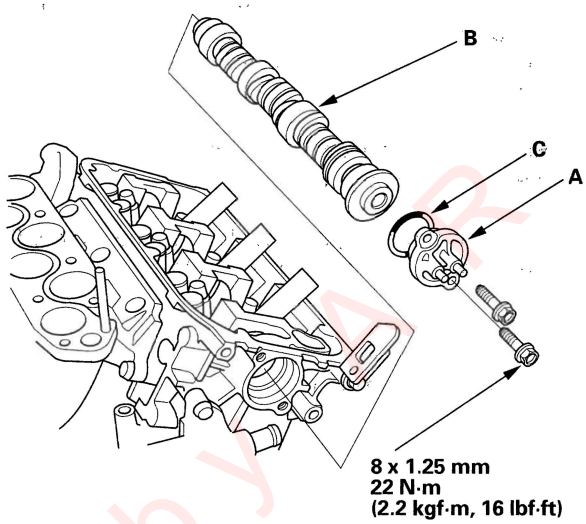

10. Install the rear camshaft in the reverse order of removal. Alway use a new O-ring (C). Apply new engine oil to the journals and camshaft lobes.
11. Apply new engine oil to the threads of the camshaft pulley mounting bolt, then install the rear camshaft pulley (see step 10 on page 6-50).
12. Install the rocker arm assembly, then tighten the mounting bolts (see step 7 on page 6-49).
13. Install the timing belt (see page 6-16).
14. Adjust the valve clearance (see page 6-8).
15. Fill the radiator with engine coolant and bleed the air out (see step 8 on page 10-7).
16. Perform the crankshaft position (CKP) pattern clear/ CKP pattern learn procedure (see page 11-4).
17. Enter the anti-theft codes for the radio and the navigation system, then enter the customer's XM radio channel presets. Set the clock.

Protected by AR

Cylinder Head Inspection for Warpage

1. Remove the cylinder head (see page 6-29).
2. Inspect the camshaft (see page 6-39).
3. Check the cylinder head for warpage. Measure along the edges, and three ways across the center.
   - If warpage is less than 0.05 mm (0.002 in.), cylinder head resurfacing is not required.
   - If warpage is between 0.05 mm (0.002 in.) and 0.2 mm (0.008 in.), resurface the cylinder head.
   - Maximum resurface limit is 0.2 mm (0.008 in.) based on a height of 121 mm (4.76 in.).

Cylinder Head Height
Standard (New): 120.95 – 121.05 mm (4.762 – 4.766 in.)

PRECISION STRAIGHT EDGE

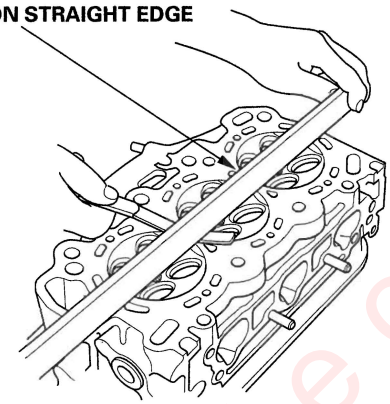

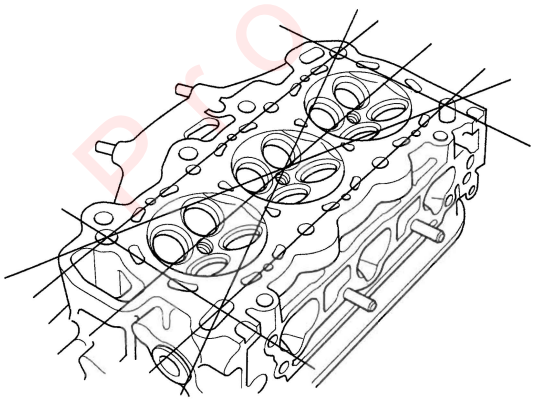

Rocker Arm Assembly Removal

1. Remove the cylinder head cover (see page 6-27).
2. Loosen the adjusting screws (A).

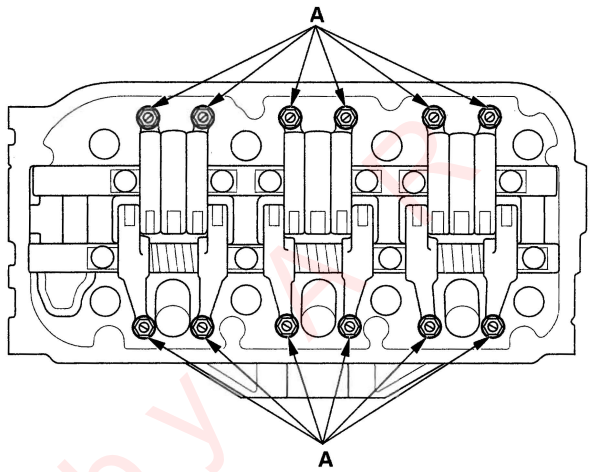

3. Remove the bolts and the rocker arm assembly.
   - 1 Unscrew the rocker shaft mounting bolts two turns at a time, in a crisscross pattern, to prevent damaging the valves or rocker arm assembly.
   - 2 When removing the rocker arm assembly, do not remove the rocker shaft mounting bolts. The bolts will keep the springs and the rocker arms on the shafts.

Camshaft Holder Bolt Loosening Sequence

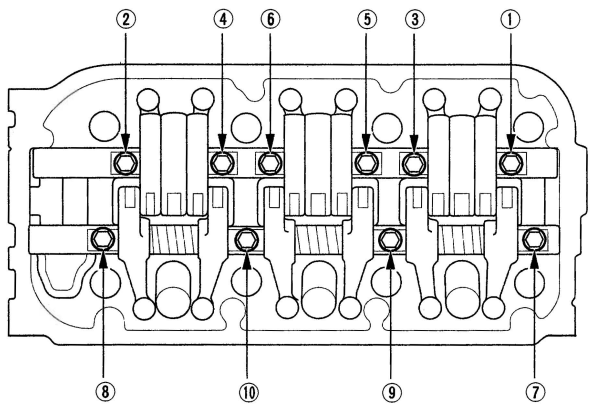

Protected by

Rocker Arm and Shaft Disassembly/Reassembly

NOTE:
- Identify parts as they are removed so they can be reinstalled in their original locations.
- Inspect the rocker shafts and rocker arms (see page 6-37).
- Rocker arms must be installed in the same positions if reused.
- When removing or installing the rocker arm assembly, do not remove the rocker shaft mounting bolts. The bolts will keep the springs and rocker arms on the shaft.
- Bundle the intake rocker arms with rubber bands to keep them together as a set.
- Prior to reassembling, clean all the parts in solvent, dry them and apply new engine oil to any contact points.

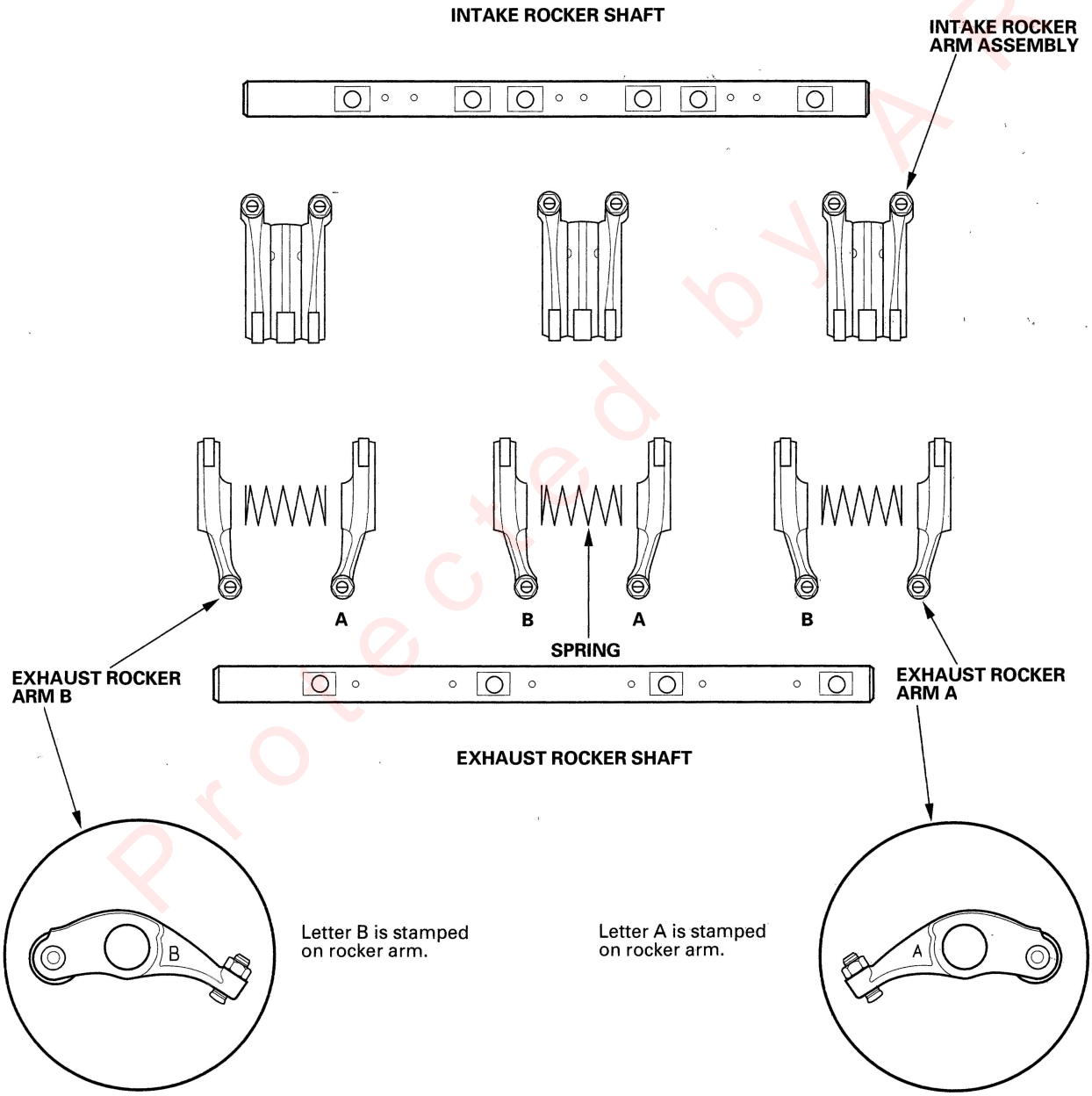

Protected by AR

Rocker Arm and Shaft Inspection

1. Remove the rocker arm assembly (see page 6-35).

2. Measure the diameter of the shaft at the first rocker location.

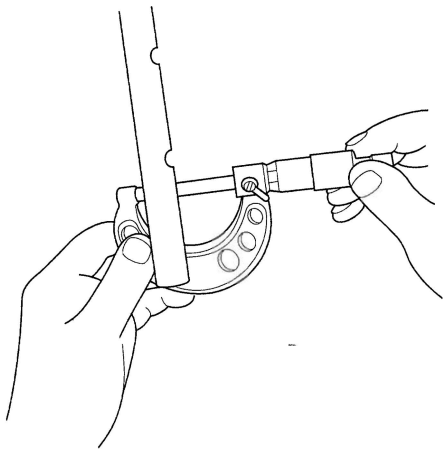

3. Zero the gauge (A) to the shaft diameter.

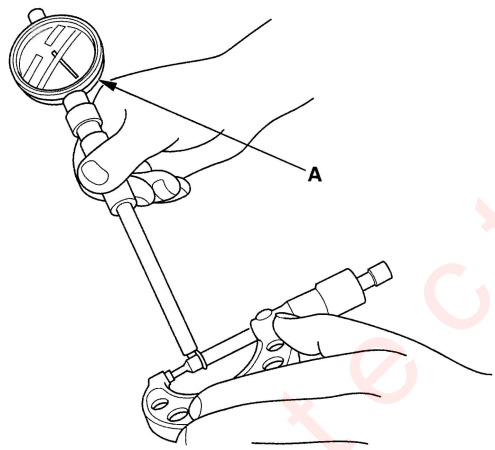

4. Measure the inside diameter of the rocker arm, and check it for an out-of-round condition.

Rocker Arm-to-Shaft Clearance
Standard (New):
Intake: 0.026–0.067 mm (0.0010–0.0026 in.)
Service Limit: 0.067 mm (0.0026 in.)
Exhaust: 0.026–0.077 mm (0.0010–0.0030 in.)
Service Limit: 0.077 mm (0.0030 in.)

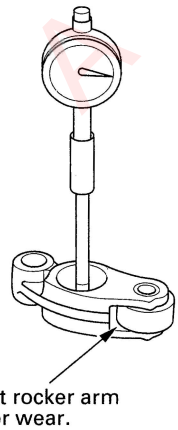

5. Repeat for all rockers and both shafts. If the clearance is over the limit, replace the rocker shaft and all over-tolerance rocker arms. If any intake rocker arm needs replacement, replace all three rocker arms in that set (primary, mid, and secondary).

(cont'd)

Protected by

Rocker Arm and Shaft Inspection (cont'd)

VTEC Rocker Arms

6. Inspect the rocker arm synchronizing pistons (A). Push them manually. If they do not move smoothly, replace the rocker arm set.

   NOTE:
   - Apply new engine oil to the pistons when reassembling.
   - When reassembling the primary rocker arm (B), carefully apply air pressure to the oil passage of the rocker arm.

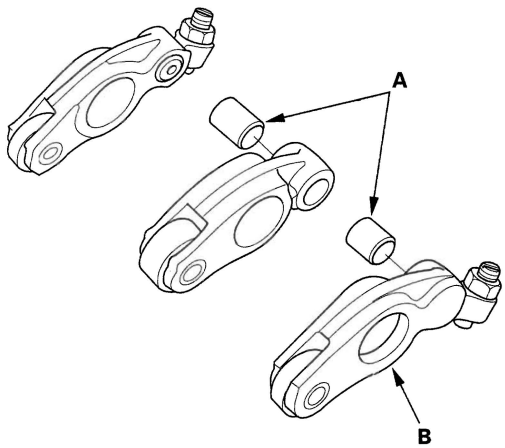

Protected by AR

Camshaft Inspection

1. Remove the cylinder head (see page 6-29).
2. Remove the rocker arms (see page 6-35).
3. Put the rocker shafts on the cylinder head, then tighten the bolts to the specified torque.

   NOTE: Apply new engine oil to the threads and flange of the exhaust rocker shaft mounting bolts.

   Specified torque:
   8 x 1.25 mm
   24 N·m (2.4 kgf·m, 17 lbf·ft)

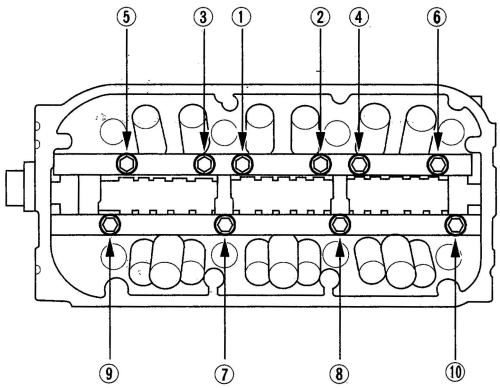

4. Seat the camshaft by pushing it toward the rear of the cylinder head.
5. Zero the dial indicator against the end of the camshaft. Push the camshaft back and forth and read the end play. If the end play is beyond the service limit, replace the thrust cover and recheck. If it is still beyond the service limit, replace the camshaft.

   Camshaft End Play
   Standard (New): 0.05—0.20 mm (0.002—0.008 in.)
   Service Limit: 0.20 mm (0.008 in.)

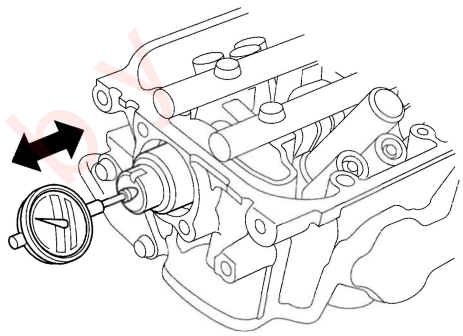

6. Remove the camshaft thrust cover (A), then pull out the camshaft (B).

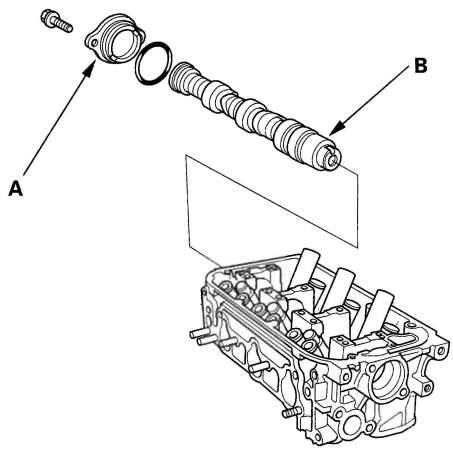

(cont'd)

Protected by AR

Camshaft Inspection (cont'd)

7. Wipe the camshaft clean, then inspect the lift ramps. Replace the camshaft if any lobes are pitted, scored, or excessively worn.

8. Measure the diameter of each camshaft journal.

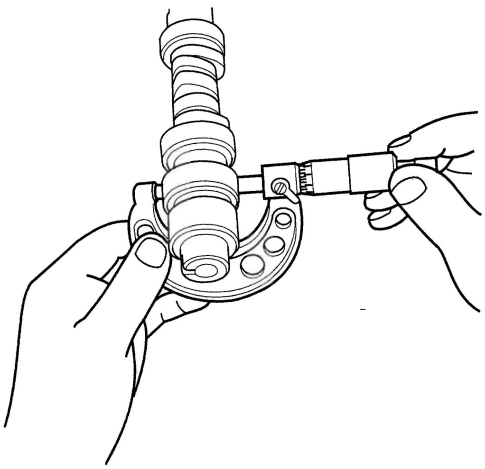

9. Zero the gauge to the journal diameter.

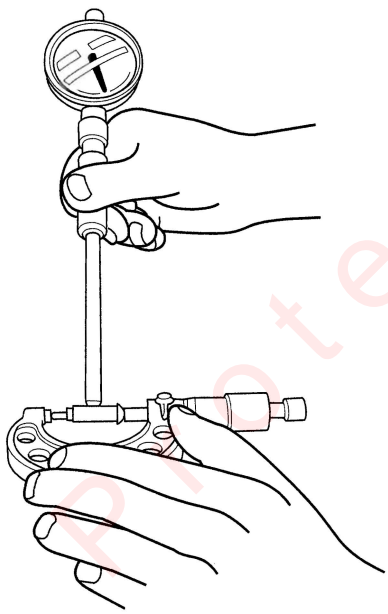

10. Clean the camshaft bearing surfaces in the cylinder head. Measure the inside diameter of each camshaft bearing surface, and check for an out-of-round condition.

- If the camshaft-to-holder clearance is within limits, go to step 12.
- If the camshaft-to-holder clearance is beyond the service limit and the camshaft has been replaced, replace the cylinder head.
- If the camshaft-to-holder clearance is beyond the service limit and the camshaft has not been replaced, go to step 11.

Camshaft-to-Holder Oil Clearance
Standard (New): 0.050–0.089 mm (0.0020–0.0035 in.)
Service Limit: 0.15 mm (0.006 in.)

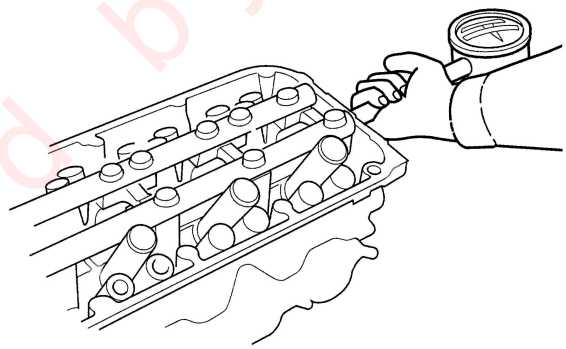

Protected by AR

11. Check total runout with the camshaft supported on V-blocks.

    - If the total runout of the camshaft is within the service limit, replace the cylinder head.
    - If the total runout is beyond the service limit, replace the camshaft and recheck the oil clearance. If the oil clearance is still out of tolerance, replace the cylinder head.

Camshaft Total Runout
Standard (New): 0.03 mm (0.001 in.) max.
Service Limit: 0.04 mm (0.002 in.)

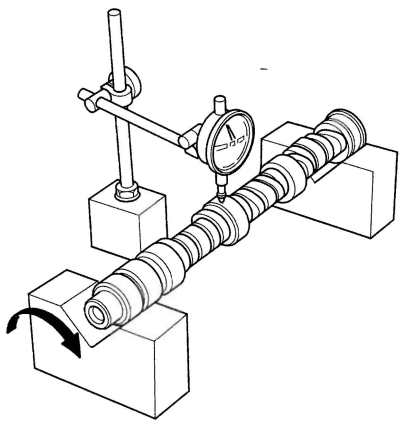

12. Measure cam lobe height.

Cam Lobe Height Standard (New):

	INTAKE	EXHAUST
PRI	35.041 mm (1.3796 in.)	36.326 mm (1.4302 in.)
MID	36.445 mm (1.4348 in.)	
SEC	35.284 mm (1.3891 in.)	

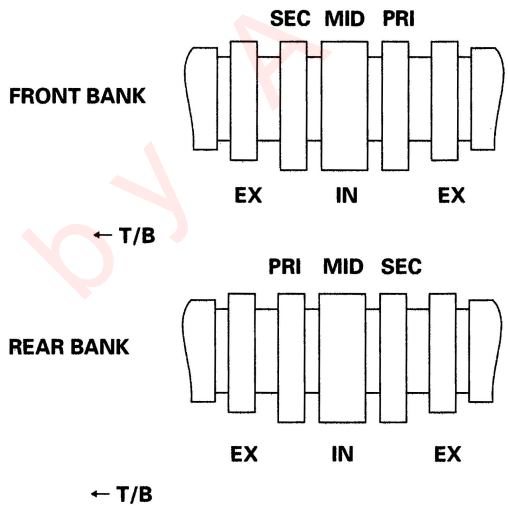

Protected by MR

Valve, Spring, and Valve Seal Removal

Special Tools Required
Valve spring compressor attachment
07757-PJ1010A

Identify the valves and valve springs as they are removed so that each item can be reinstalled in its original position.

1. Remove the cylinder head (see page 6-29).

2. Using an appropriate-sized socket (A) and plastic mallet (B), lightly tap the valve retainer to loosen the valve cotters.

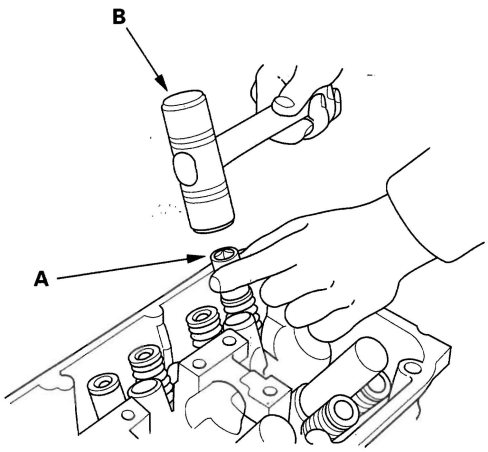

3. Install the special tool. Compress the spring and remove the valve cotters.

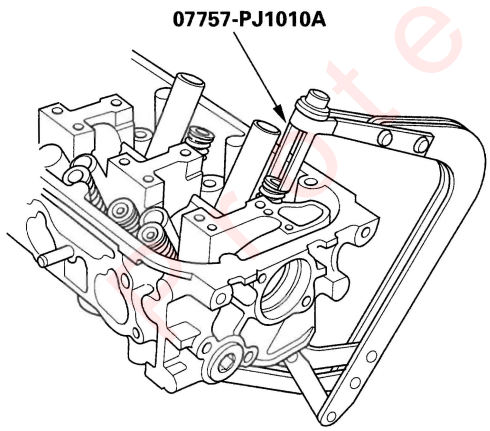

4. Remove the special tool, then remove the valve retainer, valve spring, and valve.

5. Install the valve guide seal remover (A).

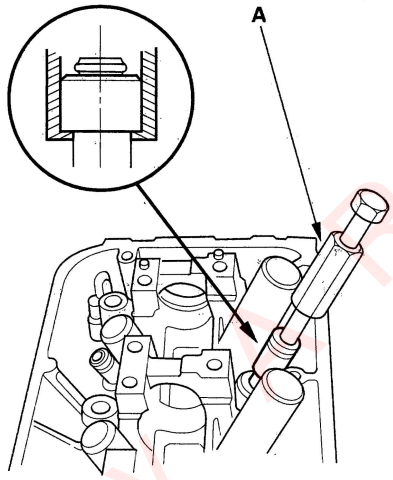

6. Remove the valve seal.

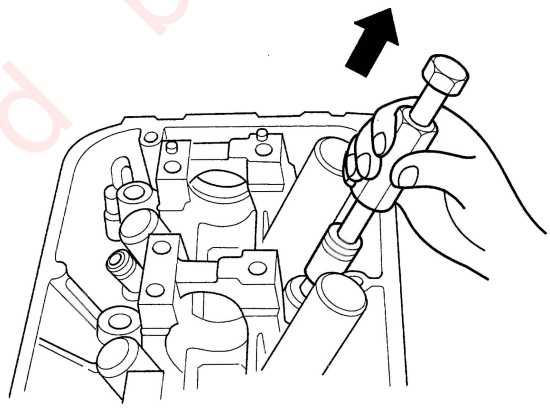

Protected by

Valve Inspection

1. Remove the valves (see page 6-42).
2. Measure the valve in these areas.

Intake Valve Dimensions

A Standard (New):	**34.90—35.10 mm (1.374—1.382 in.)**
B Standard (New):	**115.70—116.30 mm (4.555—4.579 in.)**
C Standard (New):	**5.485—5.495 mm (0.2159—0.2163 in.)**
C Service Limit:	**5.455 mm (0.2148 in.)**

Exhaust Valve Dimensions

A Standard (New):	**29.90—30.10 mm (1.177—1.185 in.)**
B Standard (New):	**113.90—114.50 mm (4.484—4.508 in.)**
C Standard (New):	**5.450—5.460 mm (0.2146—0.2150 in.)**
C Service Limit:	**5.420 mm (0.2134 in.)**

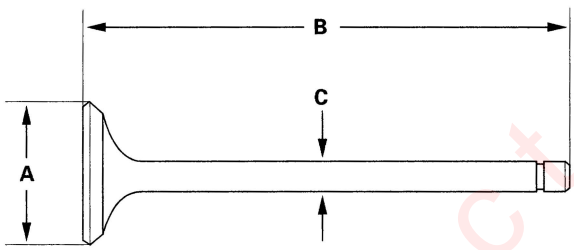

Valve Stem-to-Guide Clearance Inspection

1. Remove the valves (see page 6-42).
2. Slide the valve out of its guide about 10 mm (0.39 in.), then measure the guide-to-stem clearance with a dial indicator while rocking the stem in the direction of normal thrust (wobble method).

   - If the measurement exceeds the service limit, recheck it using a new valve.
   - If the measurement is now within the service limit, reassemble using a new valve.
   - If the measurement with a new valve still exceeds the service limit, go to step 3.

Intake Valve Stem-to-Guide Clearance

Standard (New):	**0.04—0.09 mm (0.002—0.004 in.)**
Service Limit:	**0.16 mm (0.006 in.)**

Exhaust Valve Stem-to-Guide Clearance

Standard (New):	**0.11—0.16 mm (0.004—0.006 in.)**
Service Limit:	**0.22 mm (0.009 in.)**

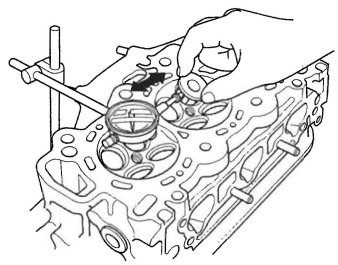

3. Subtract the O.D. of the valve stem, measured with a micrometer, from the I.D. of the valve guide, measured with an inside micrometer or ball gauge. Take the measurements in three places along the valve stem and three places inside the valve guide. The difference between the largest guide measurement and the smallest stem measurement should not exceed the service limit.

Intake Valve Stem-to-Guide Clearance

Standard (New):	**0.020—0.045 mm (0.0008—0.0018 in.)**
Service Limit:	**0.08 mm (0.003 in.)**

Exhaust Valve Stem-to-Guide Clearance

Standard (New):	**0.055—0.080 mm (0.0022—0.0031 in.)**
Service Limit:	**0.11 mm (0.004 in.)**

Protected by CR

Valve Guide Replacement

Special Tools Required
- Valve guide driver, 5.5 mm 07742-0010100
- Valve guide reamer, 5.5 mm 07HAH-PJ7A100

1. Inspect valve stem-to-guide clearance (see page 6-43).

2. As illustrated, use a commercially available air-impact valve guide driver (A) modified to fit the diameter of the valve guides. In most cases, the same procedure can be done using the special tool and a conventional hammer.

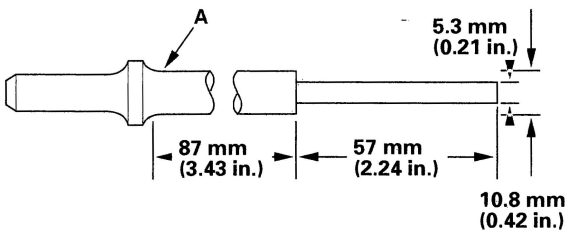

3. Select the proper replacement guides, and chill them in the freezer section of a refrigerator for about an hour.

4. Use a hot plate or oven to evenly heat the cylinder head to 300°F (150°C). Monitor the temperature with a cooking thermometer. Do not get the head hotter than 300°F (150°C); excessive heat may loosen the valve seats.

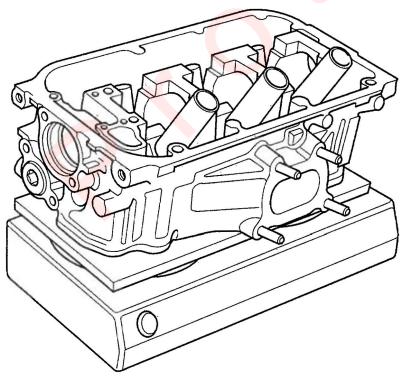

5. Working from the camshaft side, use the driver and an air hammer to drive the guide about 2 mm (0.1 in.) towards the combustion chamber. This will knock off some of the carbon and make removal easier. Hold the air hammer directly in line with the valve guide to prevent damaging the driver. Wear safety goggles or a face shield.

6. Turn the head over, and drive the guide out toward the camshaft side of the head.



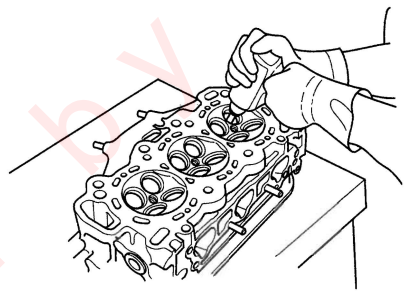

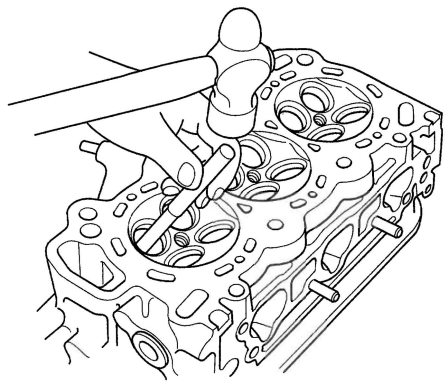

7. If a valve guide still won't move, drill it out with a 8 mm (5/16 in.) bit, then try again.

   NOTE: Drill guides only in extreme cases; you could damage the cylinder head if the guide breaks.

8. Remove the new guide(s) from the freezer, one at a time, as you need them.

Protected by AR

9. Apply a thin coat of clean engine oil to the outside of the new valve guide. Install the guide from the camshaft side of the head; use the special tool to drive the guide to the specified installed height (A) of the guide (B). If you have all 12 guides to do, you may have to reheat the head.

Valve Guide Installed Height
Intake: 21.20–22.20 mm (0.835–0.874 in.)
Exhaust: 20.60–21.60 mm (0.811–0.850 in.)

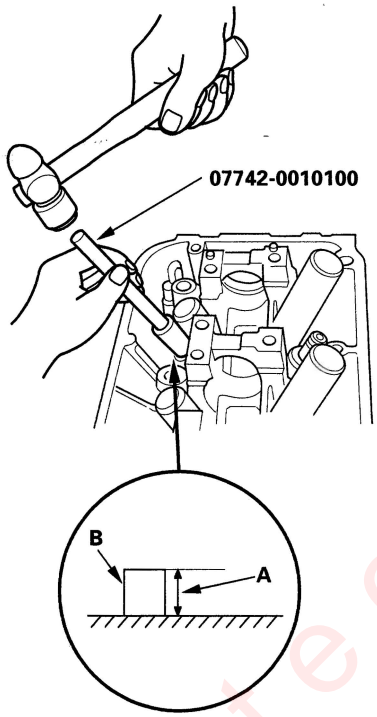

10. Coat both the reamer and the valve guide with cutting oil.

11. Rotate the reamer clockwise the full length of the valve guide bore.

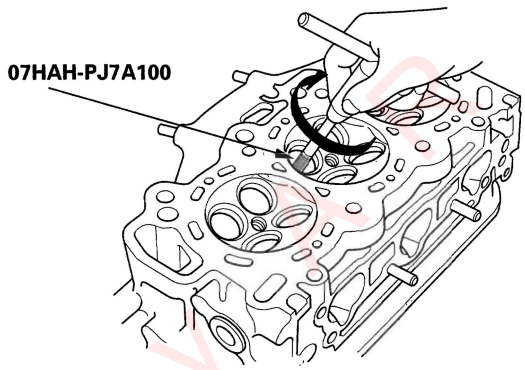

12. Continue to rotate the reamer clockwise while removing it from the bore.

13. Thoroughly wash the guide in detergent and water to remove any cutting residue.

14. Check the clearance with a valve (see page 6-43). Verify that a valve slides in the intake and exhaust valve guides without exerting pressure.

Protected by

Valve Seat Reconditioning

1. Inspect valve stem-to-guide clearance (see page 6-43). If the valve guides are worn, replace them (see page 6-44) before cutting the valve seats.

2. Renew the valve seats in the cylinder head using a valve seat cutter.

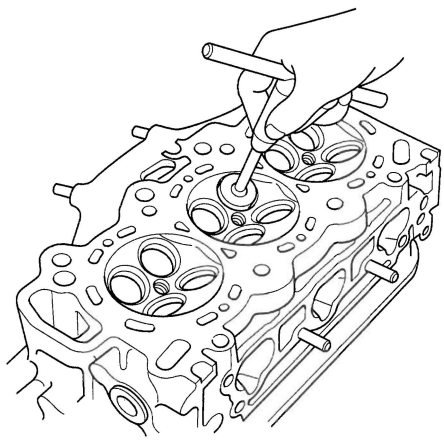

3. Carefully cut a 45° seat, removing only enough material to ensure a smooth and concentric seat.

4. Bevel the upper edge of the seat with the 30° cutter and the lower edge of the seat with the 67.5° cutter (intake seat) or the 60° cutter (exhaust seat). Check the width of the seat and adjust accordingly.

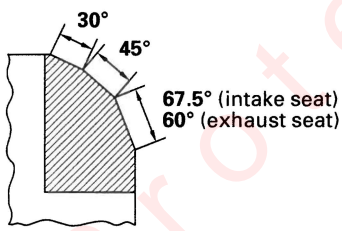

5. Make one more very light pass with the 45° cutter to remove any possible burrs caused by the other cutters.

Valve Seat Width
Standard (New): 1.25—1.55 mm (0.049—0.061 in.)
Service Limit: 2.00 mm (0.079 in.)

6. After resurfacing the seat, inspect it for even valve seating. Apply Prussian Blue compound (A) to the valve face. Insert the valve in its original location in the head, then lift it and snap it closed against the seat several times.

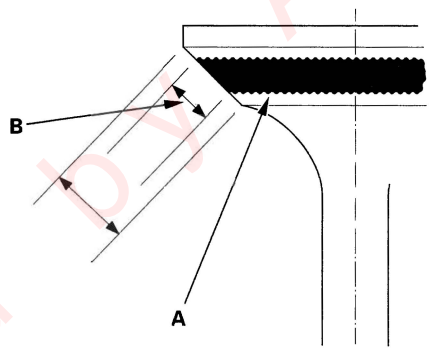

7. The actual valve seating surface (B), as shown by the blue compound, should be centered on the seat.

   - If it is too high (closer to the valve stem), you must make a second cut with the 67.5° cutter (intake seat) or the 60° cutter (exhaust seat) to move it down, then one more cut with the 45° cutter to restore seat width.
   - If it is too low (closer to the valve edge), you must make a second cut with the 30° cutter to move it up, then one more cut with the 45° cutter to restore seat width.

   NOTE: The final cut should always be made with the 45° cutter.

Protected by A

8. Insert the intake and exhaust valves in the head, and measure the valve stem installed height (A).

Intake Valve Stem Installed Height
Standard (New): 46.75—47.55 mm (1.841—1.872 in.)
Service Limit: 47.80 mm (1.882 in.)

Exhaust Valve Stem Installed Height
Standard (New): 46.68—47.48 mm (1.838—1.869 in.)
Service Limit: 47.73 mm (1.879 in.)

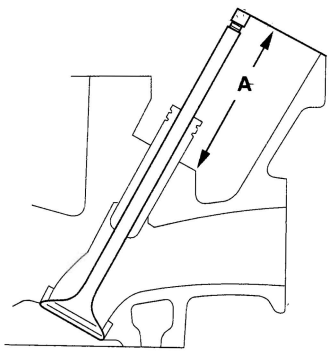

9. If the valve stem installed height is over the service limit, replace the valve and recheck. If it is still over the service limit, replace the cylinder head; the valve seat in the head is too deep.

Protected by AR

Valve, Spring, and Valve Seal Installation

Special Tools Required
- Stem seal driver 07PAD-0010000
- Valve spring compressor attachment 07757-PJ1010A

1. Coat the valve stems with new engine oil. Install the valves in the valve guides.
2. Check that the valves move up and down smoothly.
3. Install the spring seats on the cylinder head.
4. Install the new valve seals (A) using the valve guide seal installer (B).

   NOTE: Exhaust valve seals (C) have a black spring (D) and intake valve seals (E) have a white spring (F); they are not interchangeable.

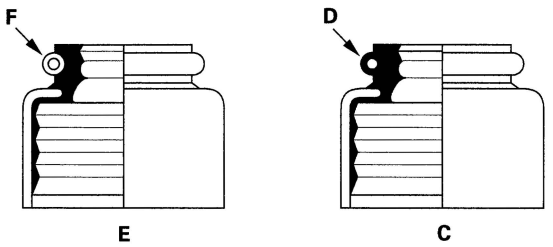

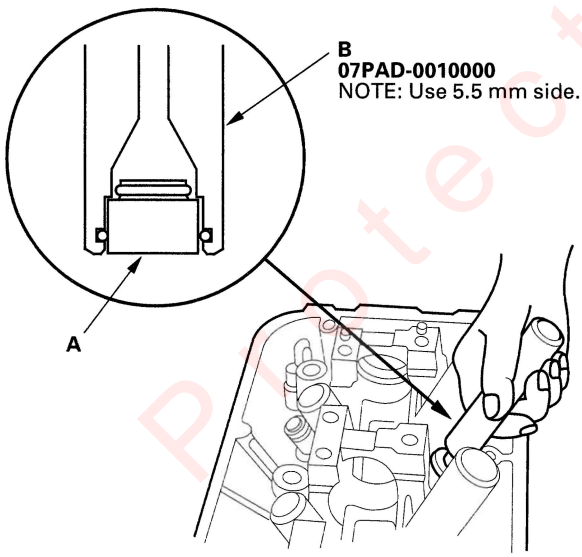

5. Install the valve spring and valve retainer. Place the end of the valve spring with closely wound coils toward the cylinder head.
6. Install the valve spring compressor. Compress the spring and install the valve cotters.

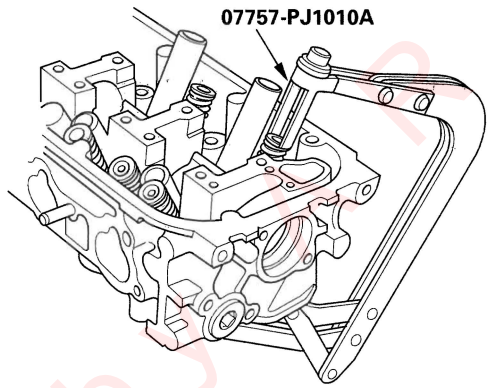

7. Remove the valve spring compressor.
8. Lightly tap the end of each valve stem two or three times with a plastic mallet (A) to ensure proper seating of the valve and valve cotters. Tap the valve stem only along its axis so you do not bend the stem.



Protected by

Camshaft, Rocker Arm, Camshaft Seal, and Pulley Installation

1. Apply a light coat of new engine oil around the camshaft oil seal.

2. Gently tap the new camshaft oil seal (A) into the cylinder head.

   -1 Tap the camshaft oil seal in squarely.
   -2 Install the oil seal about 0.5 —1.5 mm (0.02—0.06 in.) below the surface of the cylinder head.

FRONT:

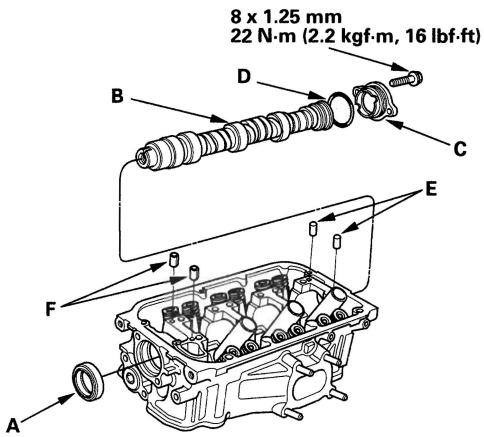

REAR:

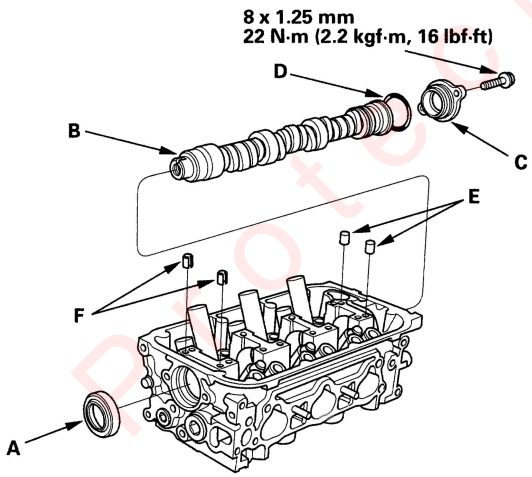

3. Insert the camshaft (B) into the cylinder head, then install the camshaft thrust cover (C). Always use a new O-ring (D). Apply new engine oil to the camshaft journals and lobes.

4. Check that the oil seal lips are not distorted.

5. Install the solid dowel pins (E) and the hollow dowel pins (F).

6. Loosen the valve adjusting screws.

7. Set the rocker arm assembly in place, and loosely install the bolts. Make sure that the rocker arms are properly positioned on the valve stems.

8. Tighten each bolt two turns at a time in the sequence shown to ensure that the rockers do not bind on the valves.

   NOTE: Apply new engine oil to the threads and flange of the exhaust rocker shaft mounting bolts.

   Specified torque:
   8 x 1.25 mm
   24 N·m (2.4 kgf·m, 17 lbf·ft)

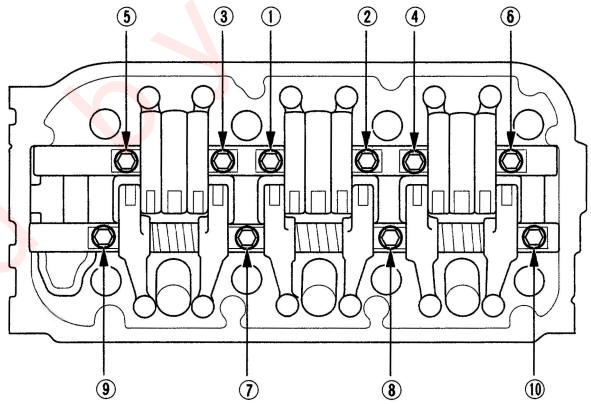

9. Install the injector base (A). Always use a new gasket (B).

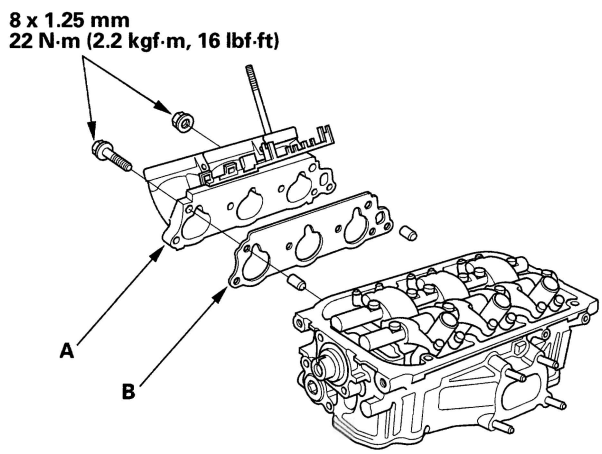

(cont'd)

Protected by AR

Camshaft, Rocker Arm, Camshaft Seal, and Pulley Installation (cont'd)

10. Apply new engine oil to the threads of the camshaft pulley mounting bolt (A). Install the back cover (B), then install the camshaft pulley (C).

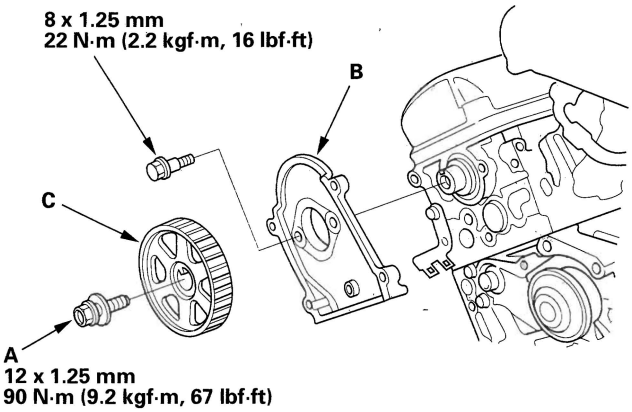

Cylinder Head Installation

1. Clean the cylinder head and block surface.
2. Clean and install the oil control orifices (A) with new O-rings (B).

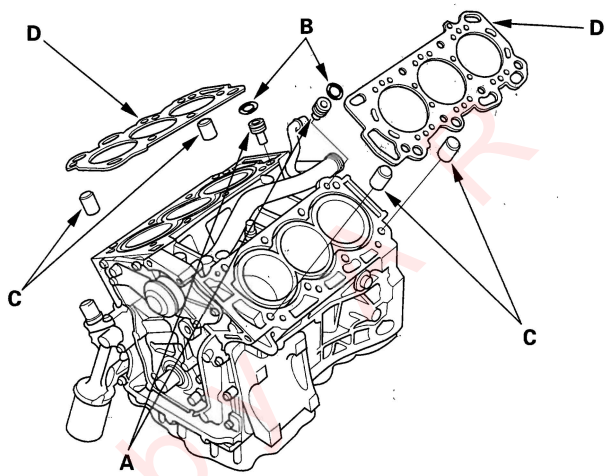

3. Install the dowel pins (C) and new cylinder head gaskets (D).

Protected by

4. Clean the timing belt pulleys, timing belt guide plate, and the upper and lower covers.

5. Set the timing belt drive pulley to top dead center (TDC) by aligning the TDC mark (A) on the tooth of the timing belt drive pulley with the pointer (B) on the oil pump.

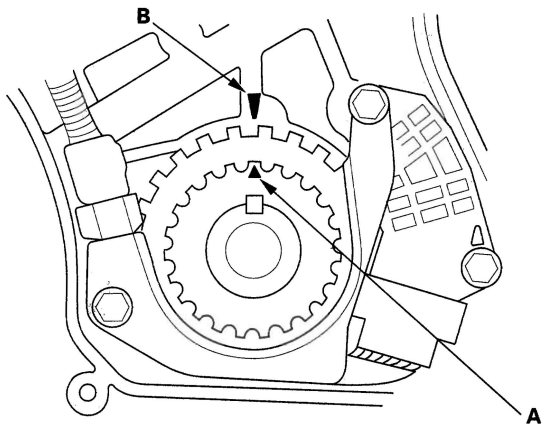

6. Set the camshaft pulleys to TDC by aligning the TDC marks (A) on the camshaft pulleys with the pointers (B) on the back covers.

FRONT:

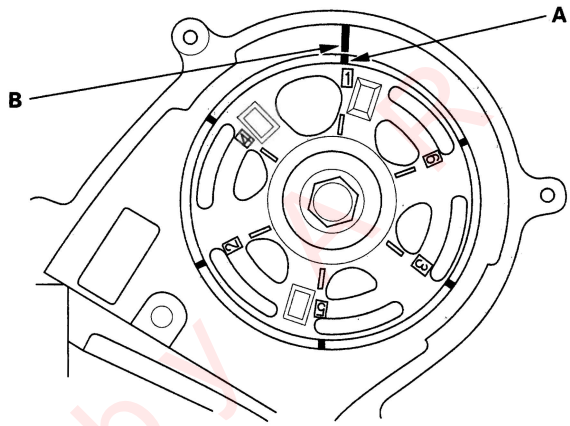

REAR:

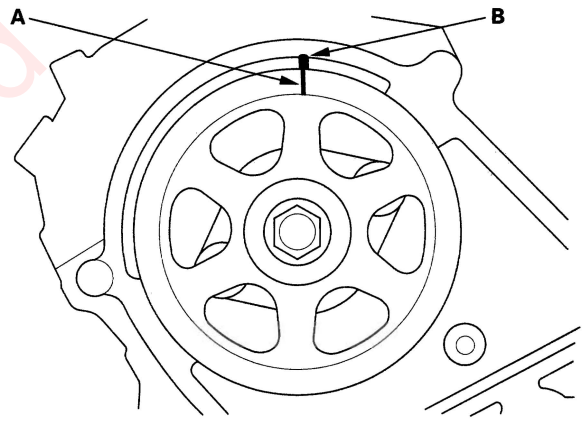

Protected by Copyright

(cont'd)

Cylinder Head Installation (cont'd)

7. Apply new engine oil to the threads and flanges of the cylinder head bolts.

8. Tighten the cylinder head bolts sequentially in three steps.

   NOTE: Perform each step twice.

   1st step torque: 39 N·m (4.0 kgf·m, 29 lbf·ft)
   2nd step torque: 69 N·m (7.0 kgf·m, 51 lbf·ft)
   3rd step torque: 98.1 N·m (10.0 kgf·m, 72.3 lbf·ft)

   Use a beam-type torque wrench. When using a preset-type torque wrench, be sure to tighten slowly and not to overtighten. If a bolt makes any noise while you are torquing it, loosen the bolt, and retighten it from the 1st step.

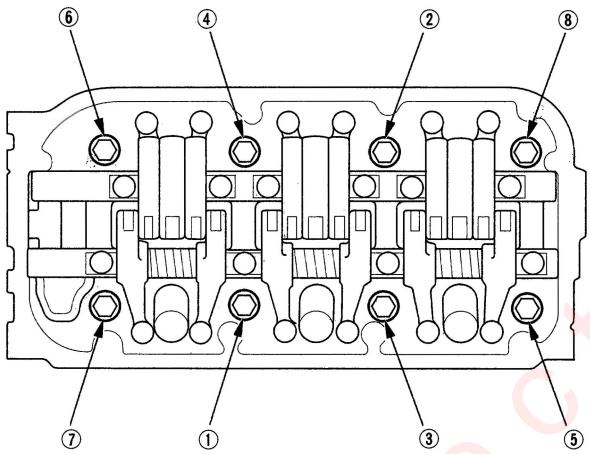

9. Install the water passage (A). Always use a new O-ring (B) and new gaskets (C).

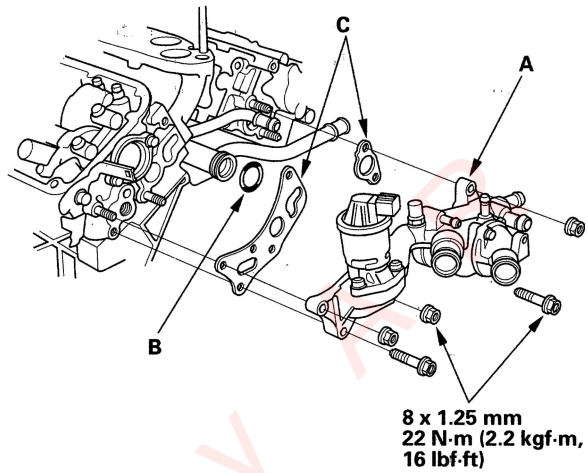

10. Install the front and rear warm up three way catalytic converter (WU-TWC) (see page 11-281).

Protected by

11. Set the new O-rings to the injectors, then install the fuel rails.

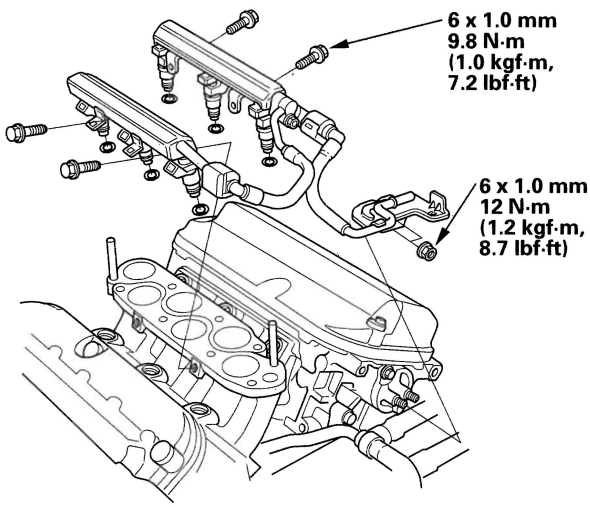

12. Connect the fuel feed hose (see page 11-253), then install the quick-connect fitting cover (A).

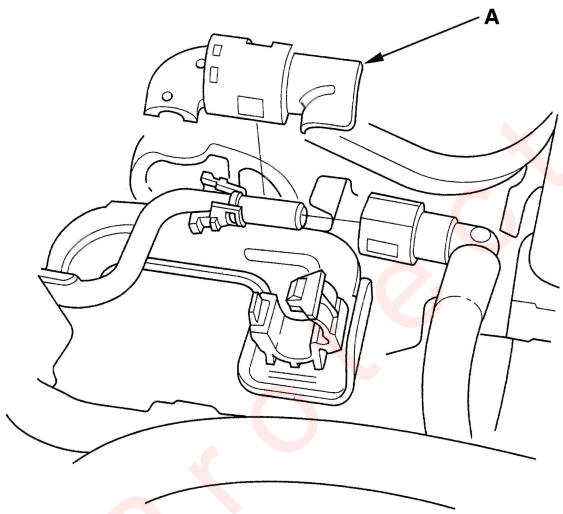

13. Tighten the bolt (A) securing the harness holder.

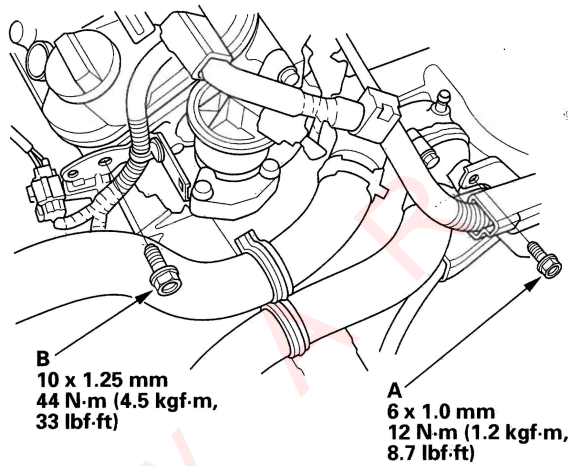

14. Tighten the bolt (B) securing the harness bracket.

15. Tighten the bolt securing the harness bracket.

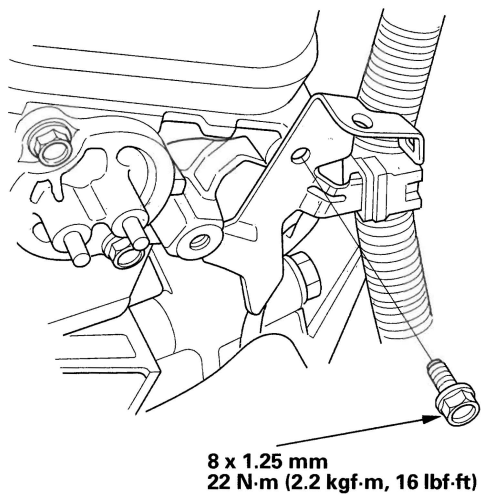

(cont'd)

Protected by AR

Cylinder Head Installation (cont'd)

16. Install the heater hose (A) and water bypass hose(s) (B).

M/T:

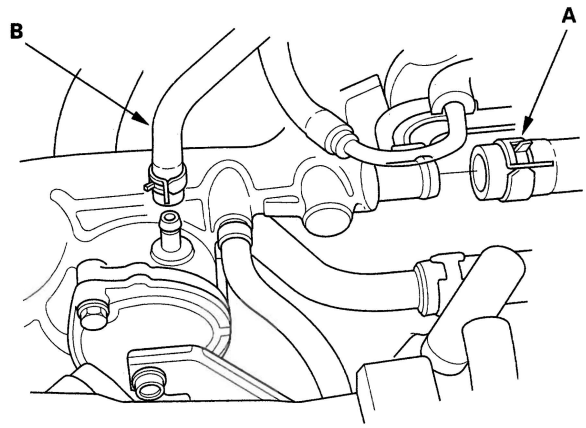

A/T:

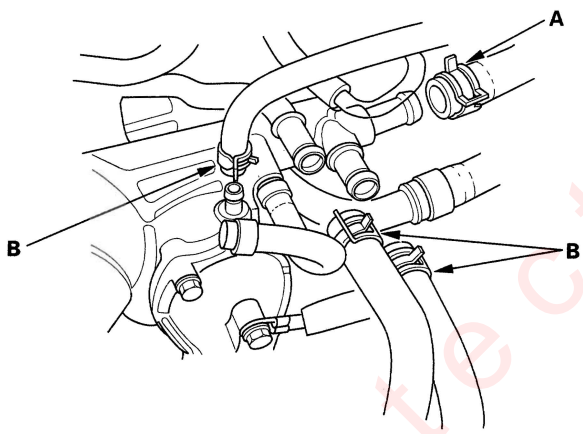

17. Install the upper radiator hose (A) and lower radiator hose (B).

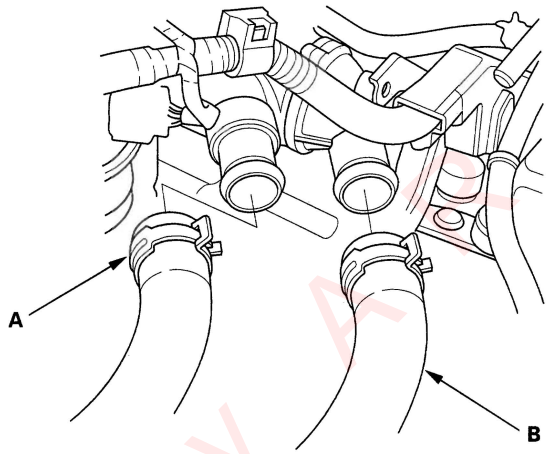

18. Install the power steering (P/S) pump (A) and P/S hose bracket (B).

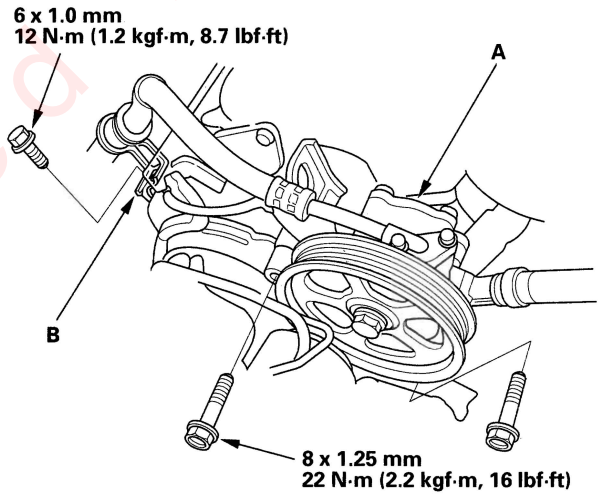

Protected by AP

19. Install the timing belt (see page 6-16).
20. Adjust the valve clearance (see page 6-8).
21. Install the cylinder head covers (see page 6-28).
22. Install the intake manifold (see page 9-4).
23. Install the alternator (see page 4-32).
24. Install the drive belt (see page 4-29).
25. Clean the battery posts and cable terminals with sandpaper. Assemble them and apply grease to prevent corrosion.
26. After installation, check that all tubes, hoses and connectors are installed correctly.
27. Inspect for fuel leaks. Turn the ignition switch ON (II) (do not operate the starter) so the fuel pump runs for about 2 seconds and pressurizes the fuel line. Repeat this operation two or three times, then check for fuel leakage at any point in the fuel line.
28. Refill the radiator with engine coolant, and bleed air from the cooling system with the heater valve open (see step 8 on page 10-7).
29. Inspect the idle speed (see page 11-238).
30. Inspect the ignition timing (see page 4-18).
31. Enter the anti-theft codes for the radio and the navigation system, then enter the customer's XM radio channel presets.
32. Set the clock.

Sealing Bolt Installation

NOTE: When installing the sealing bolt, always use new washer.

FRONT:

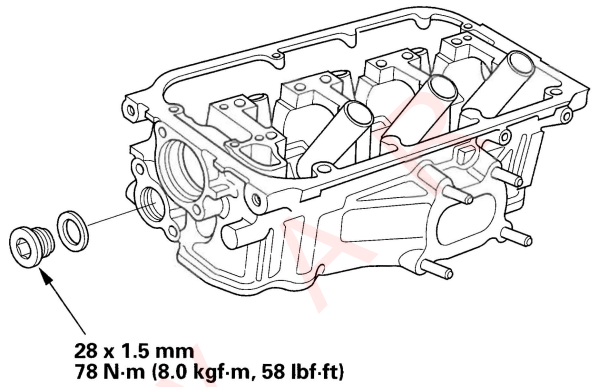

REAR:

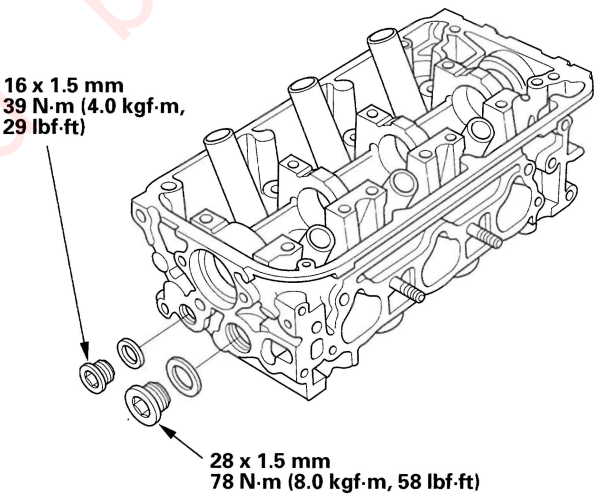

Protected by A

Engine Mechanical



Engine Block

Special Tools 7-2
Component Location Index 7-3
Connecting Rod and Crankshaft End Play Inspection 7-6
Crankshaft Main Bearing Replacement 7-7
Connecting Rod Bearing Replacement 7-9
Oil Pan Removal 7-11
Crankshaft and Piston Removal 7-12
Crankshaft Inspection 7-14
Block and Piston Inspection 7-15
Cylinder Bore Honing 7-17
Piston, Pin, and Connecting Rod Replacement 7-18
Piston Ring Replacement 7-21
Crankshaft and Piston Installation 7-23
Oil Pan Installation 7-28
Pulley End Crankshaft Oil Seal Installation - In Car ... 7-29
Transmission End Crankshaft Oil Seal Installation - In Car 7-29
Drain Bolt Installation 7-30

Protected by AR

Special Tools

Ref. No.	Tool Number	Description	Qty
①	070AD-RCA0100	Oil Seal Driver, 64 mm	1
②	070AD-RCA0200	Driver Attachment, 106 mm	1
③	07749-0010000	Driver	1

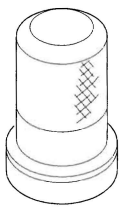

①

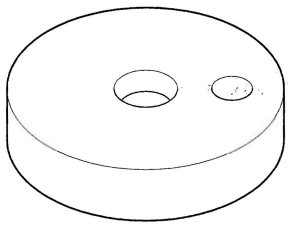

②

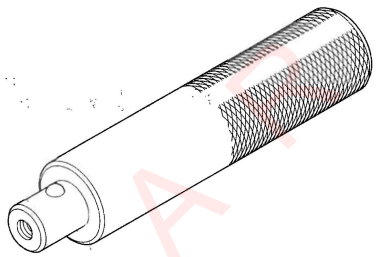

③

Protected by AP

Component Location Index

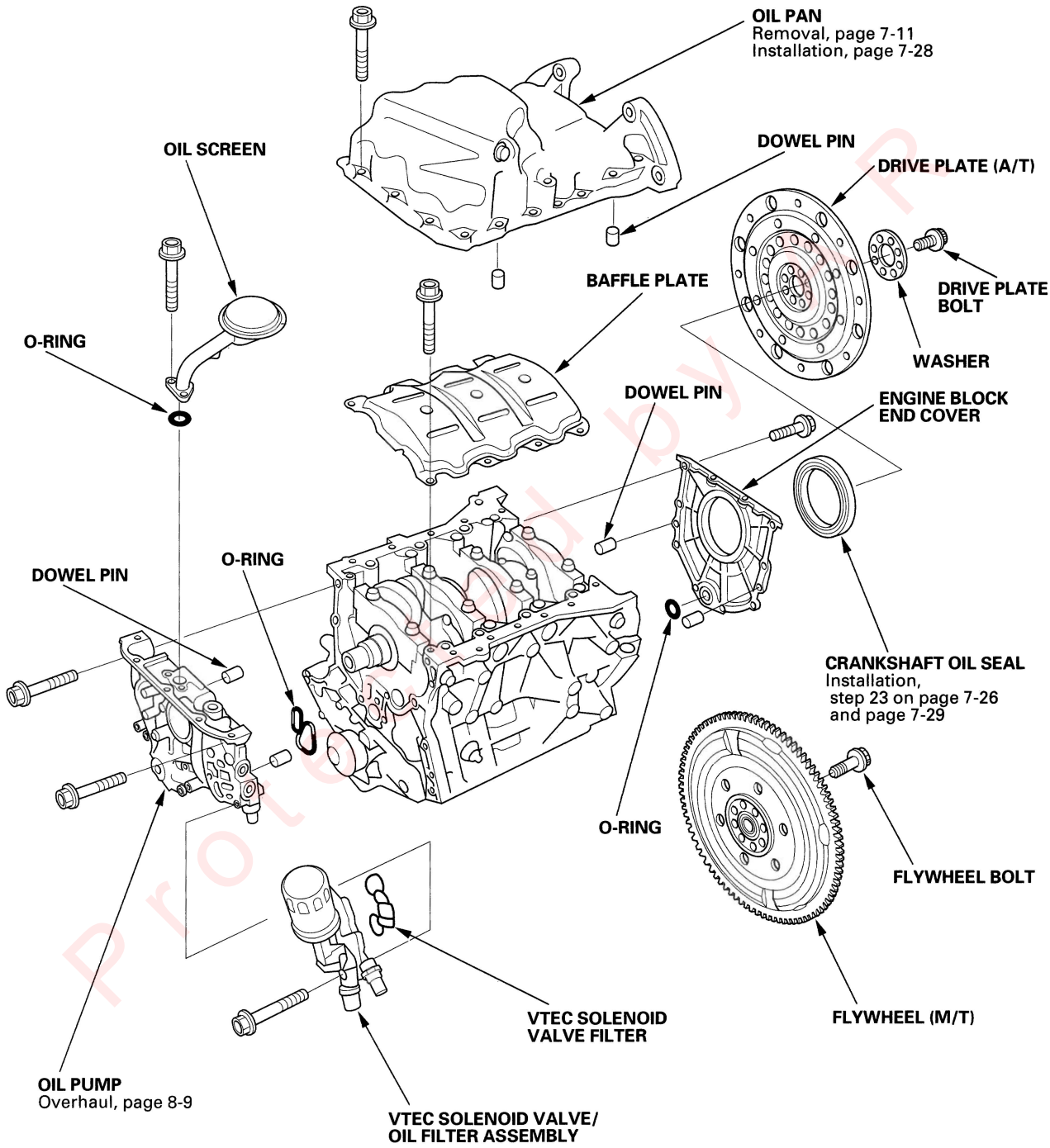

(cont'd)

Component Location Index (cont'd)

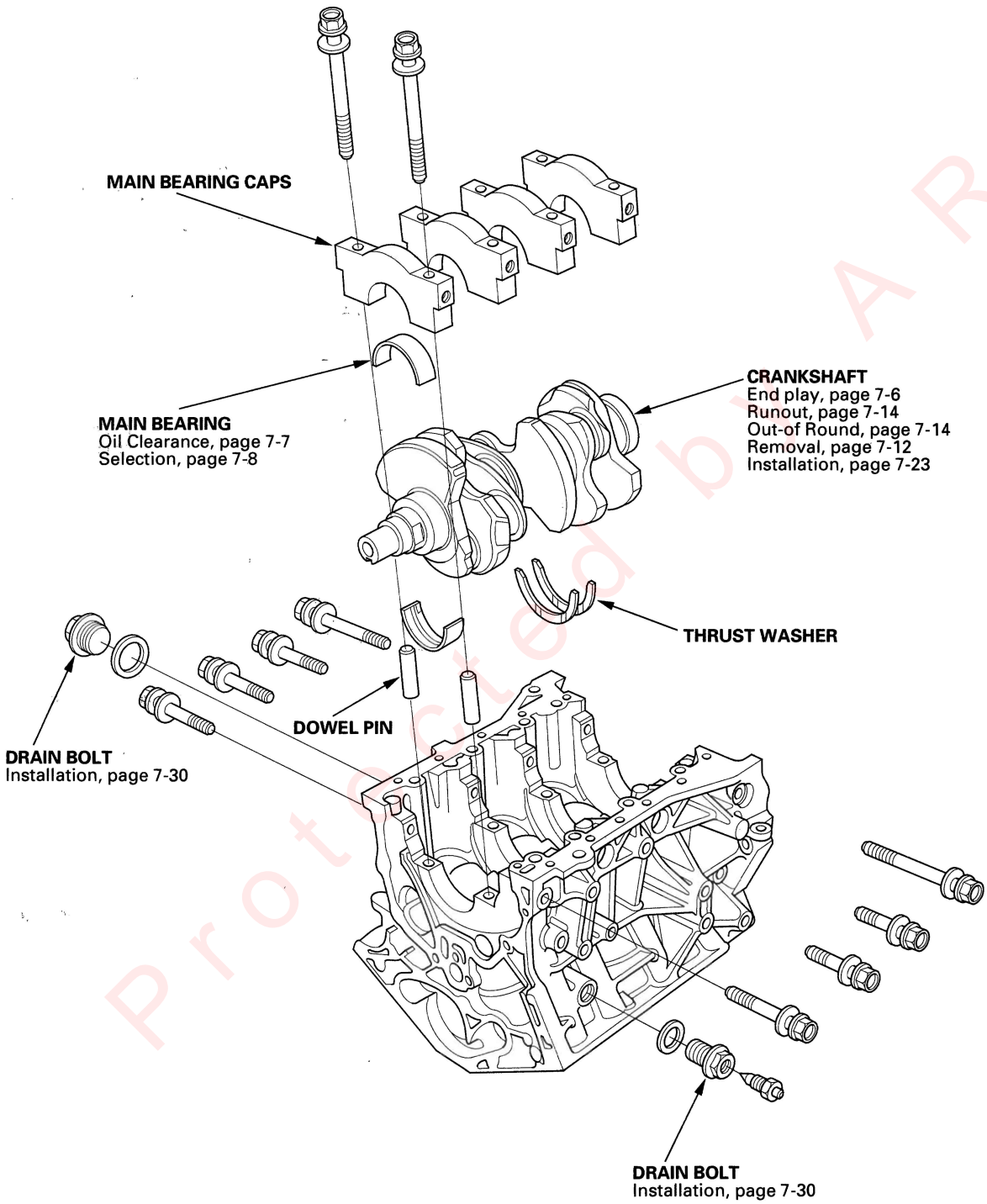

Protected by AR

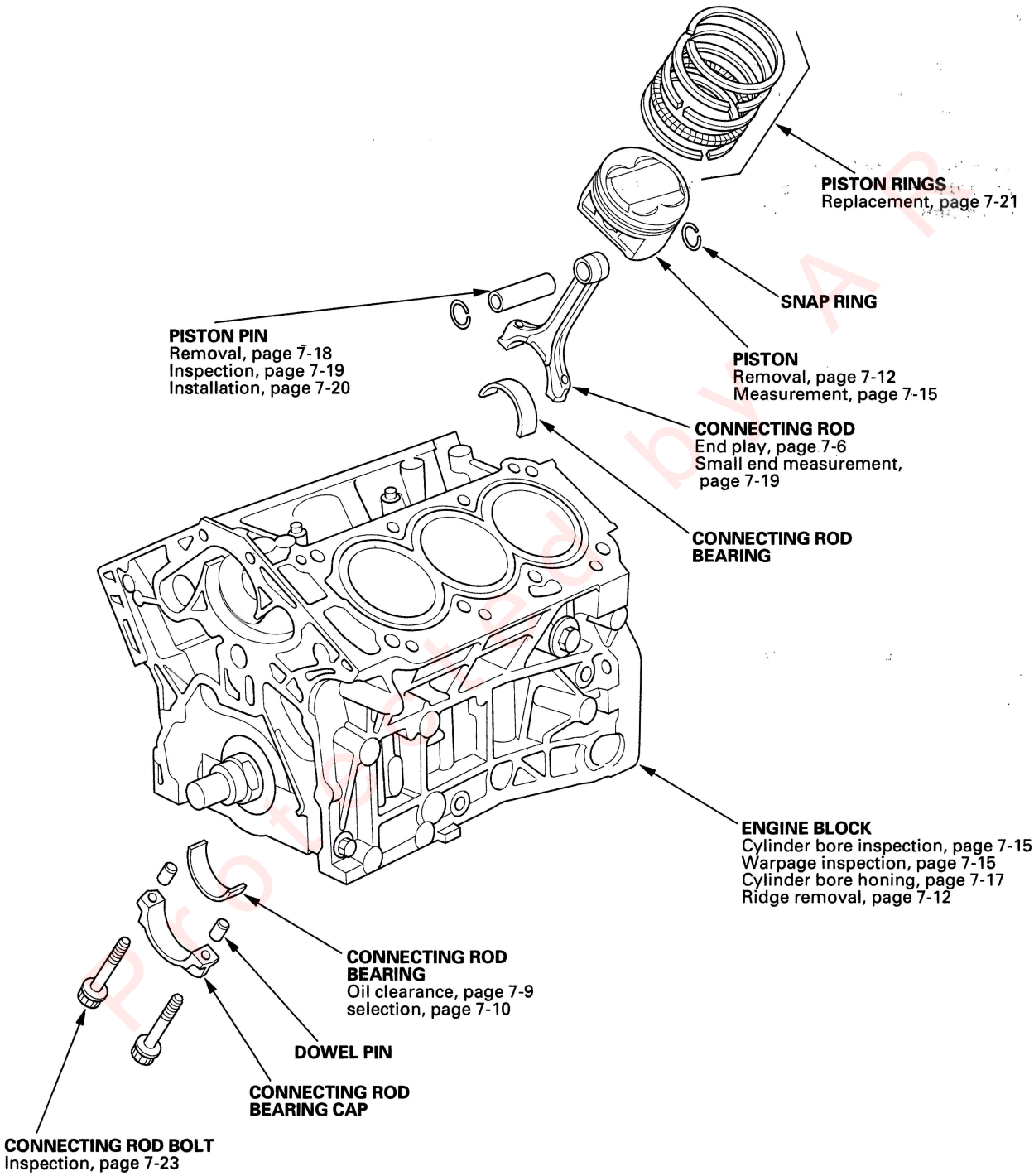
PISTON RINGS
Replacement, page 7-21
SNAP RING
PISTON
Removal, page 7-12
Measurement, page 7-15
PISTON PIN
Removal, page 7-18
Inspection, page 7-19
Installation, page 7-20
CONNECTING ROD
End play, page 7-6
Small end measurement, page 7-19
CONNECTING ROD BEARING
ENGINE BLOCK
Cylinder bore inspection, page 7-15
Warpage inspection, page 7-15
Cylinder bore honing, page 7-17
Ridge removal, page 7-12
CONNECTING ROD BEARING
Oil clearance, page 7-9
selection, page 7-10
DOWEL PIN
CONNECTING ROD BEARING CAP
CONNECTING ROD BOLT
Inspection, page 7-23

Connecting Rod and Crankshaft End Play Inspection

1. Remove the oil pump (see page 8-10).
2. Remove the baffle plate (see step 9 on page 7-12).
3. Measure the connecting rod end play with a feeler gauge (A) between the connecting rod (B) and crankshaft (C).

Connecting Rod End Play
Standard (New): 0.15—0.35 mm (0.006—0.014 in.)
Service Limit: 0.45 mm (0.018 in.)

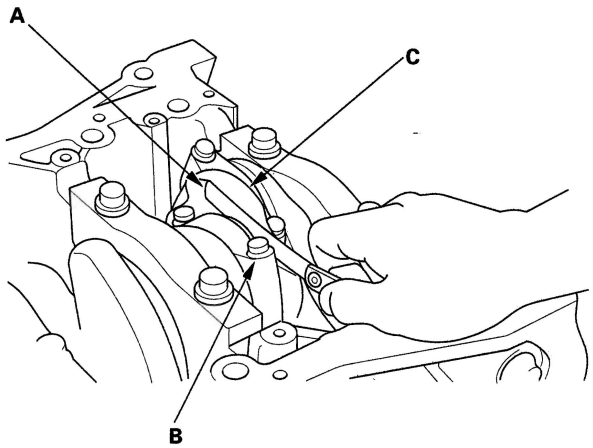

4. If the connecting rod end play is out-of-tolerance, install a new connecting rod and recheck. If it is still out-of-tolerance, replace the crankshaft (see page 7-12).
5. Push the crankshaft firmly away from the dial indicator, and zero the dial against the end of the crankshaft. Then pull the crankshaft firmly back toward the indicator; the dial reading should not exceed the service limit.

Crankshaft End Play
Standard (New): 0.10—0.35 mm (0.004—0.014 in.)
Service Limit: 0.45 mm (0.018 in.)

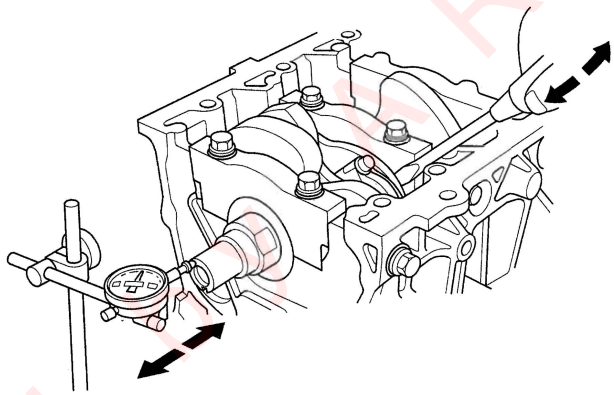

6. If the end play is excessive, replace the thrust washers and recheck. If it is still out-of-tolerance, replace the crankshaft (see page 7-12).

Protected by MR

Crankshaft Main Bearing Replacement

Main Bearing Clearance Inspection

1. Remove the main caps and bearing halves (see page 7-12).

2. Clean each main journal and bearing half with a clean shop towel.

3. Place one strip of plastigage across each main journal.

   NOTE: If the engine is still in the vehicle when you bolt the main cap down to check the clearance, the weight of the crankshaft and drive plate will flatten the plastigage further than just the torque on the cap bolt, and give you an incorrect reading. For an accurate reading, support the crank with a jack under the counterweights, and check only one bearing at a time.

4. Reinstall the bearings and caps, then torque the bearing cap bolts to 74 N·m (7.5 kgf·m, 54 lbf·ft), and the bearing cap side bolts to 49 N·m (5.0 kgf·m, 36 lbf·ft) in the proper sequence (see step 21 on page 7-25).

   NOTE: Do not rotate the crankshaft during inspection.

5. Remove the cap and bearing half, and measure the widest part of the plastigage.

   Main Bearing-to-Journal Oil Clearance
   Standard (New): 0.020—0.044 mm (0.0008—0.0017 in.)
   Service Limit: 0.050 mm (0.0020 in.)

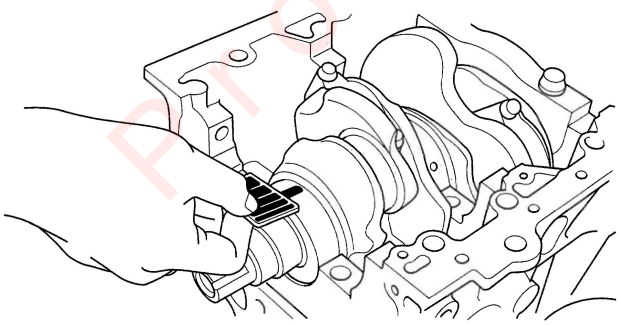

6. If the plastigage measures too wide or too narrow, remove the crankshaft, and remove the upper half of the bearing. Install a new, complete bearing with the same color code, and recheck the clearance. Do not file, shim, or scrape the bearings or the caps to adjust clearance.

7. If the plastigage shows the clearance is still incorrect, try the next larger or smaller bearing (the color listed above or below that one), and check again. If the proper clearance cannot be obtained by using the appropriate larger or smaller bearings, replace the crankshaft and start over.

(cont'd)

Protected by Ar

Crankshaft Main Bearing Replacement (cont'd)

Main Bearing Selection

Crankshaft Bore Code Location
Letters or bars have been stamped on the end of the block as a code for the size of each of the four main journal bores.

Use them, and the numbers stamped on the crankshaft (codes for main journal size), to choose the correct bearings. If the codes are indecipherable because of an accumulation of dirt and dust, do not scrub them with a wire brush or scraper. Clean them only with solvent or detergent.

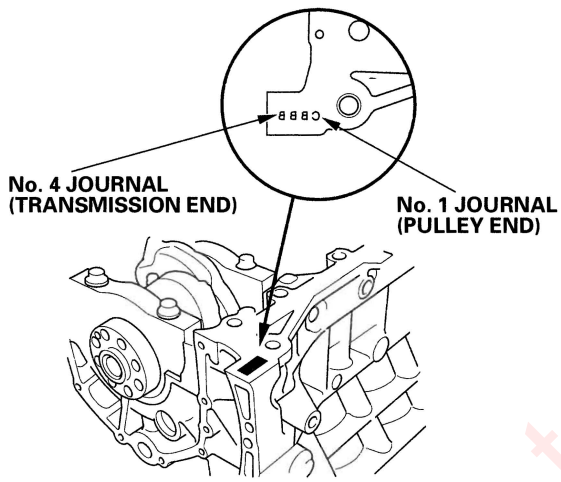

Bearing Identification

Color code is on the edge of the bearing

→ Larger crank bore

A or I	B or II	C or III	D or IIII
Red/ Pink	Pink	Pink/ Yellow	Yellow
Pink	Pink/ Yellow	Yellow	Yellow/ Green
Pink/ Yellow	Yellow	Yellow/ Green	Green
Yellow	Yellow/ Green	Green	Green/ Brown
Yellow/ Green	Green	Green/ Brown	Brown
Green	Green/ Brown	Brown	Brown/ Black

→ Smaller bearing (Thicker)

Smaller main Journal
1 or I
2 or II
3 or III
4 or IIII
5 or IIIII
6 or IIIIII

Smaller bearing (Thicker)

NOTE: When using bearing halves of different colors, it does not matter which color is used in the top or bottom.

Main Journal Code Locations (Numbers or Bars)

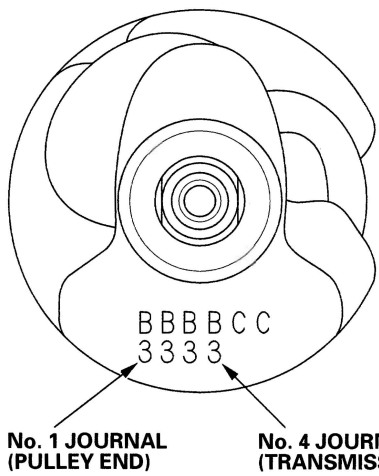

Protected by A.P.

Connecting Rod Bearing Replacement

Rod Bearing Clearance Inspection

1. Remove the connecting rod cap and bearing half (see page 7-12).
2. Clean the crankshaft rod journal and bearing half with a clean shop towel.
3. Place a strip of plastigage across the rod journal.
4. Reinstall the bearing half and cap, and torque the bolts.

   NOTE: Apply new engine oil to the bolt threads.

   Tightening torque:
   20 N·m (2.0 kgf·m, 14 lbf·ft) + 90°

   NOTE: Do not rotate the crankshaft during inspection.

5. Remove the rod cap and bearing half and measure the widest part of the plastigage.

   Connecting Rod Bearing-to-Journal Oil Clearance
   Standard (New): 0.020 – 0.044 mm
   (0.0008 – 0.0017 in.)
   Service Limit: 0.050 mm (0.0020 in.)

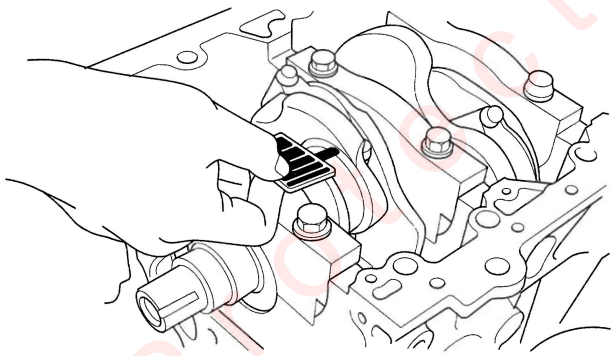

6. If the plastigage measures too wide or too narrow, remove the upper half of the bearing, then install a new, complete bearing with the same color code, and recheck the clearance. Do not file, shim, or scrape the bearings or the caps to adjust clearance.
7. If the plastigage shows the clearance is still incorrect, try the next larger or smaller bearing (the color listed above or below that one), and check clearance again. If the proper clearance cannot be obtained by using the appropriate larger or smaller bearings, replace the crankshaft and start over.

(cont'd)

Protected by A

Connecting Rod Bearing Replacement (cont'd)

Rod Bearing Selection

Each rod falls into one of four tolerance ranges (from 0 to 0.024 mm (0.0009 in.), in 0.006 mm (0.0002 in.) increments) depending on the size of its big end bore. It's then stamped with a number or bar (1, 2, 3, or 4/I, II, III, or IIII) indicating the range. You may find any combination of 1, 2, 3, or 4/I, II, III, or IIII in any engine.

Normal Bore Size: 58.0 mm (2.28 in.)

Inspect the connecting rod for cracks and heat damage.

Connecting Rod Journal Code Locations
Numbers or bars have been stamped on the side of each connecting rod as a code for the size of the big end. Use them, and the letters or bars stamped on the crank (codes for rod journal size), to choose the correct bearings. If the codes are indecipherable because of an accumulation of dirt and dust, do not scrub them with a wire brush or scraper. Clean them only with solvent or detergent.

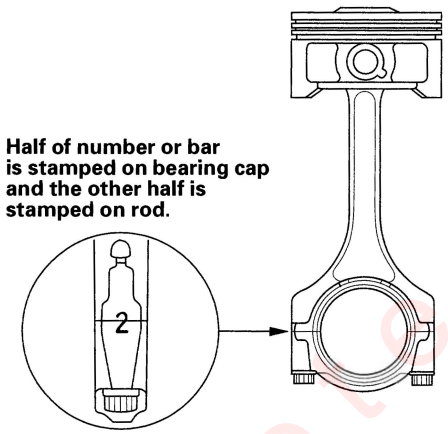

Bearing Identification

Color code is on the edge of the bearing

	Larger big end bore →			
	1 or I	2 or II	3 or III	4 or IIII
Smaller bearing (Thicker) ↓				
A or I	Pink	Pink/ Yellow	Yellow	Yellow/ Green
B or II	Pink/ Yellow	Yellow	Yellow/ Green	Green
C or III	Yellow	Yellow/ Green	Green	Green/ Brown
D or IIII	Yellow/ Green	Green	Green/ Brown	Brown
E or IIIII	Green	Green/ Brown	Brown	Brown/ Black
F or IIIIII	Green/ Brown	Brown	Brown/ Black	Black

Smaller rod Journal

Smaller bearing (Thicker)

NOTE: When using bearing halves of different colors, it does not matter which color is used in the top or bottom.

Connecting Rod Journal Code Locations (Letters or Bars)

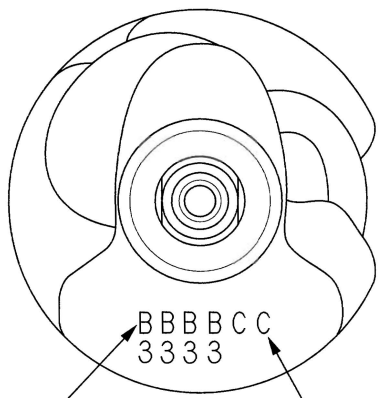

Protected by ARP

Oil Pan Removal

If the engine is out of the vehicle, go to step 7.

1. Raise the vehicle on the hoist to full height.
2. Drain the engine oil (see page 8-6).
3. Remove the splash shield (see step 33 on page 5-6).
4. Remove the under cover.

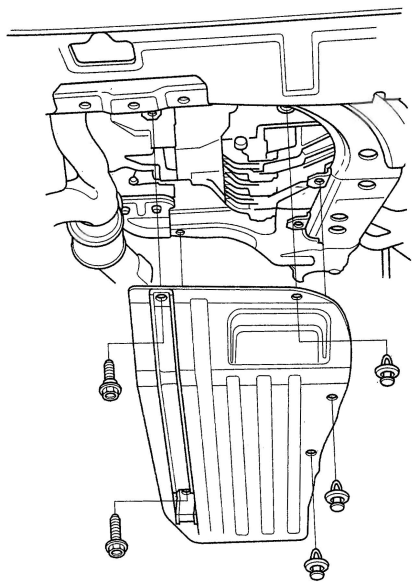

5. Remove exhaust pipe A (see step 43 on page 5-7).
6. Remove the torque converter cover (A) and the two bolts (B) securing the transmission.

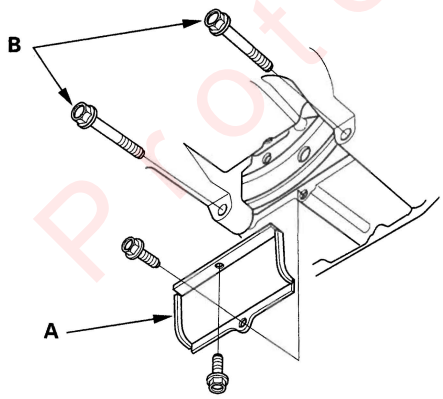

7. Remove the bolts securing the oil pan.
8. Using a flat blade screwdriver, separate the oil pan from the block in the places shown.

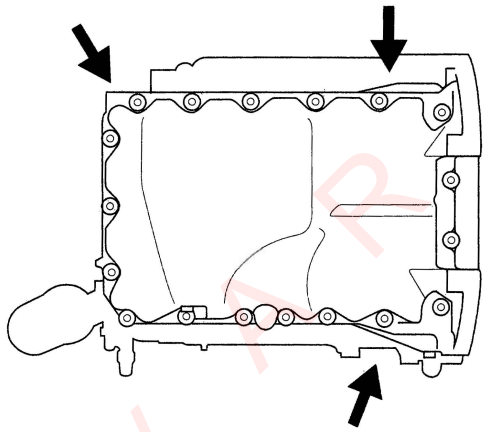

9. Remove the oil pan.

Protected by AR

Crankshaft and Piston Removal

1. Remove the engine assembly (see page 5-2).
2. Remove the transmission:
   - Manual transmission (see page 13-13).
   - Automatic transmission (see page 14-205).
3. Remove the cylinder heads (see page 6-29).
4. Remove the crankshaft position (CKP) sensor (see page 11-168).
5. Remove the timing belt drive pulley from the crankshaft.
6. Remove the oil pan (see page 7-11).
7. Remove the engine block end cover.

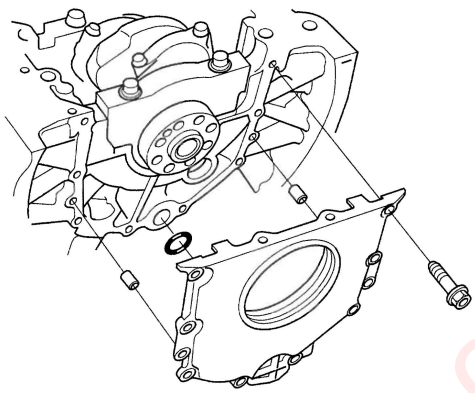

8. Remove the VTEC solenoid valve/oil filter assembly.

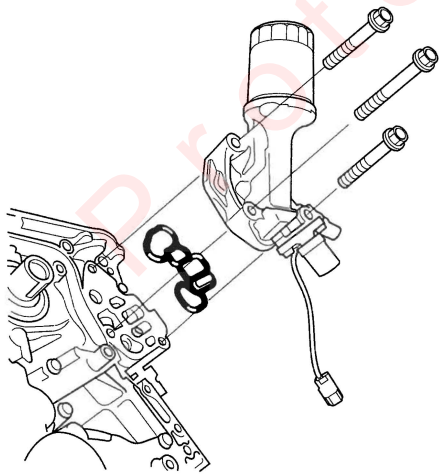

9. Remove the oil screen (A), baffle plate (B), and oil pump (C).

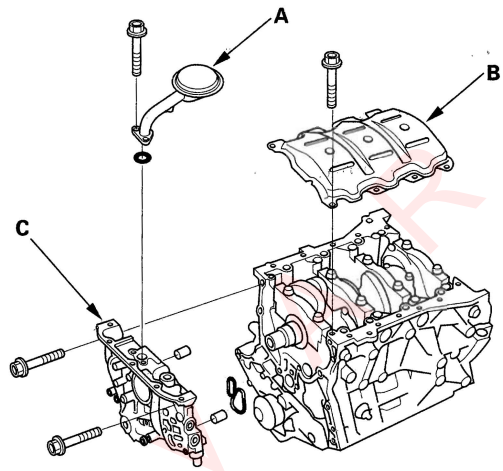

10. If you can feel a ridge of metal or hard carbon around the top of any cylinder, remove it with a ridge reamer (A). Follow the reamer manufacturer's instructions. If the ridge is not removed, it may damage the piston as it's pushed out.

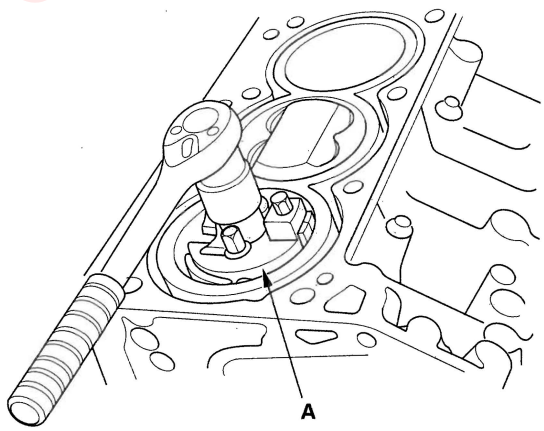

Protected by

11. Remove the bearing from the cap. Keep all caps/bearings in order.

12. Remove the upper bearing halves from the connecting rods, and set them aside with their respective caps.

13. Remove the connecting rod caps after setting the crank pin at bottom dead center (BDC) for each cylinder. Remove the piston assembly by pushing on the connecting rod. Take care not to damage the crank pin or cylinder with the connecting rod.

CORRECT

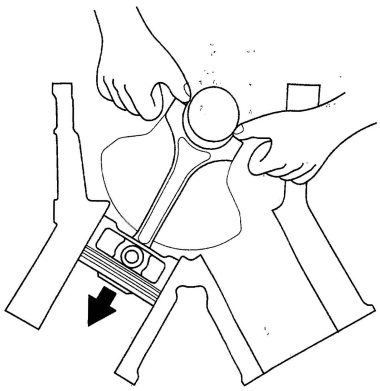

INCORRECT

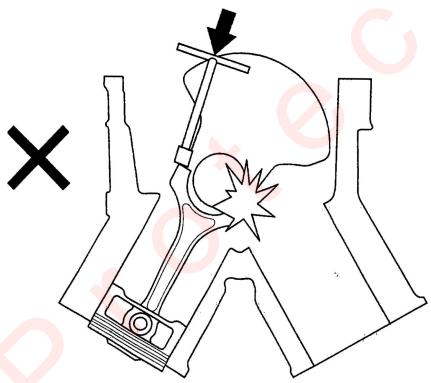

14. To avoid confusion during reassembly, mark each piston/connecting rod assembly with its cylinder number.

15. Unscrew the bearing cap bolts and bearing cap side bolts in sequence 1/3 turn at a time; repeat the sequence until all bolts are loosened.

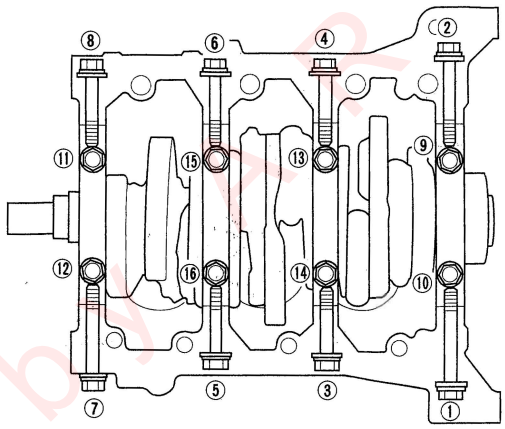

Protected by AP

(cont'd)

Crankshaft and Piston Removal (cont'd)

16. Remove the bearing cap bolts (A) and bearing cap side bolts (B), then remove the bearing cap (C).

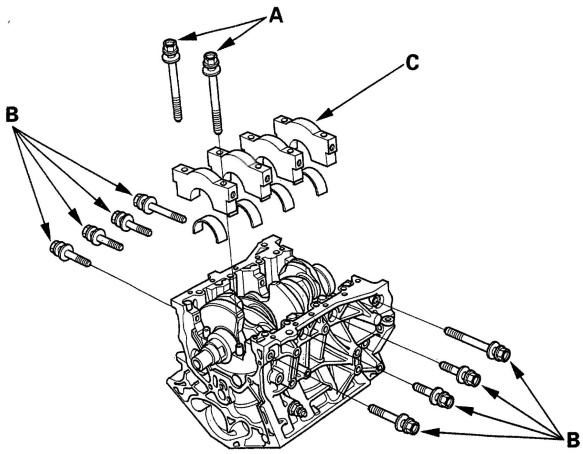

17. Lift the crankshaft (A) out of the engine block, being careful not to damage the journals.

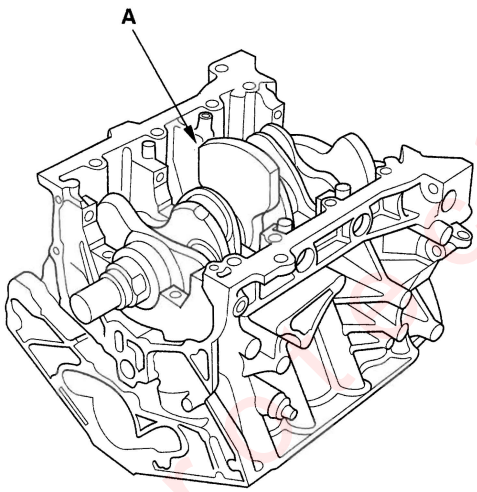

18. Reinstall the main caps and bearings on the engine block in the proper order.

Crankshaft Inspection

Out-of-Round and Taper

1. Remove the crankshaft from the engine block (see page 7-12).
2. Clean the crankshaft oil passages with pipe cleaners or a suitable brush.
3. Check the keyway and threads.
4. Measure out-of-round at the middle of each rod and main journal in two places. The difference between measurements on each journal must not be more than the service limit.

Journal Out-of-Round
Standard (New): 0.005 mm (0.0002 in.) max.
Service Limit: 0.010 mm (0.0004 in.)

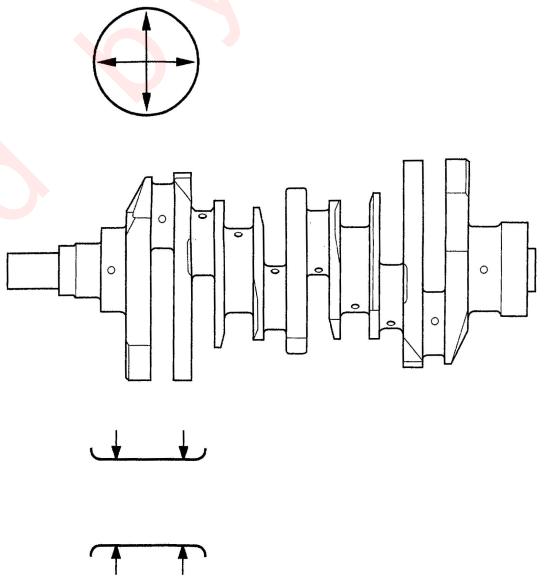

5. Measure taper at the edges of each rod and main journal. The difference between measurements on each journal must not be more than the service limit.

Journal Taper
Standard (New): 0.005 mm (0.0002 in.) max.
Service Limit: 0.010 mm (0.0004 in.)

Protected by AR

Block and Piston Inspection

Straightness

6. Place the engine block on the surface plate.
7. Clean and install the bearings on the No. 1 and No. 4 journal of the engine block.
8. Lower the crankshaft into the block.
9. Measure the runout on all of the main journals. Rotate the crankshaft two complete revolutions. The difference between measurements on each journal must not be more than the service limit.

Crankshaft Total Runout
Standard (New): 0.025 mm (0.0010 in.) max.
Service Limit: 0.030 mm (0.0012 in.)

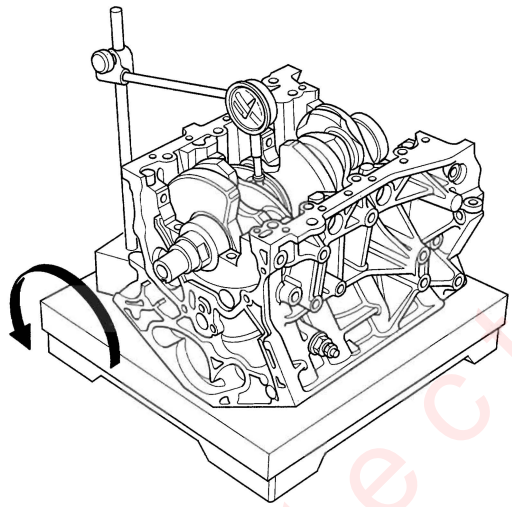

1. Remove the piston from the engine block (see page 7-12).
2. Check the piston for distortion or cracks.
3. Measure the piston diameter at a point 16.0 mm (0.63 in.) from the bottom of the skirt.

Piston Diameter
Standard (New): 88.975–88.985 mm (3.5029–3.5033 in.)
Service Limit: 88.965 mm (3.5026 in.)

Oversize Piston Diameter
0.25: 89.225–89.235 mm (3.5128–3.5132 in.)

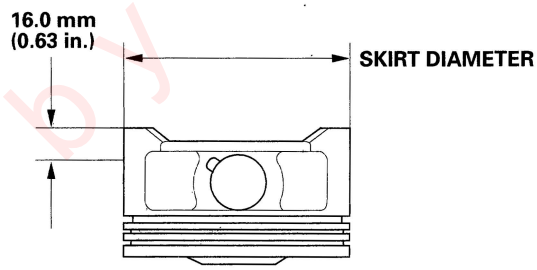

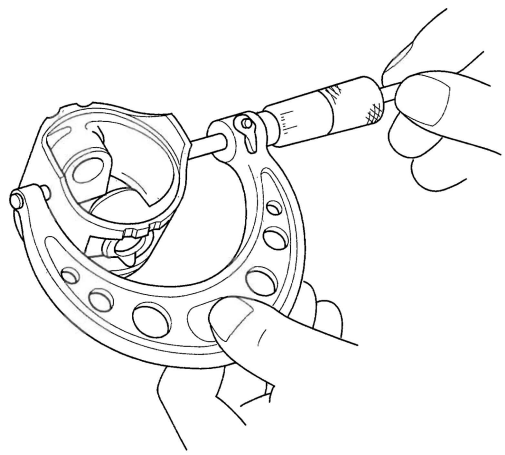

(cont'd)

Protected by ARP

Block and Piston Inspection (cont'd)

4. Measure wear and taper in direction X and Y at three levels in each cylinder as shown. If measurements in any cylinder are beyond the oversize bore service limit, replace the block. If the block has to be rebored, refer to step 7 after reboring.

Cylinder Bore Size
Standard (New): 89.000–89.015 mm (3.5039–3.5045 in.)
Service Limit: 89.065 mm (3.5065 in.)
Oversize
0.25: 89.250–89.265 mm (3.5138–3.5144 in.)
Reboring Limit: 0.25 mm (0.01 in.)
Bore Taper
Limit: (Difference between first and third measurement) 0.05 mm (0.002 in.)

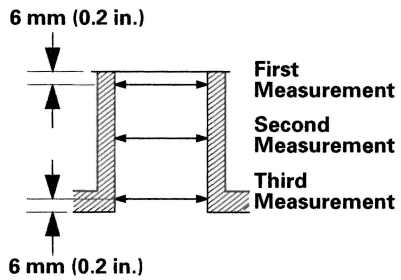

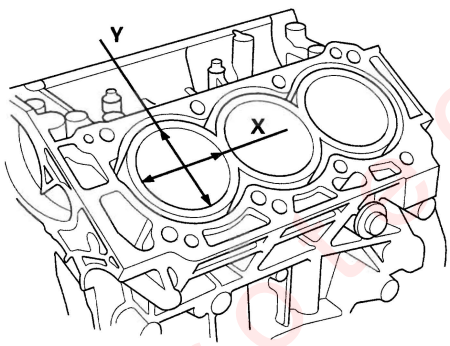

5. Scored or scratched cylinder bores must be honed (see page 7-17).

6. Check the top of the engine block for warpage. Measure along the edges and across the center as shown.

Engine Block Warpage
Standard (New): 0.07 mm (0.003 in.) max.
Service Limit: 0.10 mm (0.004 in.)

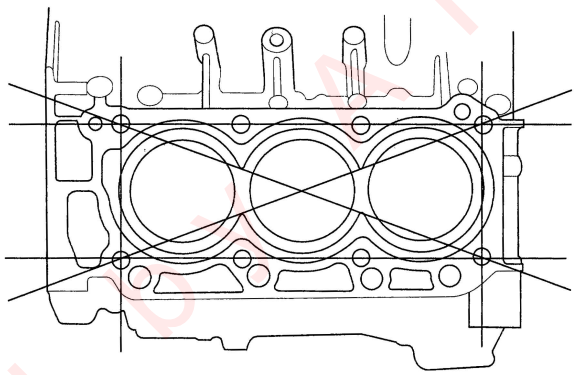

PRECISION STRAIGHT EDGE

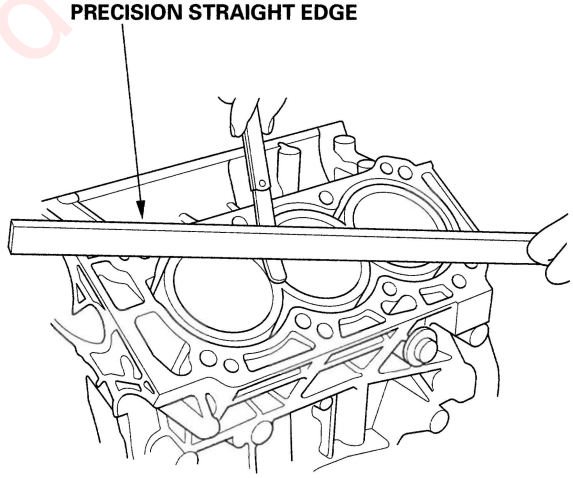

Protected by

7. Calculate the difference between cylinder bore diameter and piston diameter. If the clearance is near or exceeds the service limit, inspect the piston and engine block for excessive wear.

Piston-to-Block Clearance
Standard (New): 0.015—0.040 mm (0.0006—0.0016 in.)
Service Limit: 0.08 mm (0.003 in.)

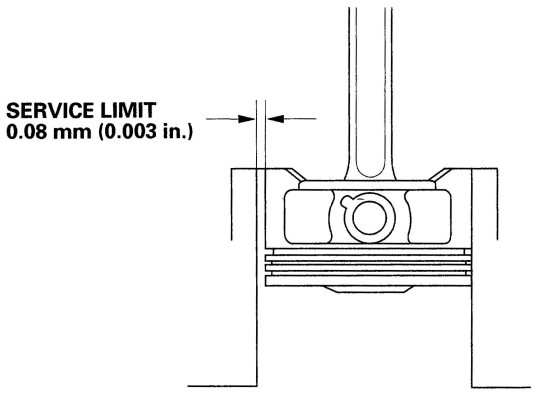

Cylinder Bore Honing

1. Measure the cylinder bores (see step 4 on page 7-16). If the engine block is to be reused, hone the cylinders and remeasure the bores. Only scored or scratched cylinder bores must be honed.

2. Hone the cylinder bores with honing oil and a fine (400 grit) stone in a 60 degree crosshatch pattern.

   NOTE:
   - Use only a rigid hone with 400 grit or finer stone, such as Sunnen, Ammco, or equivalent.
   - Do not use stones that are worn or broken.

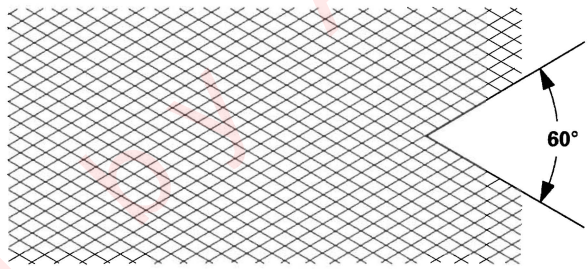

3. When honing is complete, thoroughly clean the engine block of all metal particles. Wash the cylinder bores with hot soapy water, then dry and oil them immediately to prevent rusting. Never use solvent, it will only redistribute the grit on the cylinder walls.

4. If scoring or scratches are still present in the cylinder bores after honing to the service limit, rebore the engine block. Some light vertical scoring and scratching is acceptable if it is not deep enough to catch your fingernail and does not run the full length of the bore.

Protected by CARiA

Piston, Pin, and Connecting Rod Replacement

Disassembly

1. Remove the piston from the engine block (see page 7-12).

2. Apply new engine oil to the piston pin snap rings (A) and turn them in the ring grooves until the end gaps are lined up with the cutouts in the piston pin bores (B).

   NOTE: Take care not to damage the ring grooves.

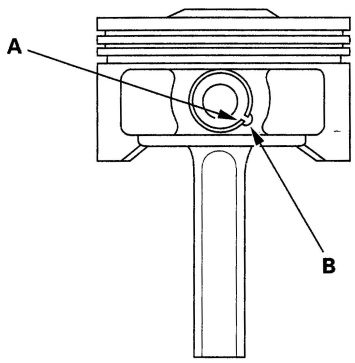

3. Remove snap rings (A) from both sides of the piston. Start at the cutout in the piston pin bore. Remove the snap rings carefully so they do not go flying or get lost. Wear eye protection.

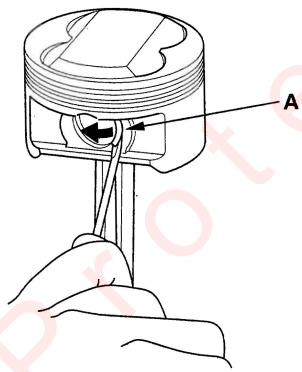

4. Heat the piston and connecting rod assembly to about 158°F (70°C), then remove the piston pin.

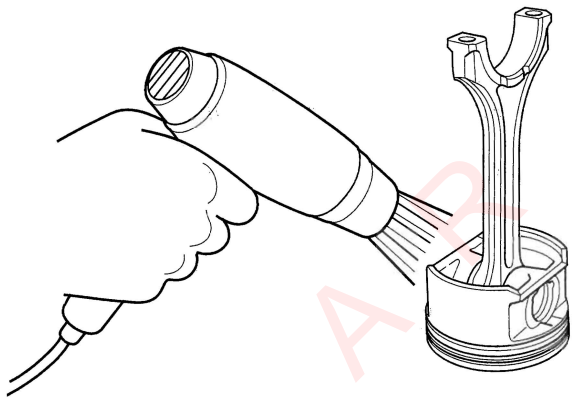

Protected by AP

Inspection

NOTE: Inspect the piston, piston pin, and connecting rod when they are at room temperature.

1. Measure the diameter of the piston pin.

Piston Pin Diameter
Standard (New): 21.962—21.965 mm (0.8646—0.8648 in.)
Service Limit: 21.954 mm (0.8643 in.)

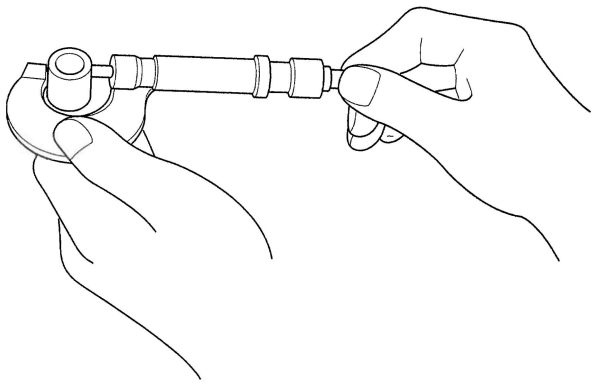

2. Zero the dial indicator to the piston pin diameter.

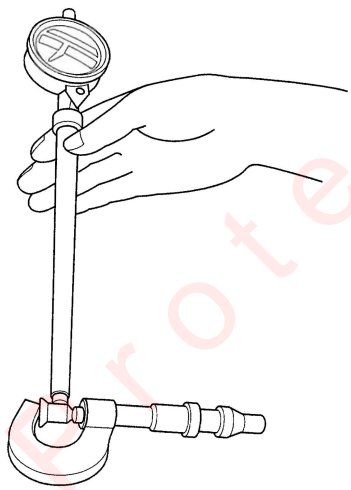

3. Check the difference between the piston pin diameter and piston pin hole diameter on the piston.

Piston Pin-to-Piston Clearance
Standard (New): —0.0050 to +0.0010 mm (—0.00020 to +0.00004 in.)
Service Limit: 0.004 mm (0.0002 in.)

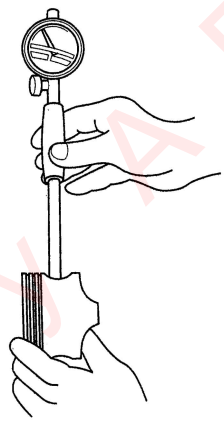

4. Measure the piston pin-to-connecting rod clearance.

Piston Pin-to-Connecting Rod Clearance
Standard (New): 0.005—0.014 mm (0.0002—0.0006 in.)
Service Limit: 0.019 mm (0.0007 in.)

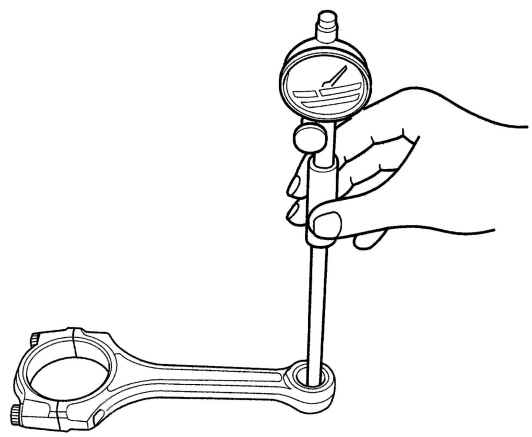

(cont'd)

Protected by AR

Piston, Pin, and Connecting Rod Replacement (cont'd)

Reassembly

1. Install a piston pin snap ring (A).



2. Coat the piston pin bore in the piston, the bore in the connecting rod, and the piston pin with new engine oil.

3. Heat the piston to about 158°F (70°C).

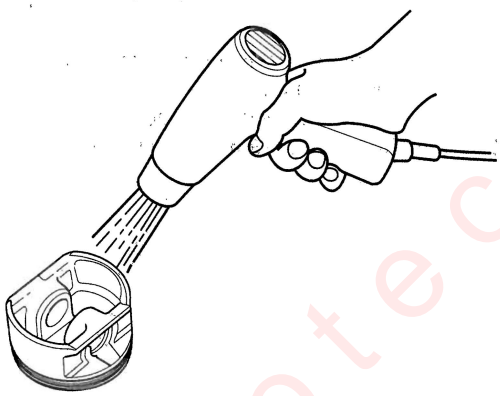

4. Assemble the piston (A) and connecting rod (B) with the embossed marks (C) on the same side. Install the piston pin (D).

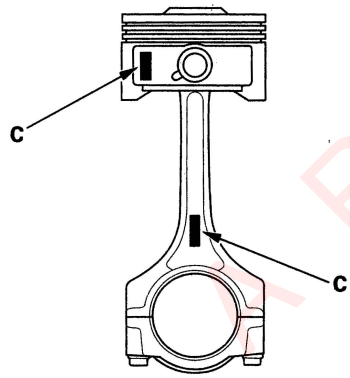

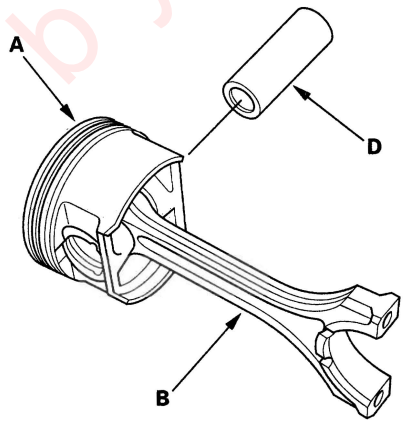

5. Install the remaining snap ring.

Protected by KR

Piston Ring Replacement

1. Remove the piston from the engine block (see page 7-12).

2. Using a ring expander (A), remove the old piston rings (B).

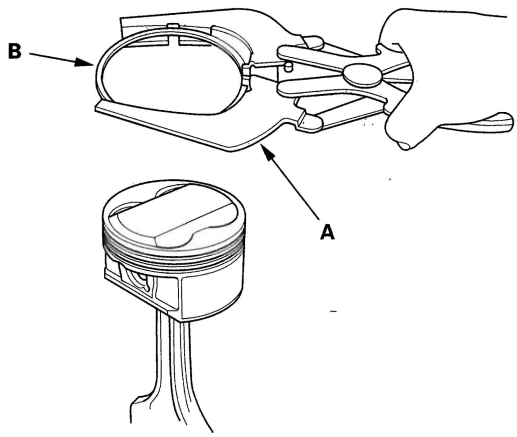

3. Clean all the ring grooves thoroughly with a squared-off broken ring, or a ring groove cleaner with a blade to fit the piston grooves. File down the blade, if necessary. The top ring and second ring grooves are 1.2 mm (0.05 in.) wide, and the oil ring groove is 2.8 mm (0.11 in.) wide. Do not use a wire brush to clean the ring grooves, or cut the ring grooves deeper with the cleaning tool.

   NOTE: If the piston is to be separated from the connecting rod, do not install new rings yet.

4. Using a piston, push a new ring (A) into the cylinder bore 15—20 mm (0.6—0.8 in.) from the bottom.

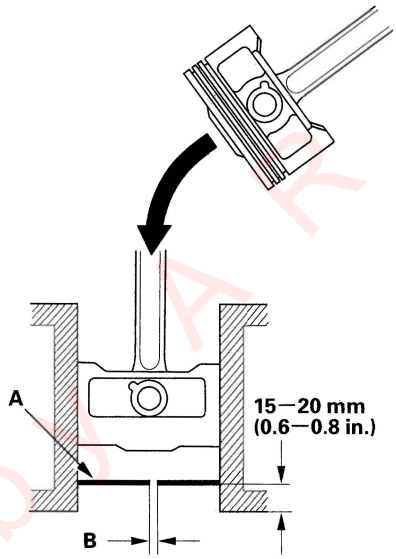

5. Measure the piston ring end-gap (B) with a feeler gauge:

   - If the gap is too small, check to see if you have the proper rings for your engine.
   - If the gap is too large, recheck the cylinder bore diameter against the wear limits (see step 4 on page 7-16). If the bore is over the service limit, the engine block must be rebored.

Piston Ring End-Gap

Top Ring
Standard (New): 0.20—0.35 mm (0.008—0.014 in.)
Service Limit: 0.60 mm (0.024 in.)

Second Ring
Standard (New): 0.40—0.55 mm (0.016—0.022 in.)
Service Limit: 0.70 mm (0.028 in.)

Oil Ring
Standard (New): 0.20—0.70 mm (0.008—0.028 in.)
Service Limit: 0.80 mm (0.031 in.)

(cont'd)

Protected by A R

Piston Ring Replacement (cont'd)

6. Install the rings as shown. The top ring (A) has a 1D mark and the second ring (B) has a 2C mark. The manufacturing marks (C) must be facing upward.

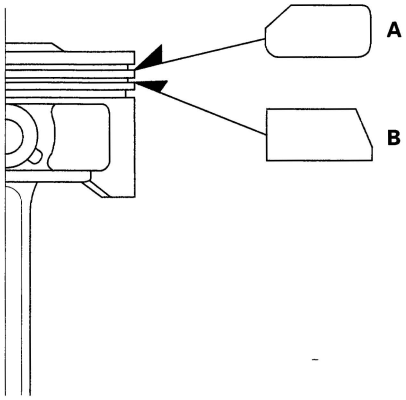

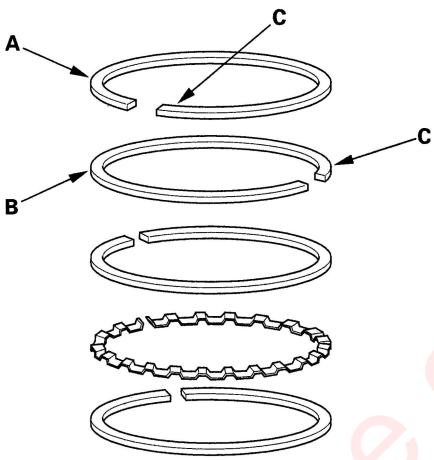

Piston Ring Dimensions:

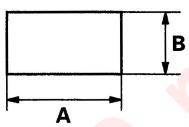

Top Ring (Standard)
A: 3.1 mm (0.12 in.)
B: 1.2 mm (0.05 in.)

Second Ring (Standard)
A: 3.4 mm (0.13 in.)
B: 1.2 mm (0.05 in.)

7. After installing a new set of rings, measure the ring-to-groove clearance:

Top Ring Clearance
Standard (New): 0.055–0.080 mm (0.0022–0.0031 in.)
Service Limit: 0.15 mm (0.006 in.)

Second Ring Clearance
Standard (New): 0.030–0.055 mm (0.0012–0.0022 in.)
Service Limit: 0.13 mm (0.005 in.)

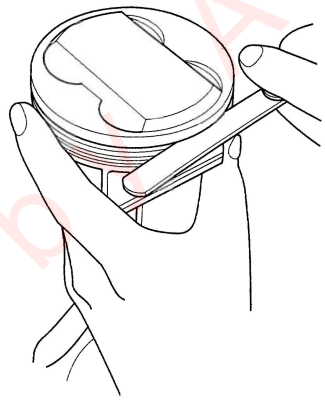

8. Rotate the rings in their grooves to make sure they do not bind.

9. Position the ring end gaps as shown:

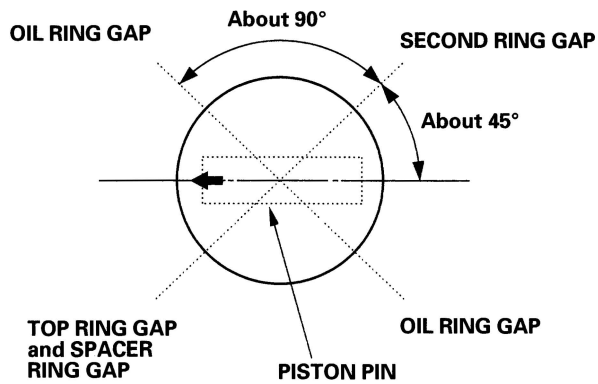

Protected by AR

Crankshaft and Piston Installation

Special Tools Required
- Driver 07749-0010000
- Driver attachment, 106 mm 070AD-RCA0200

1. Measure the diameter of each connecting rod bolt at point A and point B.

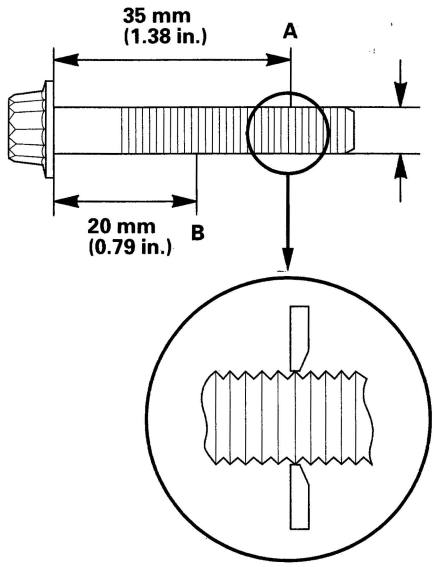

2. Calculate the difference in diameter between point A and point B.

   Point A − Point B = Difference in Diameter

   Difference in Diameter
   Specification: 0 − 0.1 mm (0 − 0.004 in.)

3. If the difference in diameter is out of tolerance, replace the connecting rod bolt.

4. Check the connecting rod bearing clearance with plastigage (see page 7-9).

5. Check the main bearing clearance with plastigage (see page 7-7).

6. Install the bearing halves in the engine block and connecting rods.

7. Apply new engine oil to all the main bearing and rod bearing journals.

8. Lower the crankshaft (A) into the block.

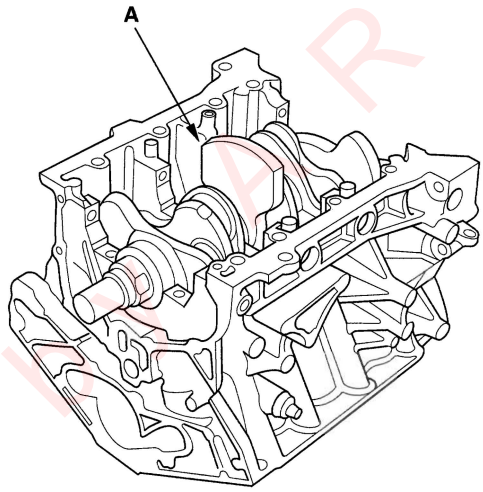

9. Apply new engine oil to the thrust washer surfaces. Install the thrust washers (A) in the No. 3 journal.

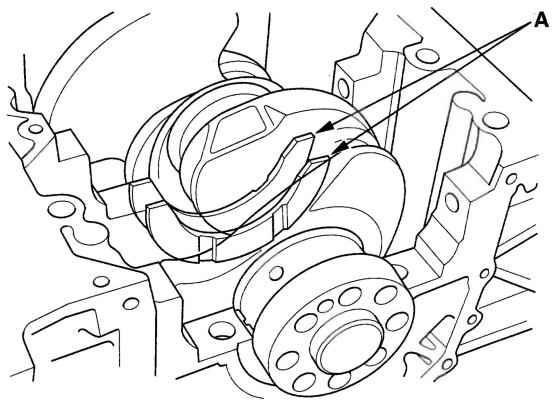

(cont'd)

Protected by COPYRIGHT

Crankshaft and Piston Installation (cont'd)

10. Install the bearings (A) and bearing caps (B) with the arrow (C) facing the timing belt end of the engine.

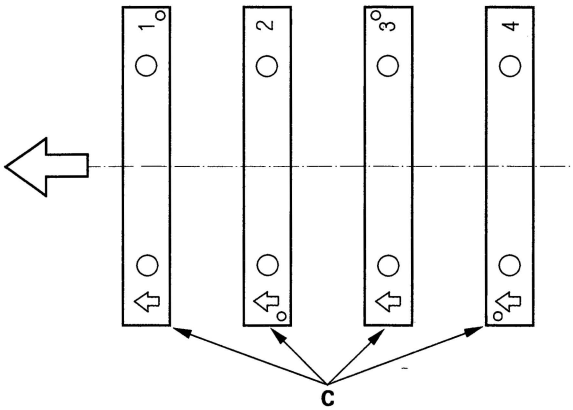

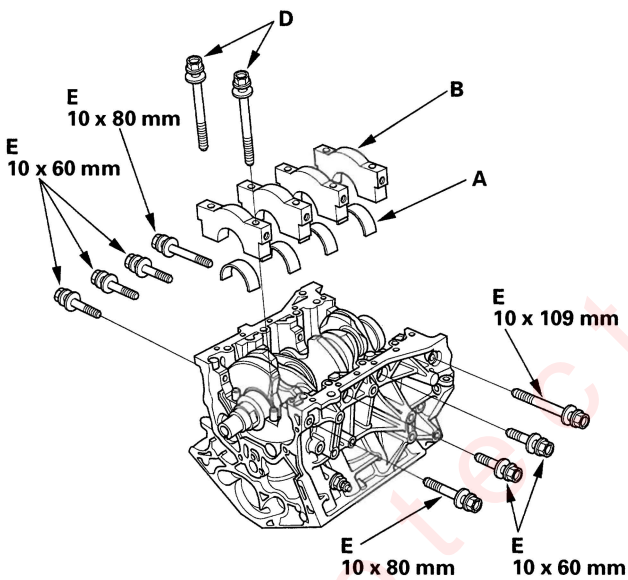

11. Apply new engine oil to the bolt threads and flanges, then loosely install the bearing cap bolts (D) and bearing cap side bolts (E).

12. Set the crankshaft to bottom dead center (BDC) for the cylinder you are installing the piston in.

13. Remove the connecting rod cap. Install the ring compressor, and check that the bearing is securely in place.

14. Position the piston with the arrow (A) facing the timing belt side of the engine.

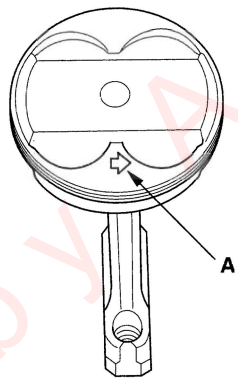

15. Position the piston in the cylinder, and tap it in using the wooden handle of a hammer (A). Maintain downward force on the ring compressor (B) to prevent the rings from expanding before entering the cylinder bore.

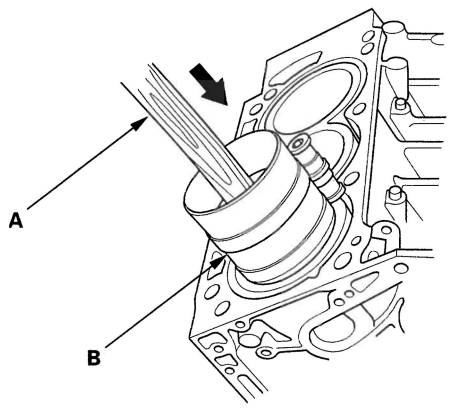

16. Stop after the ring compressor pops free, and check the connecting rod-to-crank journal alignment before pushing the piston into place.

Protected by AR

17. Line up the mark (A) on the connecting rod and cap, then install the cap.

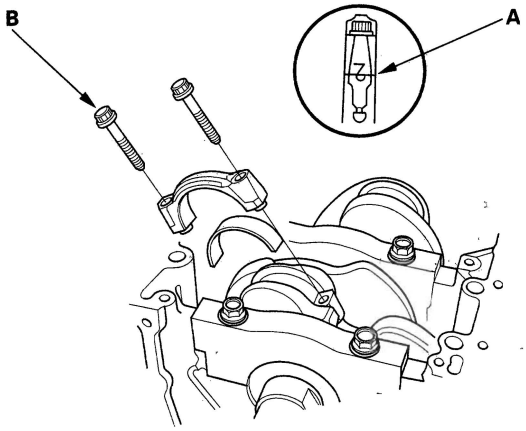

18. Apply new engine oil to the bolt threads. Torque the bolts (B) to 20 N·m (2.0 kgf·m, 14 lbf·ft).

19. Mark the connecting rod (A) and bolt head (B) as shown.

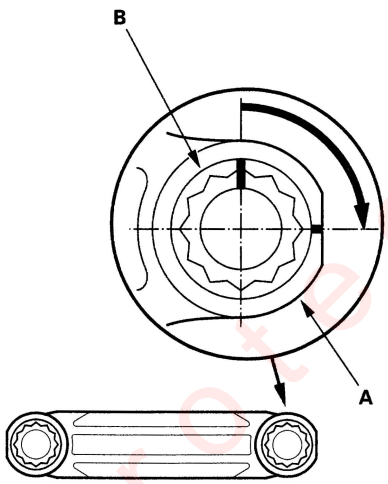

20. Tighten the bolt until the mark on the bolt head lines up with the mark on the connecting rod (turn the bolt 90°).

21. Tighten the bearing cap bolts (A), and then the bearing cap side bolts (B) to the specified torque in the sequence shown. Repeat the torque sequence again to asure the bolts are properly torqued.

A
11 x 1.5 mm
74 N·m (7.5 kgf·m, 54 lbf·ft)

B
10 x 1.25 mm
49 N·m (5.0 kgf·m, 36 lbf·ft)

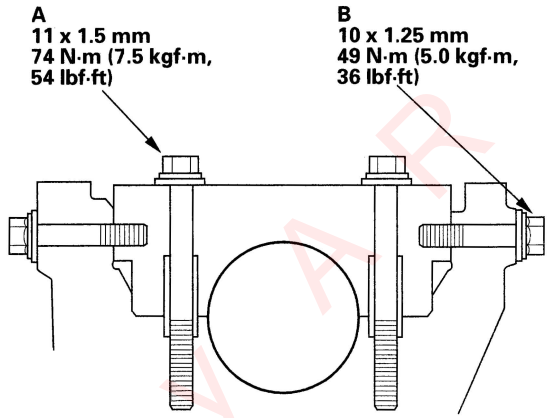

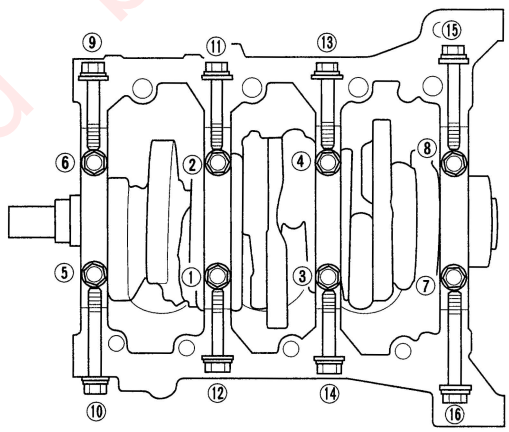

Protected by AR

(cont'd)

Crankshaft and Piston Installation (cont'd)

22. The seal mating surface on the engine block end cover should be dry. Apply a light coat of multipurpose grease to the crankshaft and to the lip of the seal.

23. Drive the new crankshaft oil seal until the special tool bottoms on the engine block end cover.

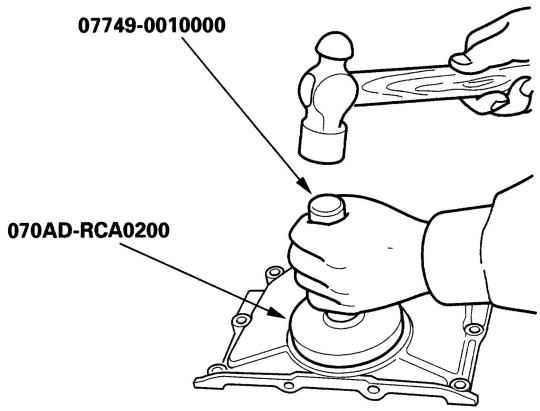

24. Remove any old liquid gasket from the engine block end cover mating surfaces, bolts, and bolt holes.

25. Clean and dry the engine block end cover mating surfaces.

26. Apply liquid gasket, P/N 08718-0001 or 08718-0003, evenly to the block mating surface of the engine block end cover and to the inner threads of the bolt holes. Install the dowel pins (A), new O-ring (B), and the engine block end cover (C) on the engine block.

    NOTE: Do not install the parts if 4 minutes or more have elapsed since applying the liquid gasket. Instead, reapply liquid gasket after removing the old residue.

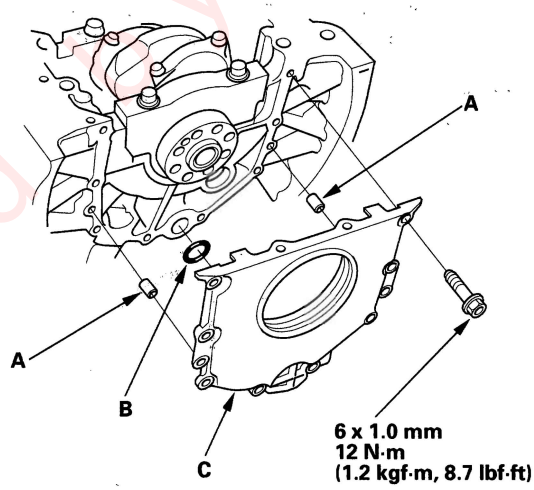

Protected by A

27. Remove any old liquid gasket from the oil pump mating surfaces, bolts, and bolt holes.

28. Clean and dry the oil pump mating surfaces.

29. Install the oil pump (A).

    -1 Install a new crankshaft oil seal in the oil pump (see step 2 on page 8-11).
    -2 Apply liquid gasket, P/N 08718-0001 or 08718-0003, evenly to the block mating surface of the oil pump and to the inner threads of the bolt holes.

    NOTE: Do not install the parts if 4 minutes or more have elapsed since applying the liquid gasket. Instead, reapply liquid gasket after removing the old residue.

    -3 Grease the lip of the oil seal, and apply oil to the new O-rings (B).
    -4 Install the dowel pins (C), then align the inner rotor with the crankshaft, and install the oil pump.
    -5 Clean the excess grease off the crankshaft, and check the seal for distortion.

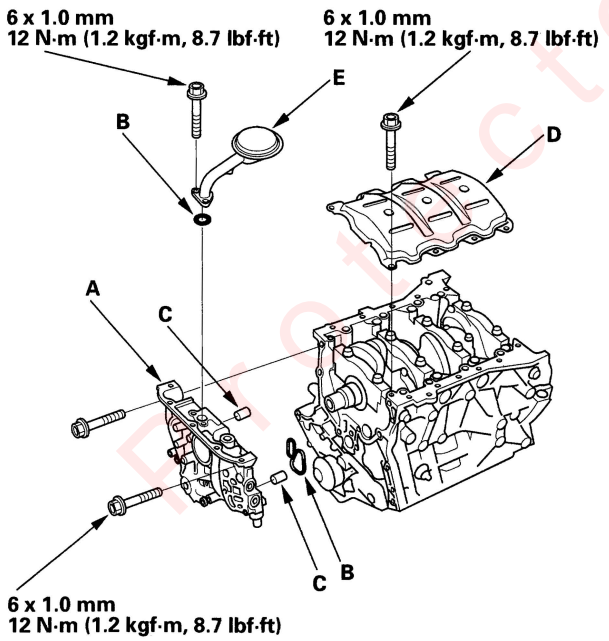

30. Install the baffle plate (D), then install the oil screen (E).

31. Install the VTEC solenoid valve/oil filter assembly (A), with a new VTEC solenoid valve filter (B).

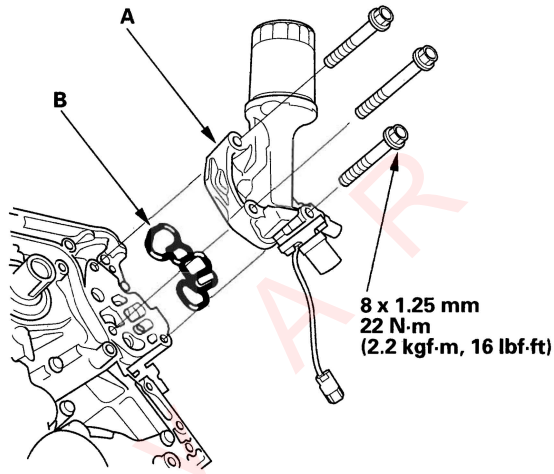

32. Install the oil pan (see page 7-28).

33. Install the crankshaft position (CKP) sensor (see page 11-168).

34. Install the cylinder heads (see page 6-50).

35. Install the transmission:

    • Manual transmission (see page 13-22).
    • Automatic transmission (see page 14-217).

36. Install the engine assembly (see page 5-12).

    NOTE: When any crankshaft or connecting rod bearing is replaced, after assembly it is necessary to run the engine at idling speed until it reaches normal operating temperature, then continue to run it for about 15 minutes.

Protected by AR

Oil Pan Installation

1. Remove any old liquid gasket from the oil pan mating surfaces, bolts, and bolt holes.
2. Clean and dry the oil pan mating surfaces.
3. Apply liquid gasket, P/N 08718-0001 or 08718-003, evenly to the oil pan mating surface of the engine block and to the inner threads of the bolt holes.

   NOTE: Do not install the parts if 4 minutes or more have elapsed since applying liquid gasket. Instead, reapply liquid gasket after removing the old residue.

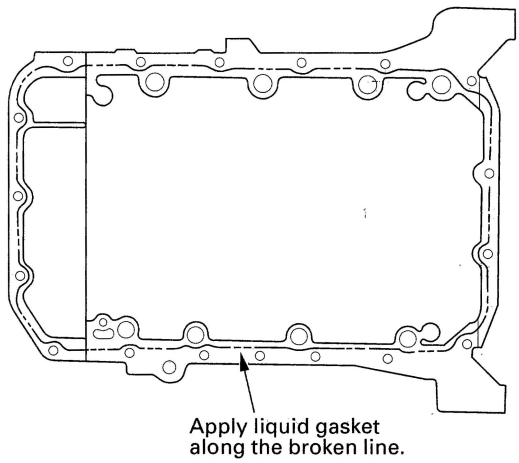

4. Install the oil pan on the engine block.
5. Tighten the bolts in two or three steps. In the final step, tighten all bolts, in sequence, to 12 N·m (1.2 kgf·m, 8.7 lbf·ft).

   NOTE: After assembly, wait at least 30 minutes before filling the engine with oil.

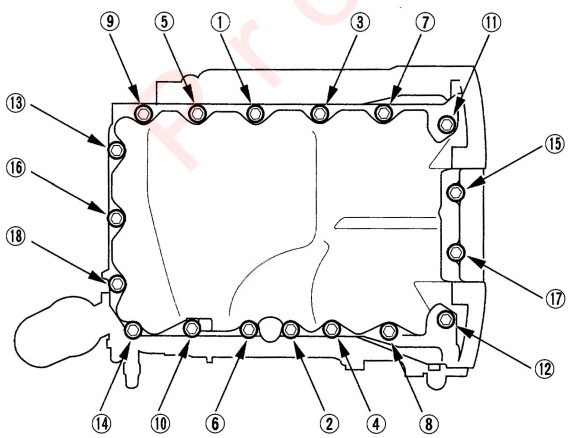

6. Tighten the two bolts (A) securing the transmission, then install the torque converter cover (B).

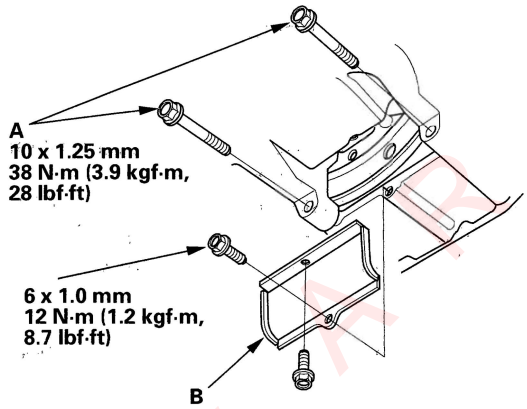

If the engine is still in the vehicle, do the following steps

7. Install exhaust pipe A using new gaskets and new self locking nuts (see step 23 on page 5-17).
8. Install the engine under cover.

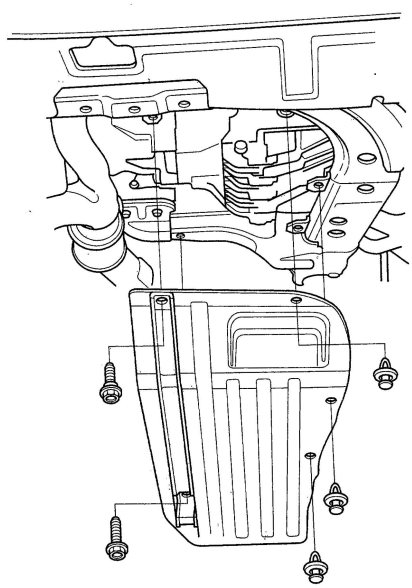

9. Install splash shield (see step 30 on page 5-17).
10. Refill the engine with oil (see step 3 on page 8-6).
11. Lower the hoist.

Protected by AR

Pulley End Crankshaft Oil Seal Installation - In Car

Special Tools Required
Oil seal driver, 64 mm 070AD-RCA0100

1. Remove the crankshaft position (CKP) sensor, timing belt, and timing belt drive pulley (see page 6-26).
2. Remove the pulley end crankshaft oil seal.
3. Clean and dry the crankshaft oil seal housing.
4. Apply a light coat of multipurpose grease to the crankshaft and to the lip of the seal.
5. Using the seal driver, drive in the crankshaft oil seal until the driver bottoms against the oil pump. When the seal is in place, clean any excess grease off the crankshaft, and check that the oil seal lip is not distorted.

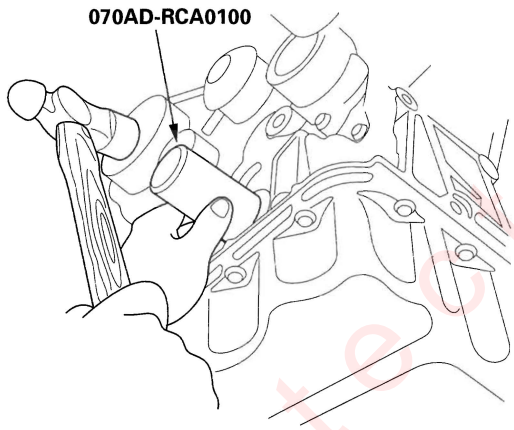

6. Install the timing belt drive pulley, CKP sensor, and timing belt (see page 6-26).

Transmission End Crankshaft Oil Seal Installation - In Car

Special Tools Required
- Driver 07749-0010000
- Driver attachment, 106 mm 070AD-RCA0200

1. A/T: Remove the transmission (see page 14-205) and drive plate (see page 14-216).
2. M/T: Remove the transmission (see page 13-13), the clutch disc and pressure plate (see page 12-12), and the flywheel (see page 12-15).
3. Remove the transmission end crankshaft oil seal.
4. Clean and dry the crankshaft oil seal housing.
5. Apply a light coat of multipurpose grease to the crankshaft and to the lip of the seal.
6. Using the special tools, drive in the crankshaft oil seal until the driver attachment bottoms against the engine block end cover. Align the hole in the driver attachment with the pin on the crankshaft.

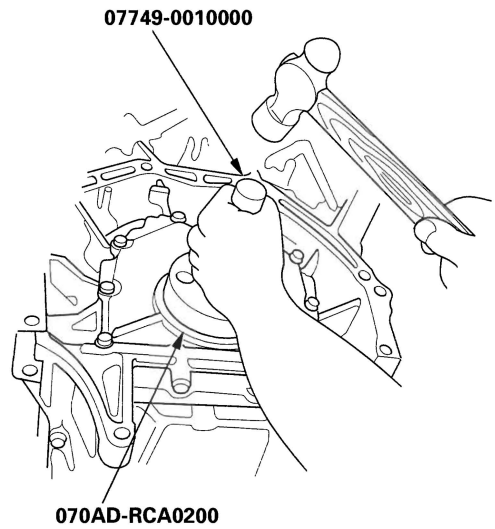

7. Clean any excess grease off the crankshaft, and check that the oil seal lip is not distorted.
8. A/T: Install the drive plate (see page 14-216), and the transmission (see page 14-217).
9. M/T: Install the flywheel (see page 12-15), the clutch disc and pressure plate (see page 12-16), and the transmission (see page 13-22),

Protected by AR

Drain Bolt Installation

NOTE: When installing the drain bolt, always use new washer.

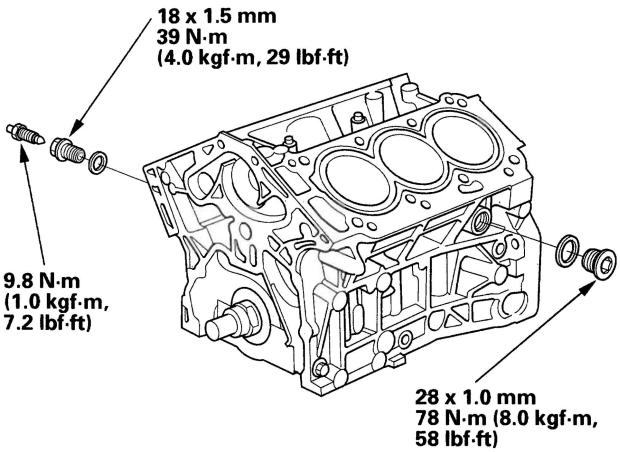

Protected by AR

Engine Mechanical

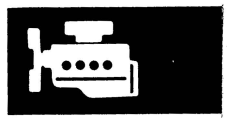

Engine Lubrication

Special Tools 8-2
Component Location Index 8-3
Symptom Troubleshooting Index 8-4
Oil Pressure Switch Test 8-5
Oil Pressure Test 8-5
Engine Oil Replacement 8-6
Engine Oil Filter Replacement 8-6
Oil Filter Feed Pipe Replacement 8-8
Oil Pump Overhaul 8-9
Oil Pressure Switch Replacement 8-12

Protected by AR

Special Tools

Ref. No.	Tool Number	Description	Qty
①	07HAA-PJ70100	Oil Filter Wrench	1
②	070AD-RCA0100	Oil Seal Driver, 64 mm	1

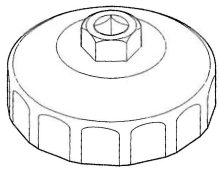

①

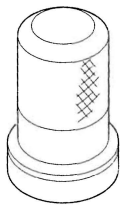

②

Protected by A R

Component Location Index

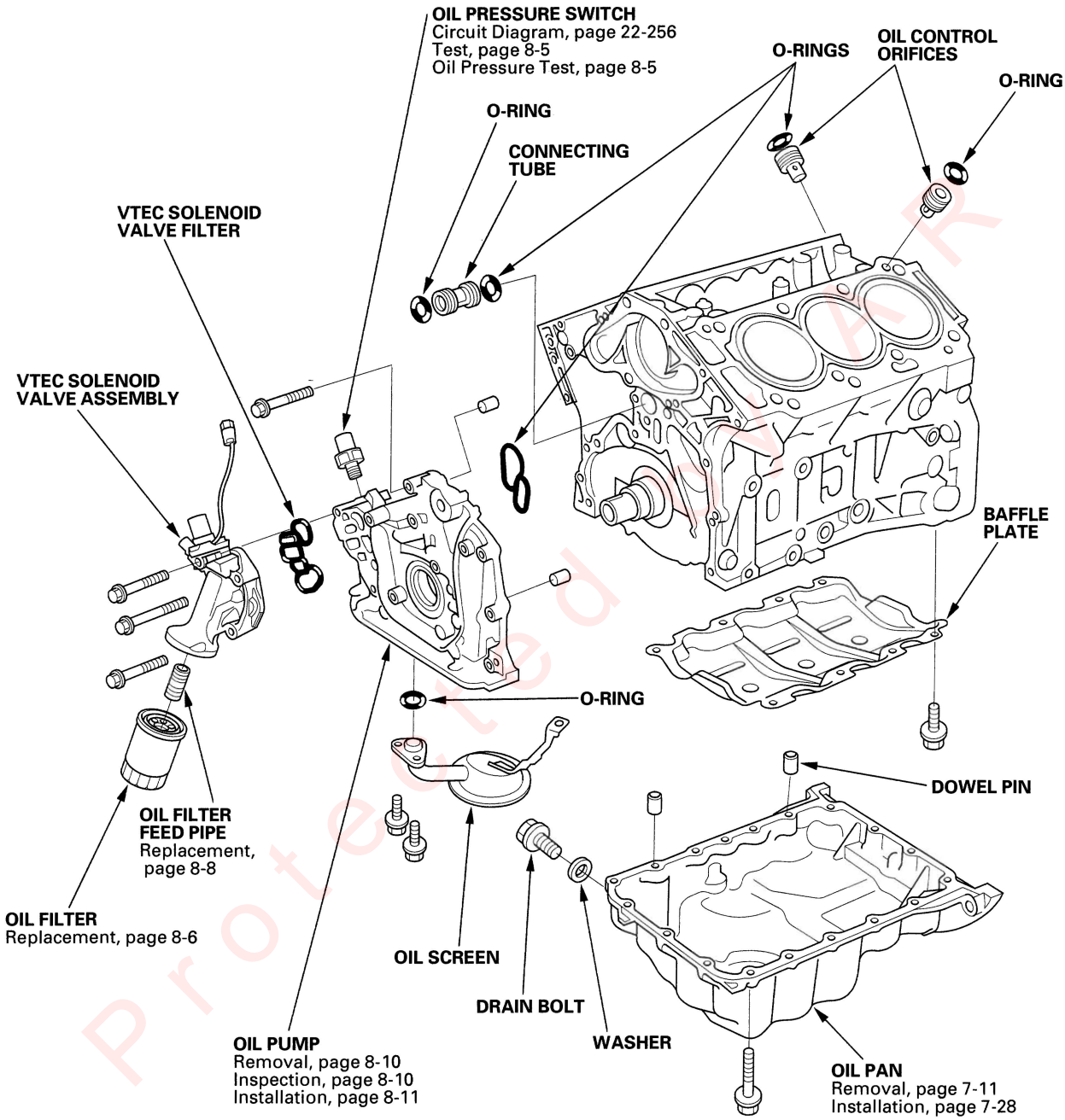

Protected

Symptom Troubleshooting Index

Symptom	Diagnostic procedure	Also check for
Excessive engine oil consumption	1. Check for worn valve guide(s) (see page 6-43) or worn valve stem seal(s). 2. Check for damaged or worn piston ring(s). 3. Check for damaged or worn engine internal parts (cylinder wall, pistons, etc.) (see page 7-15). 4. Check for oil leaks. 5. Check the operation of the positive crankcase ventilation (PCV) system (see page 11-297). 6. Check the engine oil for dirt or improper viscosity.	
Low engine oil pressure	1. Check the oil screen for clogging. 2. Test the oil pump (see page 8-5). 3. Check the relief valve. 4. Test the oil pressure switch. 5. Check for excessive clearance in the engine (bearing-to-jounal, etc.). 6. Check the engine oil for dirt or improper viscosity.	
High engine oil pressure	Check the relief valve.	

Protected by A R

Oil Pressure Switch Test

1. Remove the YEL/RED wire (A) from the engine oil pressure switch (B).

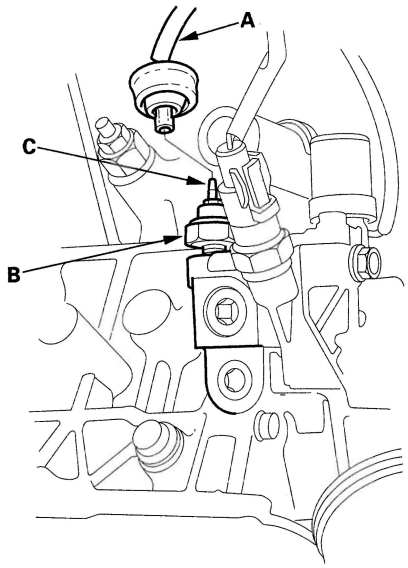

2. Check for continuity between the positive terminal (C) and the engine (ground). There should be continuity with the engine stopped. There should be no continuity with the engine running.

Oil Pressure Test

If the low oil pressure indicator stays on with the engine running, check the engine oil level. If the oil level is correct:

1. Remove the engine oil pressure switch, then install an oil pressure gauge (A).

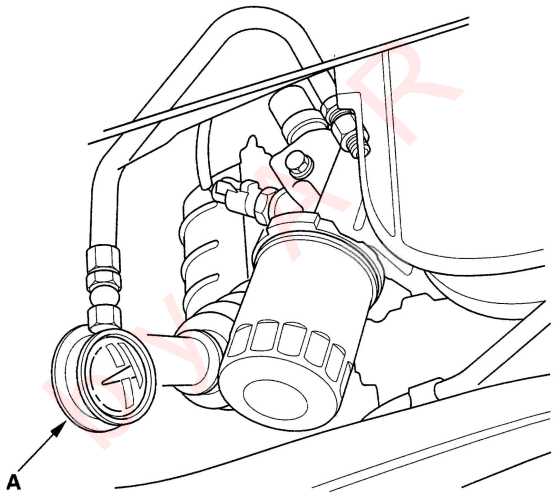

2. Start the engine. Shut it off immediately if the gauge registers no oil pressure. Repair the problem before continuing.

3. Allow the engine to reach operating temperature (fan comes on at least twice). The pressure should be:

Engine Oil Temperature: 176°F (80°C)
Engine Oil Pressure:
At Idle: 70 kPa (0.7 kgf/cm², 10 psi) minimum
At 3,000 rpm: 490 kPa (5.0 kgf/cm², 71 psi) minimum

4. If oil pressure is NOT within specifications, inspect these items:

- Check the oil screen for clogging.
- Inspect the oil pump (see page 8-10).

Protected by AR

Engine Oil Replacement

1. Warm up the engine.
2. Remove the drain bolt (A), and drain the engine oil.

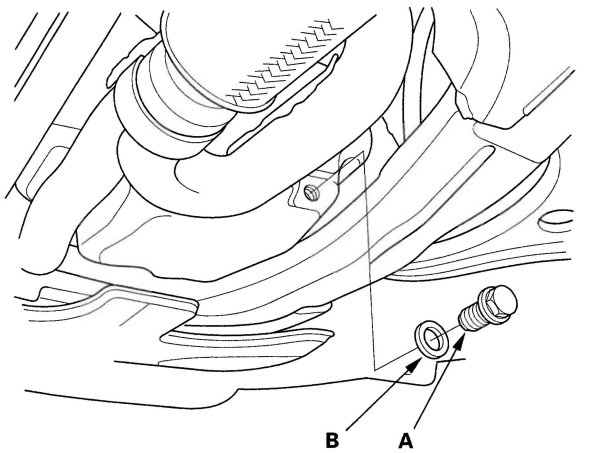

3. Reinstall the drain bolt with a new washer (B).
4. Refill with the recommended oil (see page 3-2).

   Capacity:
   4.0 ℓ (4.2 US qt) at oil change.
   4.3 ℓ (4.5 US qt) at oil change including filter.
   5.0 ℓ (5.3 US qt) after engine overhaul.

5. Run the engine for more than 3 minutes, then check for oil leakage.

Engine Oil Filter Replacement

Special Tools Required
Oil filter wrench 07HAA-PJ70100

1. Remove the oil filter with the special tool.
2. Inspect the filter to make sure the rubber seal is not stuck to the oil filter seating surface of the engine.
3. Inspect the threads (A) and rubber seal (B) on the new filter. Clean the seat on the engine block, then apply a light coat of new engine oil to the filter rubber seal. Use only filters with a built-in bypass system.

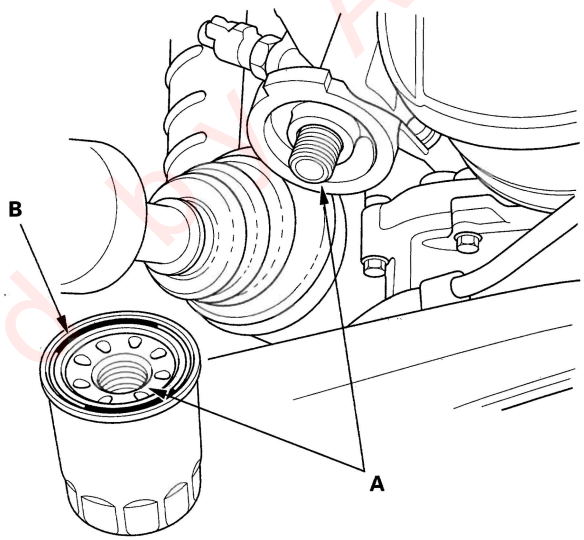

Protected by A

4. Install the oil filter by hand.

5. After the rubber seal seats, tighten the oil filter clockwise with the special tool.

   Tighten: 3/4 turn clockwise.
   Tightening torque: 12 N·m (1.2 kgf·m, 8.7 lbf·ft)

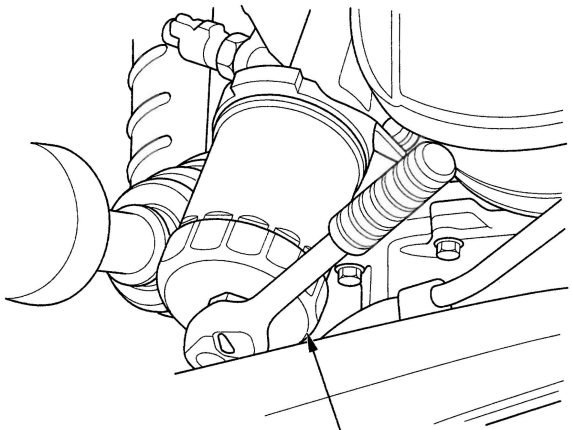

07HAA-PJ70100

6. If four numbers or marks (1 to 4 or ▼ to ▼▼▼▼) are printed around the outside of the filter, you can use the following procedure to tighten the filter.

   - Spin the filter on until its seal lightly seats against the block, and note which number or mark is at the bottom.
   - Tighten the filter by turning it clockwise three numbers or marks from the one you noted. For example, if mark ▼ is at the bottom when the seal is lightly seated, tighten the filter until the mark ▼▼▼▼ comes around to the bottom.

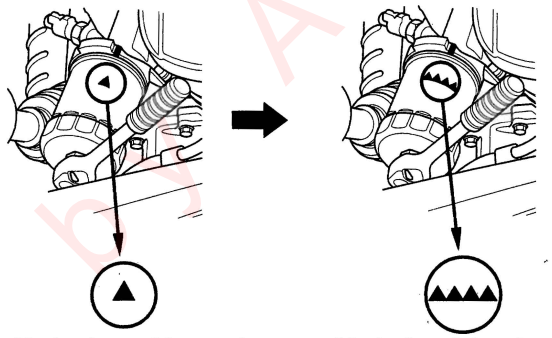

Mark when rubber seal is seated.

Mark after tightening.

Number or Mark when rubber seal is seated	1 or ▼	2 or ▼▼	3 or ▼▼▼	4 or ▼▼▼▼
Number or Mark after tightening	4 or ▼▼▼▼	1 or ▼	2 or ▼▼	3 or ▼▼▼

7. After installation, fill the engine with oil up to the specified level, run the engine for more than 3 minutes, then check for oil leakage.

8. Reset the multi-information display (see page 3-6).

Protected by A

Oil Filter Feed Pipe Replacement

1. Remove the filter (see page 8-6).
2. Remove the oil filter feed pipe.

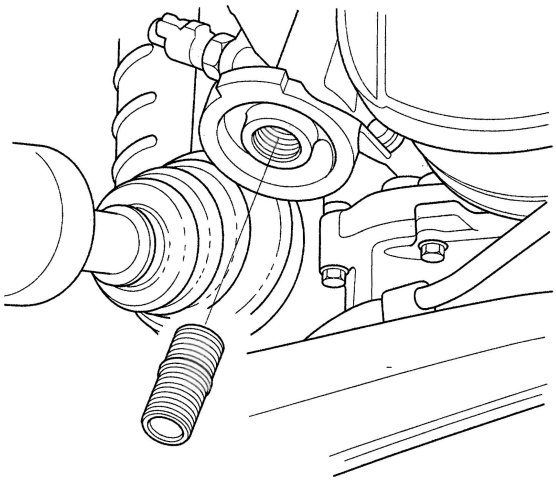

3. Install two 20 x 1.5 mm nuts (A) onto the new oil filter feed pipe, and hold one nut with a wrench, then tighten the other nut.

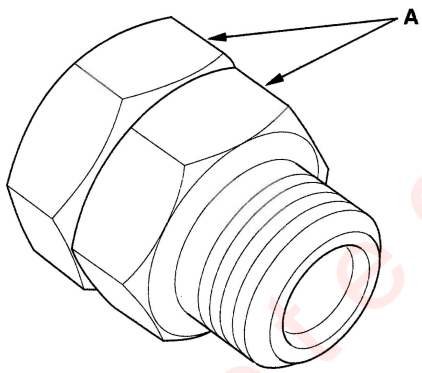

4. Tighten the oil filter feed pipe to 49 N·m (5.0 kgf·m, 36 lbf·ft), then remove the nuts from the oil filter feed pipe.

Protected by AR

Oil Pump Overhaul

Exploded View

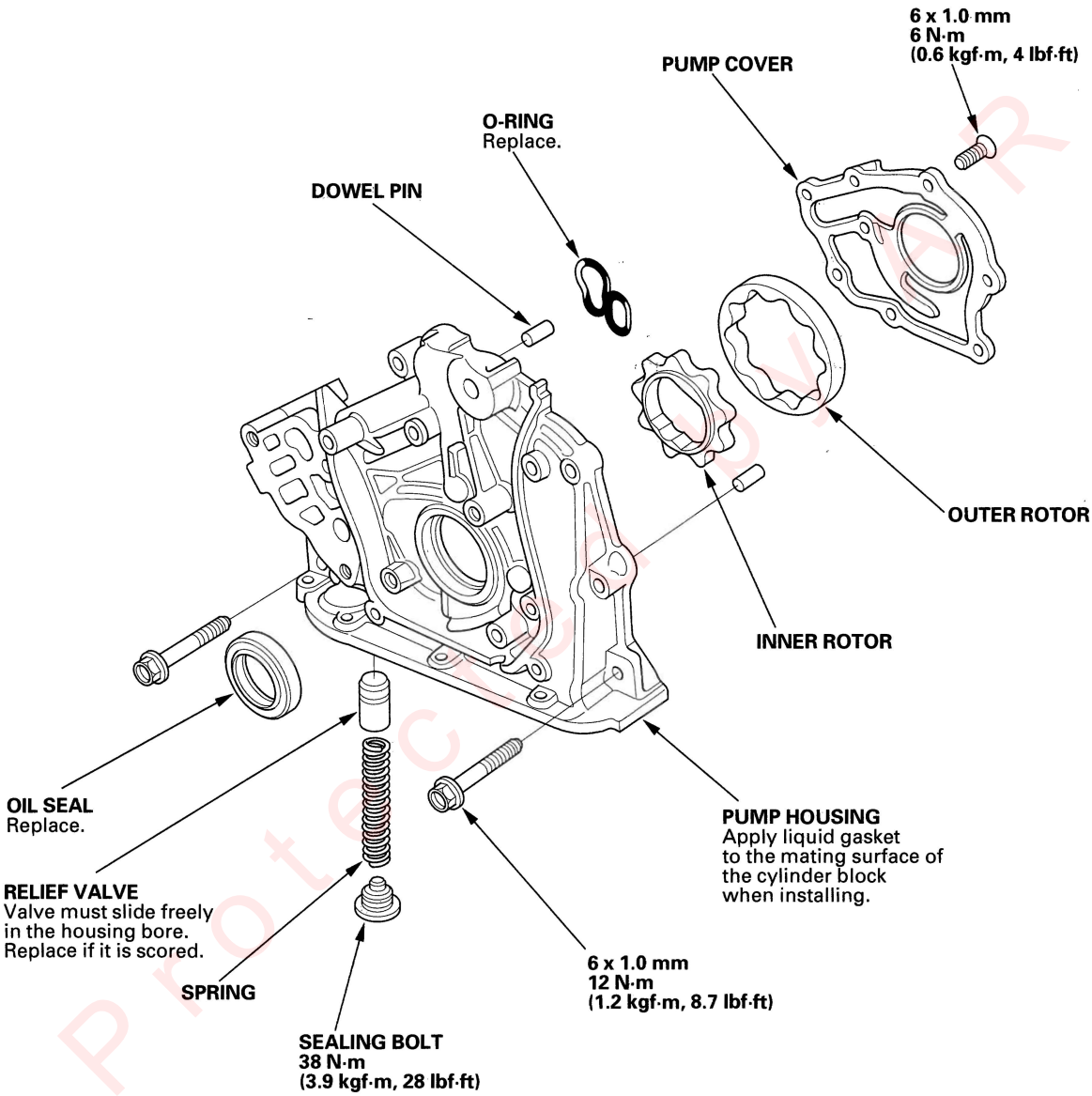

Protected by ARR

(cont'd)

Oil Pump Overhaul (cont'd)

Special Tools Required
- Oil seal driver, 64 mm 070AD-RCA0100
- Engine support hanger, A and Reds AAR-T-12566 (available through Honda Tool and Equipment program, 888-424-6857)
- Engine hanger balance bar VSB02000019

Removal

1. Drain the engine oil (see page 8-6).
2. Remove the timing belt (see page 6-14).
3. Remove the crankshaft position (CKP) sensor (see page 11-168).
4. Remove the left side, left rear, and right rear engine compartment covers. Remove the intake manifold front bulkhead covers.
5. Remove the strut brace (see step 15 on page 5-4).
6. Lift and support the engine with the special tools (see step 51 on page 5-9).
7. Remove the VTEC solenoid valve and oil filter assembly (see page 11-227).
8. Remove the oil pan (see page 7-11).
9. Remove the oil screen (A).

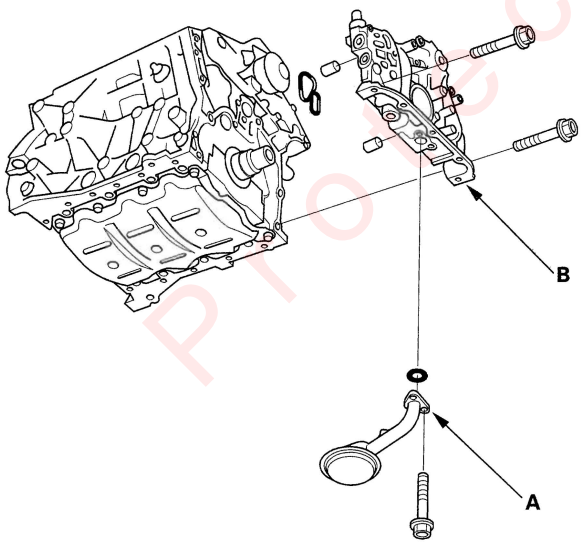

10. Remove the mounting bolts and the oil pump assembly (B).

Inspection

1. Remove the screws from the pump housing, then separate the housing and cover.
2. Check the inner-to-outer rotor radial clearance between the inner rotor (A) and outer rotor (B). If the inner-to-outer rotor clearance exceeds the service limit, replace the oil pump assembly.

Inner Rotor-to-Outer Rotor Radial Clearance
Standard (New): 0.04—0.16 mm (0.002—0.006 in.)
Service Limit: 0.20 mm (0.008 in.)

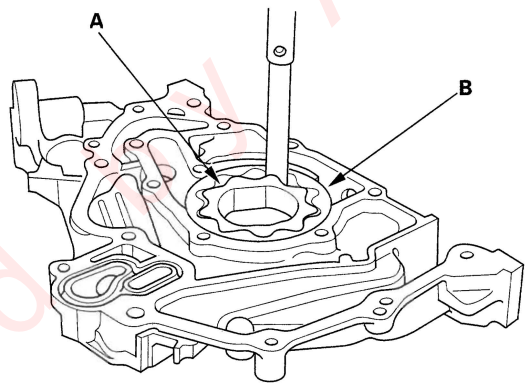

3. Check the housing-to-rotor axial clearance between the rotors (A) and pump housing (B). If the housing-to-rotor axial clearance exceeds the service limit, replace the oil pump assembly.

Housing-to-Rotor Axial Clearance
Standard (New): 0.02—0.07 mm (0.001—0.003 in.)
Service Limit: 0.12 mm (0.005 in.)

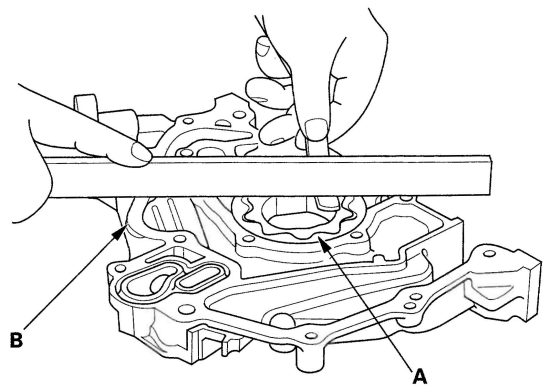

Protected by AR

4. Check the housing-to-outer rotor radial clearance between the outer rotor (A) and pump housing (B). If the housing-to-outer rotor radial clearance exceeds the service limit, replace the oil pump assembly.

Housing-to-Outer Rotor Radial Clearance
Standard (New): 0.10—0.19 mm (0.004—0.007 in.)
Service Limit: 0.20 mm (0.008 in.)

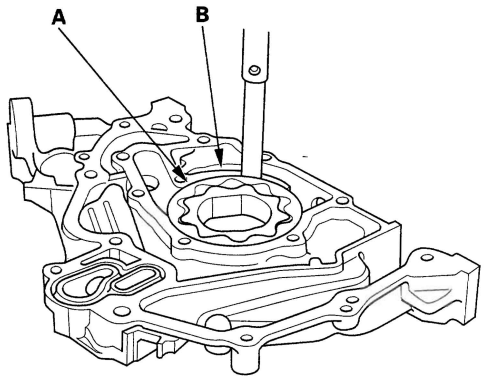

5. Inspect both rotors and pump housing for scoring or other damage. Replace the parts, if necessary.

6. Apply liquid thread lock to the pump housing screws, then install the oil pump cover.

7. Check that the oil pump turns freely.

Installation

1. Remove the old oil seal from the oil pump.

2. Gently tap in the new oil seal until the special tool bottoms on the pump.

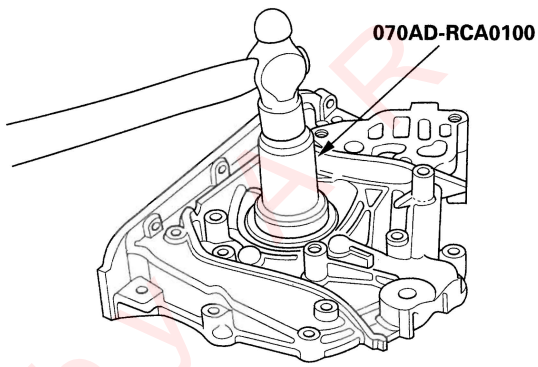

3. Remove any old liquid gasket from the oil pump mating surfaces, bolts, and bolt holes.

4. Clean and dry the oil pump mating surfaces.

(cont'd)

Protected by

Oil Pump Overhaul (cont'd)

5. Install the oil pump (A).
   -1 Apply liquid gasket, P/N 08718-0001 or 08718-0003, evenly to the block mating surface of the oil pump and to the inner threads of the bolt holes.
   NOTE: Do not install the parts if 4 minutes or more have elapsed since applying liquid gasket. Instead, reapply liquid gasket after removing the old residue.
   -2 Grease the lip of the oil seal, and apply oil to the new O-rings (B).
   -3 Install the dowel pins (C), then align the inner rotor with the crankshaft and install the oil pump.
   -4 Clean the excess grease off the crankshaft, and check the seal for distortion.

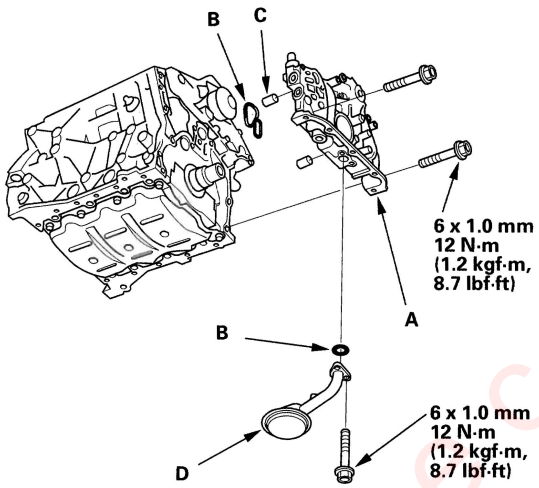

6. Install the oil screen (D).
7. Install the oil pan (see page 7-28).
8. Install the VTEC solenoid valve and oil filter assembly (see page 11-227).
9. Install the CKP sensor (see page 11-168).
10. Install the idler pulley.
11. Install the timing belt (see page 6-16).
12. Remove the engine balance bar and hanger.
13. Install the strut brace (see step 15 on page 5-4).
14. Install the engine compartment covers, the intake manifold cover, and the bulkhead cover.
15. After assembly, wait at least 30 minutes before filling the engine with oil.

Oil Pressure Switch Replacement

1. Disconnect the oil pressure switch connector, then remove the oil pressure switch.

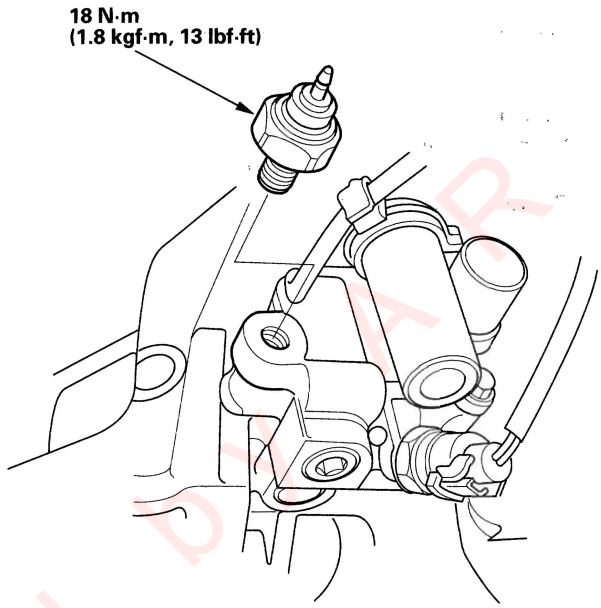

2. Remove any old liquid gasket from the switch and switch mounting hole.
3. Apply liquid gasket to the new oil pressure switch, then install the oil pressure switch.

Protected by AR

Engine Mechanical

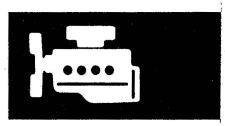

Intake Manifold and Exhaust System

Intake Manifold Removal and Installation 9-2
Exhaust Pipe and Muffler Replacement 9-6

Protected by A R

Intake Manifold Removal and Installation

Exploded View

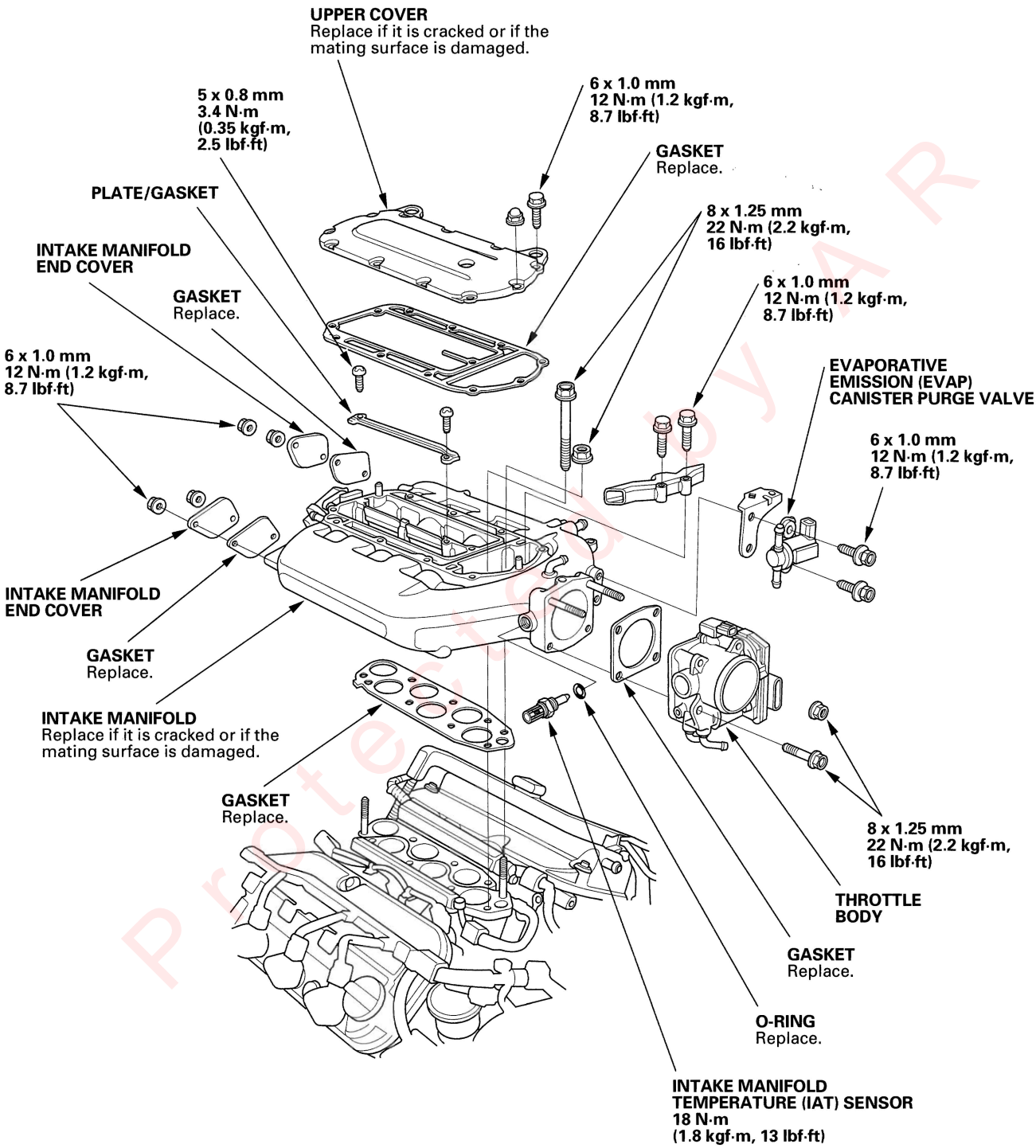

Protected by A R

Removal

1. Remove the intake manifold cover.

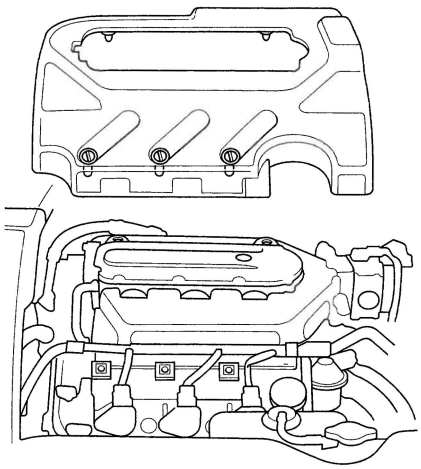

2. Remove the air intake duct.

3. Remove the engine mount control solenoid valve (A), positive crankcase ventilation (PCV) hose (B), brake booster vacuum hose (C), and vacuum hose (D).

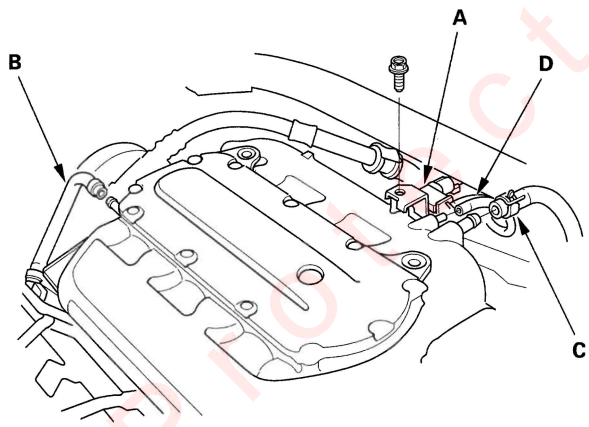

4. Remove the evaporative emission (EVAP) canister purge hose (A) and water bypass hoses (B), then plug the water bypass hoses.

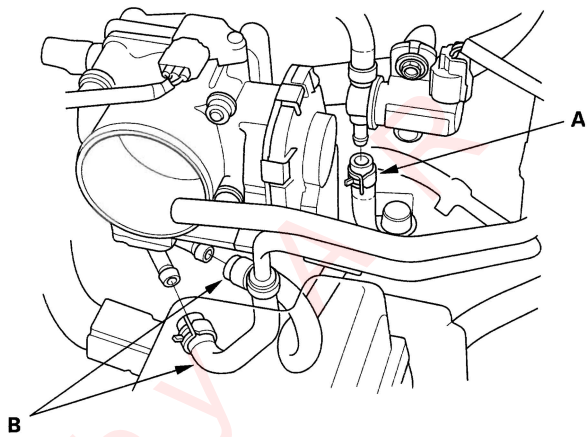

5. Remove the engine wire harness connectors and wire harness clamps from the intake manifold.

- Intake air temperature (IAT) sensor connector
- Idle air control (IAC) valve connector
- Throttle actuator connector
- Manifold absolute pressure (MAP) sensor connector
- Evaporative emission (EVAP) canister purge valve connector
- Intake manifold runner control (IMRC) solenoid valve connector

(cont'd)

Protected by

Intake Manifold Removal and Installation (cont'd)

6. Remove the upper cover mounting bolts and nuts sequentially in two or three steps.

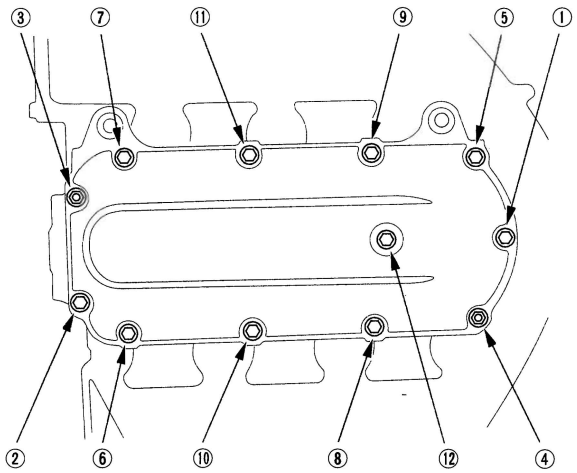

7. Remove the intake manifold mounting bolts and nuts sequentially in two or three steps.

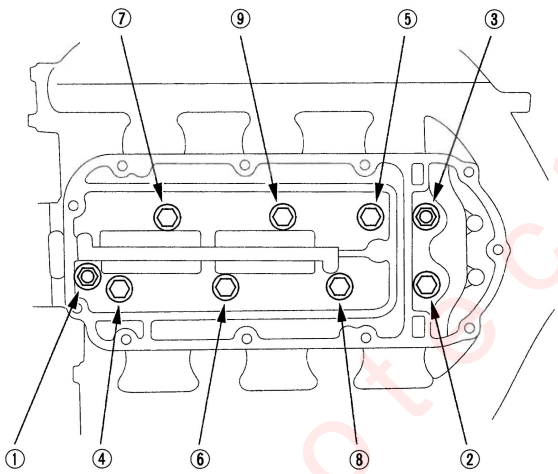

Installation

1. Install the intake manifold. Tighten the bolts and nuts sequentially in two or three steps. Always use a new intake manifold gasket.

Specified torque:
8 x 1.25 mm
22 N·m (2.2 kgf·m, 16 lbf·ft)

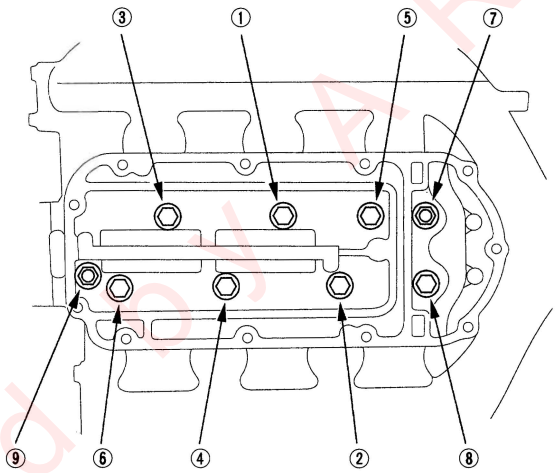

2. Install the upper cover. Tighten the bolts and nuts sequentially in two or three steps. Always use a new gasket.

Specified torque:
6 x 1.0 mm
12 N·m (1.2 kgf·m, 8.7 lbf·ft)

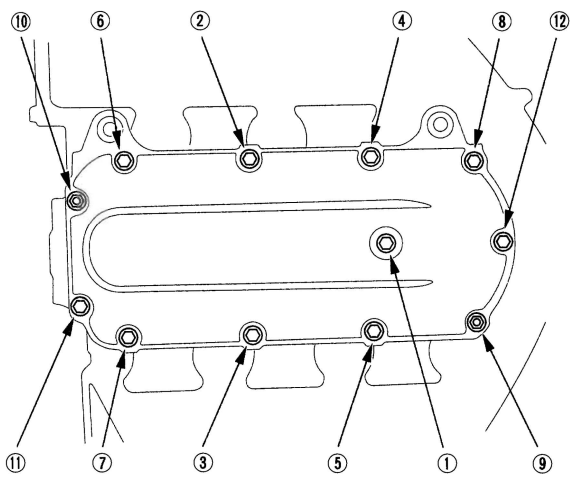

Protected by AR

3. Install the EVAP canister purge hose (A) and water bypass hoses (B).

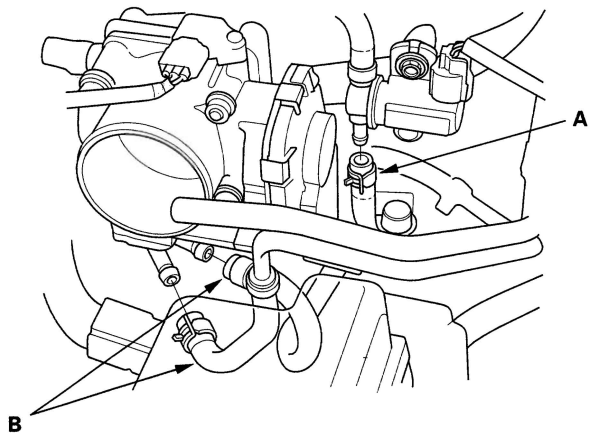

4. Install the engine mount control solenoid valve (A), positive crankcase ventilation (PCV) hose (B), brake booster vacuum hose (C), and vacuum hose (D).

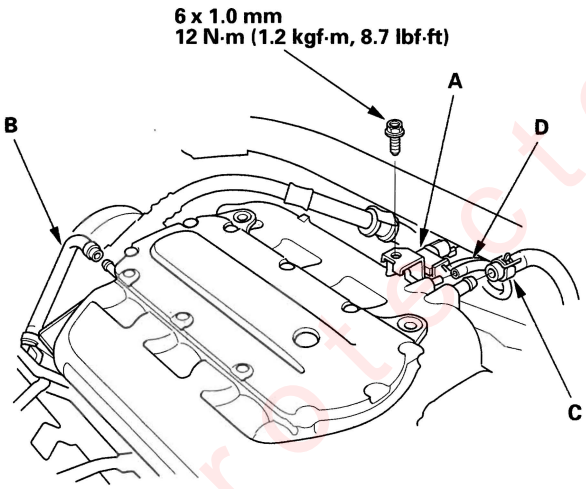

5. Install the intake air duct.

6. Clean up any spilled engine coolant.

7. After installation, check that all tubes, hoses and connectors are installed correctly.

8. Install the intake manifold cover.

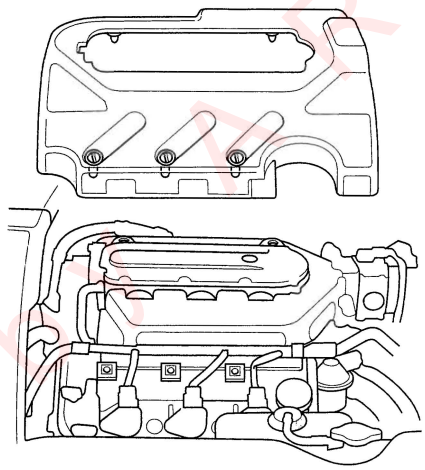

9. Refill the radiator with engine coolant, then bleed air from the cooling system with the heater valve open (see step 8 on page 10-7).

Protected by MAR

Exhaust Pipe and Muffler Replacement

NOTE: Use new gaskets and self-locking nuts when reassembling.

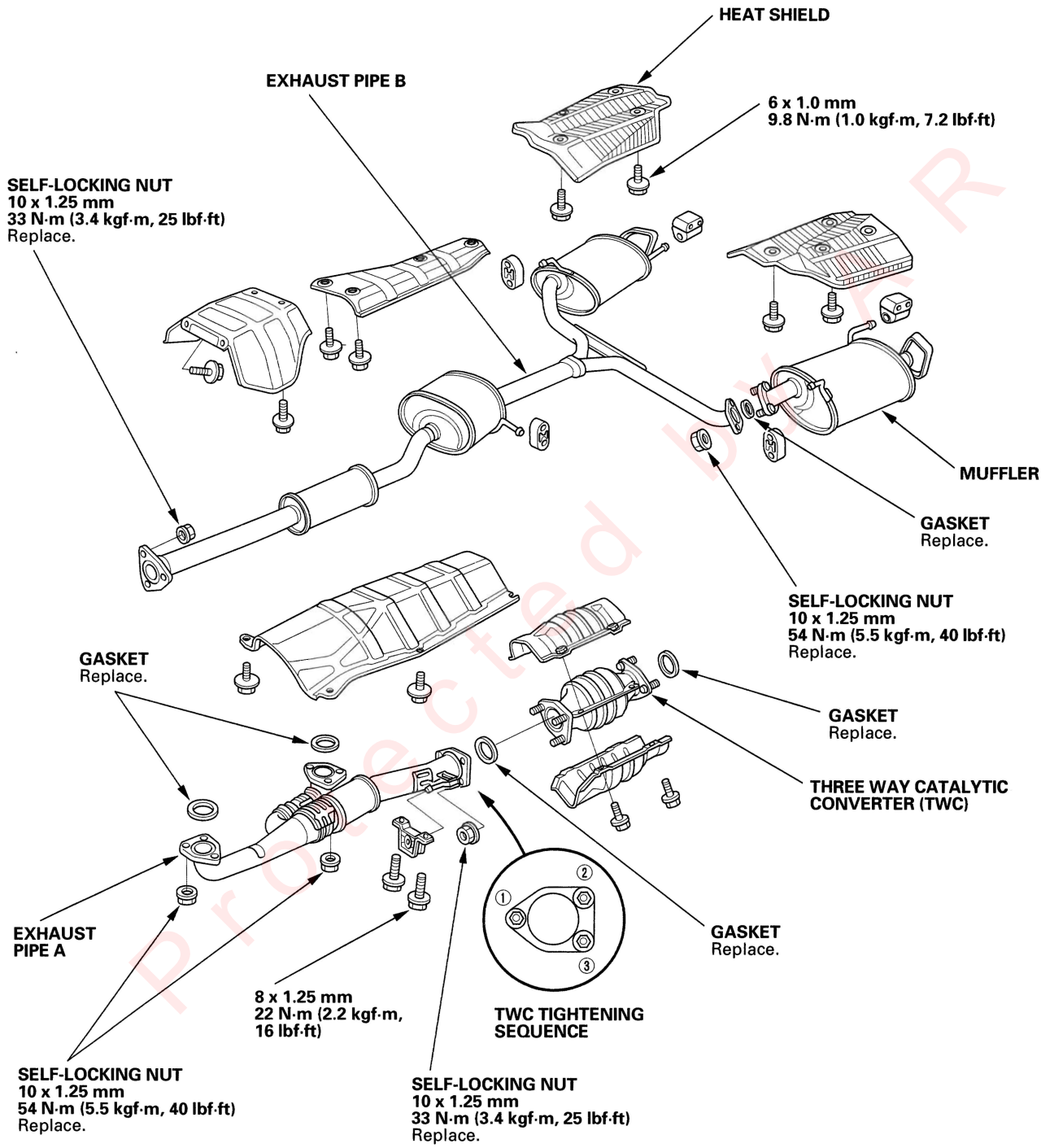

Protected by ER

Engine Cooling



Cooling System

Component Location Index 10-2
Radiator Cap Test 10-3
Radiator Test 10-3
Fan Motor Test 10-4
Thermostat Test 10-4
Water Pump Inspection 10-5
Water Pump Replacement 10-5
Coolant Check 10-6
Coolant Replacement 10-6
Thermostat Replacement 10-8
Water Passage Replacement 10-9
Radiator and Fan Replacement 10-10

Fan Controls

Component Location Index 10-11
Symptom Troubleshooting Index 10-12
Circuit Diagram 10-13
Radiator Fan High Speed Circuit Troubleshooting 10-14

Protected by AR

Component Location Index

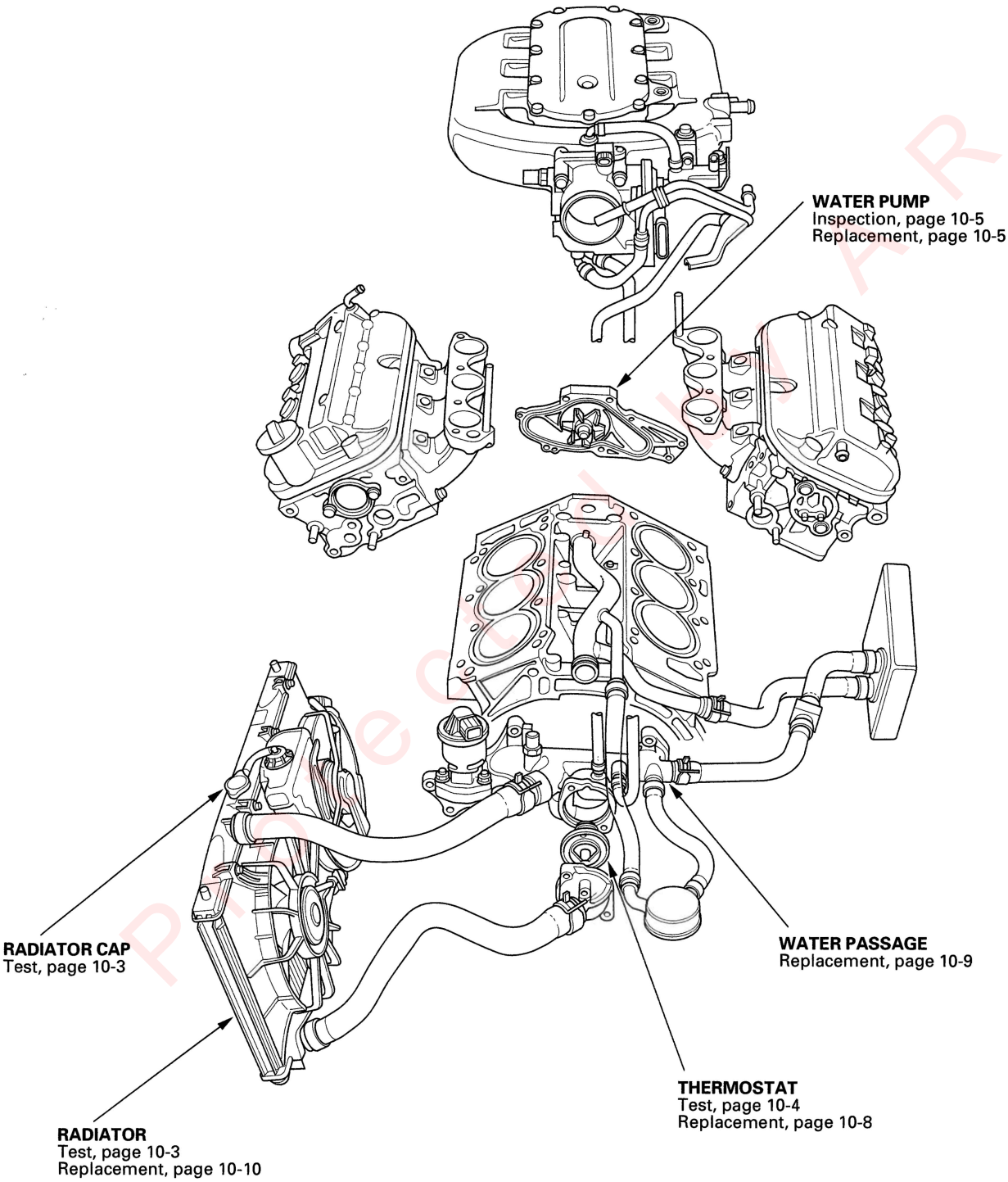

Radiator Cap Test

1. Remove the radiator cap (A), wet its seal with engine coolant, then install it on a commercially available pressure tester (B).

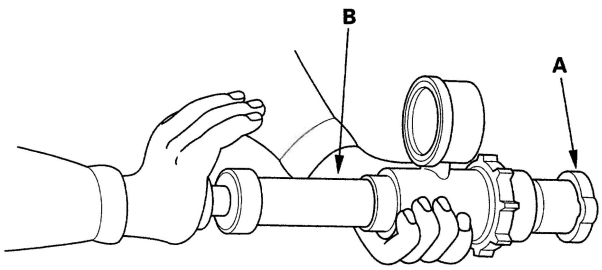

2. Apply a pressure of 93—123 kPa (0.95—1.25 kgf/cm^2, 14—18 psi).
3. Check for a drop in pressure.
4. If the pressure drops, replace the cap.

Radiator Test

1. Wait until the engine is cool, then carefully remove the radiator cap, and fill the radiator with engine coolant to the top of the filler neck.
2. Attach a commercially available pressure tester (A) to the radiator, and apply a pressure of 93—123 kPa (0.95—1.25 kgf/cm^2, 14—18 psi).

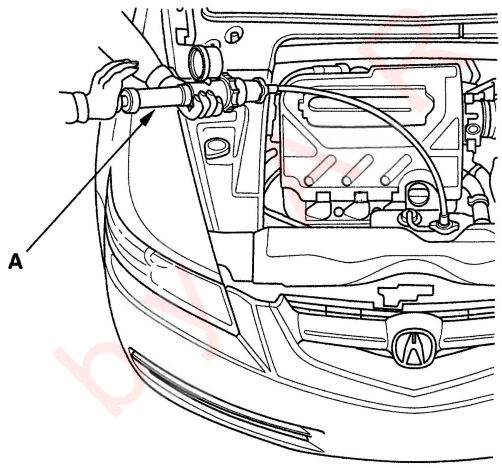

3. Inspect for engine coolant leaks and a drop in pressure.
4. Remove the tester, then reinstall the radiator cap.

Protected by

Fan Motor Test

1. Disconnect the 2P connectors from the radiator fan motor (A) and condenser fan motor (B).

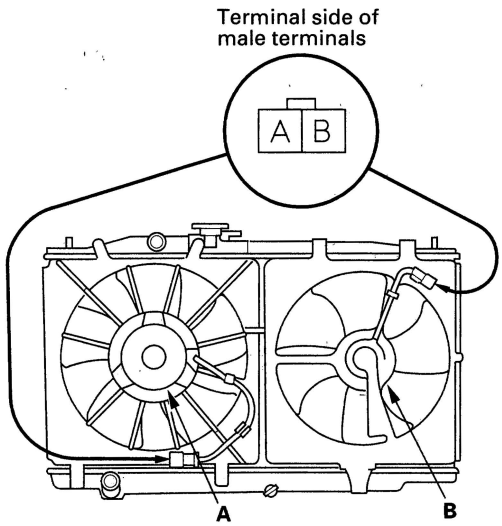

2. Test each motor by connecting battery power to the B terminal and ground to the A terminal.

3. If either motor fails to run or does not run smoothly, replace it (see page 10-10).

Thermostat Test

Replace the thermostat if it is open at room temperature.

To test a closed thermostat:

1. Suspend the thermostat (A) in a container of water. Do not let the thermometer (B) touch the bottom of the hot container.

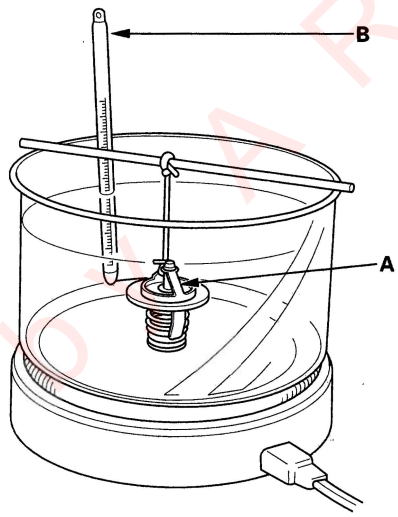

2. Heat the water and check the temperature with a thermometer. Check the temperature at which the thermostat first opens, and at which it is fully open.

3. Measure the lift height of the thermostat when it is fully open.

Standard Thermostat

Lift height:	**above 10.0 mm (0.39 in.)**
Starts opening:	**169 – 176°F (76 – 80°C)**
Fully open:	**194°F (90°C)**

Protected by AR

Water Pump Inspection

1. Remove the timing belt (see page 6-14).
2. Turn the water pump pulley counterclockwise. Check that it turns freely.
3. Check for signs of seal leakage. A small amount of "weeping" from the bleed holes (A) is normal.

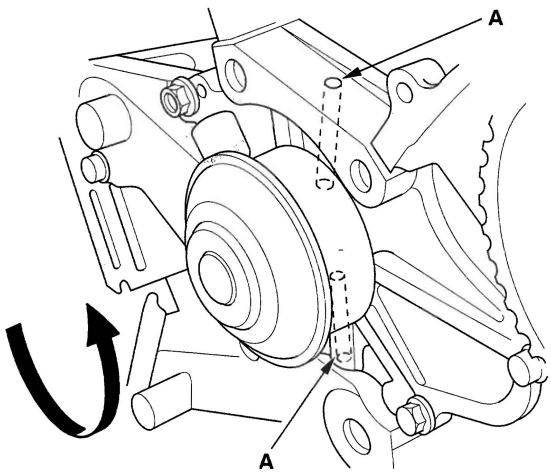

Water Pump Replacement

1. Drain the engine coolant (see page 10-6).
2. Remove the timing belt (see page 6-14).
3. Remove the timing belt adjuster (see page 6-26).
4. Remove the water pump (A) by removing the five bolts.

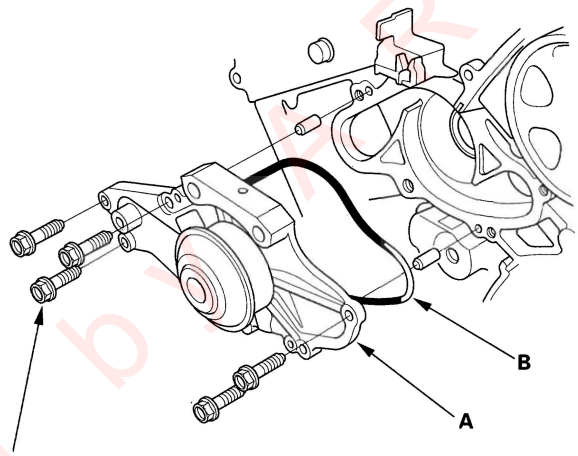

6 x 1.0 mm
12 N·m (1.2 kgf·m, 8.7 lbf·ft)

5. Inspect and clean the O-ring groove and the mating surface of the engine block.
6. Install the water pump with a new O-ring (B) in the reverse order of removal.
7. Clean up any spilled engine coolant.
8. Install the timing belt adjuster (see page 6-26).
9. Install the timing belt (see page 6-16).
10. Refill the radiator with engine coolant, then bleed the air from the cooling system (see step 8 on page 10-7).

Protected by

Coolant Check

1. Look at the coolant level in the coolant reservoir. Make sure it is between the MAX mark (A) and MIN mark (B).

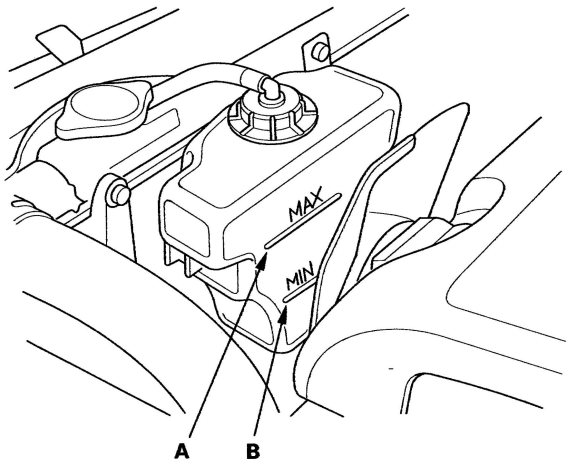

2. If the coolant level in the coolant reservoir is at or below the MIN mark, add coolant to bring it between the MIN and MAX marks, then inspect the cooling system for leaks.

Coolant Replacement

1. Start the engine. Set the heater temperature control dial to maximum heat, then turn off the ignition switch. Make sure the engine and radiator are cool to the touch.
2. Remove the radiator cap.
3. Loosen the drain plug (A), and drain the coolant.

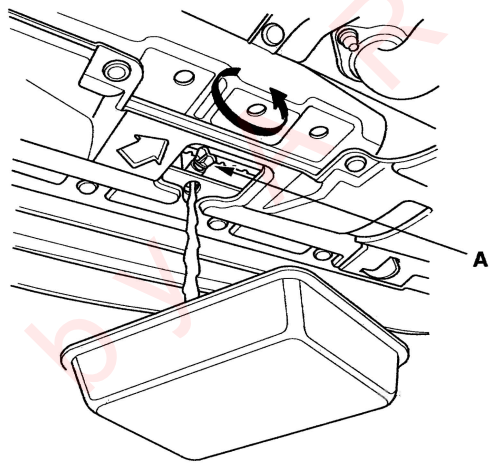

4. Install a rubber hose (A) on the drain bolt (B) located at the rear of the cylinder block, then loosen the drain bolt.

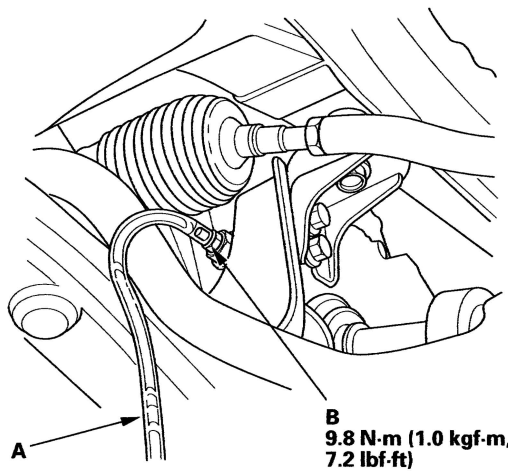

5. When the coolant stops draining, tighten the drain bolt.
6. Tighten the radiator drain plug securely.

Protected by

7. Remove, drain, and reinstall the reserve tank.

8. Fill the reserve tank to MAX mark (A) with Honda All Season Antifreeze/Coolant Type 2 (P/N OL999-9001).

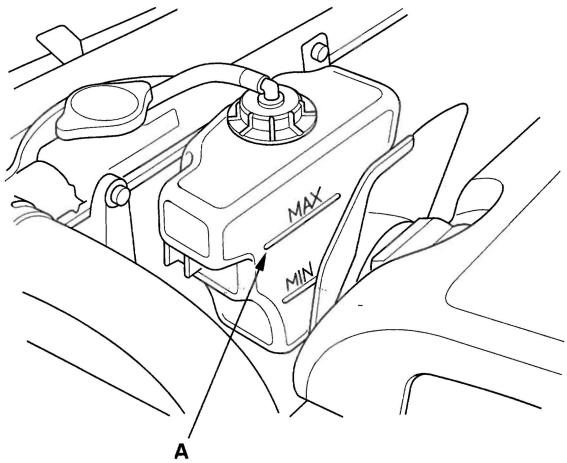

9. Pour Honda All Season Antifreeze/Coolant Type 2 into the radiator up to the base of the filler neck.

   NOTE:
   - Always use Honda All Season Antifreeze/Coolant Type 2 (P/N OL999-9001). Using a non-Honda coolant can result in corrosion, causing the cooling system to malfunction or fail.
   - Honda All Season Antifreeze/Coolant Type 2 is a mixture of 50 % antifreeze and 50 % water. Do not add water.

   Engine Coolant Refill Capacity (including the reserve tank capacity of 0.6 ℓ (0.6 US qt)):
   M/T: 6.3 ℓ (6.7 US qt)
   A/T: 6.4 ℓ (6.8 US qt)

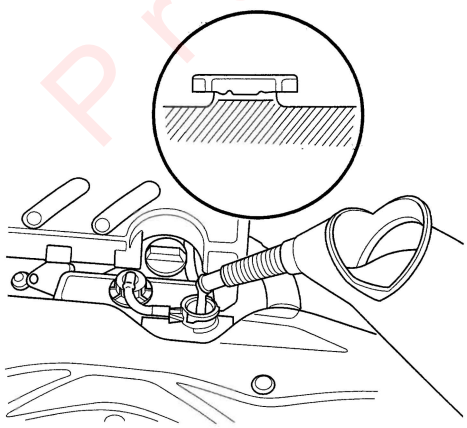

10. Install the radiator cap loosely.

11. Start the engine and let it run until it warms up (the radiator fan comes on at least twice).

12. Turn off the engine. Check the level in the radiator and add Honda All Season Antifreeze/Coolant Type 2, if needed.

13. Put the radiator cap on tightly, then run the engine again, and check for leaks.

14. Clean up any spilled engine coolant.

Protected by AR

Thermostat Replacement

1. Make sure you have the anti-theft codes for the radio and navigation system, then write down the XM radio channel presets. Make sure the ignition switch is OFF.
2. Disconnect the negative cable from the battery first, then the positive cable.
3. Remove the battery.
4. Drain the engine coolant (see page 10-6).
5. Remove the thermostat cover, then remove the thermostat.

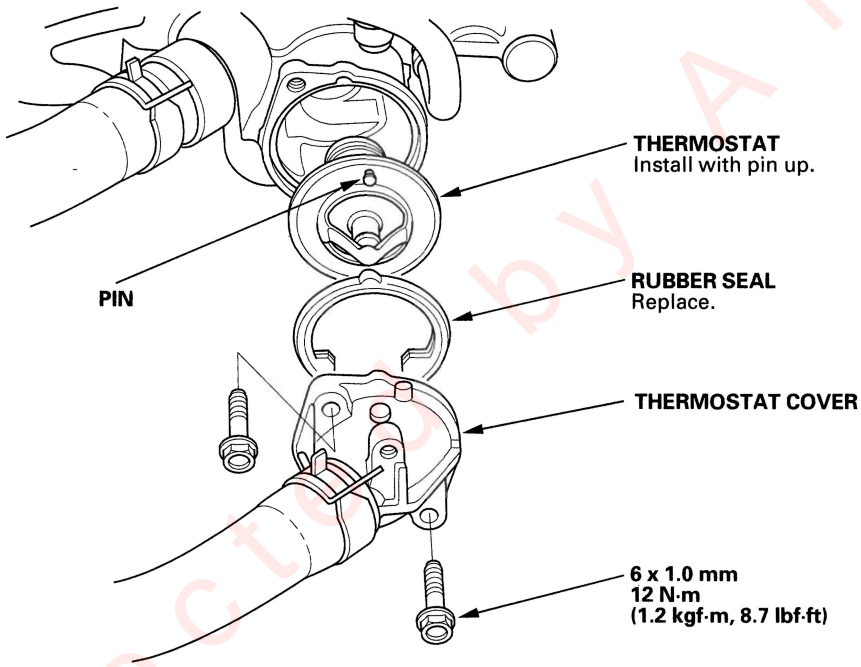

6. Install the thermostat with a new rubber seal.
7. Install the battery. Clean the battery posts and cable terminals with sandpaper, then assemble them and apply grease to prevent corrosion.
8. Refill the radiator with engine coolant, then bleed air from the cooling system (see step 8 on page 10-7).
9. Clean up any spilled engine coolant.
10. Enter the anti-theft codes for the radio and the navigation system, then enter the customer's XM radio channel presets.
11. Set the clock.

Protected by A R

Water Passage Replacement

1. Make sure you have the anti-theft codes for the radio and navigation system, then write down the XM radio channel presets. Make sure the ignition switch is OFF.
2. Disconnect the negative cable from the battery first, then the positive cable. Remove the battery.
3. Drain the engine coolant (see page 10-6).
4. Remove the vacuum hoses, breather pipe, and the intake air duct.
5. Remove the upper radiator hose, lower radiator hose, heater hoses, and water bypass hoses from the water passage. Remove the water passage.

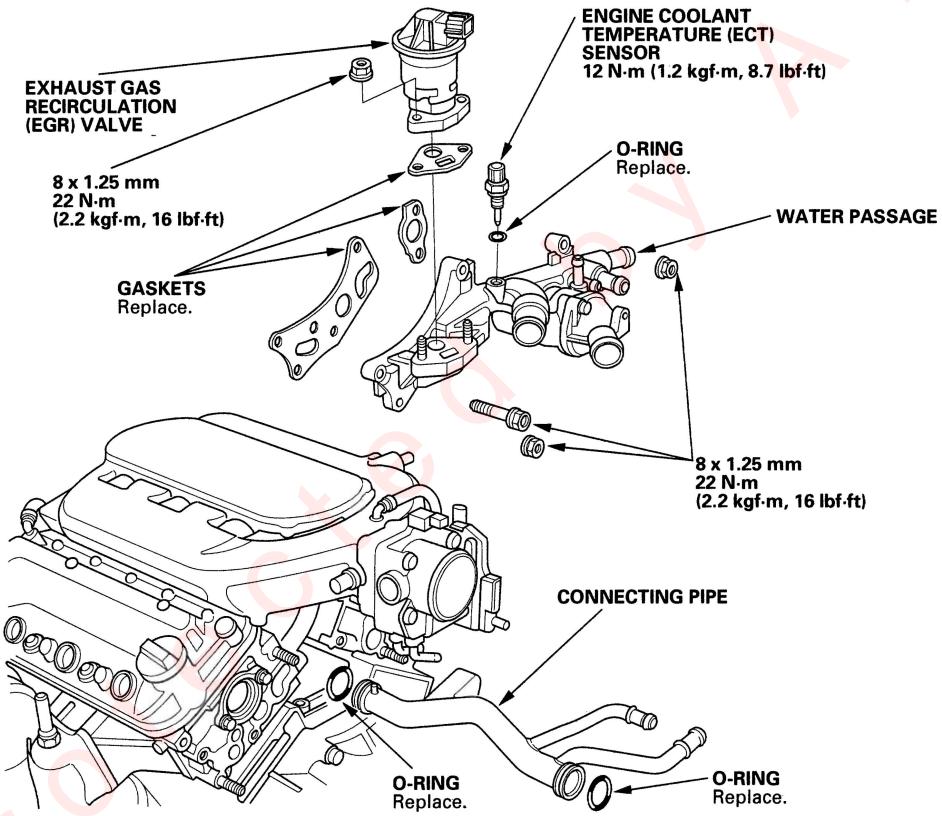

6. Install the water passage in the reverse order of removal.
7. Install the battery. Clean the battery posts and cable terminals with sandpaper, then assemble them and apply grease to prevent corrosion.
8. Refill the radiator with engine coolant, then bleed air from the cooling system (see step 8 on page 10-7).
9. Clean up any spilled engine coolant.
10. Enter the anti-theft codes for the radio and the navigation system, then enter the customer's XM radio channel presets.
11. Set the clock.

Proprietary A R

Radiator and Fan Replacement

1. Drain engine coolant (see page 10-6).
2. Remove the front bulkhead cover (see page 20-130).
3. Remove the upper radiator hose and lower radiator hose from the radiator.

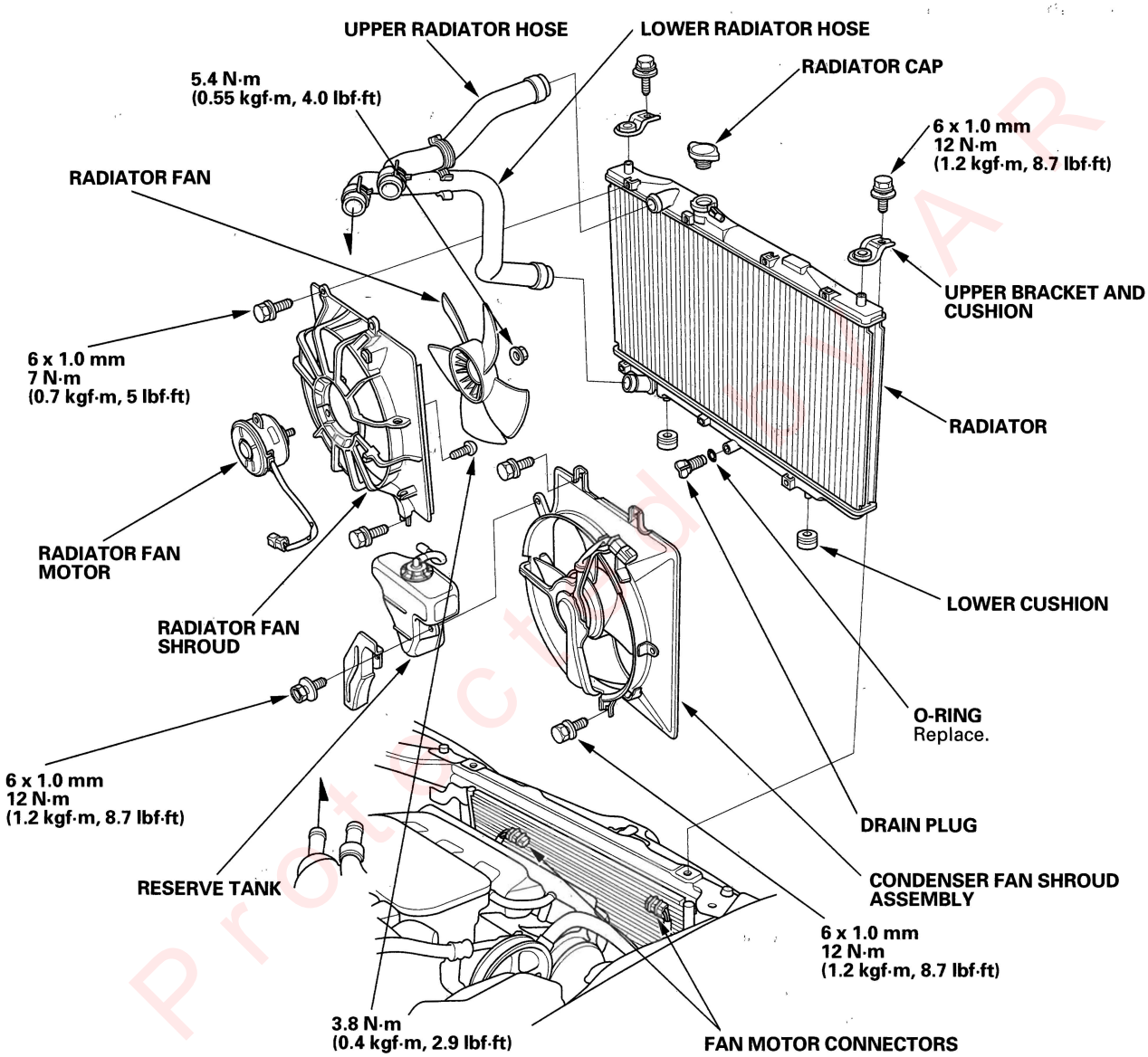

4. Disconnect the fan motor connectors.
5. Remove the upper bracket cushions, then pull up the radiator.
6. Remove the fan shroud assemblies and other parts from the radiator.
7. Install the radiator in the reverse order of removal. Make sure the upper and lower cushions are set securely.
8. Fill the radiator with engine coolant, then bleed air from the cooling system (see step 8 on page 10-7).

Protected by HAR

Component Location Index

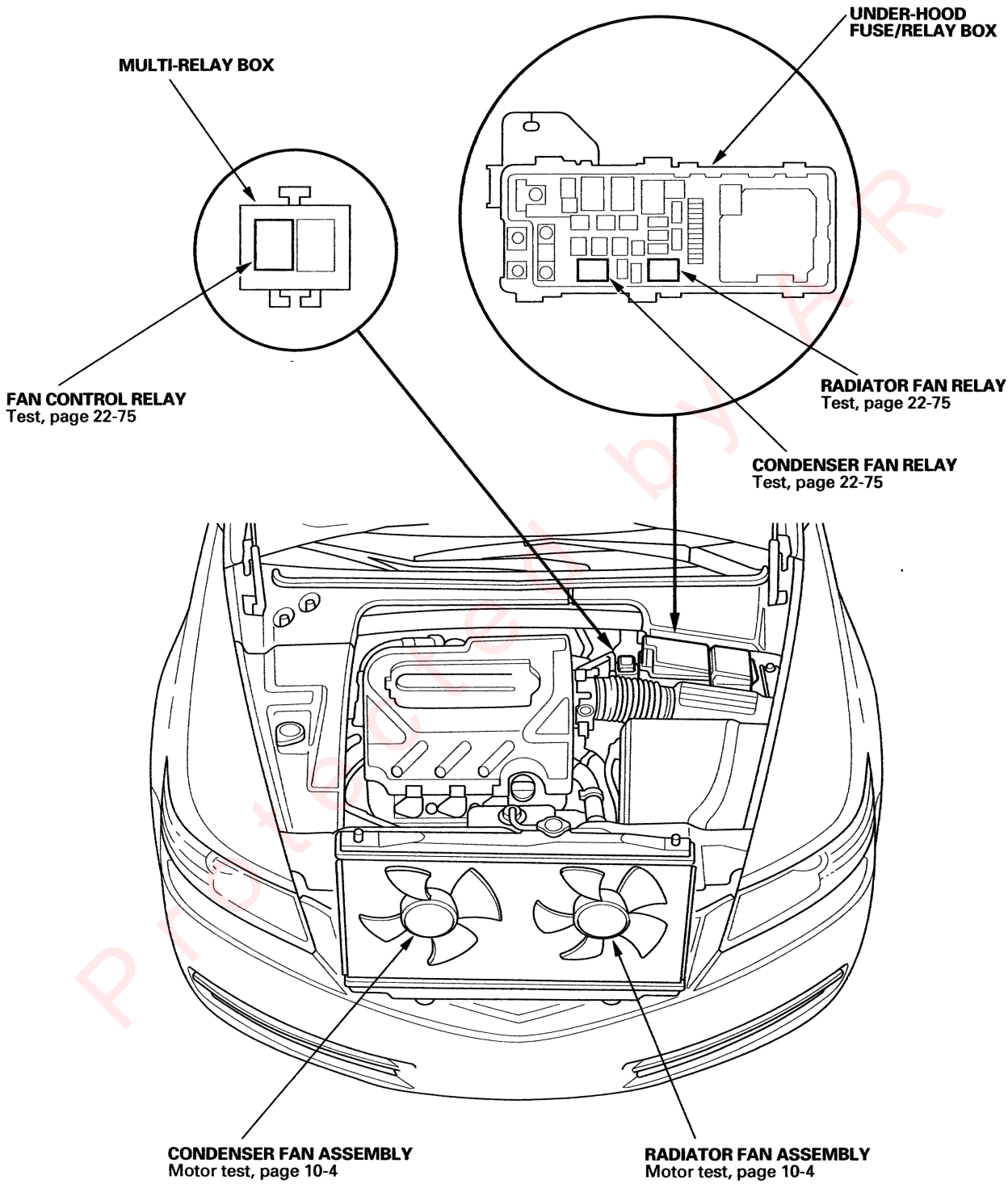

Symptom Troubleshooting Index

Symptom	Diagnostic Procedure	Also check for
Engine overheats	1. Inspect the water pump (see page 10-5). 2. Check the thermostat (see page 10-4). 3. Check for any engine coolant leakage (from gaskets, hoses, O-rings, etc.). 4. Check for dirt, leaves, or insects on radiator and condenser. 5. Check for a damaged or deformed fan shroud. 6. Check for a plugged or deteriorated radiator hoses. 7. Check the radiator cap (see page 10-3). 8. Inspect the fan motors (see page 10-4) or fan relays (see page 22-75). 9. Check for plugged heater core or hoses. 10. Check the coolant level. 11. Check for deteriorated coolant. 12. Check for a damaged cylinder head gasket.	
Radiator fan runs at low speed, but does not run at high speed when the engine coolant temperature is above 206°F (97°C)	Radiator fan high speed circuit troubleshooting (see page 10-14).	
With the A/C OFF and the engine coolant temperature at 206°F (97°C) or below, the condenser fan runs at high speed and the radiator fan does not run. When the coolant temperature is above 206°F (97°C), both fans run at high speed	Remove the fan control relay, and test. • If the relay is faulty, replace it. • If the relay is OK, repair a short in the wire between fan control relay 5P socket terminal No. 1 and condenser fan motor 2P connector terminal No. 1.	
Radiator fan and condenser fan run at high speed with the ignition switch ON (II), the A/C OFF, and engine coolant temperature below 204°F (95°C)	Repair a short in the wire between radiator fan relay 4P socket terminal No. 4 and ECM/PCM connector terminal A7.	
Radiator fan and condenser fan run at low speed with the ignition switch ON (II) and the A/C OFF	Repair a short in the wire between condenser fan relay 4P socket terminal No. 4 and ECM/PCM connector terminal A6.	
Radiator fan and condenser fan do not run at low speed with the A/C ON	Radiator and condenser fans low speed circuit troubleshooting (see page 21-52).	
Condenser fan does not run at all. Radiator fan does not run at low speed, but runs at high speed	Condenser fans high speed circuit troubleshooting (see page 21-56).	
Both condenser fan and radiator fan do not run at high speed when the engine coolant temperature is above 206°F (97°C)	Repair an open in the wire between radiator fan relay 4P socket terminal No. 4 and ECM/PCM connector terminal A7.	

Protected by AR

Circuit Diagram

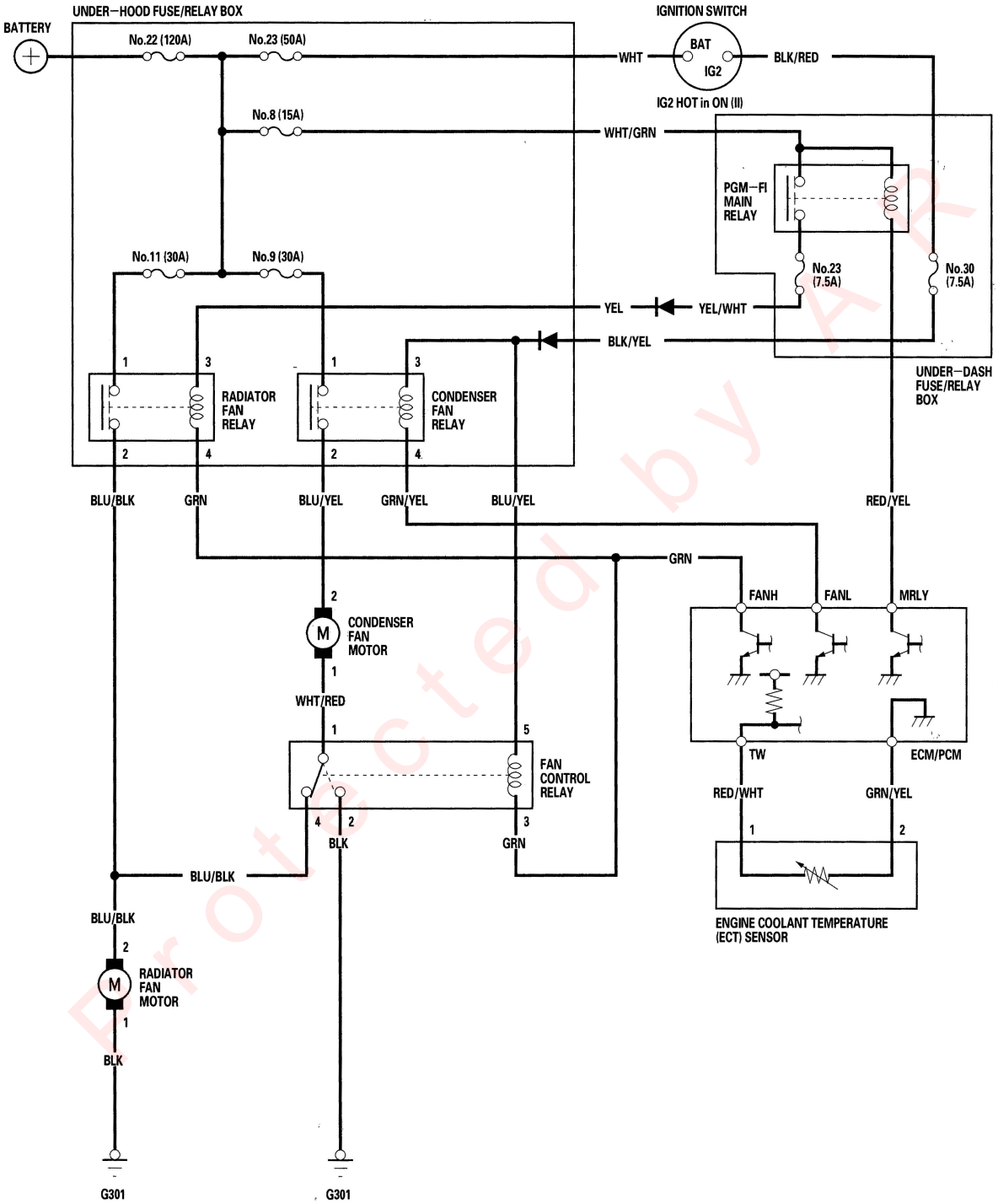

Protected by AR

Radiator Fan High Speed Circuit Troubleshooting

1. Remove the radiator fan relay from the under-hood fuse/relay box and test it (see page 22-75).

   Is the relay OK?

   YES – Go to step 2.

   NO – Replace the radiator fan relay. ■

2. Turn the ignition switch ON (II).

3. Measure the voltage between radiator fan relay 4P socket terminal No. 1 and body ground.

RADIATOR FAN RELAY 4P SOCKET

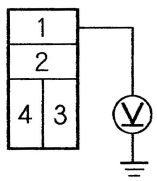

Terminal side of female terminals

Is there battery voltage?

YES – Go to step 4.

NO – Replace the under-hood fuse/relay box. ■

4. Connect radiator fan relay 4P socket terminals No. 1 and No. 2 with a jumper wire.

RADIATOR FAN RELAY 4P SOCKET

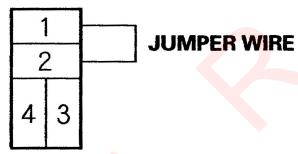

Terminal side of female terminals

Does the radiator fan run at high speed?

YES – Go to step 5.

NO – Repair an open in the wire between radiator fan relay 4P socket terminal No. 2 and radiator fan motor 2P connector terminal No. 2. ■

5. Measure voltage between radiator fan relay 4P socket terminal No. 3 and body ground.

RADIATOR FAN RELAY 4P SOCKET

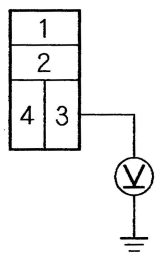

Terminal side of female terminals

Is there battery voltage?

YES – Repair an open in the wire between radiator fan relay 4P socket terminal No. 4 and the engine control module (ECM)/powertain control module (PCM). ■

NO – Repair an open in the wire between radiator fan relay 4P socket terminal No. 3 and the under-dash fuse/relay box. ■

Protected by AR

Fuel and Emissions

Fuel and Emissions Systems
Special Tools 11-2
General Troubleshooting Information 11-3
DTC Troubleshooting Index 11-8
Symptom Troubleshooting Index 11-11
System Description 11-13
How to Set Readiness Codes 11-51

PGM-FI System
Component Location Index 11-54
DTC Troubleshooting 11-56
MIL Circuit Troubleshooting 11-148
DLC Circuit Troubleshooting 11-160
Injector Replacement 11-163
A/F Sensor Replacement 11-165
Secondary HO2S Replacement 11-166
ECT Sensor Replacement 11-167
IAT Sensor Replacement 11-167
CKP Sensor Replacement 11-168
Knock Sensor Replacement 11-168
CMP Sensor Replacement 11-169
Input Shaft (Mainshaft) Speed Sensor Replacement 11-170
Output Shaft (Countershaft) Speed Sensor Replacement 11-170
ECM/PCM Replacement 11-171

Electronic Throttle Control System
Component Location Index 11-172
DTC Troubleshooting 11-173
APP Sensor Replacement 11-216
Throttle Actuator Control Module Replacement 11-216

VTEC
Component Location Index 11-217
DTC Troubleshooting 11-218
VTEC Solenoid Valve Test 11-226
VTEC Solenoid Valve Removal/Installation 11-227
VTEC Oil Pressure Switch Replacement 11-227

Idle Control System
Component Location Index 11-228
DTC Troubleshooting 11-229
A/C Signal Circuit Troubleshooting 11-232
Alternator FR Signal Circuit Troubleshooting 11-233
PSP Switch Signal Circuit Troubleshooting 11-235
Brake Pedal Position Switch Signal Circuit Troubleshooting 11-237
Idle Speed Inspection 11-238
ECM/PCM Idle Learn Procedure 11-239

Fuel Supply System
Component Location Index 11-240
Fuel Pump Circuit Troubleshooting 11-241
Fuel Pressure Relieving 11-245
Fuel Pressure Test 11-247
Fuel Tank Draining 11-248
Fuel Line Inspection 11-249
Fuel Line/Quick-Connect Fitting Precautions 11-251
Fuel Line/Quick-Connect Fitting Removal 11-252
Fuel Line/Quick-Connect Fitting Installation 11-253
Fuel Pressure Regulator Replacement 11-256
Fuel Filter Replacement 11-256
Fuel Pump/Fuel Gauge Sending Unit Replacement 11-257
Fuel Tank Replacement 11-258
Fuel Gauge Sending Unit Test 11-262
Low Fuel Indicator Test 11-263

Intake Air System
Component Location Index 11-264
DTC Troubleshooting 11-265
Throttle Body Test 11-272
Throttle Body Cleaning 11-272
Air Cleaner Removal/Installation 11-273
Air Cleaner Element Replacement 11-273
Resonator Removal/Installation 11-274
IMT Actuator Replacement 11-274
Throttle Cable Adjustment 11-275
Throttle Cable Removal/Installation 11-276
Throttle Body Removal/Installation 11-277
Throttle Body Disassembly/Reassembly 11-278

Catalytic Converter System
DTC Troubleshooting 11-279
Warm Up Three Way Catalytic Converter Removal/Installation 11-281

EGR System
Component Location Index 11-283
DTC Troubleshooting 11-284
EGR Valve Replacement 11-295

PCV System
DTC Troubleshooting 11-296
PCV Valve Inspection and Test 11-297
PCV Valve Replacement 11-297

EVAP System
Component Location Index 11-298
DTC Troubleshooting 11-299
EVAP Canister Replacement 11-324
FTP Sensor Replacement 11-325
EVAP Canister Purge Valve Replacement 11-325
EVAP Canister Vent Shut Valve Replacement 11-326



Protected

Special Tools

Ref. No.	Tool Number	Description	Qty
①	A973X-041-XXXXX	Vacuum Pump/Gauge, 0—30 in.Hg	1
②	07AAA-S0XA100	Fuel Sender Wrench	1
③	07AAJ-S6MA150	Fuel Pressure Gauge Attachment Set	1
④	07JAZ-001000B	Vacuum/Pressure Gauge, 0—4 in.Hg	1
⑤	07SAZ-001000A	Backprobe Set	2
⑥	07NAJ-P07010A	Pressure Gauge Adapter	1
⑦	07ZAJ-S5A0200	Hose, Oil Pressure	1
⑧-1	07406-0020201	A/T Pressure Hose	1
⑧-2	07406-0070300	A/T Low Pressure Gauge W/Panel	1
⑧-3	07MAJ-PY4011A	A/T Pressure Hose, 2,210 mm	1
⑧-4	07MAJ-PY40120	A/T Pressure Hose, Adapter	1
⑨	07406-004000B	Fuel Pressure Gauge	1

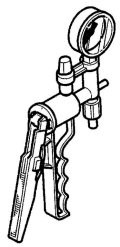

①

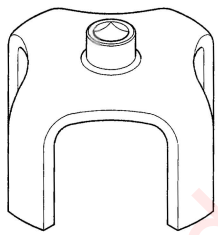

②

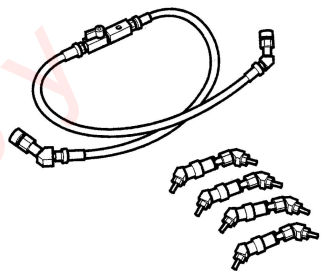

③

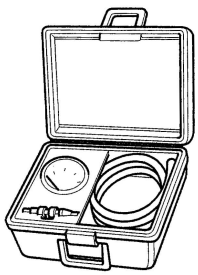

④

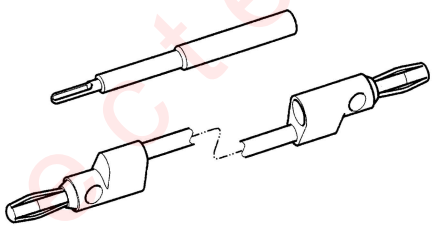

⑤

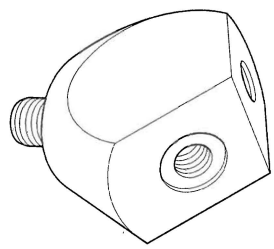

⑥

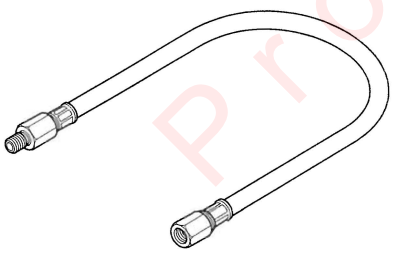

⑦

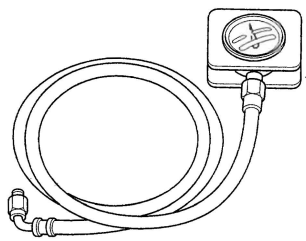

⑧-1, ⑧-2, ⑧-3, ⑧-4



⑨

Protected by AR

General Troubleshooting Information

Intermittent Failures

The term "intermittent failure" means a system may have had a failure, but it checks OK now. If the malfunction indicator lamp (MIL) on the dash does not come on, check for poor connections or loose pins at all connectors related to the circuit that you are troubleshooting. The MIL may be turned off by the ECM/PCM if the problem that originally caused the MIL to be illuminated was an intermittent problem.

Opens and Shorts

"Open" and "Short" are common electrical terms. An open is a break in a wire or at a connection. A short is an accidental connection of a wire to ground or to another wire. In simple electronics, this usually means something won't work at all. With complex electronics (such as ECMs and PCMs) this can sometimes mean something works, but not the way it's supposed to.

How to Use the HDS (Honda Diagnostic System)

If the MIL (Malfunction Indicator Lamp) has come on

1. Start the engine and check the MIL (A).

   NOTE: If the ignition switch is turned ON (II), and the engine is not started, the MIL will stay on for 15—20 seconds (see page 11-51).

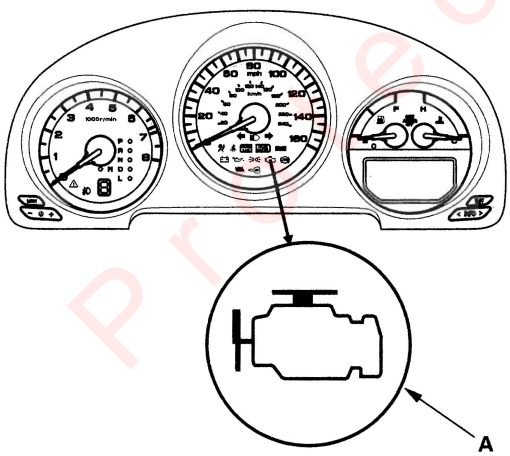

2. If the MIL stays on, connect the HDS to the data link connector (DLC) (A) located under the driver's side of the dashboard.

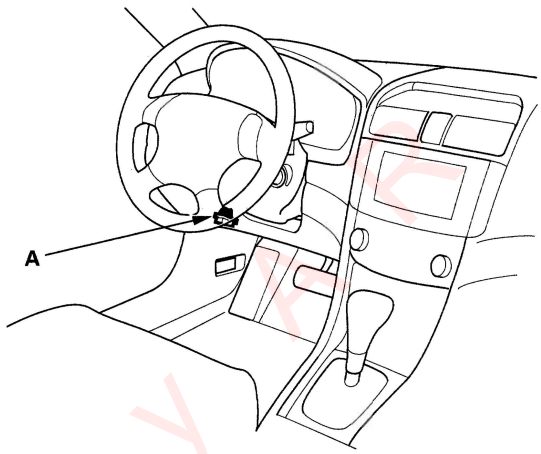

3. Turn the ignition switch ON (II).

4. Check the diagnostic trouble code (DTC) and note it, then download the onboard snapshot. Also check the freeze data. Refer to the DTC Troubleshooting Index (see page 11-8) and begin the appropriate troubleshooting procedure.

   NOTE:
   - Freeze data indicates the engine conditions when the first malfunction, misfire, or fuel trim malfunction was detected.
   - The HDS can read the DTC, freeze data, current data, and other engine control module (ECM)/ powertrain control module (PCM) data.
   - For specific operations, refer to the user's manual that came with the HDS.

5. If no DTCs are found, go to MIL troubleshooting (see page 11-148).

If the MIL did not stay on

If the MIL did not stay on but there is a driveability problem, refer to the Symptom Troubleshooting.

If you can't duplicate the DTC

Some of the troubleshooting requires you to reset the ECM/PCM and try to duplicate the DTC. If the problem is intermittent and you can't duplicate the code, do not continue through the procedure. To do so will only result in confusion, and possibly, a needlessly replaced ECM/PCM.

(cont'd)

Protected by FAR

General Troubleshooting Information (cont'd)

HDS Clear Command

The ECM/PCM stores various specific data to correct the system even when there is no electrical power such as the battery negative terminal or No. 8 FI ECU (ECM/PCM) (15A) fuse are disconnected. Stored data based on failed parts should be cleared by using the "CLEAR COMMAND" of the HDS, if parts are replaced.

The HDS has three kinds of clear commands to meet the purpose. They are DTC clear, ECM/PCM reset, and CKP pattern clear. DTC clear command erases all stored DTC codes, freeze data and readiness codes. This must be done with the HDS after reproducing the DTC during troubleshooting in this service manual.
ECM/PCM reset command erases all stored DTC codes, freeze data, readiness codes, and all specific data to correct the system except CKP pattern. If the CKP pattern data in ECM/PCM was cleared, you must do the CKP pattern learn procedure. The CKP pattern clear command erases only CKP pattern data. This command is for the repair of a misfire or CKP sensor.

DTC CLEAR

1. Clear the DTC with the HDS while the engine is stopped.
2. Turn the ignition switch OFF.
3. Turn the ignition switch ON (II). Wait for 30 seconds.
4. Turn the ignition switch OFF, and disconnect the HDS from the DLC.

ECM/PCM RESET

This command clears stored specific data from each vehicle such as DTCs freeze data, and readiness codes. It does not clear CKP PATTERN data.

1. Reset the ECM/PCM with the HDS while the engine is stopped.
2. Turn the ignition switch OFF.
3. Turn the ignition switch ON (II). Wait for 30 seconds.
4. Turn the ignition switch OFF, and disconnect the HDS from the DLC.
5. Do the ECM/PCM idle learn procedure (see page 11-239).

CKP PATTERN CLEAR/CKP Pattern Learn

NOTE: The ECT needs to be at 176°F (80°C) or higher.

1. Clear the CKP Pattern with the HDS while the engine is stopped.
2. Turn the ignition OFF.
3. Turn the ignition ON (II), and wait for 30 seconds.
4. Test-drive the vehicle on a level road: Decelerate (with the throttle fully closed) from engine speed of 2,500 rpm to 1,000 rpm with the A/T in 2 position, or the M/T in 2nd or 3rd gear.
5. Stop the vehicle. Do not turn the ignition off.
6. Select the ALL DATA LIST in the DATA LIST MENU of the HDS.
7. Check the status of PULSER F/B LEARN. If it is set to NG, the enable criteria was probably not met; repeat the procedure from the beginning.

How to End a Troubleshooting Session (required after any troubleshooting)

1. Reset the ECM/PCM with the HDS.
2. Do the ECM/PCM idle learn procedure (see page 11-239).
3. Turn the ignition switch OFF.
4. Disconnect the HDS from the DLC.

NOTE: The ECM/PCM is part of the immobilizer system. If you replace the ECM/PCM, it will have a different immobilizer code. In order for the engine to start, you must rewrite the immobililzer code with the HDS.

Protected by ARP

How to Remove the ECM/PCM for Testing

If DTC troubleshooting requires voltage or resistance checks at the ECM/PCM connectors, remove the ECM/PCM and test it.

1. Jump the SCS line with the HDS.
2. Pull back the carpet.
3. Remove the ducts (A).

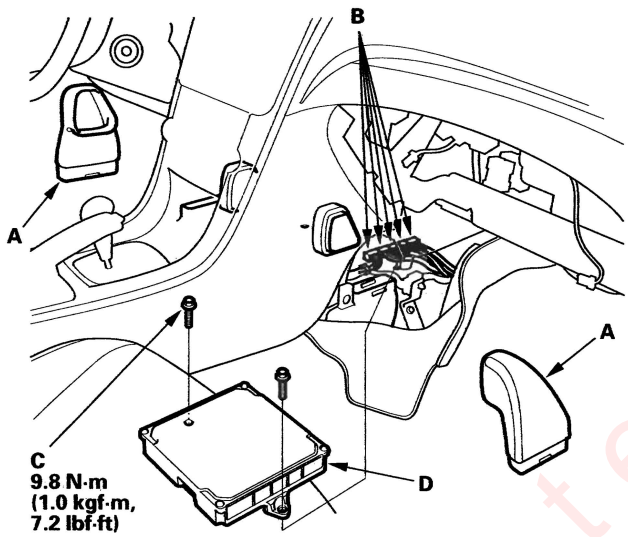

4. Disconnect the ECM/PCM connectors (B).
5. Remove the bolts (C), then remove the ECM/PCM (D).
6. Install the ECM/PCM in the reverse order of removal.
7. Open the SCS line with the HDS.

How to Troubleshoot Circuits at the ECM/PCM

Special Tools Required

- Digital Multimeter KS-AHM-32-003 (1) or a commercially available digital multimeter
- Backprobe Set 07SAZ-001000A (2)

1. Connect the backprobe adapters (A) to the stacking patch cords (B), and connect the cords to a digital multimeter.

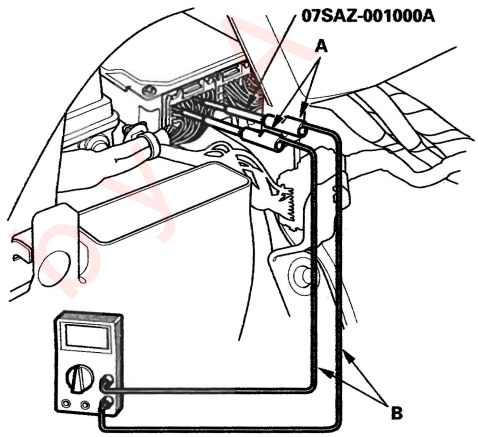

2. Using the wire insulation as a guide for the contoured tip of the backprobe adapter, gently slide the tip into the connector from the wire side until it touches the end of the wire terminal.
3. If you cannot get to the wire side of the connector or the wire side is sealed (A), disconnect the connector and probe the terminals (B) from the terminal side. Do not force the probe into the connector.

NOTICE

Do not puncture the insulation on a wire. Punctures can cause poor or intermittent electrical connections.

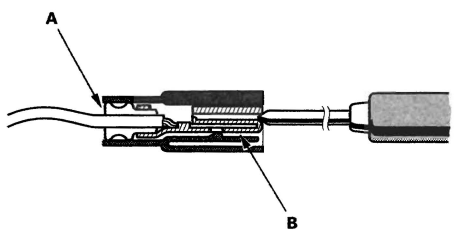

(cont'd)

Protected by A.P.

General Troubleshooting Information (cont'd)

ECM/PCM Updating and Substitution for Testing

Special Tools Required
Honda Interface Module (HIM) EQS05A35570

Use this procedure when you have to substitute a known-good ECM/PCM in a troubleshooting procedure. Update the ECM/PCM only if the ECM/PCM does not have the latest software loaded.

NOTE: Do not turn the ignition switch OFF while updating the ECM/PCM. If you turn the ignition switch OFF before completion, the ECM/PCM can be damaged.

How to Update the ECM/PCM

NOTE:
- To ensure the latest program is installed, do an ECM/PCM update whenever the ECM/PCM is substituted or replaced.
- You can not update an ECM/PCM with the program it already has. It will only accept a new program.
- Before you update the ECM/PCM, make sure the vehicle's battery is fully charged.
- To prevent ECM/PCM damage, do not operate anything electrical (audio system, brakes, A/C, power windows, moonroof, door locks, etc.) during the update.
- If you need to diagnose the Honda Interface Module (HIM) because the HIM's red (# 3) light came on or was flashing during the update, leave the ignition switch in the ON (II) position when you disconnect the HIM from the data link connector (DLC). This will prevent ECM/PCM damage.

1. Turn the ignition switch ON (II). Do not start the engine.
2. Connect the HDS or the Honda Interface Module (HIM) to the data link connector (DLC) (A) located under the driver's side of the dashboard.

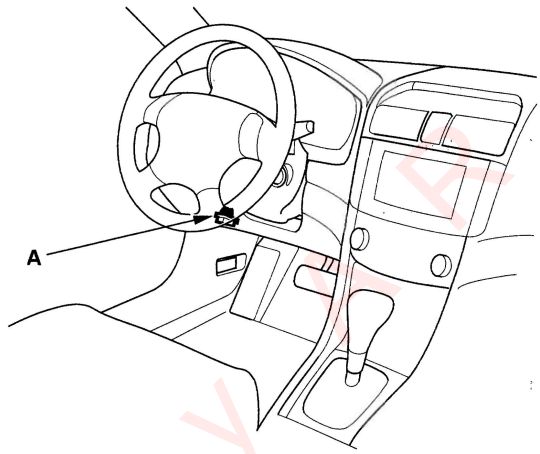

3. Do the ECM/PCM update procedure as described on the HIM label and in the ECM/PCM update system.
4. Do the ECM/PCM idle learn procedure (see page 11-239).
5. Do the CKP PATTERN Learn Procedure, if you did the troubleshooting for DTC P0300, P0301, P0302, P0303, P0304, P0305, P0306, P0335, P0339, P0340, P0344, P0385 or P0389.

Protected by

How to Substitute the ECM/PCM

1. Connect the HDS to the data link connector (DLC) (A) located under the driver's side of the dashboard.

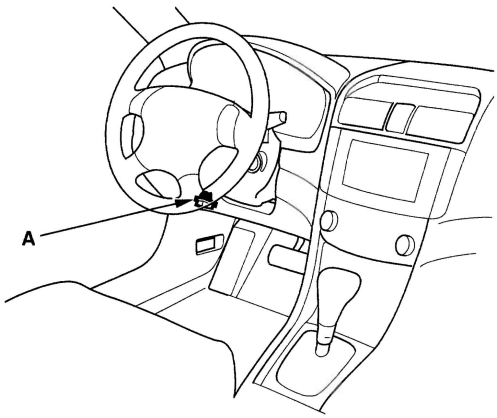

2. Turn the ignition switch ON (II).
3. Select READ DATA in the REPLACE ECM/PCM with the HDS.
4. Turn the ignition switch OFF.
5. Jump the SCS line with the HDS.
6. Pull back the carpet.
7. Remove the ducts (A).

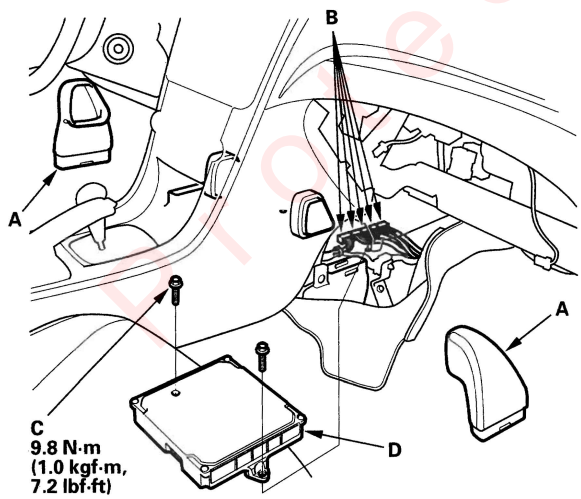

8. Disconnect the ECM/PCM connectors (B).
9. Remove the bolts (C), then remove the ECM/PCM (D).
10. Install the ECM in the reverse order of removal.
11. Open the SCS with the HDS.
12. Turn the ignition switch ON (II).

    NOTE: If DTC: P0630 "VIN Not Programmed or Mismatch" is stored at this time, ignore it and continue this procedure.

13. Input the VIN to the ECM/PCM with the HDS.
14. Select WRITE DATA in the REPLACE ECM/PCM with the HDS.
15. Rewrite the immobilizer code with the ECM/PCM replacement procedure in the HDS; it allows you to start the engine.
16. Reset the ECM/PCM with the HDS.
17. Do the Idle learn procedure (see page 11-239).
18. Do the CKP pattern learn procedure.

OBD Status

The OBD status shows the current system status of each DTC and all of the parameters. This function is used to see if the technician's repair was successfully finished. The results of diagnostic tests for the DTC are displayed as:

- PASSED: On board diagnosis is successfully finished.
- FAILED: On board diagnosis has finished but failed.
- EXECUTING: The vehicle is in enable criteria conditions for the DTC and the on board diagnosis is running.
- NOT COMPLETED: The on board diagnosis was running but is out of the enable conditions of the DTC.
- OUT OF CONDITION: The vehicle has stayed out of the enable conditions of the DTC.

Protected by AR

DTC Troubleshooting Index

DTC (MIL indication*1)	Temporary DTC	Detection Item	MIL	Note
P0107 (3)	———	Manifold Absolute Pressure (MAP) Sensor Circuit Low Voltage	ON	(see page 11-56)
P0108 (3)	———	Manifold Absolute Pressure (MAP) Sensor Circuit High Voltage	ON	(see page 11-58)
P0112 (10)	———	Intake Air Temperature (IAT) Sensor Circuit Low Voltage	ON	(see page 11-63)
P0113 (10)	———	Intake Air Temperature (IAT) Sensor Circuit High Voltage	ON	(see page 11-64)
P0116 (86)	P0116	Engine Coolant Temperature (ECT) Sensor Range/Performance Problem	ON	(see page 11-66)
P0117 (6)	———	Engine Coolant Temperature (ECT) Circuit Low Voltage	ON	(see page 11-67)
P0118 (6)	———	Engine Coolant Temperature (ECT) Circuit High Voltage	ON	(see page 11-68)
P0122 (7)	———	Throttle Position (TP) Sensor A Circuit Low Voltage	ON	(see page 11-173)
P0123 (7)	———	Throttle Position (TP) Sensor A Circuit High Voltage	ON	(see page 11-176)
P0125 (86)	P0125	Engine Coolant Temperature (ECT) Sensor Slow Response	ON	(see page 11-70)
P0128 (87)	P0128	Cooling System Malfunction	ON	(see page 11-71)
P0133 (157)	P0133	Rear Air Fuel Ratio (A/F) Sensor (Bank 1, Sensor 1) Circuit Slow Response	ON	(see page 11-73)
P0134 (151)	———	Rear Air Fuel Ratio (A/F) Sensor (Bank 1, Sensor 1) Heater System Malfunction	ON	(see page 11-74)
P0135 (151)	———	Rear Air Fuel Ratio (A/F) Sensor (Bank 1, Sensor 1) Heater Circuit Malfunction	ON	(see page 11-75)
P0137 (161)	P0137	Rear Secondary Heated Oxygen Sensor (Secondary HO2S (Bank 1, Sensor 2)) Circuit Low Voltage	ON	(see page 11-98)
P0138 (161)	P0138	Rear Secondary Heated Oxygen Sensor (Secondary HO2S (Bank 1, Sensor 2)) Circuit High Voltage	ON	(see page 11-100)
P0139 (161)	P0139	Rear Secondary Heated Oxygen Sensor (Secondary HO2S (Bank 1, Sensor 2)) Circuit Slow Response	ON	(see page 11-103)
P0141 (163)	———	Rear Secondary Heated Oxygen Sensor (Secondary HO2S (Bank 1, Sensor 2)) Heater Circuit Malfunction	ON	(see page 11-104)
P0153 (158)	P0153	Front Air Fuel Ratio (A/F) Sensor (Bank 2, Sensor 1) Circuit Slow Response	ON	(see page 11-73)
P0154 (152)	———	Front Air Fuel Ratio (A/F) Sensor (Bank 2, Sensor 1) Heater System Malfunction	ON	(see page 11-74)
P0155 (152)	———	Front Air Fuel Ratio (A/F) Sensor (Bank 2, Sensor 1) Heater Circuit Malfunction	ON	(see page 11-75)
P0157 (162)	P0157	Front Secondary Heated Oxygen Sensor (Secondary HO2S (Bank 2, Sensor 2)) Circuit Low Voltage	ON	(see page 11-98)
P0158 (162)	P0158	Front Secondary Heated Oxygen Sensor (Secondary HO2S (Bank 2, Sensor 2)) Circuit High Voltage	ON	(see page 11-100)
P0159 (162)	P0159	Front Secondary Heated Oxygen Sensor (Secondary HO2S (Bank 2, Sensor 2)) Circuit Slow Response	ON	(see page 11-103)
P0161 (164)	———	Front Secondary Heated Oxygen Sensor (Secondary HO2S (Bank 2, Sensor 2)) Heater Circuit Malfunction	ON	(see page 11-104)
P0171 (153)	P0171	Rear Bank (Bank 1) Fuel System Too Lean	ON	(see page 11-108)
P0172 (153)	P0172	Rear Bank (Bank 1) Fuel System Too Rich	ON	(see page 11-108)
P0174 (154)	P0174	Front Bank (Bank 2) Fuel System Too Lean	ON	(see page 11-108)
P0175 (154)	P0175	Front Bank (Bank 2) Fuel System Too Rich	ON	(see page 11-108)
P0222 (7)	———	Throttle Position (TP) Sensor B Circuit Low Voltage	ON	(see page 11-179)
P0223 (7)	———	Throttle Position (TP) Sensor B Circuit High Voltage	ON	(see page 11-182)
P0300 and some of P0301 (71), P0302 (72), P0303 (73), P0304 (74), P0305 (75), P0306 (76)	P0300 and some of P0301, P0302, P0303, P0304, P0305, P0306	Random Misfire Detected	ON	(see page 11-109)
P0301 (71)	P0301	No. 1 Cylinder Misfire Detected	ON	(see page 11-112)
P0302 (72)	P0302	No. 2 Cylinder Misfire Detected	ON	(see page 11-112)
P0303 (73)	P0303	No. 3 Cylinder Misfire Detected	ON	(see page 11-112)
P0304 (74)	P0304	No. 4 Cylinder Misfire Detected	ON	(see page 11-112)
P0305 (75)	P0305	No. 5 Cylinder Misfire Detected	ON	(see page 11-112)
P0306 (76)	P0306	No. 6 Cylinder Misfire Detected	ON	(see page 11-112)
P0325 (23)	———	Knock Sensor Circuit Malfunction	ON	(see page 11-120)
P0335 (4)	———	Crankshaft Position (CKP) Sensor A No Signal	ON	(see page 11-122)
P0339 (4)	———	Crankshaft Position (CKP) Sensor A Intermittent Interruption	ON	(see page 11-124)
P0340 (9)	———	Camshaft Position (CMP) Sensor No Signal	ON	(see page 11-125)
P0344 (9)	———	Camshaft Position (CMP) Sensor Intermittent Interruption	ON	(see page 11-127)
P0385 (54)	———	Crankshaft Position (CKP) Sensor B No Signal	ON	(see page 11-122)
P0389 (54)	———	Crankshaft Position (CKP) Sensor B Intermittent Interruption	ON	(see page 11-124)

* 1: These DTCs are indicated by a blinking MIL when the SCS service signal line is jumped with the HDS.

DTC (MIL indication*1)	Temporary DTC	Detection Item	MIL	Note
P0401 (80)	P0401	Exhaust Gas Recirculation (EGR) Insufficient Flow	ON	(see page 11-284)
P0404 (12)	P0404	Exhaust Gas Recirculation (EGR) Control Circuit Range/Performance Problem	ON	(see page 11-286)
P0406 (12)	———	Exhaust Gas Recirculation (EGR) Valve Position Sensor Circuit High Voltage	ON	(see page 11-289)
P0420 (165)	P0420	Rear Bank Catalyst System Efficiency Below Threshold (Bank 1)	ON	(see page 11-279)
P0430 (166)	P0430	Front Bank Catalyst System Efficiency Below Threshold (Bank 2)	ON	(see page 11-279)
P0442 (90)	P0442	Evaporative Emission (EVAP) System Small Leak Detected	ON	(see page 11-299)
P0443 (92)	———	Evaporative Emission (EVAP) Canister Purge Valve Circuit Malfunction	ON	(see page 11-302)
P0451 (91)	P0451	Fuel Tank Pressure (FTP) Sensor Range/Performance Problem	ON	(see page 11-305)
P0452 (91)	———	Fuel Tank Pressure (FTP) Sensor Circuit Low Voltage	ON	(see page 11-306)
P0453 (91)	———	Fuel Tank Pressure (FTP) Sensor Circuit High Voltage	ON	(see page 11-309)
P0456 (90)	P0456	Evaporative Emission (EVAP) System Very Small Leak Detected	ON	(see page 11-299)
P0457 (90)	P0457	Evaporative Emission (EVAP) System Leak Detected/Fuel Cap Loose or Missing	ON	(see page 11-311)
P0496 (92)	P0496	Evaporative Emission (EVAP) System High Purge Flow	ON	(see page 11-313)
P0497 (90)	P0497	Evaporative Emission (EVAP) System Low Purge Flow	ON	(see page 11-314)
P0498 (117)	———	Evaporative Emission (EVAP) Canister Vent Shut Valve Control Circuit Low Voltage	ON	(see page 11-317)
P0499 (117)	———	Evaporative Emission (EVAP) Canister Vent Shut Valve Control Circuit High Voltage	ON	(see page 11-320)
P0506 (14)	P0506	Idle Control System RPM Lower than Expected	ON	(see page 11-229)
P0507 (14)	P0507	Idle Control System RPM Higher than Expected	ON	(see page 11-231)
P0563 (34)	———	Engine Control Module (ECM)/Powertrain Control Module (PCM) Power Source Circuit Unexpected Voltage	OFF	(see page 11-128)
P0603 (131)	———	ECM/PCM Internal Control Module Keep Alive Memory (KAM) Error	ON	(see page 11-132)
P0630 (139)	———	VIN Not Programmed or Mismatch	ON	(see page 11-131)
P0685 (135)	P0685	ECM/PCM Power Control Circuit Malfunction	ON	(see page 11-132)
P0700 (70)*2,*3	———	Automatic Transaxle System Malfunction	ON	Refer to the Automatic Transmission DTC Troubleshooting Index
P0700 (—)*3	———	Automatic Transaxle System Malfunction	OFF	Refer to the Automatic Transmission DTC Troubleshooting Index
P0715 (123)*4	———	Input Shaft (Mainshaft) Speed Sensor Circuit Malfunction (M/T)	OFF	(see page 11-133)
P0720 (122)*4	———	Output Shaft (Countershaft) Speed Sensor Circuit Malfunction (M/T)	ON	(see page 11-135)
P1077 (106)	P1077	Intake Manifold Tuning (IMT) Valve Stuck Short	ON	(see page 11-265)
P1078 (106)	P1078	Intake Manifold Tuning (IMT) Valve Stuck Long	ON	(see page 11-268)
P1128 (5)	P1128	Manifold Absolute Pressure (MAP) Sensor Signal Lower Than Expected	ON	(see page 11-60)
P1129 (5)	P1129	Manifold Absolute Pressure (MAP) Sensor Signal Higher Than Expected	ON	(see page 11-61)
P1297 (20)	———	Electric Load Detector (ELD) Circuit Low Voltage	OFF	(see page 11-138)
P1298 (20)	———	Electric Load Detector (ELD) Circuit High Voltage	OFF	(see page 11-140)
P1454 (91)	P1454	Fuel Tank Pressure (FTP) Sensor Range/Performance Problem	ON	(see page 11-321)
P1683 (40)	———	Throttle Valve Default Position Spring Performance Problem	ON	(see page 11-199)
P1684 (40)	———	Throttle Valve Return Spring Performance Problem	ON	(see page 11-200)
P2101 (40)	———	Throttle Actuator System Malfunction	ON	(see page 11-201)
P2108 (40)	———	Throttle Actuator Control Module Problem	ON	(see page 11-203)
P2118 (40)	———	Throttle Actuator Current Range/Performance Problem	ON	(see page 11-204)
P2122 (37)	———	Accelerator Pedal Position (APP) Sensor A (Throttle Position Sensor D) Circuit Low Voltage	ON	(see page 11-187)
P2123 (37)	———	Accelerator Pedal Position (APP) Sensor A (Throttle Position Sensor D) Circuit High Voltage	ON	(see page 11-190)
P2127 (37)	———	Accelerator Pedal Position (APP) Sensor B (Throttle Position Sensor E) Circuit Low Voltage	ON	(see page 11-192)
P2128 (37)	———	Accelerator Pedal Position (APP) Sensor B (Throttle Position Sensor E) Circuit High Voltage	ON	(see page 11-195)
P2135 (7)	———	Throttle Position (TP) Sensor A/B Voltage Incorrect Correlation	ON	(see page 11-185)
P2138 (37)	———	Accelerator Pedal Position (APP) Sensor A/B (Throttle Position Sensor D/E) Incorrect Voltage Correlation	ON	(see page 11-197)

* 1: These DTCs are indicated by a blinking MIL when the SCS service signal line is jumped with the HDS.
* 2: The D indicator and the MIL may come on simultaneously.
* 3: A/T
* 4: M/T

(cont'd)

DTC Troubleshooting Index (cont'd)

DTC (MIL indication*1)	Temporary DTC	Detection Item	MIL	Note
P2176 (40)	———	Throttle Actuator Control System Idle Position Not Learned	ON	(see page 11-205)
P2195 (155)	———	Rear Air Fuel Ratio (A/F) Sensor (Bank 1, Sensor 1) Signal Stuck Lean	ON	(see page 11-79)
P2197 (156)	———	Front Air Fuel Ratio (A/F) Sensor (Bank 2, Sensor 1) Signal Stuck Lean	ON	(see page 11-79)
P2227 (13)	P2227	Barometric Pressure (BARO) Sensor Circuit Range/Performance Problem	ON	(see page 11-142)
P2228 (13)	———	Barometric Pressure (BARO) Sensor Circuit Low Voltage	ON	(see page 11-143)
P2229 (13)	———	Barometric Pressure (BARO) Sensor Circuit High Voltage	ON	(see page 11-143)
P2237 (155)	———	Rear Air Fuel Ratio (A/F) Sensor (Bank 1, Sensor 1) IP Line High Voltage	ON	(see page 11-80)
P2238 (155)	———	Rear Air Fuel Ratio (A/F) Sensor (Bank 1, Sensor 1) IP Line Low Voltage	ON	(see page 11-82)
P2240 (156)	———	Front Air Fuel Ratio (A/F) Sensor (Bank 2, Sensor 1) IP Line High Voltage	ON	(see page 11-80)
P2241 (156)	———	Front Air Fuel Ratio (A/F) Sensor (Bank 2, Sensor 1) IP Line Low Voltage	ON	(see page 11-82)
P2243 (155)	———	Rear Air Fuel Ratio (A/F) Sensor (Bank 1, Sensor 1) VCENT Line High Voltage	ON	(see page 11-84)
P2245 (155)	———	Rear Air Fuel Ratio (A/F) Sensor (Bank 1, Sensor 1) VCENT Line Low Voltage	ON	(see page 11-86)
P2247 (156)	———	Front Air Fuel Ratio (A/F) Sensor (Bank 2, Sensor 1) VCENT Line High Voltage	ON	(see page 11-84)
P2249 (156)	———	Front Air Fuel Ratio (A/F) Sensor (Bank 2, Sensor 1) VCENT Line Low Voltage	ON	(see page 11-86)
P2251 (155)	———	Rear Air Fuel Ratio (A/F) Sensor (Bank 1, Sensor 1) VS Line High Voltage	ON	(see page 11-88)
P2252 (155)	———	Rear Air Fuel Ratio (A/F) Sensor (Bank 1, Sensor 1) VS Line Low Voltage	ON	(see page 11-90)
P2254 (156)	———	Front Air Fuel Ratio (A/F) Sensor (Bank 2, Sensor 1) VS Line High Voltage	ON	(see page 11-88)
P2255 (156)	———	Front Air Fuel Ratio (A/F) Sensor (Bank 2, Sensor 1) VS Line Low Voltage	ON	(see page 11-90)
P2279 (109)	P2279	Intake Air System Leak	ON	(see page 11-296)
P2413 (12)	P2413	Exhaust Gas Recirculation (EGR) System Malfunction	ON	(see page 11-290)
P2422 (117)	P2422	Evaporative Emission (EVAP) Canister Vent Shut Valve Stuck Closed Malfunction	ON	(see page 11-322)
P2552 (40)	———	Throttle Actuator Control Module Relay Malfunction	ON	(see page 11-207)
P2627 (155)	———	Rear Air Fuel Ratio (A/F) Sensor (Bank 1, Sensor 1) LABEL Circuit Low Voltage	ON	(see page 11-92)
P2628 (155)	———	Rear Air Fuel Ratio (A/F) Sensor (Bank 1, Sensor 1) LABEL Circuit High Voltage	ON	(see page 11-94)
P2630 (156)	———	Front Air Fuel Ratio (A/F) Sensor (Bank 2, Sensor 1) LABEL Circuit Low Voltage	ON	(see page 11-92)
P2631 (156)	———	Front Air Fuel Ratio (A/F) Sensor (Bank 2, Sensor 1) LABEL Circuit High Voltage	ON	(see page 11-94)
P2646 (22)	———	VTEC Oil Pressure Switch Circuit Low Voltage	ON	(see page 11-218)
P2647 (22)	———	VTEC Oil Pressure Switch Circuit High Voltage	ON	(see page 11-220)
P2648 (21)	———	VTEC Solenoid Valve Circuit Low Voltage	ON	(see page 11-222)
P2649 (21)	———	VTEC Solenoid Valve Circuit High Voltage	ON	(see page 11-224)
P2A00 (157)	———	Rear A/F Sensor Circuit Range/Performance Problem (Bank 1, Sensor 1)	ON	(see page 11-96)
P2A03 (158)	———	Front A/F Sensor Circuit Range/Performance Problem (Bank 2, Sensor 1)	ON	(see page 11-96)
U0073 (126)	———	F-CAN Malfunction (BUS-OFF)	OFF	(see page 11-144)
U0107 (30)	———	Lost Communication With Throttle Actuator Control Module	ON	(see page 11-209)
U0122 (126)	———	F-CAN Malfunction (VSA-ECM/PCM)	OFF	(see page 11-146)
U0155 (126)	———	F-CAN Malfunction (Gauge Control Module-ECM/PCM)	OFF	(see page 11-144)

* 1: These DTCs are indicated by a blinking MIL when the SCS service signal line is jumped with the HDS.

Protected by A

Symptom Troubleshooting Index

When the vehicle has one of these symptoms, check for a diagnostic trouble code (DTC) with the scan tool. If there is no DTC, do the diagnostic procedure for the symptom, in the sequence listed, until you find the cause.

Symptom	Diagnostic procedure	Also check for
Engine will not start (MIL works OK, no DTCs set)	1. Test the battery (see page 22-74). 2. Test the starter (see page 4-6). 3. Check the fuel pressure (see page 11-247). 4. Troubleshoot the fuel pump circuit (see page 11-241).	• Low compression • No ignition spark • Intake air leaks • Locked up engine • Broken cam chain • Contaminated fuel
Engine will not start (MIL comes on and stays on, or never comes on at all, no DTCs set)	Troubleshoot the MIL circuit (see page 11-148).	
Engine will not start (immobilizer indicator stays on or flashes)	Troubleshoot the immobilizer system (see page 22-325).	
Hard starting (MIL works OK, no DTCs set)	1. Test the battery (see page 22-74). 2. Check the fuel pressure (see page 11-247). 3. Test the throttle body (see page 11-272).	• Low compression • Intake air leaks • Contaminated fuel • Weak spark
Cold fast idle too low (MIL works OK, no DTCs set)	1. Do the ECM/PCM idle learn procedure (see page 11-239). 2. Check the idle speed (see page 11-238).	
Cold fast idle too high (MIL works OK, no DTCs set)	1. Do the ECM/PCM idle learn procedure (see page 11-239). 2. Check the idle speed (see page 11-238). 3. Inspect/adjust the throttle cable (see page 11-275). 4. Test the throttle body (see page 11-272).	
Idle speed fluctuates (MIL works OK, no DTCs set)	1. Do the ECM/PCM idle learn procedure (see page 11-239). 2. Check the idle speed (see page 11-238). 3. Inspect/adjust the throttle cable (see page 11-275). 4. Test the throttle body (see page 11-272).	Intake vacuum leaks
After warming up, idle speed is below specification with no load (MIL works OK, no DTCs set)	1. Troubleshoot the alternator FR signal circuit (see page 11-233). 2. Test the throttle body (see page 11-272).	
After warming up, idle speed is above specification with no load (MIL works OK, no DTCs set)	1. Inspect/adjust the throttle cable (see page 11-275). 2. Troubleshoot the alternator FR signal circuit (see page 11-233).	
Low power (MIL works OK, no DTCs set)	1. Check the fuel pressure (see page 11-247). 2. Inspect/adjust the throttle cable (see page 11-275).	• Low compression • Incorrect camshaft timing • Incorrect engine oil level
Engine stalls (MIL works OK, no DTCs set)	1. Do the ECM/PCM idle learn procedure (see page 11-239). 2. Check the fuel pressure (see page 11-247). 3. Check the idle speed (see page 11-238). 4. Troubleshoot the brake pedal position switch signal circuit (see page 11-237).	• Intake air leaks • Faulty harness and sensor connections

(cont'd)

Protected by A

Symptom Troubleshooting Index (cont'd)

Symptom	Diagnostic procedure	Also check for
Difficult to refuel (MIL works OK, no DTCs set)	1. Check the fuel vent tube between the EVAP canister and the fuel tank. 2. Check the fuel tank vapor recirculation tube between the fuel pipe and the fuel tank. 3. Replace the fuel tank (see page 11-258).	Malfunctioning gas station filling nozzle.
Fuel overflows during refueling (No DTCs set)	Replace the fuel tank (see page 11-258).	Malfunctioning gas station filling nozzle.

Protected by A R

System Description

Electronic Control System

The functions of the fuel and emission control systems are managed by the engine control module (ECM) on vehicles with manual transmissions or the powertrain control module (PCM) on vehicles with automatic transmissions.

Fail-safe Function
When an abnormality occurs in the signal from a sensor, the ECM/PCM ignores that signal and assumes a pre-programmed value for the sensor that allows the engine to continue to run.

Back-up Function
When an abnormality occurs in the ECM/PCM, the injectors are controlled by a back-up circuit independent of the system to permit minimal driving.

Self-diagnosis
When an abnormality occurs in the signal from a sensor, the ECM/PCM supplies ground for the malfunction indicator lamp (MIL) and stores the diagnostic trouble code (DTC) in erasable memory. When the ignition is first turned on, the ECM/PCM supplies ground to the MIL for 15 to 20 seconds to check the MIL bulb condition. If all readiness codes are not set, the MIL will flash five times. If readiness codes are set to complete, the MIL will go out. The MIL may be turned off by the ECM/PCM if the problem that originally caused the MIL to be illuminated was an intermittent problem.

Two Driving Cycle Detection Method
To prevent false indications, the "two driving cycle detection method" is used for some self-diagnostic functions. When an abnormality occurs, the ECM/PCM stores it in its memory. When the same abnormality recurs after the ignition switch is turned OFF and ON (II) again, the ECM/PCM turns on the MIL.

Self Shut Down Mode (SSD)
After the ignition switch is turned off, the ECM/PCM stays ON (up to 15 minutes).
If the ECM/PCM connector is disconnected during this mode, the ECM/PCM may be damaged.
To cancel this mode, disconnect the negative cable from the battery or jump the SCS line with the HDS after the key is turned off.

Protected by AR

(cont'd)

System Description (cont'd)

ECM/PCM Electrical Connections

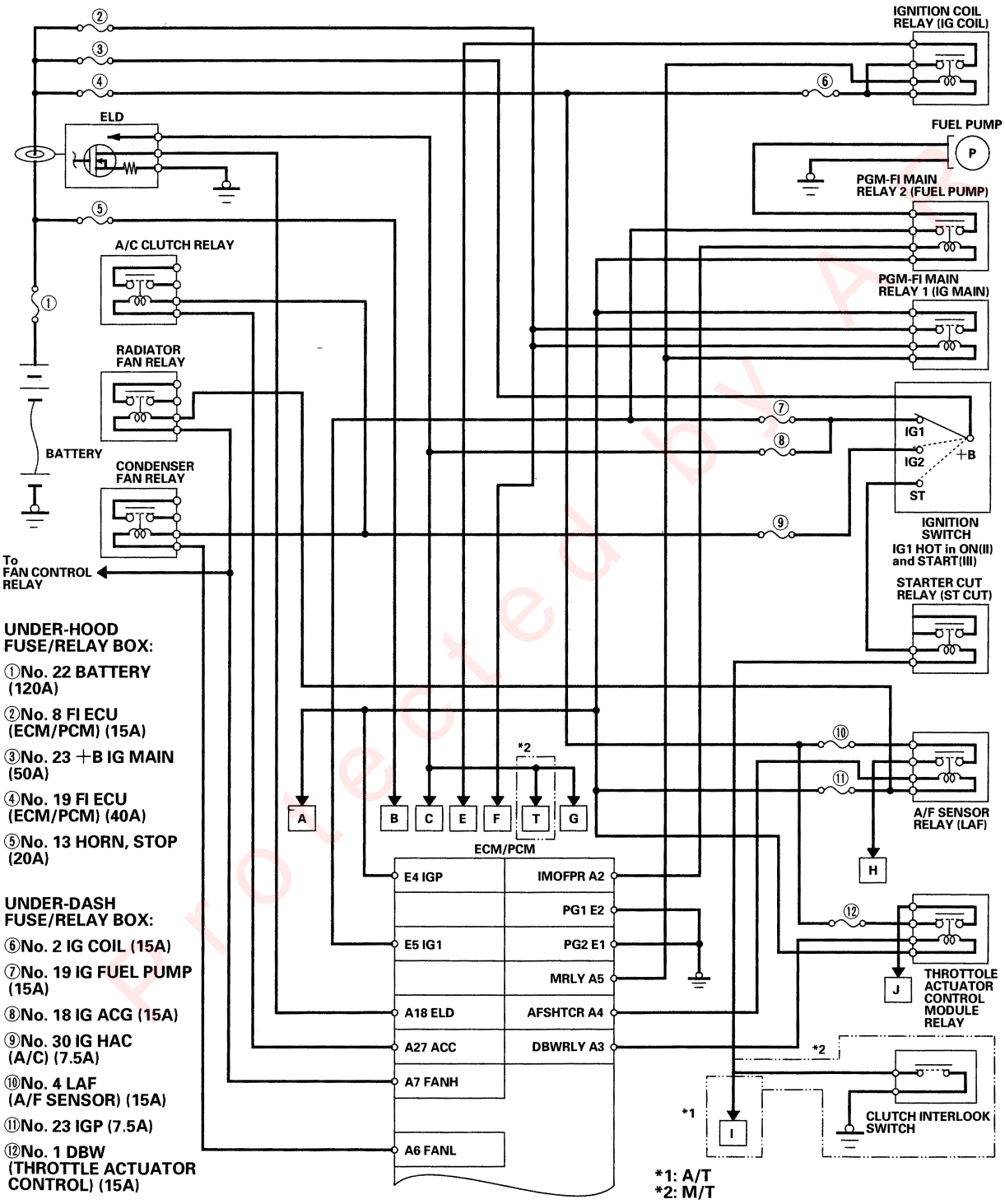

UNDER-HOOD FUSE/RELAY BOX:

①No. 22 BATTERY (120A)
②No. 8 FI ECU (ECM/PCM) (15A)
③No. 23 +B IG MAIN (50A)
④No. 19 FI ECU (ECM/PCM) (40A)
⑤No. 13 HORN, STOP (20A)

UNDER-DASH FUSE/RELAY BOX:

⑥No. 2 IG COIL (15A)
⑦No. 19 IG FUEL PUMP (15A)
⑧No. 18 IG ACG (15A)
⑨No. 30 IG HAC (A/C) (7.5A)
⑩No. 4 LAF (A/F SENSOR) (15A)
⑪No. 23 IGP (7.5A)
⑫No. 1 DBW (THROTTLE ACTUATOR CONTROL) (15A)

Protected by AM

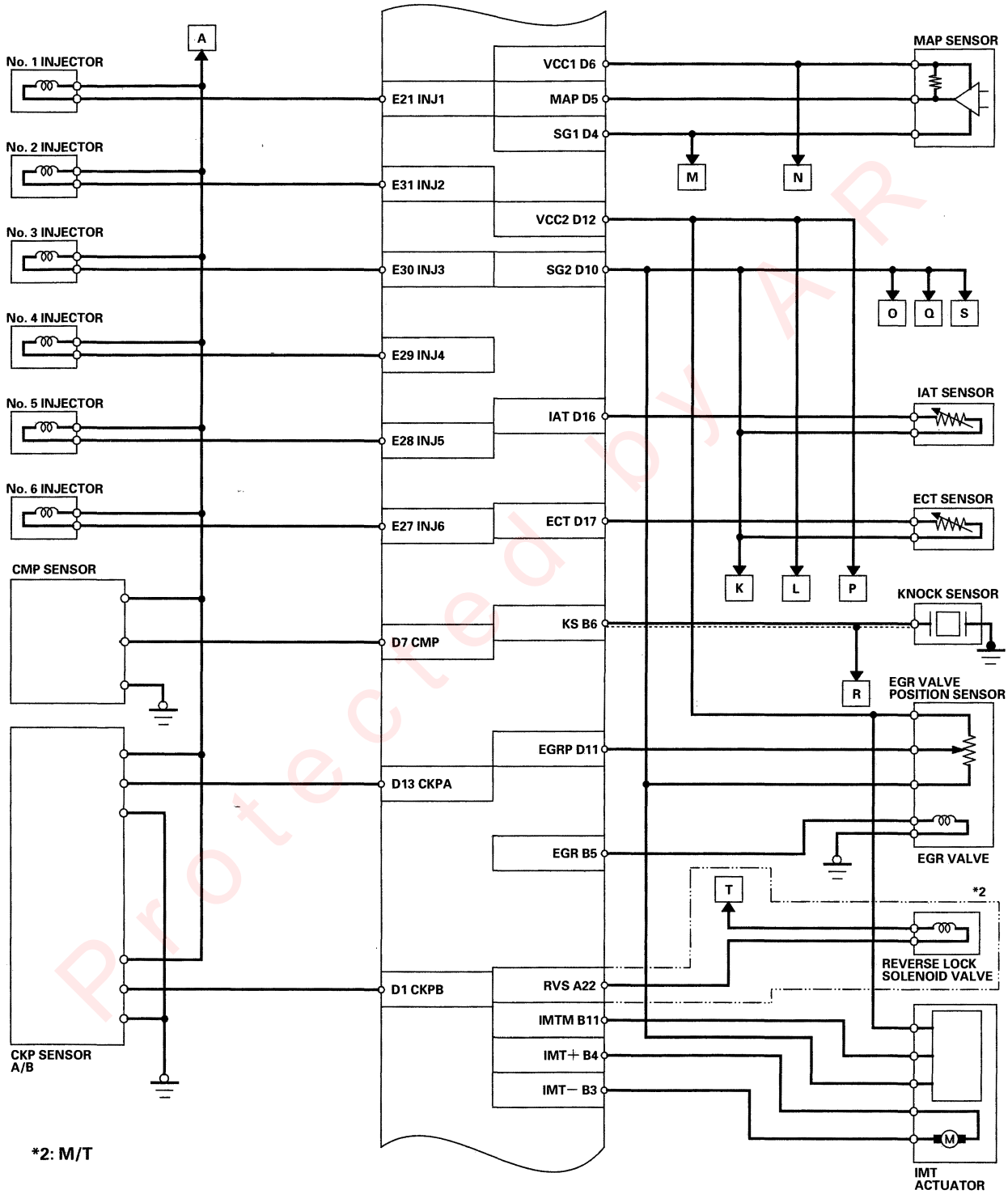

Protected by AR

(cont'd)

System Description (cont'd)

ECM/PCM Electrical Connections (cont'd)

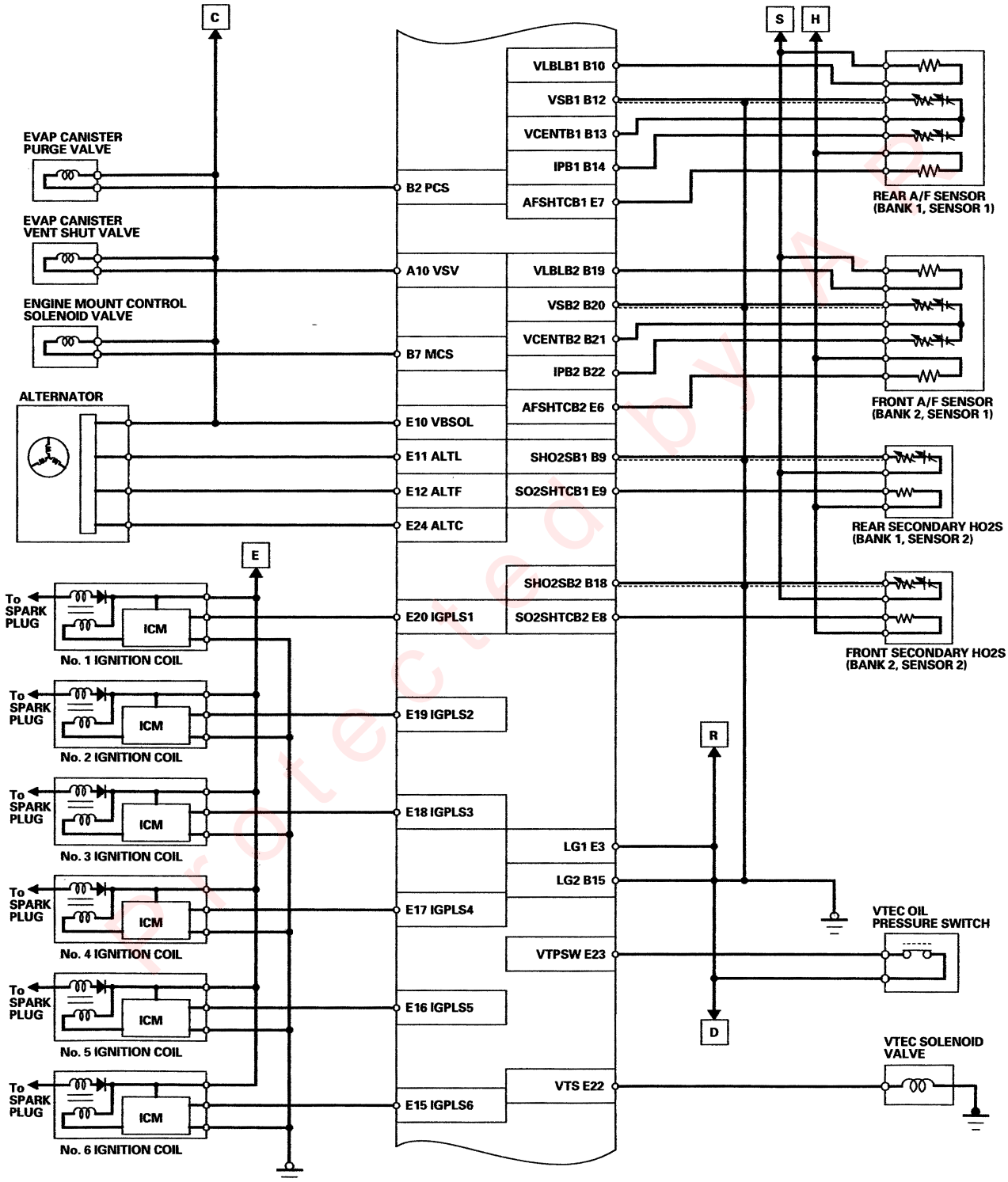

Protected by

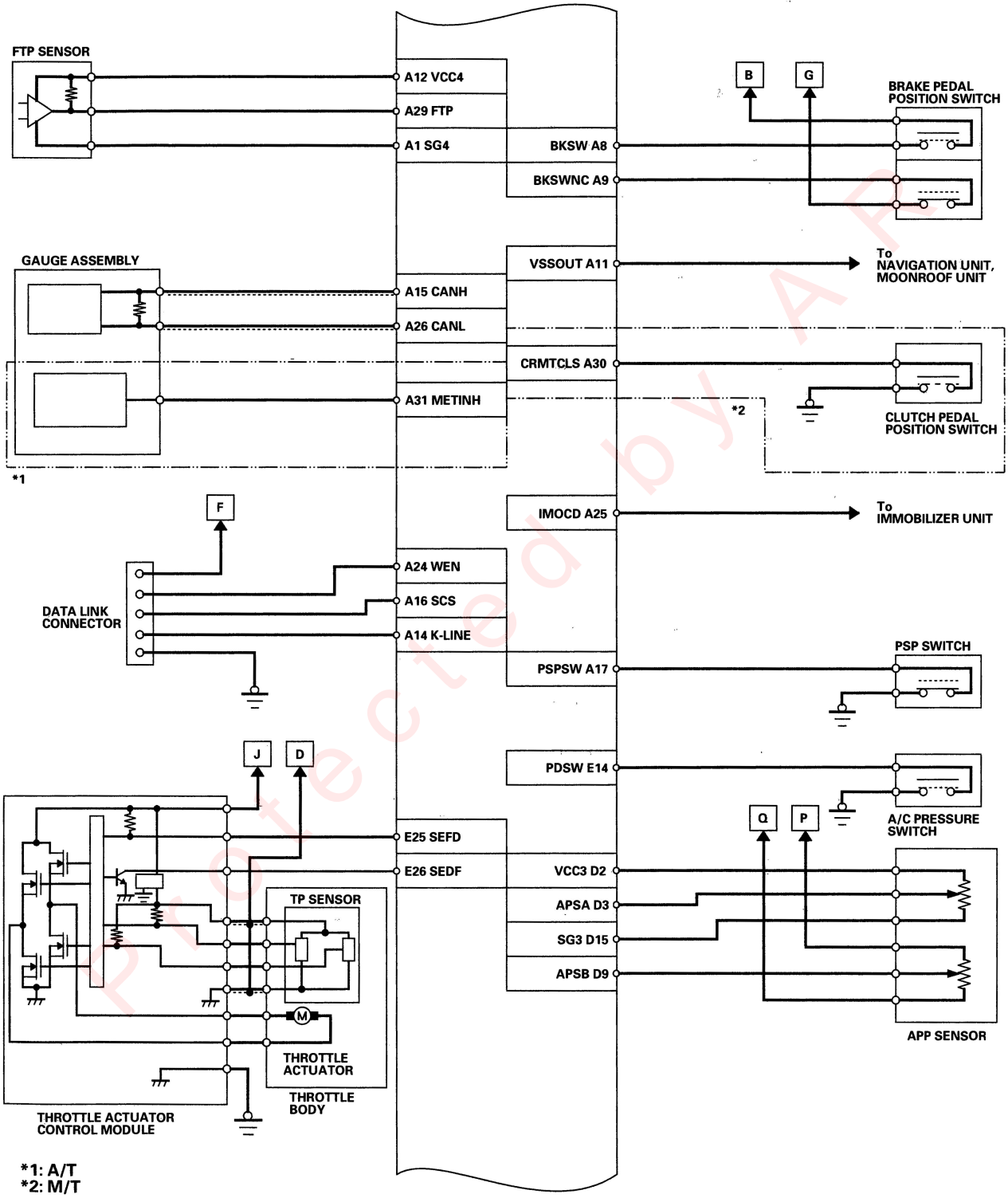

Protected by A F

(cont'd)

System Description (cont'd)

ECM/PCM Electrical Connections (cont'd)

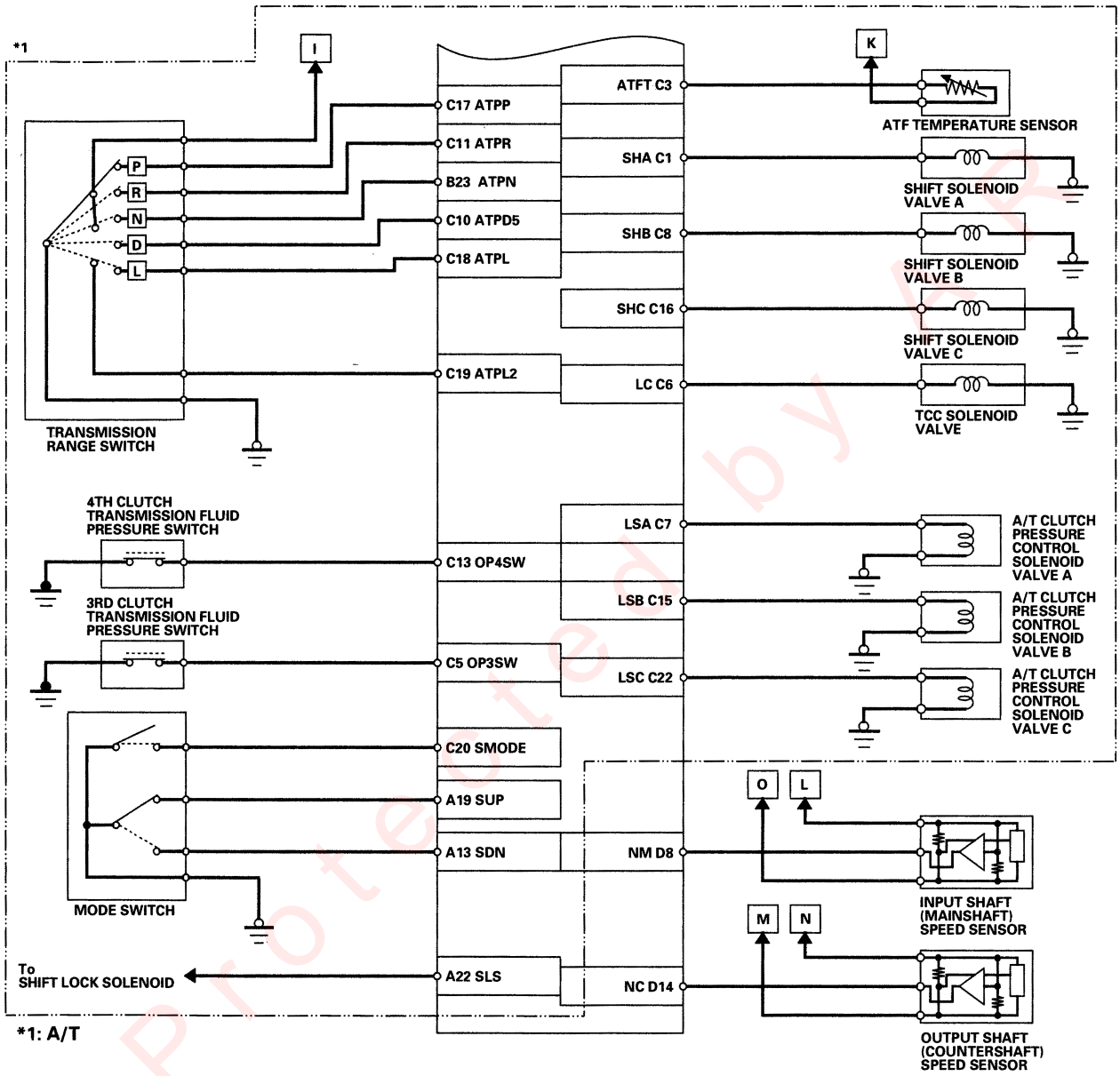

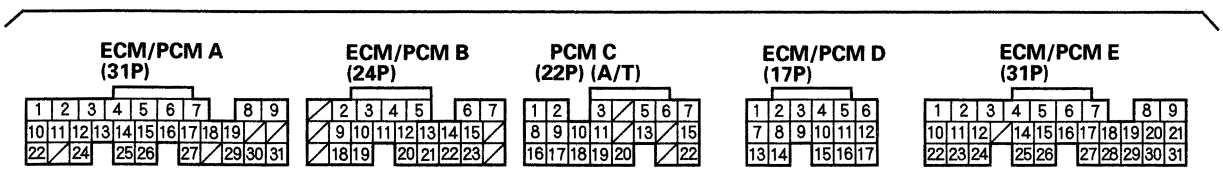

TERMINAL LOCATIONS

Protected by

Vacuum Hose Routing

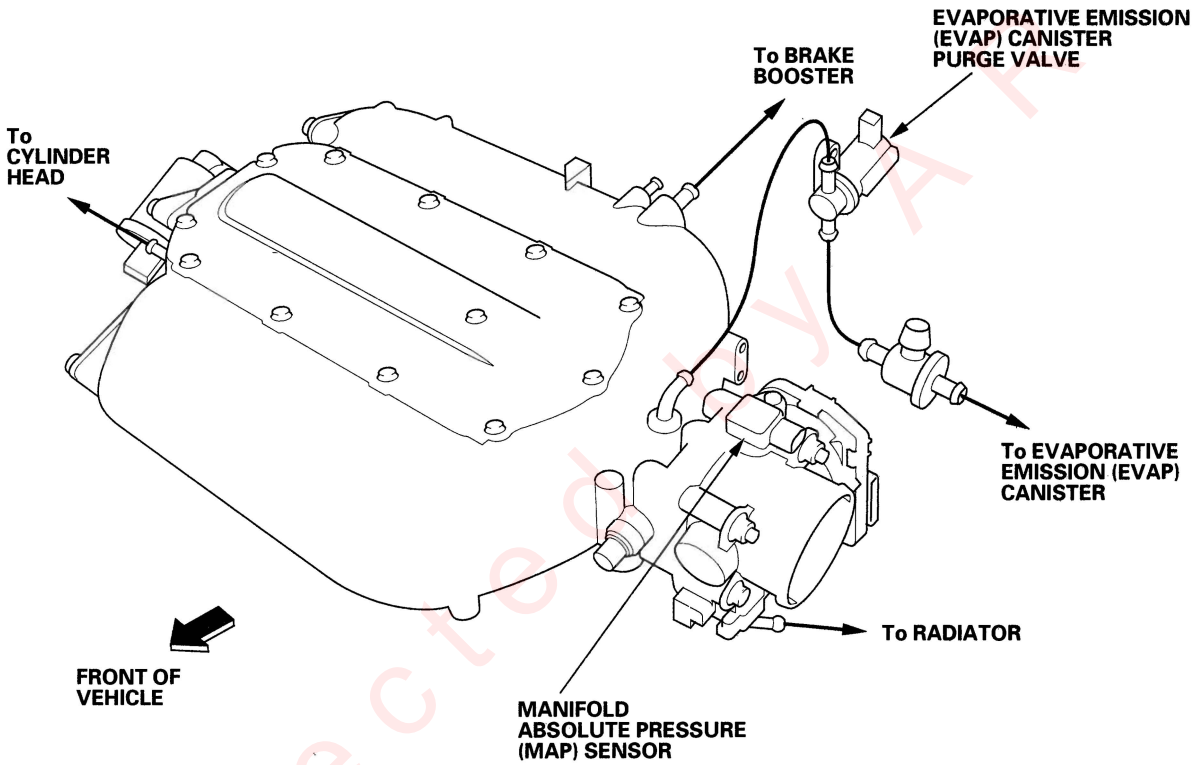

Protected by A P

(cont'd)

System Description (cont'd)

Vacuum Distribution

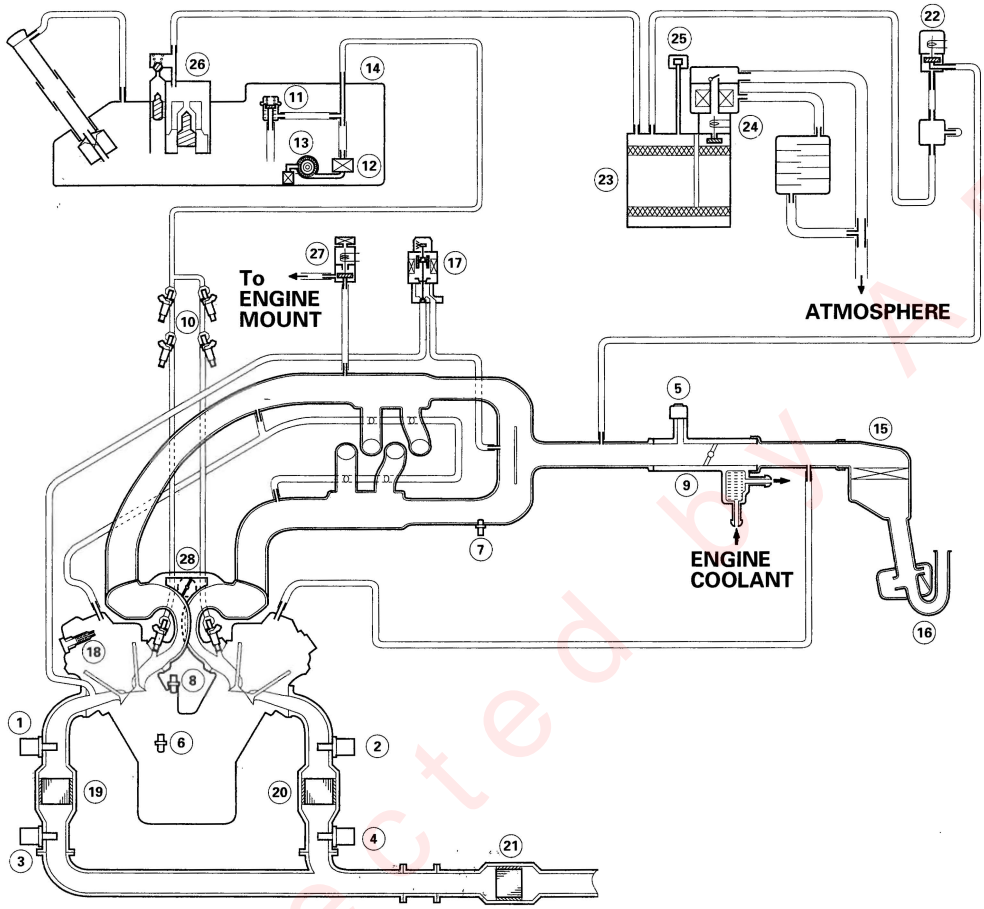

① FRONT AIR FUEL RATIO (A/F) SENSOR (BANK 2, SENSOR 1)
② REAR AIR FUEL RATIO (A/F) SENSOR (BANK 1, SENSOR 1)
③ FRONT SECONDARY HEATED OXYGEN SENSOR (SECONDARY HO2S) (BANK 2, SENSOR 2)
④ REAR SECONDARY HEATED OXYGEN SENSOR (SECONDARY HO2S) (BANK 1, SENSOR 2)
⑤ MANIFOLD ABSOLUTE PRESSURE (MAP) SENSOR
⑥ ENGINE COOLANT TEMPERATURE (ECT) SENSOR
⑦ INTAKE AIR TEMPERATURE (IAT) SENSOR
⑧ KNOCK SENSOR
⑨ THROTTLE BODY
⑩ INJECTOR
⑪ FUEL PRESSURE REGULATOR
⑫ FUEL FILTER
⑬ FUEL PUMP
⑭ FUEL TANK
⑮ AIR CLEANER
⑯ RESONATOR
⑰ EXHAUST GAS RECIRCULATION (EGR) VALVE and POSITION SENSOR
⑱ POSITIVE CRANKCASE VENTILATION (PCV) VALVE
⑲ FRONT WARM UP THREE WAY CATALYTIC CONVERTER
⑳ REAR WARM UP THREE WAY CATALYTIC CONVERTER
㉑ THREE WAY CATALYTIC CONVERTER
㉒ EVAPORATIVE EMISSION (EVAP) CANISTER PURGE VALVE
㉓ EVAPORATIVE EMISSION (EVAP) CANISTER
㉔ EVAPORATIVE EMISSION (EVAP) CANISTER VENT SHUT VALVE
㉕ FUEL TANK PRESSURE (FTP) SENSOR
㉖ FUEL TANK VAPOR CONTROL VALVE
㉗ ENGINE MOUNT CONTROL SOLENOID VALVE
㉘ INTAKE MANIFOLD TUNING (IMT) VALVE

Protected by AR

ECM/PCM Inputs and Outputs at Connector A (31P)

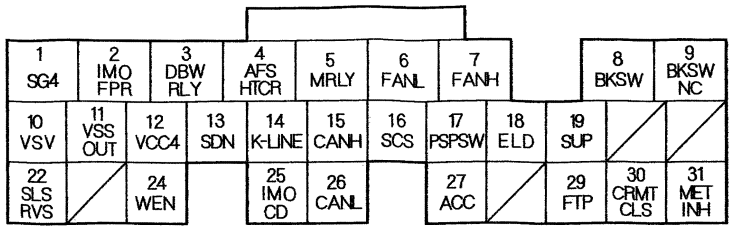

Wire side of female terminals

NOTE: Standard battery voltage is 12 V.

Terminal number	Wire color	Terminal name	Description	Signal
1	GRN/BLK	SG4 (SENSOR GROUND)	Sensor ground	Less than 1.0 V at all times
2	GRN/WHT	IMOFPR (IMMOBILIZER FUEL PUMP RELAY)	Drives PGM-FI main relay 2 (FUEL PUMP)	0 V for 2 seconds after turning ignition switch ON (II), then battery voltage
3	WHT/RED	DBWRLY (THROTTLE ACTUATOR CONTROL MODULE (DBW) RELAY)	Drives throttle actuator control module (DBW) relay	With ignition switch ON (II): 0 V
4	ORN	AFSHTCR (AIR FUEL RATIO (A/F) SENSOR RELAY)	Drives A/F sensor relay	With ignition switch ON (II): 0 V
5	RED/YEL	MRLY (PGM-FI MAIN RELAY)	Drives PGM-FI main relay 1 (FI MAIN) Power source for the DTC memory	With ignition switch ON (II): 0 V
6	GRN/YEL	FANL (RADIATOR FAN RELAY LOW)	Drives condenser fan relay	With ignition switch ON (II): battery voltage
7	GRN	FANH (RADIATOR FAN RELAY, FAN CONTROL RELAY HIGH)	Drives radiator fan relay, fan control relay	With ignition switch ON (II): battery voltage
8	WHT/BLK	BKSW (BRAKE PEDAL POSITION SWITCH)	Detects brake pedal position switch signal	With brake pedal released: about 0 V With brake pedal pressed: battery voltage
9	BRN/YEL	BKSWNC (BRAKE PEDAL POSITION SWITCH)	Detects brake pedal position switch signal	With ignition switch ON (II) and brake pedal released: battery voltage With ignition switch ON (II) and brake pedal pressed: about 0 V
10	LT GRN/RED	VSV (EVAPORATIVE EMISSION (EVAP) CANISTER VENT SHUT VALVE)	Drives EVAP canister vent shut valve	With ignition switch ON (II): battery voltage
11	BLU/WHT	VSSOUT (VEHICLE SPEED SENSOR OUTPUT SIGNAL)	Sends vehicle speed sensor signal	Depending on vehicle speed: pulses
12	YEL/WHT	VSS4 (SENSOR VOLTAGE)	Provides sensor voltage	With ignition switch ON (II): about 5 V
13*1	WHT/BLU	SDN (DOWN SHIFT SWITCH)	Detects downshift switch signal	In M position and shift lever pushed toward downshift position: 0 V In M position and shift lever in neutral position: battery voltage

* 1: A/T

Protected by AR

(cont'd)

System Description (cont'd)

ECM/PCM Inputs and Outputs at Connector A (31P)

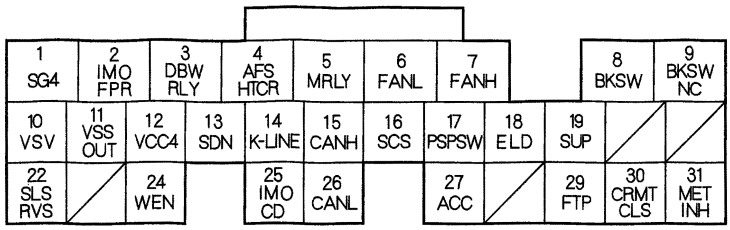

Wire side of female terminals

NOTE: Standard battery voltage is 12 V.

Terminal number	Wire color	Terminal name	Description	Signal
14	LT BLU	K-LINE	Sends and receives scan tool signal	With ignition switch ON (II): about 2.5 V
15	WHT	CANH (CAN COMMUNICATION SIGNAL HIGH)	Sends communication signal	With ignition switch ON (II): pulses
16	BRN	SCS (SERVICE CHECK SIGNAL)	Detects service check signal	With the service check signal shorted with the HDS: about 0 V With the service check signal opened: about 5 V
17	BLU/YEL	PSPSW (POWER STEERING PRESSURE SWITCH SIGNAL)	Detects PSP switch signal	At idle with steering wheel in straight ahead position: about 0 V At idle with steering wheel at full lock: battery voltage
18	BLU/BLK	ELD (ELECTRICAL LOAD DETECTOR (ELD))	Detects ELD signal	With ignition switch ON (II): about 0.1 – 4.8 V (depending on electrical load)
19*1	BRN/WHT	SUP (UP SHIFT SWITCH)	Detects upshift switch signal	In M position and shift lever pushed toward upshift position: 0 V In M position and shift lever in neutral position: about 12 V
22*1	YEL/BLK	SLS (SHIFT LOCK SOLENOID)	Drives shift lock solenoid	With ignition switch ON (II), in the Park, brake pedal pressed, and accelerator released: 0 V
22*2	WHT	RVS (REVERSE LOCK SOLENOID VALVE)	Drives reverse lock solenoid valve	With vehicle speed below 9 mph (15 km/h): battery voltage With vehicle speed above 13 mph (20 km/h): about 0 V
24	RED/WHT	WEN (WRITE ENABLE SIGNAL)	Detects write enable signal	With ignition switch ON (II): about 0 V
25	RED/BLU	IMOCD (IMMOBILIZER CODE)	Detects immobilizer signal	
26	RED	CANL (CAN COMMUNICATION SIGNAL LOW)	Sends communication signal	With ignition switch ON (II): pulses
27	RED	ACC (A/C CLUTCH RELAY)	Drives A/C clutch relay	With compressor ON: about 0 V With compressor OFF: battery voltage
29	LT GRN	FTP (FUEL TANK PRESSURE (FTP) SENSOR)	Detects FTP sensor signal	With ignition switch ON (II) and fuel fill cap open: about 2.5 V
30*2	LT BLU	CRMTCLS (CRUISE CLUTCH PEDAL POSITION SIGNAL)	Detects clutch pedal position switch signal	With ignition switch ON (II) and clutch pedal released: about 0 V With ignition switch ON (II) and clutch pedal released: battery voltage
31*1	LT GRN/RED	METINH (METER DISPLAY INHIBIT SIGNAL)	Send inhibit signal	With ignition switch ON (II): about 10 V

* 1: A/T
* 2: M/T

Protected by AR

ECM/PCM Inputs and Outputs at Connector B (24P)

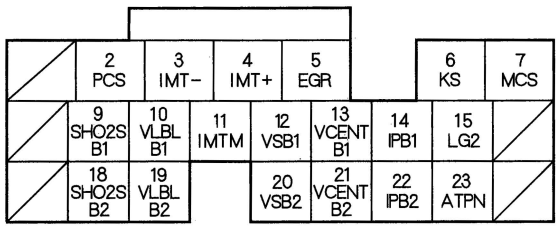

Wire side of female terminals

NOTE: Standard battery voltage is 12 V.

Terminal number	Wire color	Terminal name	Description	Signal
2	RED/YEL	PCS (EVAPORATIVE EMISSION (EVAP) CANISTER PURGE VALVE)	Drives EVAP canister purge valve	With engine running, engine coolant below 149°F (65°C): battery voltage With engine running, engine coolant above 149°F (65°C): duty controlled
3	WHT/RED	IMT − (INTAKE MANIFOLD TUNING (IMT) ACTUATOR −SIDE)	Ground for IMT actuator	With ignition switch ON (II): battery voltage
4	WHT/BLU	IMT + (INTAKE MANIFOLD TUNING (IMT) ACTUATOR +SIDE)	Drives IMT actuator	With ignition switch ON (II): battery voltage With engine speed above 4,000 rpm: 0 V
5	BLU/RED	EGR (EXHAUST GAS RECIRCULATION (EGR) VALVE)	Drives EGR valve	With EGR operating: duty controlled With EGR not operating: about 0 V
6	RED/BLU	KS (KNOCK SENSOR)	Detects knock sensor signal	With engine knocking: pulses
7	BLU/YEL	MCS (ENGINE MOUNT CONTROL SOLENOID VALVE)	Drives engine mount control solenoid valve	At idle: about 0 V Above idle: battery voltage
9	GRN	SHO2S B1 (SECONDARY HEATED OXYGEN SENSOR (SECONDARY HO2S) BANK 1, SENSOR 2)	Detects rear secondary HO2S (Bank 1, sensor 2) signal	With throttle fully opened from idle with fully warmed up engine: above 0.6 V With throttle quickly closed: below 0.4 V
10	WHT	VLBL B1 (LABEL RESISTER BANK 1)	Detects rear A/F sensor (Bank 1, sensor 1) LABEL signal	With engine running: 0.4 − 4.6 V

Protected by AR

(cont'd)

System Description (cont'd)

ECM/PCM Inputs and Outputs at Connector B (24P)

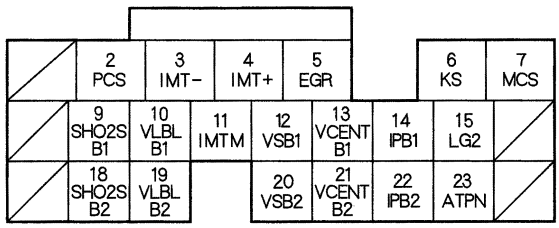

Wire side of female terminals

NOTE: Standard battery voltage is 12 V.

Terminal number	Wire color	Terminal name	Description	Signal
11	WHT/BLK	IMTM (INTAKE MANIFOLD TUNING (IMT) VALVE MOONITOR)	Detects IMT valve position	With ignition switch ON (II): about 0 V With engine speed above 4,000 rpm: about 5 V
12	BLU	VSB1 (VS CELL+ BANK 1)	Detects the rear A/F sensor (Bank 1,sensor 1) VS CELL signal	With engine running: 3.4−4.8 V
13	RED	VCENTB1 (VIRTUAL GROUND BANK 1)	Reference voltage supply for rear A/F sensor (Bank 1, sensor 1)	With fully warmed up engine at idle: 3.4−3.8 V
14	GRN	IPB1 (IP CELL+ BANK 1)	Detects rear A/F sensor (Bank 1, sensor 1) pump cell	With engine running: 2.0−5.6 V
15	BRN/YEL	LG2 (LOGIC GROUND)	Ground circuit for the PCM	Less than 1.0 V at all times
18	WHT	SHO2S B2 (SECONDARY HEATED OXYGEN SENSOR (SECONDARY HO2S) BANK 2, SENSOR 2)	Detects front secondary HO2S (Bank 2, sensor 2) signal	With throttle fully opened from idle with fully warmed up engine: above 0.6 V With throttle quickly closed: below 0.4 V
19	WHT/RED	VLBLB2 (LABEL RESISTER BANK 2)	Detects front A/F (Bank 2, sensor 1) LABEL signal	With engine running: 0.4−4.6 V
20	RED/BLU	VSB2 (VS CELL+ BANK 2)	Detects front A/F sensor (Bank 2, sensor 1) VS CELL signal	With engine running with fully warmed up engine: 3.4−4.8 V
21	RED/WHT	VCENTB2 (VIRTUAL GROUND BANK 2)	Reference voltage supply for front A/F sensor (Bank 2, sensor 1)	With fully warmed up engine at idle: 3.4−4.8 V
22	GRN/RED	IPB2 (IP CELL+ BANK 2)	Detects front A/F sensor (Bank 2, sensor 1) pump cell	With engine running: 2.0−5.6 V
23*1	RED/BLK	ATPN (TRANSMISSION RANGE SWITCH NEUTRAL)	Detects transmission range switch Neutral signal	In Neutral: 0 V In any other position: battery voltage

* 1: A/T

Protected by AR

PCM Inputs and Outputs at Connector C (22P)*1

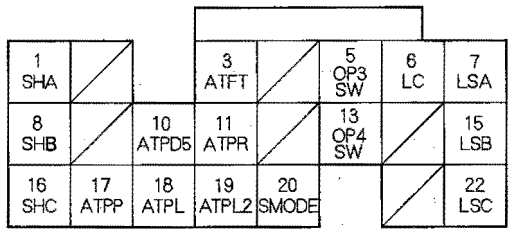

Wire side of female terminals

NOTE: Standard battery voltage is 12 V.

Terminal number	Wire color	Terminal name	Description	Signal
1	BLU/YEL	SHA (SHIFT SOLENOID VALVE A)	Drives shift solenoid valve A	With engine running in D and M (in 1st, 2nd, 5th gear), or L: battery voltage With engine running in Neutral, Park, R, or D and M (in 3rd, 4th gear): about 0 V
3	BLU/YEL	ATFT (ATF TEMPERATURE SENSOR)	Detects ATF temperature signal	With the ignition ON (II): about 0.2 — 4.0 V (about 1.8 V at operating temperature) (depending on ATF temperature)
5	BLU/WHT	OP3SW (3RD CLUTCH TRANSMISSION FLUID PRESSURE SWITCH)	Detects 3rd clutch transmission fluid pressure switch input	With the ignition switch ON (II): • Without 3rd clutch pressure: about 5 V • With 3rd clutch pressure: about 0 V
6	YEL	LC (TORQUE CONVERTER CLUTCH (TCC) SOLENOID VALVE)	Drives TCC solenoid valve	With lock-up ON: battery voltage With lock-up OFF: 0 V
7	RED	LSA (A/T CLUTCH PRESSURE CONTROL SOLENOID VALVE A)	Drives A/T clutch pressure control solenoid valve A	With the ignition switch ON(II): duty controlled
8	GRN/WHT	SHB (SHIFT SOLENOID VALVE B)	Drives shift solenoid valve B	With engine running D and M (in 1st, 2nd, 3rd gear), or, Neutral, Park, R, L: battery voltage With engine running in D and M (in 4th, 5th gear): about 0 V
10	YEL/GRN	ATPD5 (TRANSMISSION RANGE SWITCH D)	Detects transmission range switch D signal input	In D: 0 V In any other position: battery voltage
11	WHT	ATPR (TRANSMISSION RANGE SWITCH R)	Detects transmission range switch R signal input	In R: 0 V In any other position: battery voltage
13	BLU/YEL	OP4SW (4TH CLUTCH TRANSMISSION FLUID PRESSURE SWITCH)	Detects 4th clutch transmission fluid pressure switch input	With the ignition switch ON (II): • Without 4th clutch pressure: about 5 V • With 4th clutch pressure: about 0 V
15	BRN/WHT	LSB (A/T CLUTCH PRESSURE CONTROL SOLENOID VALVE B)	Drives A/T clutch pressure control solenoid valve B	With the ignition switch ON (II): duty controlled
16	GRN	SHC (SHIFT SOLENOID VALVE C)	Drives shift solenoid valve C	With engine running in L, D and M (in 1st, 3rd, 5th gear): battery voltage With engine running in Neutral, Park, R, D and M (in 2nd, 4th gear): about 0 V
17	BLU/BLK	ATPP (TRANSMISSION RANGE SWITCH PARK)	Detects transmission range switch park signal	In Park: 0 V In any other position: battery voltage
18	RED	ATPL (TRANSMISSION RANGE SWITCH L)	Detects transmission range switch L signal	In L: 0 V In any other position: battery voltage
19	BLU/YEL	ATPL2 (TRANSMISSION RANGE SWITCH L2)	Detects transmission range switch L signal	In L: 0 V In any other position: battery voltage
20	ORN	SMODE (SEQUENTIAL SPORT SHIFT MODE)	Detects sequential sportshift switch signal	In M: 0 V In other than M: about 5 V
22	GRN/RED	LSC (A/T CLUTCH PRESSURE CONTROL SOLENOID VALVE C)	Drives A/T clutch pressure control solenoid valve C	With the ignition switch ON (II): duty controlled

* 1: A/T

(cont'd)

System Description (cont'd)

ECM/PCM Inputs and Outputs at Connector D (17P)

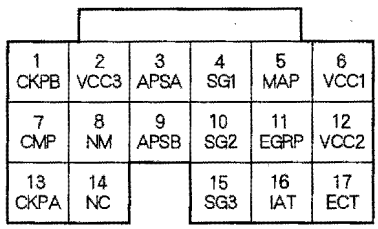

Wire side of female terminals

NOTE: Standard battery voltage is 12 V.

Terminal number	Wire color	Terminal name	Description	Signal
1	BLU/RED	CKPB (CRANKSHAFT POSITION (CKP) SENSOR B)	Detects CKP sensor B signal	With engine running: pulses
2	YEL/GRN	VCC3 (SENSOR VOLTAGE)	Provides sensor voltage	With ignition switch ON (II): about 5 V
3	RED/BLU	APSA (ACCELERATOR PEDAL POSITION (APP) SENSOR A)	Detects APP sensor A signal	With ignition switch ON (II) and accelerator pedal pressed: about 4.5 V With ignition switch ON (II) and accelerator pedal released: about 0.5 V
4	GRN/WHT	SG1 (SENSOR GROUND)	Sensor ground	Less than 1.0 V at all times
5	GRN/RED	MAP (MANIFOLD ABSOLUTE PRESSURE (MAP) SENSOR)	Detects MAP sensor signal	With ignition switch ON (II): about 3 V At idle: about 1.0 V (depending on engine speed)
6	YEL/RED	VCC1 (SENSOR VOLTAGE)	Provides sensor voltage	With ignition switch ON (II): about 5 V
7	YEL	CMP (CAMSHAFT POSITION (CMP) SENSOR)	Detects CMP sensor signal	With engine running: pulses
8	RED	NM (INPUT SHAFT (MAINSHAFT) SPEED SENSOR)	Detects input shaft (mainshaft) speed sensor signals	With ignition switch ON (II): 0 V or about 5 V With engine at idling in Neutral: about 2.5 V
9	RED/YEL	APSB (ACCELERATOR PEDAL POSITION (APP) SENSOR B)	Detects APP sensor B signal	With ignition switch ON (II) and accelerator pedal pressed: about 2.3 V With ignition switch ON (II) and accelerator pedal released: about 0.2 V
10	GRN/YEL	SG2 (SENSOR GROUND)	Sensor ground	Less than 1.0 V at all times
11	WHT/BLK	EGRP (EXHAUST GAS RECIRCULATION (EGR) VALVE POSITION SENSOR)	Detects EGR valve position sensor signal	With engine running: 1.2—3.0 V (depending on EGR valve lift)
12	YEL/BLU	VCC2 (SENSOR VOLTAGE)	Provides sensor voltage	With ignition switch ON (II): about 5 V With ignition switch OFF: 0 V
13	BLU	CKPA (CRANKSHAFT POSITION (CKP) SENSOR A)	Detects CKP sensor A signal	With engine running: pulses
14	BLU	NC (OUTPUT SHAFT (COUNTERSHAFT) SPEED SENSOR)	Detects output shaft (countershaft) speed sensor signals	With ignition switch ON (II) and front wheels rotated by hand: pulses
15	GRN	SG3 (SENSOR GROUND)	Sensor ground	Less than 1.0 V at all times
16	RED/YEL	IAT (INTAKE AIR TEMPERATURE (IAT) SENSOR)	Detects IAT sensor signal	With ignition switch ON (II): about 0.1—4.8 V (depending on intake air temperature)
17	RED/WHT	ECT (ENGINE COOLANT TEMPERATURE (ECT) SENSOR)	Detects ECT sensor signal	With ignition switch ON (II): about 0.1—4.8 V (depending on engine coolant temperature)

Protected by A R

ECM/PCM Inputs and Outputs at Connector E (31P)

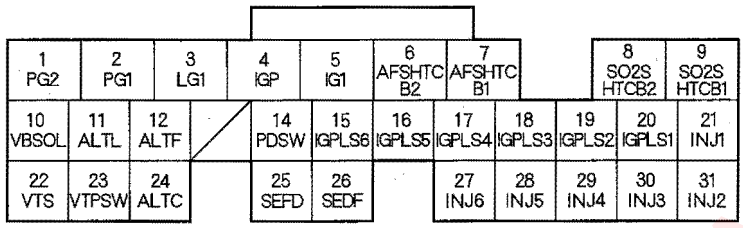

Wire side of female terminals

NOTE: Standard battery voltage is 12 V.

Terminal number	Wire color	Terminal name	Description	Signal
1	BLK	PG2 (POWER GROUND)	Ground circuit for ECM/PCM circuit	Less than 1.0 V at all times
2	BLK	PG1 (POWER GROUND)	Ground circuit for ECM/PCM circuit	Less than 1.0 V at all times
3	BRN/YEL	LG1 (LOGIC GROUND)	Ground circuit for ECM/PCM circuit	Less than 1.0 V at all times
4	YEL/BLK	IGP (POWER SOURCE)	Power source for ECM/PCM circuit	With ignition switch ON (II): battery voltage
5	BLK/GRN	IG1 (IGNITION SIGNAL)	Detects ignition signal	With ignition switch ON (II): battery voltage With ignition switch OFF: 0 V
6	GRN/WHT	AFSHTCB2 (AIR FUEL RATIO (A/F) SENSOR HEATER CONTROL BANK 2)	Drives front A/F sensor heater (Bank 2, sensor 1)	With ignition switch ON (II): battery voltage With fully warmed up engine running: about 0 V or pulses
7	BLK/WHT	AFSHTCB1 (AIR FUEL RATIO (A/F) SENSOR HEATER CONTROL BANK 1)	Drives rear A/F sensor heater (Bank 1, sensor 1)	With ignition switch ON (II): battery voltage With fully warmed up engine running: about 0 V or pulses
8	GRN/RED	SO2SHTCB2 (SECONDARY HEATED OXYGEN SENSOR (SECONDARY HO2S) HEATER CONTROL BANK 2)	Drives front secondary HO2S heater (Bank 2, sensor 2)	With ignition switch ON (II): battery voltage With fully warmed up engine running: duty controlled
9	BLK/WHT	SO2SHTCB1 (SECONDARY HEATED OXYGEN SENSOR (SECONDARY HO2S) HEATER CONTROL BANK 1)	Drives rear secondary HO2S heater (Bank 1, sensor 2)	With ignition switch ON (II): battery voltage With fully warmed up engine running: duty controlled
10	BLK/YEL	VBSOL (POWER SOURCE FOR SOLENOID VALVES)	Power source for solenoid valve	With ignition switch ON (II): battery voltage With ignition switch OFF: 0 V
11	WHT/BLU	ALTL (ALTERNATOR L SIGNAL)	Detects alternator L signal	With ignition switch ON (II): about 0 V With engine running: battery voltage
12	WHT/RED	ALTF (ALTERNATOR FR SIGNAL)	Detects alternator FR signal	With engine running: 0—5 V (depending on electrical load)
14	RED/GRN	PDSW (A/C PRESSURE SWITCH)	Detects A/C pressure switch signal	With A/C pressure switch ON: about 0 V With A/C pressure switch OFF: battery voltage

(cont'd)

System Description (cont'd)

ECM/PCM Inputs and Outputs at Connector E (31P)

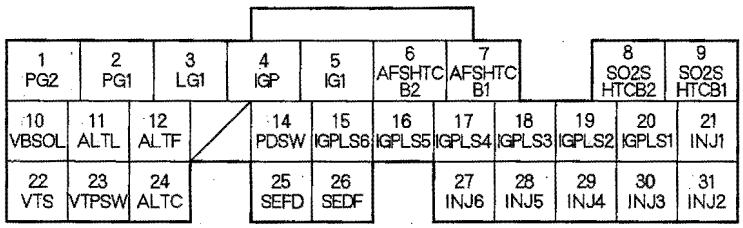

Wire side of female terminals

NOTE: Standard battery voltage is 12 V.

Terminal number	Wire color	Terminal name	Description	Signal
15	BRN/WHT	IGPLS6 (No. 6 IGNITION COIL PULSE)	Drives No. 6 ignition coil	With ignition switch ON (II): 0 V With engine running: pulses
16	BLK/RED	IGPLS5 (No. 5 IGNITION COIL PULSE)	Drives No. 5 ignition coil	
17	BRN	IGPLS4 (No. 4 IGNITION COIL PULSE)	Drives No. 4 ignition coil	
18	WHT/BLU	IGPLS3 (No. 3 IGNITION COIL PULSE)	Drives No. 3 ignition coil	
19	BLU/RED	IGPLS2 (No. 2 IGNITION COIL PULSE)	Drives No. 2 ignition coil	
20	YEL/GRN	IGPLS1 (No. 1 IGNITION COIL PULSE)	Drives No. 1 ignition coil	
21	BRN	INJ1 (No. 1 INJECTOR)	Drives No. 1 injector	At idle: duty controlled With ignition switch ON (II): battery voltage
22	GRN/YEL	VTS (VTEC SOLENOID VALVE)	Drives VTEC solenoid valve	At idle: about 0 V
23	BLU/BLK	VTPSW (VTEC OIL PRESSURE SWITCH)	Detects VTEC oil pressure switch signal	With engine at low speed: about 0 V With engine at high speed: battery voltage
24	WHT/GRN	ALTC (ALTERNATOR CONTROL)	Sends alternator control signal	With engine running and fully warmed up: battery voltage (depending on electrical load)
25	GRN	SEFD (THROTTLE ACTUATOR CONTROL SERIAL SIGNAL)	Sends throttle actuator control serial signal	
26	BLU	SEDF (THROTTLE ACTUATOR CONTROL SERIAL SIGNAL)	Detects throttle actuator control serial signal	
27	WHT/BLU	INJ6 (No. 6 INJECTOR)	Drives No. 6 injector	At idle: duty controlled With ignition switch ON (II): battery voltage
28	BLK/RED	INJ5 (No. 5 INJECTOR)	Drives No. 5 injector	
29	YEL	INJ4 (No. 4 INJECTOR)	Drives No. 4 injector	
30	BLU	INJ3 (No. 3 INJECTOR)	Drives No. 3 injector	
31	RED	INJ2 (No. 2 INJECTOR)	Drives No. 2 injector	

Protected by AR

PGM-FI System

The Programmed Fuel Injection (PGM-FI) system is a sequential multiport fuel injection system.

Air Conditioning (A/C) Compressor Clutch Relay
When the ECM receives a demand for cooling from the A/C system, it delays the compressor from being energized, and enriches the mixture to assure smooth transition to the A/C mode.

Air Fuel Ratio (A/F) Sensor
The A/F Sensor operates over a wide air/fuel range. The A/F Sensor is installed upstream of the TWC, and sends signals to the ECM/PCM which varies the duration of fuel injection accordingly.

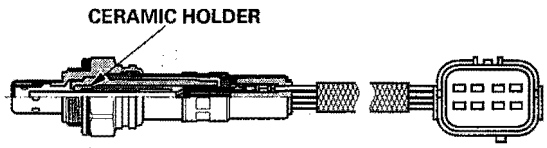

Barometric Pressure (BARO) Sensor
The BARO sensor is inside the ECM/PCM. It converts atmospheric pressure into a voltage signal that modifies the basic duration of the fuel injection discharge.

Camshaft Position (CMP) Sensor
The CMP sensor input is used by the ECM/PCM to determine ignition timing at start up (cranking) and when crank angle is abnormal.

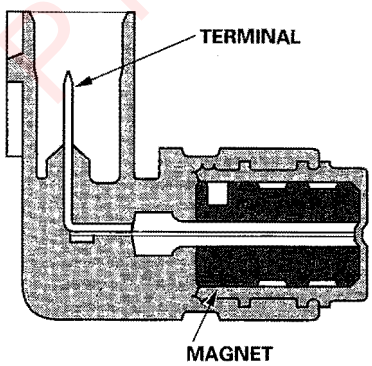

Crankshaft Position (CKP) Sensor
This CKP sensor detects crankshaft speed and is used by the ECM/PCM to determine ignition timing and timing for fuel injection of each cylinder as well as detecting engine misfire.

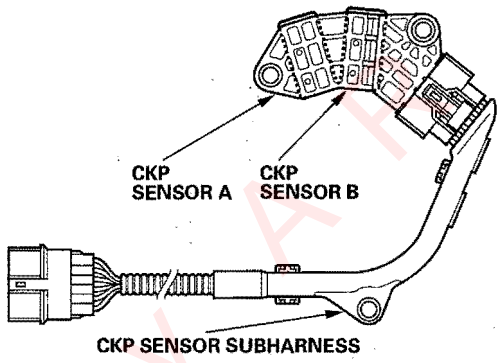

Engine Coolant Temperature (ECT) Sensor
The ECT sensor is a temperature dependent resistor (thermistor). The resistance of the thermistor decreases as the engine coolant temperature increases.

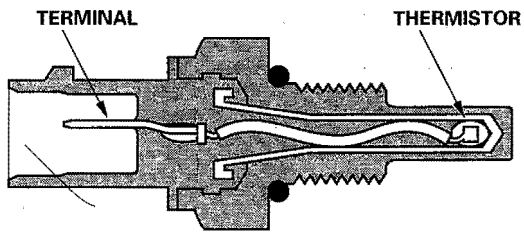

Ignition Timing Control
The ECM/PCM contains the memory for basic ignition timing at various engine speeds and manifold absolute pressure. It also adjusts the timing according to engine coolant temperature.

Injector Timing and Duration
The ECM/PCM contains the memory for basic discharge duration at various engine speeds and manifold pressures. The basic discharge duration, after being read out from the memory, is further modified by signals sent from various sensors to obtain the final discharge duration.
By monitoring long term fuel trim, the ECM/PCM detects long term malfunctions in the fuel system and sets a diagnostic trouble code (DTC).

(cont'd)

Protected by ATR

System Description (cont'd)

Input Shaft (Mainshaft) Speed Sensor
This sensor detects input shaft (mainshaft) speed.

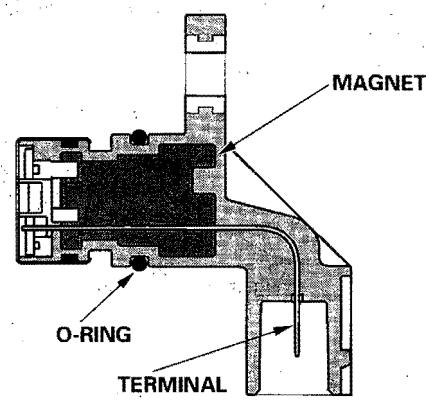

Intake Air Temperature (IAT) Sensor
The IAT sensor is a temperature dependent resistor (thermistor). The resistance of the thermistor decreases as the intake air temperature increases.

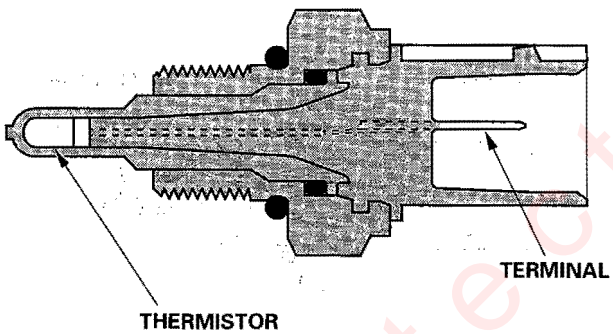

Knock Sensor
The knock control system adjusts the ignition timing to minimize knock.

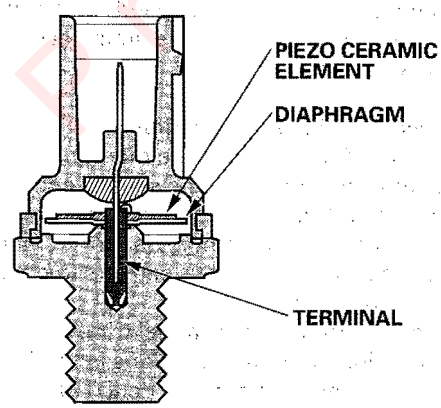

Malfunction Indicator Lamp (MIL) Indication (In relation to Readiness Codes)
The vehicle has certain "readiness codes" that are part of the on-board diagnostics for the emissions systems. If the vehicle's battery has been disconnected or gone dead, if the DTCs have been cleared, or if the ECM/PCM has been reset, these codes are reset. In some states, part of the emissions testing is to make sure these codes are set to complete. If all of them are not set to complete, the vehicle may fail the test, or the test cannot be finished.

To check if the readiness codes are set to complete, turn the ignition switch ON (II), but do not start the engine. The MIL will come on for 15—20 seconds. If it then goes off, the readiness codes are complete. If it flashes five times, one or more readiness codes are not complete. To set each code, drive the vehicle or run the engine as described in How to Set Readiness Codes (see page 11-51).

Manifold Absolute Pressure (MAP) Sensor
The MAP sensor converts manifold absolute pressure into electrical signals to the ECM/PCM.

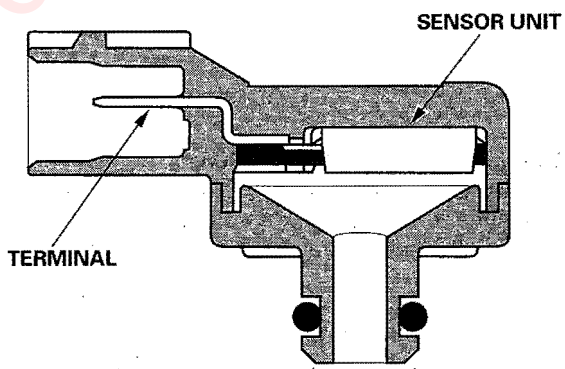

Protected by

Output Shaft (Countershaft) Speed Sensor
This sensor detects outputshaft (countershaft) speed.

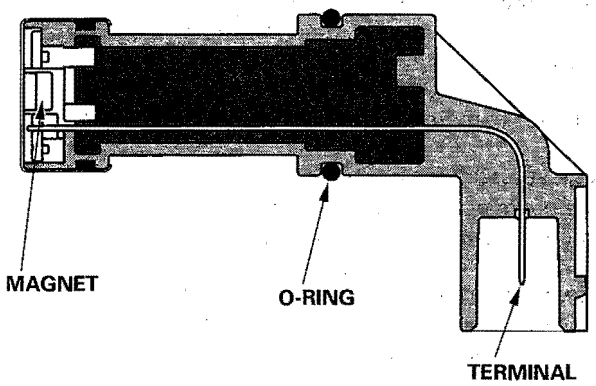

Secondary Heated Oxygen Sensor (Secondary HO2S)
The secondary HO2S detects the oxygen content in the exhaust gas downstream of the warm up three way catalytic converter (WU-TWC), and sends signals to the ECM/PCM. To stabilize its output, the sensor has an internal heater. The ECM/PCM compares the HO2S output with the A/F sensor output to determine catalyst efficiency. The secondary HO2S is on the WU-TWC.

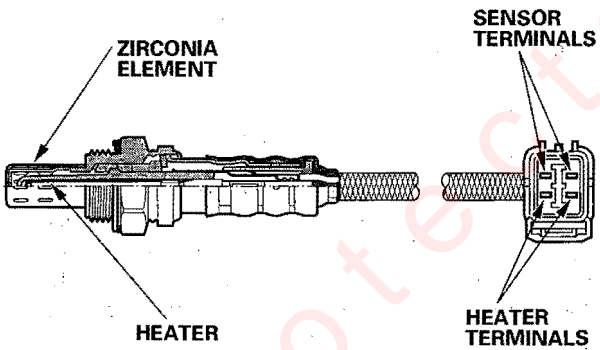

Electronic Throttle Control System

The throttle is electronically controlled by the electronic throttle control system. Refer to the System Diagram (see page 11-36) to see the functional layout of the system.

Idle control: When the engine is idling, the ECM/PCM controls the throttle actuator to maintain the proper idle speed according to engine loads.

Acceleration control: When the accelerator pedal is pressed, the ECM/PCM opens the throttle valve depending on the accelerator pedal position (APP) sensor signal.
Cruise control: The ECM/PCM controls the throttle actuator to maintain set speed when the cruise control is operating. The throttle actuator takes the place of the cruise control actuator.

Accelerator Pedal Position (APP) Sensor
As the accelerator pedal position changes, the sensor varies the signal voltage to the ECM/PCM.

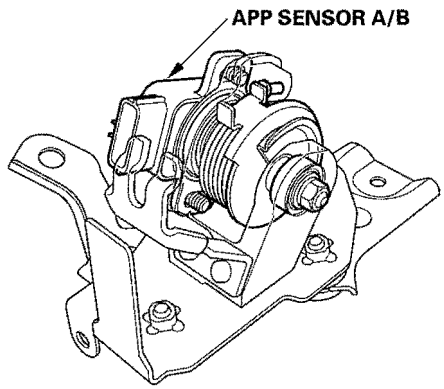

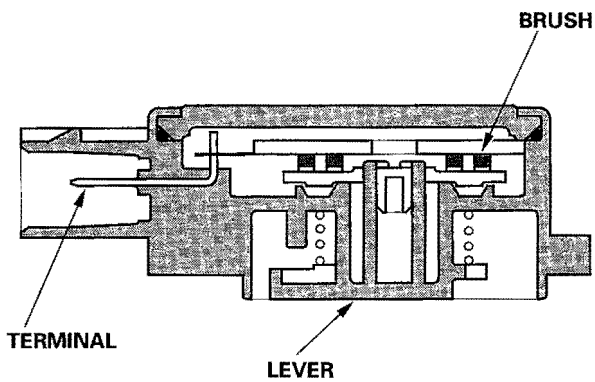

(cont'd)

Protected by A R

System Description (cont'd)

Throttle Body
The throttle body is a single-barrel side draft type. The lower portion of the throttle valve is heated by engine coolant from the cylinder head to prevent icing of the throttle plate.

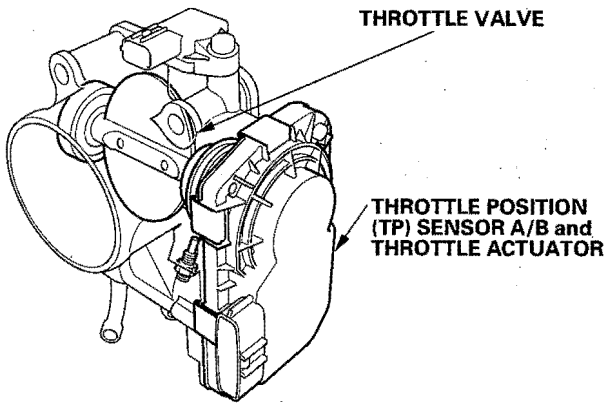

Idle Control System

When the engine is cold, the A/C compressor is on, the transmission is in gear, the brake pedal is pressed, the power steering load is high, or the alternator is charging, the ECM/PCM controls current to the throttle actuator to maintain the correct idle speed.

Brake Pedal Position Switch
The brake pedal position switch signals the ECM/PCM when the brake pedal is pressed.

Power Steering Pressure (PSP) Switch
The PSP switch signals the ECM/PCM when the power steering load is high.

Fuel Supply System

Fuel Cut-off Control
During deceleration with the throttle valve closed, current to the injectors is cut off to improve fuel economy at engine speeds over 950 rpm. Fuel cut-off control also occurs when the engine speed exceeds 6,900 rpm, regardless of the position of the throttle valve, to protect the engine from over-reving. When the vehicle is stopped, the ECM/PCM cuts the fuel at engine speeds over 5,000 rpm. Engine speed of fuel cut is lower on a cold engine.

Fuel Pump Control
When the ignition is turned on, the ECM/PCM grounds the PGM-FI main relay which feeds current to the fuel pump for 2 seconds to pressurize the fuel system. With the engine running, the ECM/PCM grounds the PGM-FI main relay and feeds current to the fuel pump. When the engine is not running and the ignition is on, the ECM/PCM cuts ground to the PGM-FI main relay which cuts current to the fuel pump.

PGM-FI Main Relay 1 and 2
The PGM-FI relay consists of two separate relays. PGM-FI main relay 1 (FI MAIN) is energized whenever the ignition switch is ON (II) to supply battery voltage to the ECM/PCM, power to the injectors, and power for PGM-FI main relay 2 (FUEL PUMP). PGM-FI main relay 2 (FUEL PUMP) is energized to supply power to the fuel pump for 2 seconds when the ignition switch is turned ON (II), and when the engine is cranking or running.

Protected by A R

Catalytic Converter System

Warm Up Three Way Catalytic Converter (WU-TWC) and Three Way Catalytic Converter (TWC)
The WU-TWC/TWC converts hydrocarbons (HC), carbon monoxide (CO), and oxides of nitrogen (NOx) in the exhaust gas to carbon dioxide (CO_2), nitrogen (N_2), and water vapor.

WU-TWC:

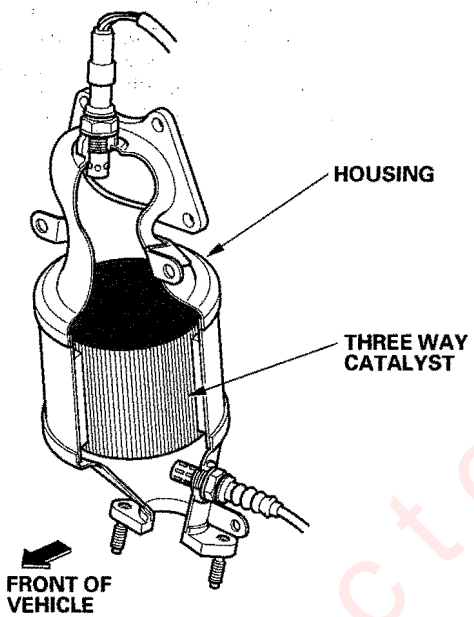

TWC:

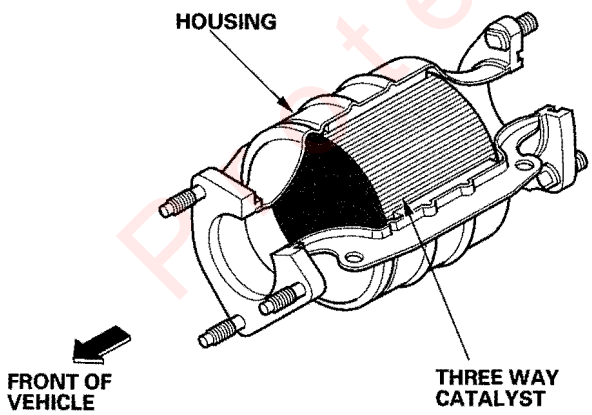

Exhaust Gas Recirculation (EGR) System

Refer to the System Diagram (see page 11-38) to see the functional layout of the system.

EGR Valve
The EGR valve lowers peak combustion temperatures and reduces oxides of nitrogen emissions (NOx) by recirculating exhaust gas through the intake manifold and into the combustion chambers.

Positive Crankcase Ventilation (PCV) System

The PCV valve prevents blow-by gasses from escaping into the atmosphere by venting them into the intake manifold.

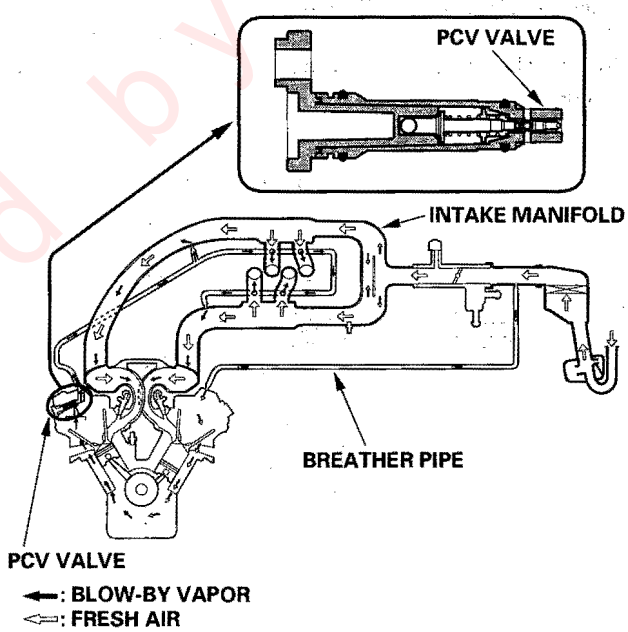

(cont'd)

Protected by AR

System Description (cont'd)

Evaporative Emission (EVAP) Control System

Refer to the System Diagram (see page 11-34) to see the functional layout of the system.

EVAP Canister
The EVAP canister temporarily stores fuel vapor from the fuel tank until it can be purged from the EVAP canister into the engine and burned.

EVAP Canister Purge Valve
When the engine coolant temperature is below 149°F (65°C), the ECM/PCM turns off the EVAP canister purge valve which cuts vacuum to the EVAP canister.

Fuel Tank Pressure (FTP) Sensor
The FTP sensor converts fuel tank absolute pressure into an electrical input to the ECM during the EVAP leak check.

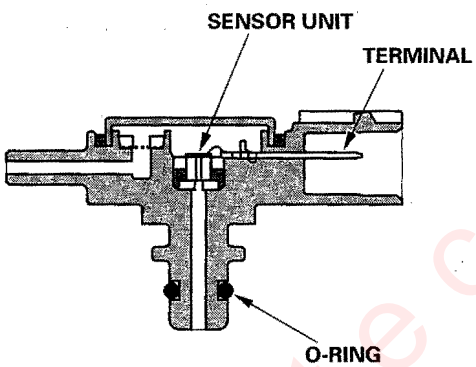

EVAP Canister Vent Shut Valve
The EVAP canister vent shut valve is on the EVAP canister.
The EVAP canister vent shut valve controls the venting of the EVAP canister.

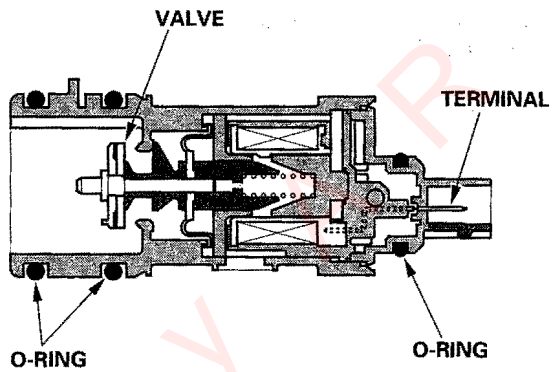

Protected by

Fuel Cap Caution

The ECM/PCM detects when the fuel fill cap is loose or missing under a specific condition and notifies the driver.

First drive cycle
In the first drive cycle, involving a cold start, the ECM/PCM stores a temporary DTC P0457 "Evaporative Emission (EVAP) System Leak Detected/Fuel Cap Loose or Missing" if the fuel fill cap is loose or missing, but no indicator will come on, and no message will be shown in the Multi-Information Display (A).

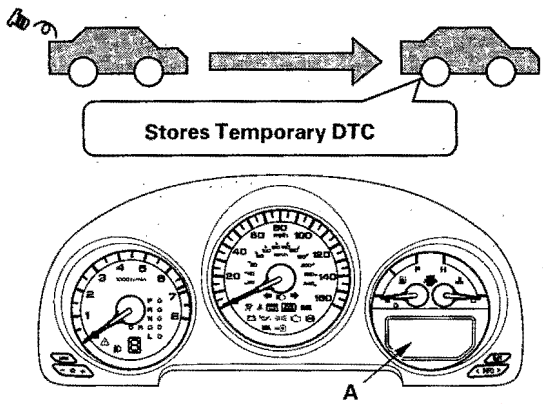

Second drive cycle
In the second drive cycle, involving a cold start, if the fuel fill cap is still loose or missing, the ECM/PCM notifies the driver to check the fuel fill cap by showing the message, "CHECK FUEL CAP" in the Multi-Information Display. Tightening the fuel fill cap properly will not make the message go off immediately.

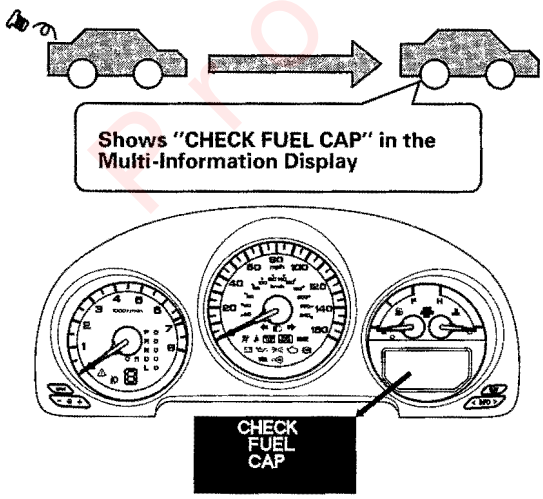

To make the message go off
Tighten the fuel fill cap properly (three clicks), and do this procedure several times.

1. Turn the ignition switch OFF.
2. Start the engine, and drive the vehicle at a steady speed over 28 mph (45 km/h) without moving the accelerator pedal for about 1 minute.

Third drive cycle
In the third drive cycle, involving a cold start, if the fuel fill cap is still loose or missing, the ECM/PCM stores DTC P0457 "Evaporative Emission (EVAP) System Leak Detected/Fuel Cap Loose or Missing" and indicates the malfunction indicator lamp (MIL) (A) comes on.

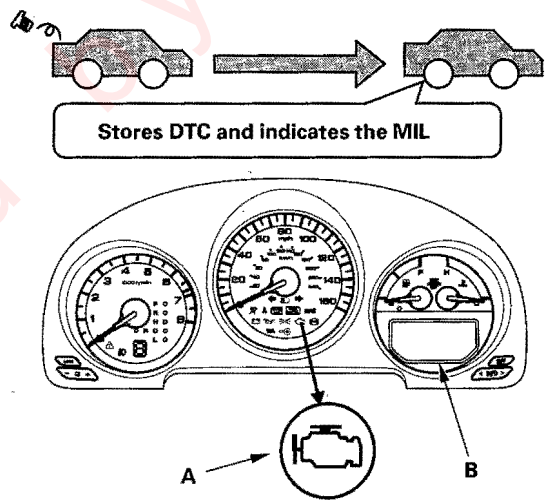

At this time, the message "CHECK FUEL CAP" will go off from the Multi-Information Display (B).

(cont'd)

System Description (cont'd)

Electronic Throttle Control System Diagram

The electronic throttle control system consists of the throttle actuator, throttle position (TP) sensor A/B, accelator pedal position (APP) sensor A/B, throttle actuator control module, and the ECM/PCM. The throttle is electronically controlled by this system.

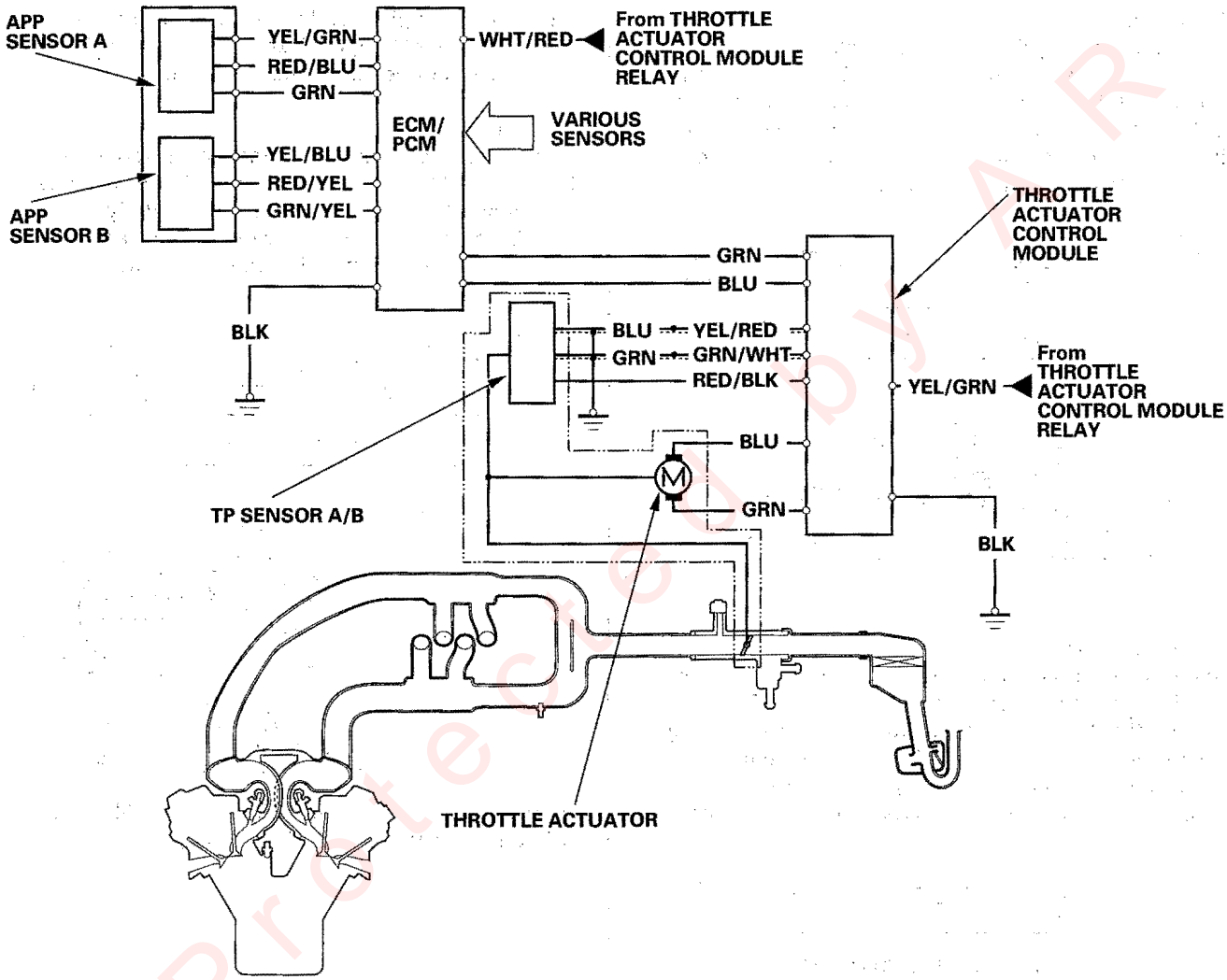

Protected by AR

Intake Manifold Tuning (IMT) Valve System

Engine power is achieved by closing and opening the intake manifold tuning (IMT) valve. When the valve is closed, there is high torque at low engine speed. When the valve is open, there is high torque at high engine speed.

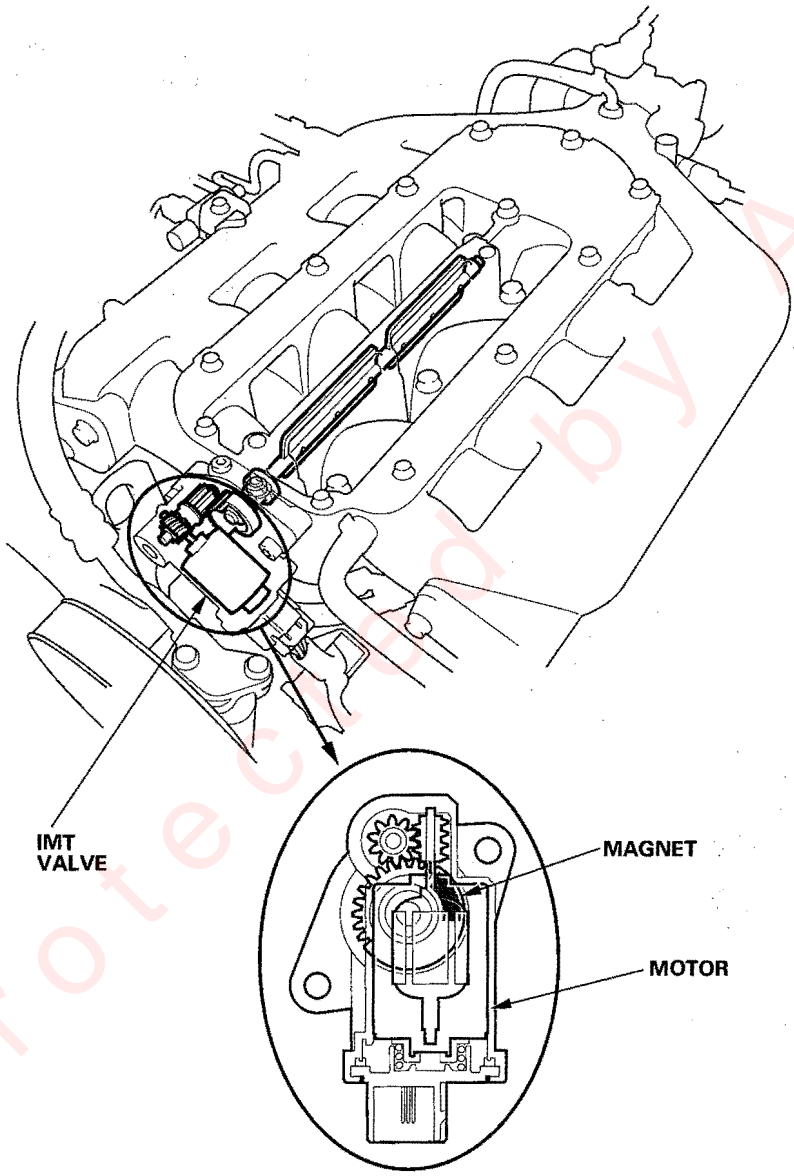

Protected by A R

(cont'd)

System Description (cont'd)

Exhaust Gas Recirculation (EGR) System Diagram

The EGR system reduces oxides of nitrogen (NOx) emissions by recirculating exhaust gas through the EGR valve and the intake manifold into the combustion chambers. The ECM/PCM memory includes the ideal EGR valve position for varying operating conditions.

The EGR valve position sensor detects the amount of EGR valve lift and sends it to the ECM/PCM. The ECM/PCM then compares it with the ideal lift in its memory (based on signals sent from other sensors). If there is any difference between the two, the ECM/PCM cuts current to the EGR valve.

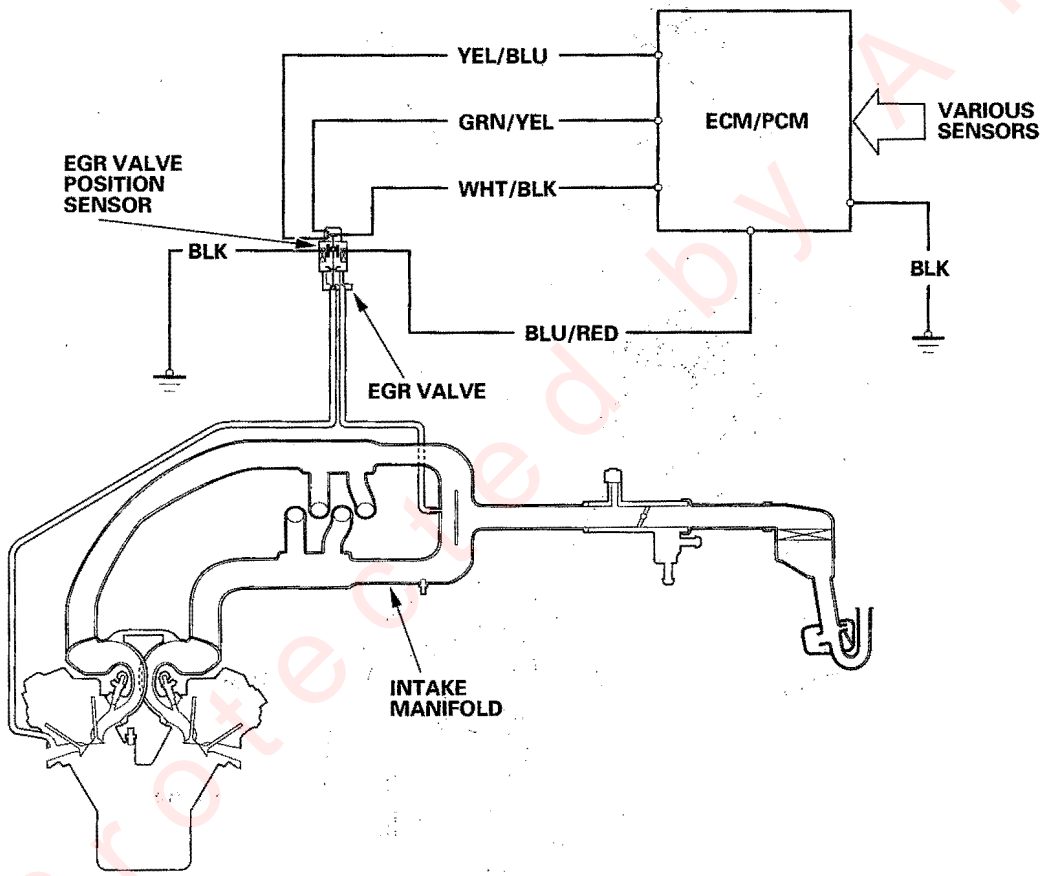

Protected by A R

Evaporative Emission (EVAP) Control Diagram

The EVAP controls minimize the amount of fuel vapor escaping to the atmosphere. Vapor from the fuel tank is temporarily stored in the EVAP canister until it can be purged from the canister into the engine and burned.

- The EVAP canister is purged by drawing fresh air through it and into a port on the intake manifold. The purging vacuum is controlled by the EVAP canister purge valve, which operates whenever engine coolant temperature is above 149°F (65°C).
- During refueling, the fuel tank vapor control valve opens with the pressure in the fuel tank, and feeds the fuel vapor to the EVAP canister.

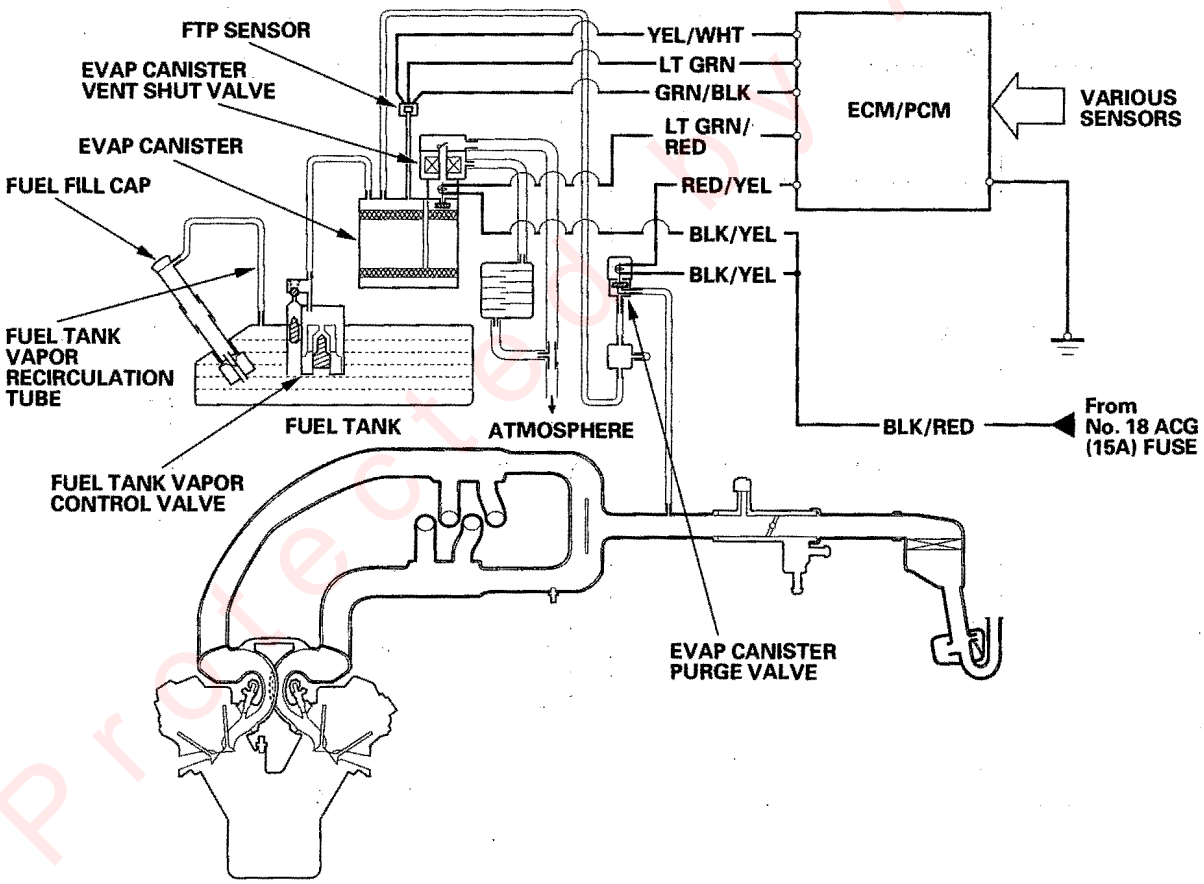

(cont'd)

System Description (cont'd)

ECM/PCM Circuit Diagram

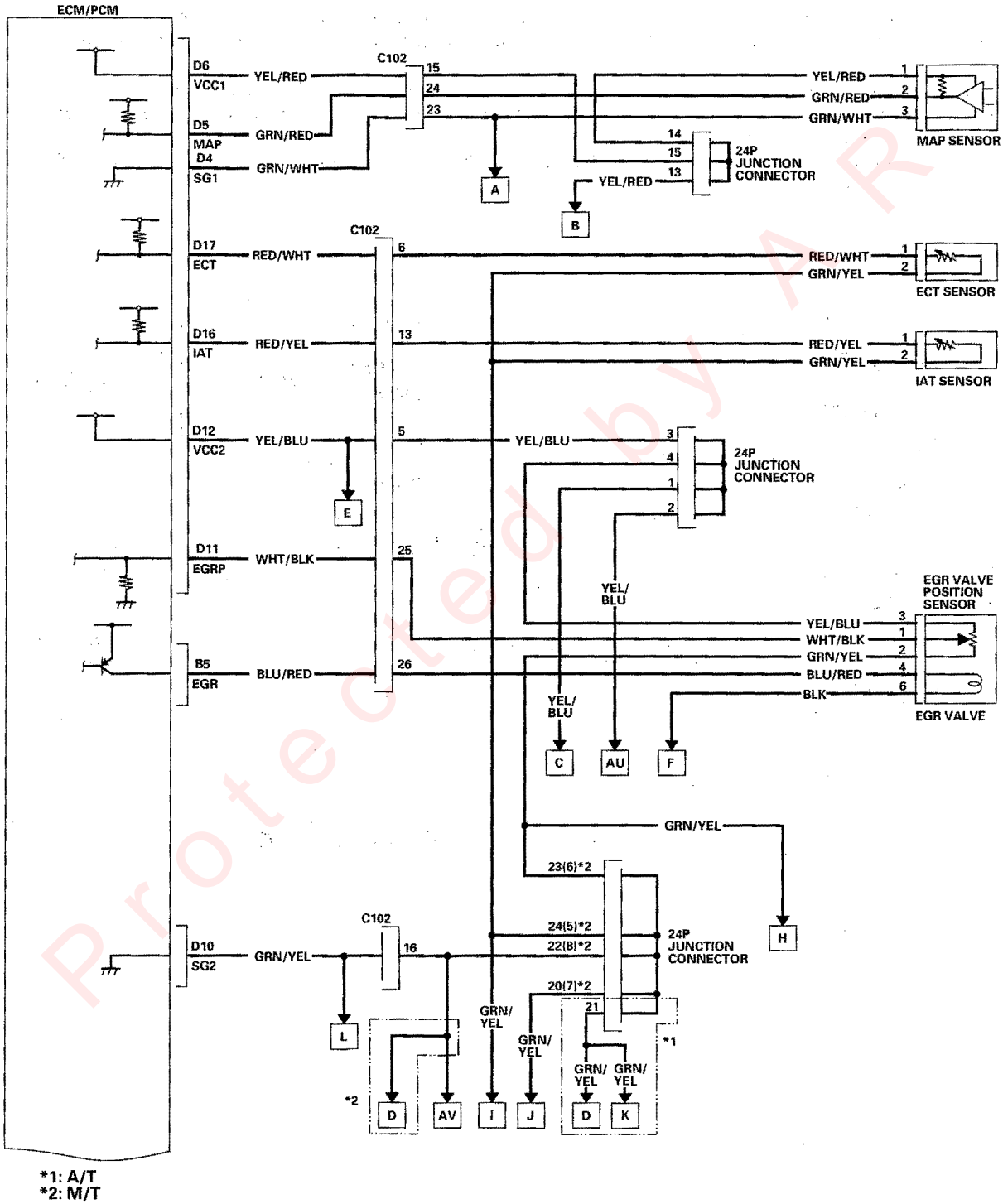

Protected by A R

ECM/PCM Circuit Diagram (cont'd)

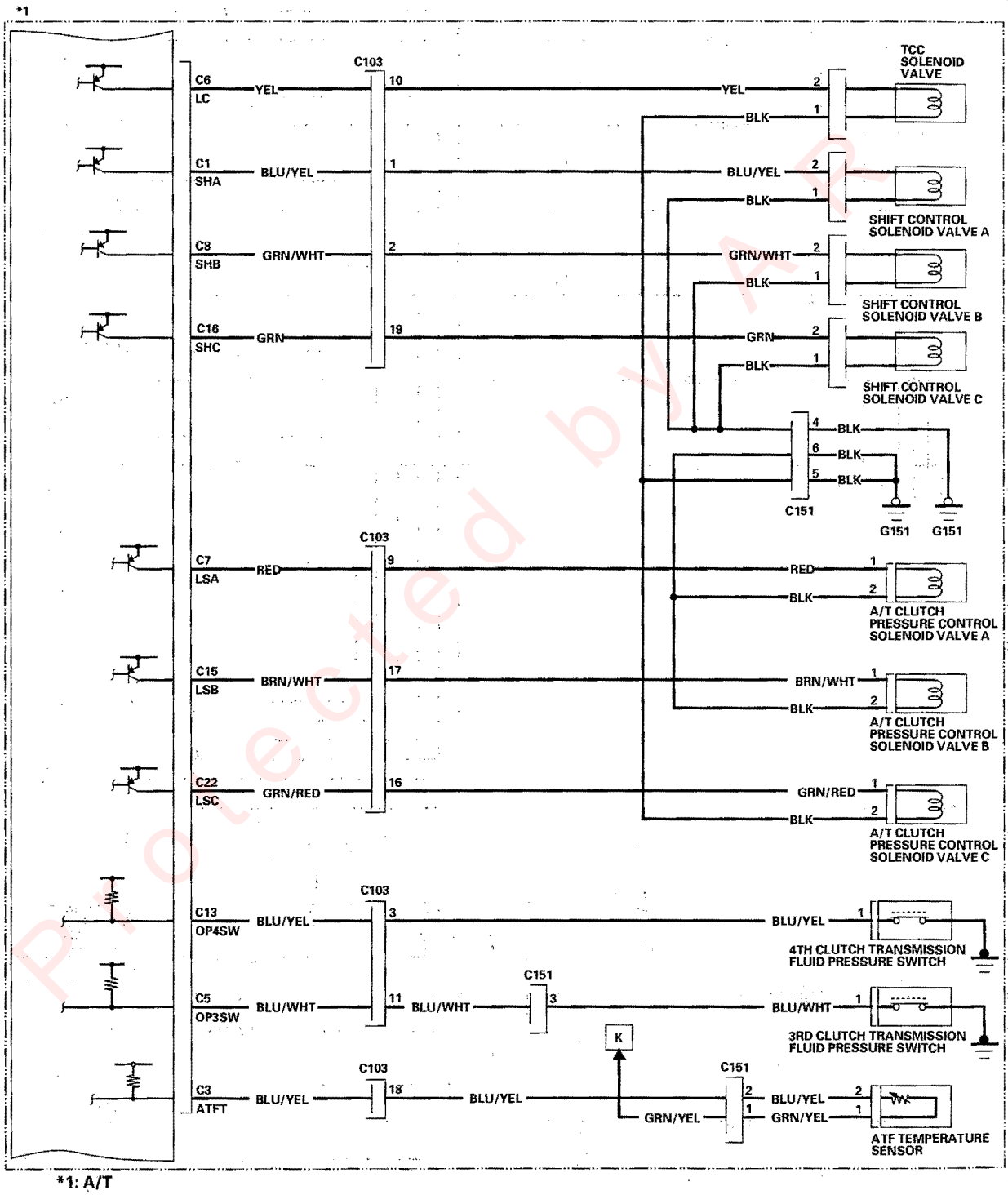

*1: A/T

Protected by AR

(cont'd)

System Description (cont'd)

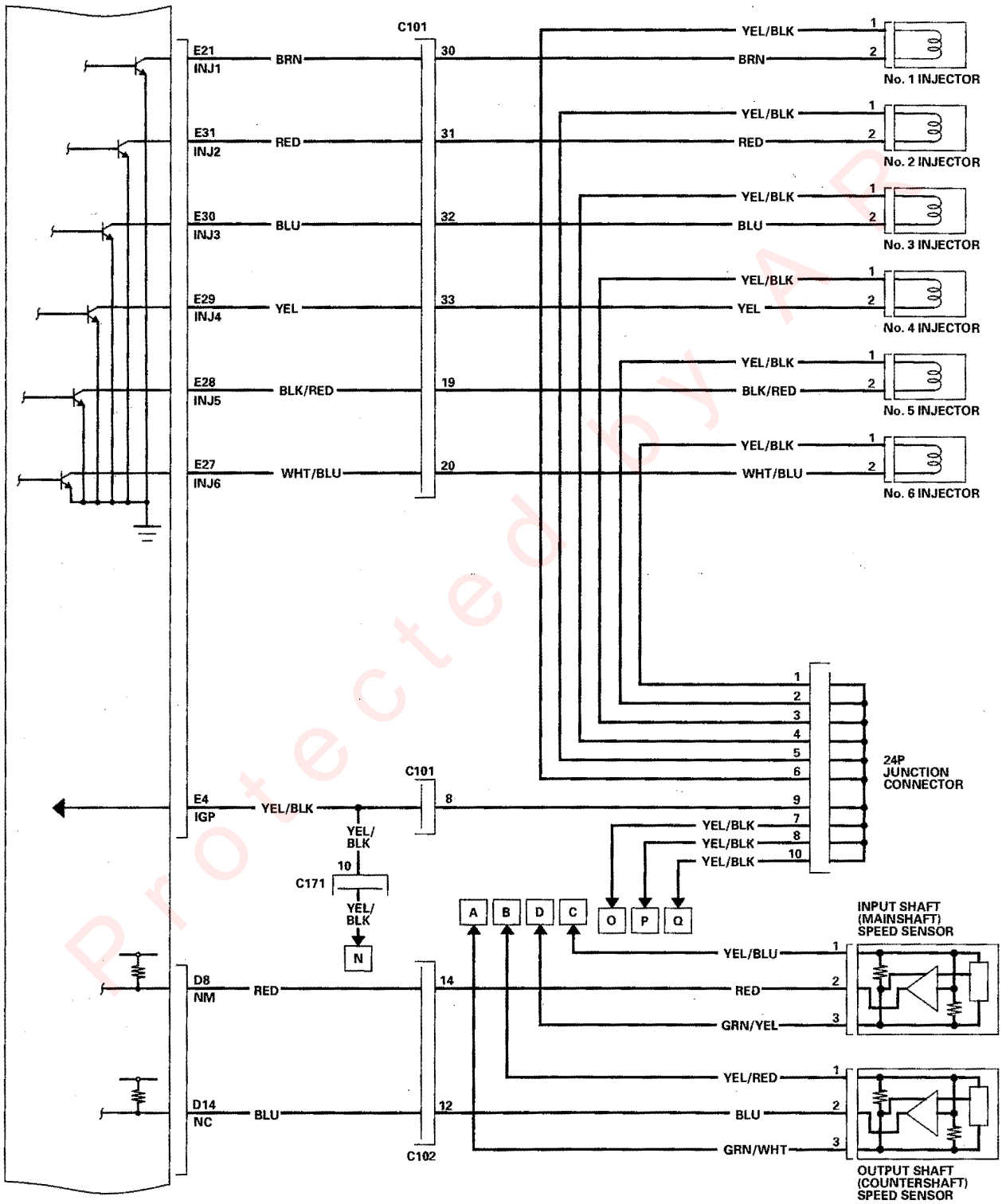

Protected by A P

ECM/PCM Circuit Diagram (cont'd)

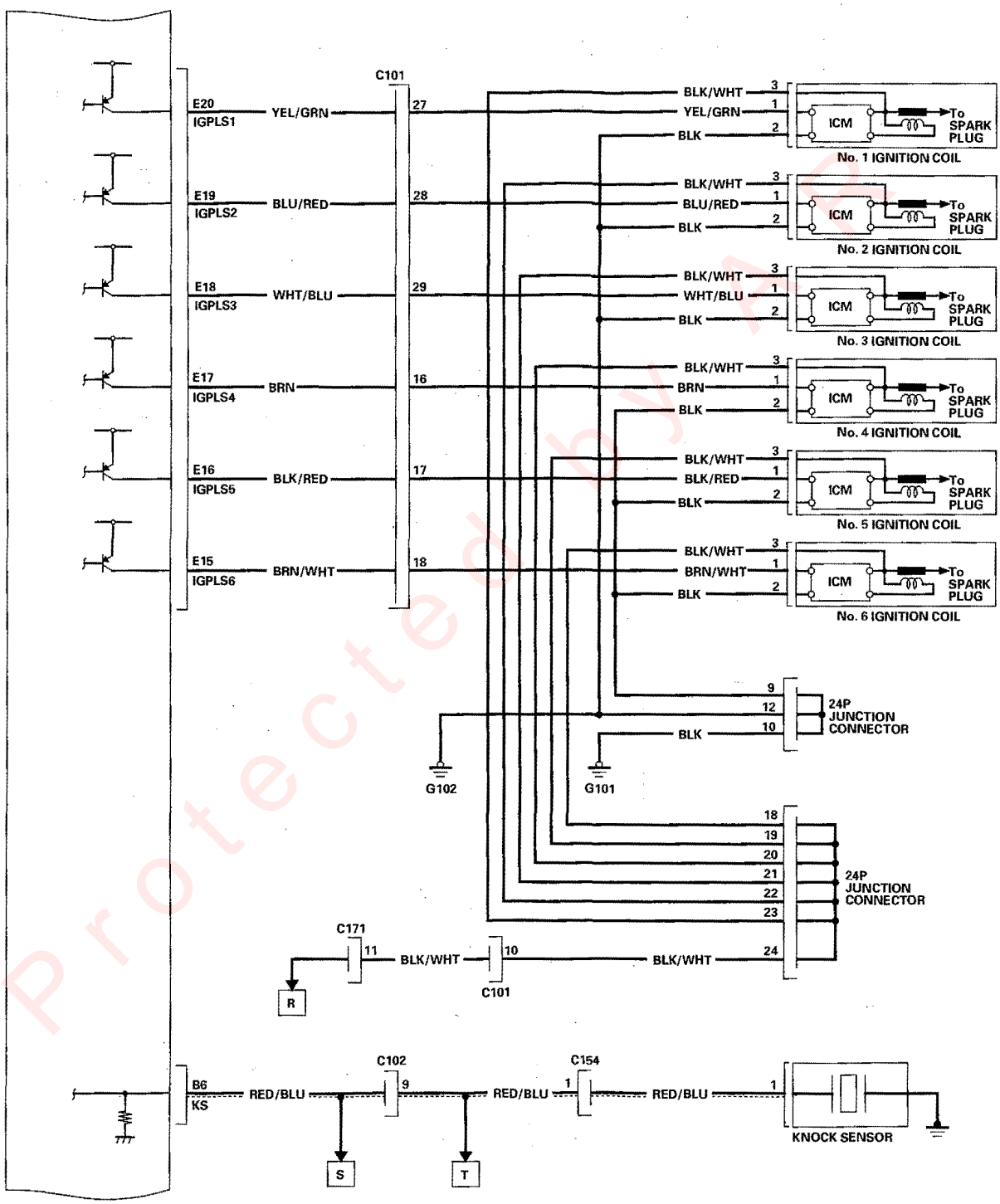

Protected by AP

(cont'd)

System Description (cont'd)

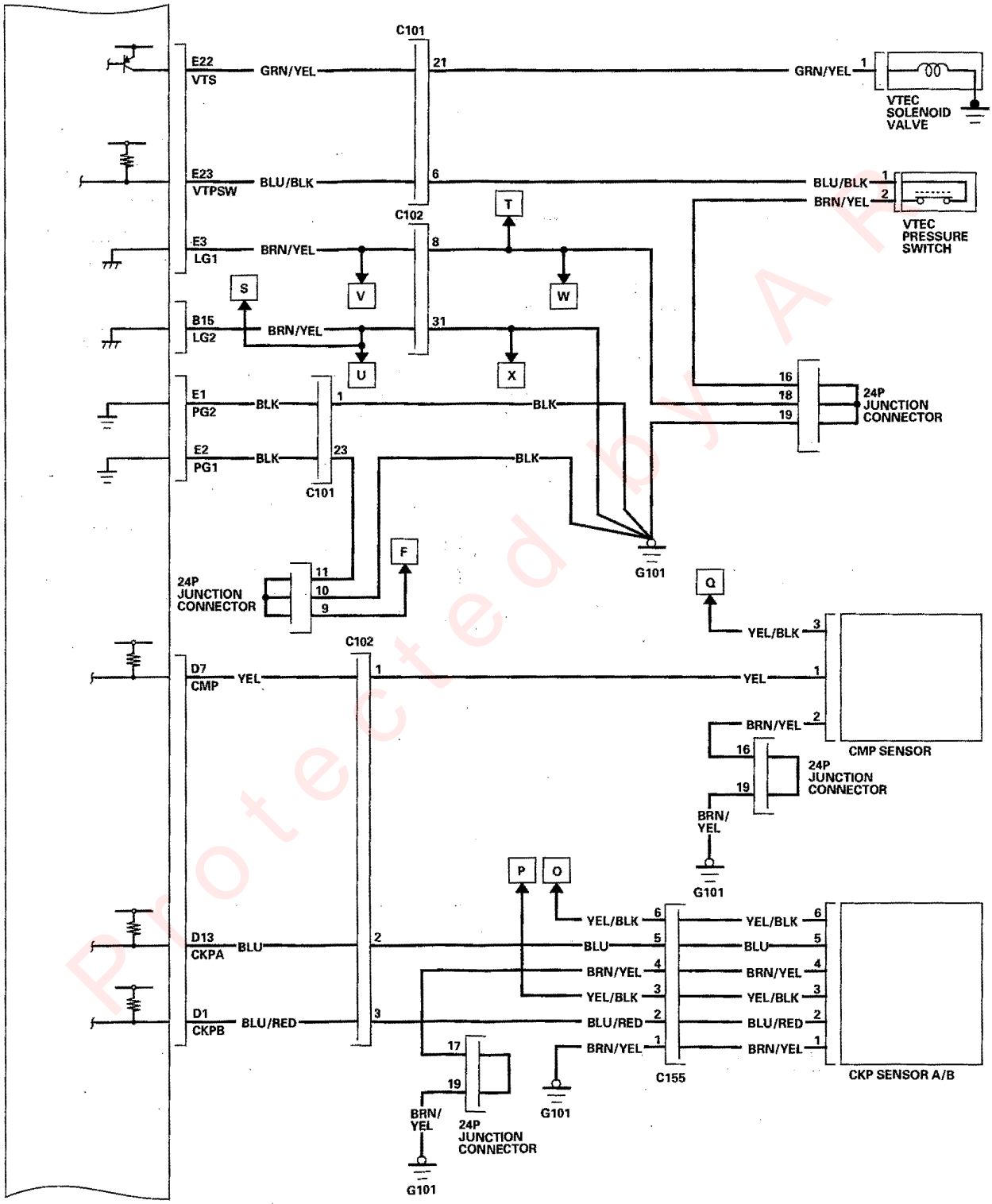

Protected by A R

ECM/PCM Circuit Diagram (cont'd)

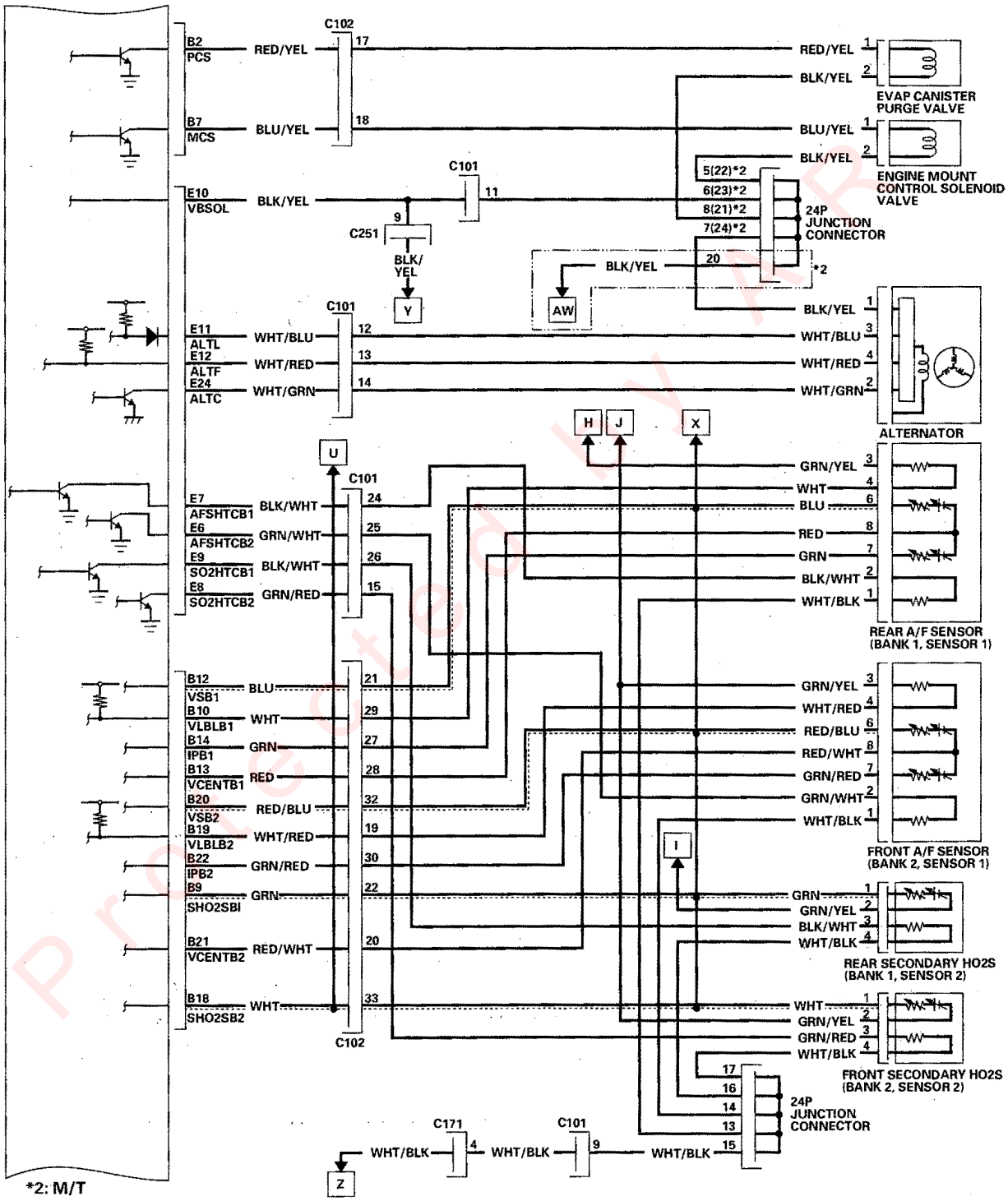

Protected by ARA

(cont'd)

System Description (cont'd)

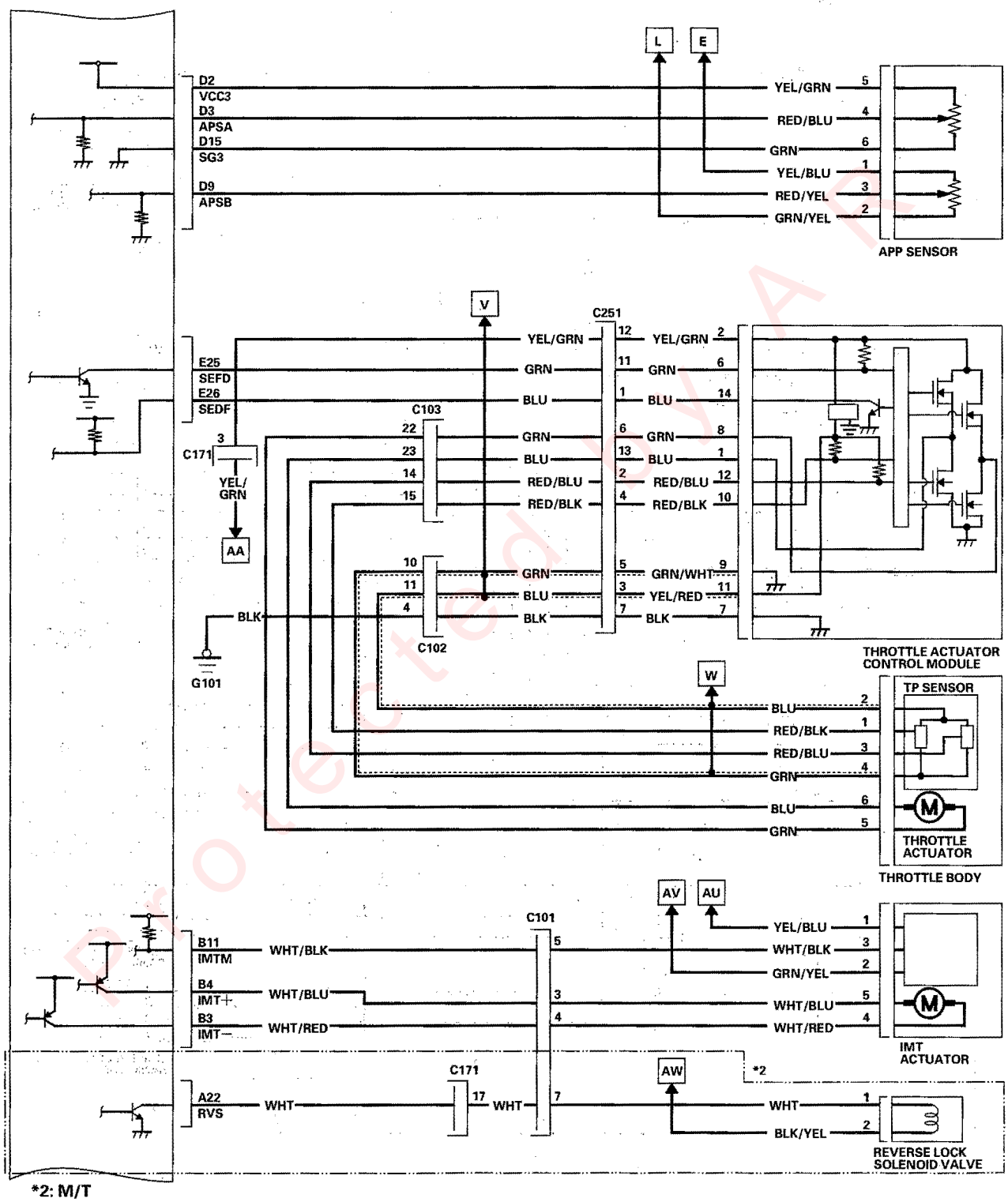

Protected by A P

ECM/PCM Circuit Diagram (cont'd)

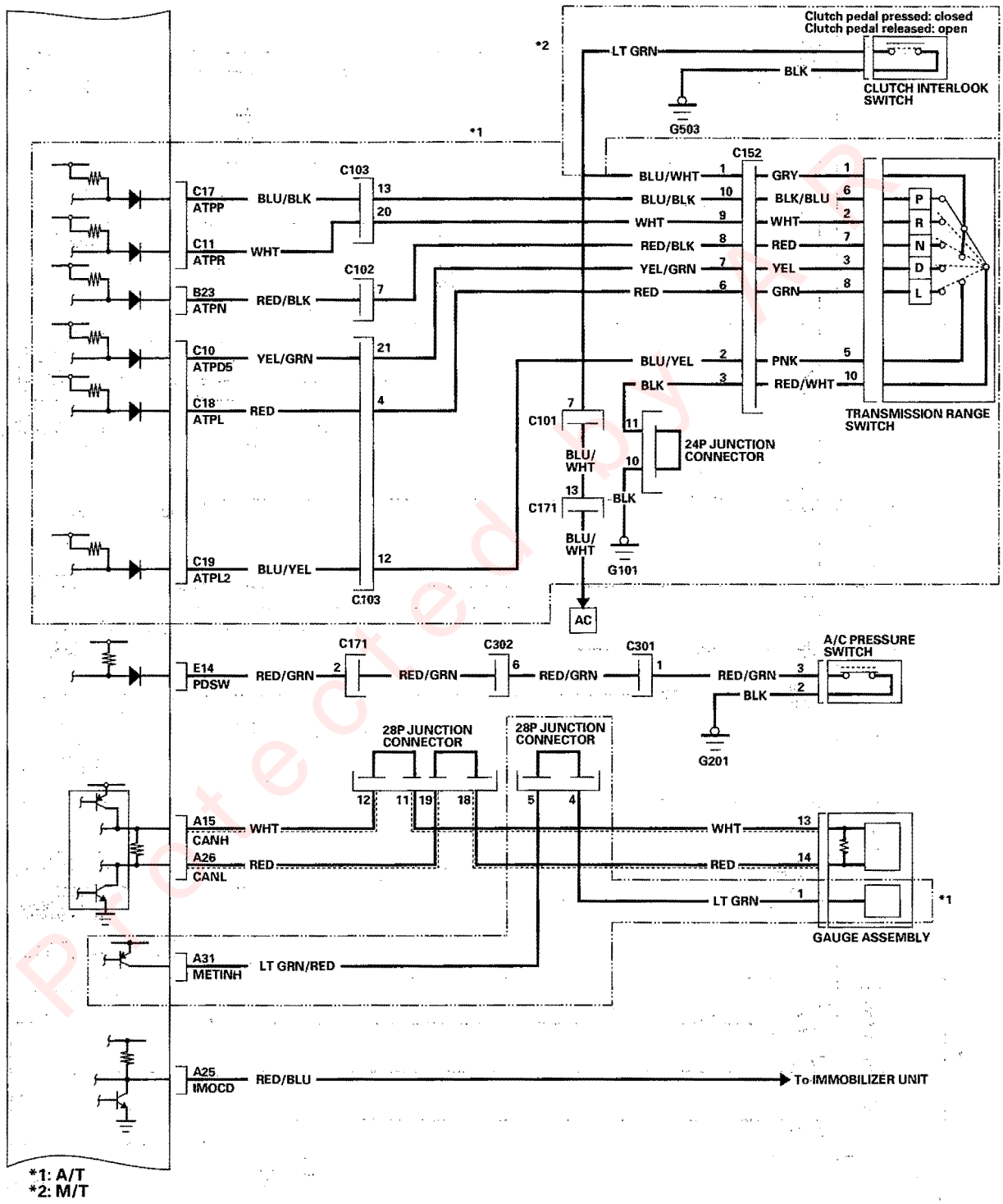

*1: A/T
*2: M/T

(cont'd)

Protected by AR

System Description (cont'd)

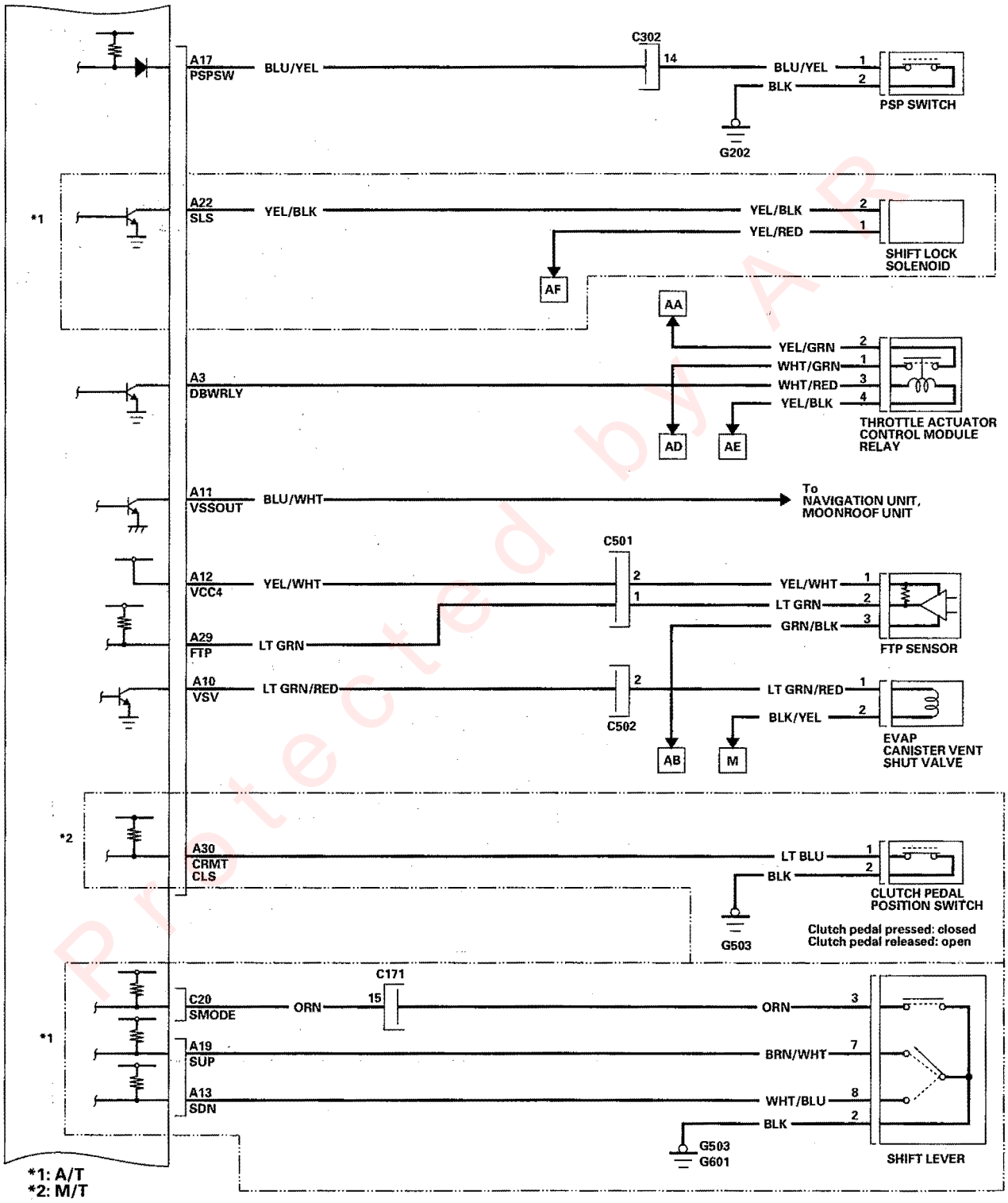

Protected by AR

ECM/PCM Circuit Diagram (cont'd)

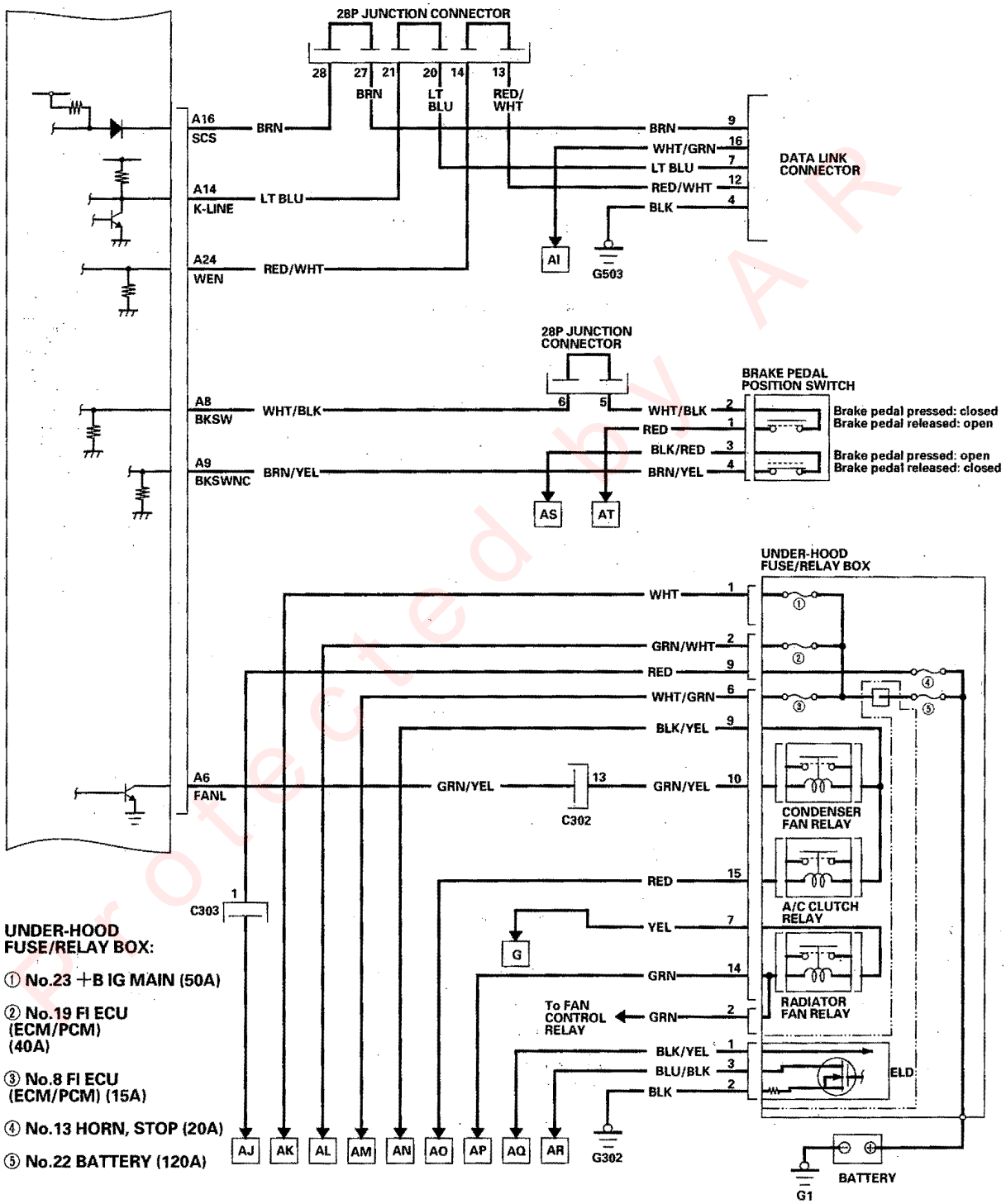

Protected by AR

(cont'd)

System Description (cont'd)

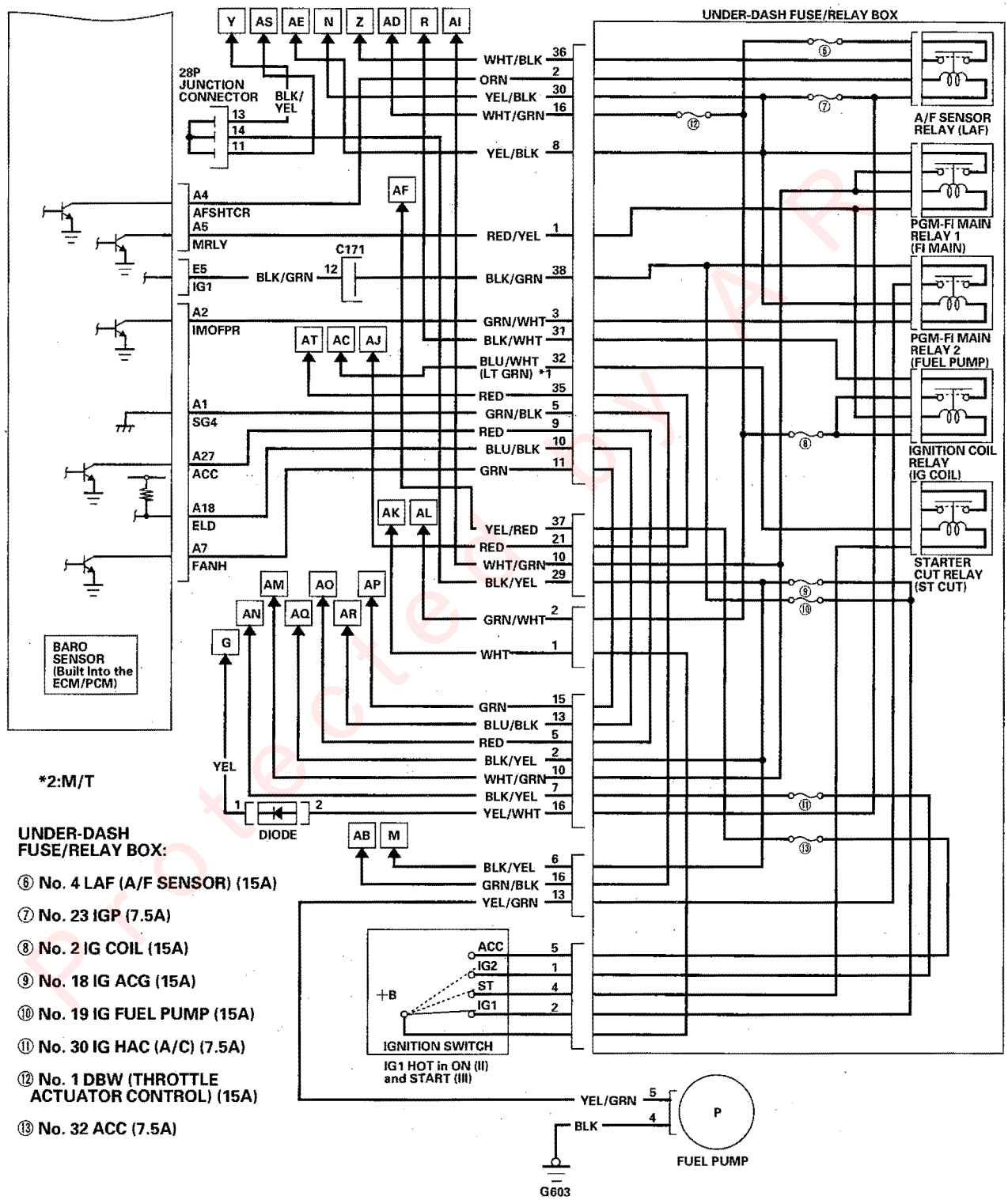

*2:M/T

UNDER-DASH FUSE/RELAY BOX:

⑥ No. 4 LAF (A/F SENSOR) (15A)

⑦ No. 23 IGP (7.5A)

⑧ No. 2 IG COIL (15A)

⑨ No. 18 IG ACG (15A)

⑩ No. 19 IG FUEL PUMP (15A)

⑪ No. 30 IG HAC (A/C) (7.5A)

⑫ No. 1 DBW (THROTTLE ACTUATOR CONTROL) (15A)

⑬ No. 32 ACC (7.5A)

Protected by A P

How to Set Readiness Codes

Malfunction Indicator Lamp (MIL) Indication (In relation to Readiness Codes)

The vehicle has certain "readiness codes" that are part of the on-board diagnostics for the emissions systems. If the vehicle's battery has been disconnected or gone dead, if the DTCs have been cleared, or if the ECM/PCM has been reset, these readiness codes are reset. In some states, part of the emissions testing is to make sure these codes are set to complete. If all of them are not set to complete, the vehicle may fail the emission test, or the test cannot be finished.

To check if the readiness codes are set to complete, turn the ignition switch ON (II), but do not start the engine. The MIL will come on for 15—20 seconds. If it then goes off, the readiness codes are complete. If it flashes five times, one or more readiness codes are not set to complete. To set readiness codes from incomplete to complete, do the procedure for the appropriate code.

To check the status of a specific DTC system, check the OBD status in the DTC MENU with the HDS (see page 11-7). This screen displays the code, the current data list of the enable criteria, and the status of the readiness testing.

Catalytic Converter Monitor and Readiness Code

NOTE:
- Do not turn the ignition switch off during the procedure.
- All readiness codes are cleared when the battery is disconnected or when the ECM/PCM is cleared with the HDS.
- Low ambient temperatures or excessive stop-and-go traffic may increase the drive time needed to switch the readiness code from incomplete to complete.
- The readiness code will not switch to complete until all the enable criteria are met.
- If a fault in the secondary HO2S system caused the MIL to come on, the readiness code cannot be set to complete until you correct the fault.

Enable Criteria

- ECT at 158°F (70°C) or higher.
- Intake air temperature (IAT) at 20°F (—7°C) or higher.
- Vehicle speed sensor (VSS) reads more than 25 mph (40 km/h).

Procedure

1. Connect the HDS to the vehicle's data link connector (DLC), and bring up the READINESS CODEs screen for Catalyst in the DTCs MENU.
2. Start the engine.
3. Test-drive the vehicle under stop-and-go conditions with short periods of steady cruise. After about 5 miles (8 km), the readiness code should switch to completed.
4. If the readiness code is still not set to complete, check for a temporary DTC with the HDS. If there is no DTC, one or more of the enable criteria were probably not met; repeat the procedure.

(cont'd)

Protected by A.P.

How to Set Readiness Codes (cont'd)

Evaporative Emission (EVAP) Control System Monitor and Readiness Code

NOTE: All readiness codes are cleared when the battery is disconnected or when the ECM/PCM is cleared with the HDS.

Enable Criteria

- Battery voltage is higher than 10.5 V.
- Engine at idle.
- ECT sensor between 176°F (80°C) and 212°F (100°C).
- MAP sensor less than 46.6 kPa (350 mmHg, 14 in.Hg).
- Vehicle speed 0 mph (0 km/h).
- IAT sensor between 32°F (0°C) and 212°F (100°C).

Procedure

1. Connect the HDS to the vehicle's data link connector (DLC).
2. Start the engine.
3. Select EVAP TEST in the INSPECTION MENU with the HDS, then select the FUNCTION TEST in the EVAP TEST MENU.
   - If the functions are normal, readiness is complete.
   - If the functions are not normal, go to the next step.
4. If the readiness code is still not set to complete, check for a temporary DTC. If there is no DTC, one or more of the enable criteria were probably not met; repeat the procedure.

Air Fuel Ratio (A/F) Sensor Monitor and Readiness Code

NOTE:
- Do not turn the ignition switch off during the procedure.
- All readiness codes are cleared when the battery is disconnected or when the ECM/PCM is cleared with the HDS.

Enable Criteria

ECT at 140°F (60°C) or higher.

Procedure

1. Start the engine.
2. Test-drive the vehicle under stop-and-go conditions with short periods of steady cruise. During the drive, decelerate (with the throttle fully closed) for 5 seconds. After about 3.5 miles (5.6 km), the readiness code should switch from incomplete to complete.
3. Check the readiness codes screen for the Air Fuel Ratio (A/F) Sensor in the DTCs MENU with the HDS.
   - If the screen shows complete, readiness is complete.
   - If the screen shows not complete, go to the next step.
4. Check for a temporary DTC. If there is no DTC, the enable criteria was probably not met. Select the DATA LIST Menu. Check the ECT in the ALL DATA LIST with the HDS. If the ECT is lower than 140°F (60°C), run the engine until it is higher than 140°F (60°C), then repeat the procedure.

Protected by AR

Air Fuel Ratio (A/F) Sensor Heater Monitor Readiness Code

NOTE: All readiness codes are cleared when the battery is disconnected or when the ECM/PCM is cleared with the HDS.

Procedure

1. Start the engine, and let it idle for 1 minute. The readiness code should switch from incomplete to complete.

2. If the readiness code is still not set to complete, check for a temporary DTC. If there is no DTC, repeat the procedure.

Misfire Monitor and Readiness Code

- This readiness code is always set to available because misfiring is continuously monitored.
- Monitoring pauses, and the misfire counter resets, if the vehicle is driven over a rough road.
- Monitoring also pauses, and the misfire counter holds at its current value, if the throttle position changes more than a predetermined value, or if driving conditions fall outside the range of any related enable criteria.

Fuel System Monitor and Readiness Code

- This readiness code is always set to available because the fuel system is continuously monitored during closed loop operation.
- Monitoring pauses when the catalytic converter, EVAP control system, and A/F sensor monitors are active.
- Monitoring also pauses when any related enable criteria are not being met. Monitoring resumes when the enable criteria is again being met.

Comprehensive Component Monitor and Readiness Code

This readiness code is always set to available because the comprehensive component monitor is continuously running whenever the engine is cranking or running.

EGR Monitor and Readiness Code

NOTE:
- Do not turn the ignition switch off during the procedure.
- All readiness codes are cleared when the battery is disconnected or when the ECM/PCM is cleared with the HDS.

Enable Criteria

ECT at 176°F (80°C) or higher.

Procedure

1. Connect the HDS to the vehicle's data link connector (DLC).

2. Start the engine.

3. Drive at a steady speed with the A/T in D position or M/T in 4th gear, 50—62 mph (80—100 km/h) or above for more than 10 seconds.

4. With the A/T in D position or M/T in 4th gear, decelerate from 62 mph (100 km/h) or above by completely releasing the throttle for at least 5 seconds. If the engine is stopped during this procedure, go to step 3 and do the procedure again.

5. Check the OBD status screen for DTC P0401 in the DTC's MENU with the HDS.

   - If it is passed, readiness is complete.
   - If it is not passed, go to step 3 and retest.

Protected by AR

Component Location Index

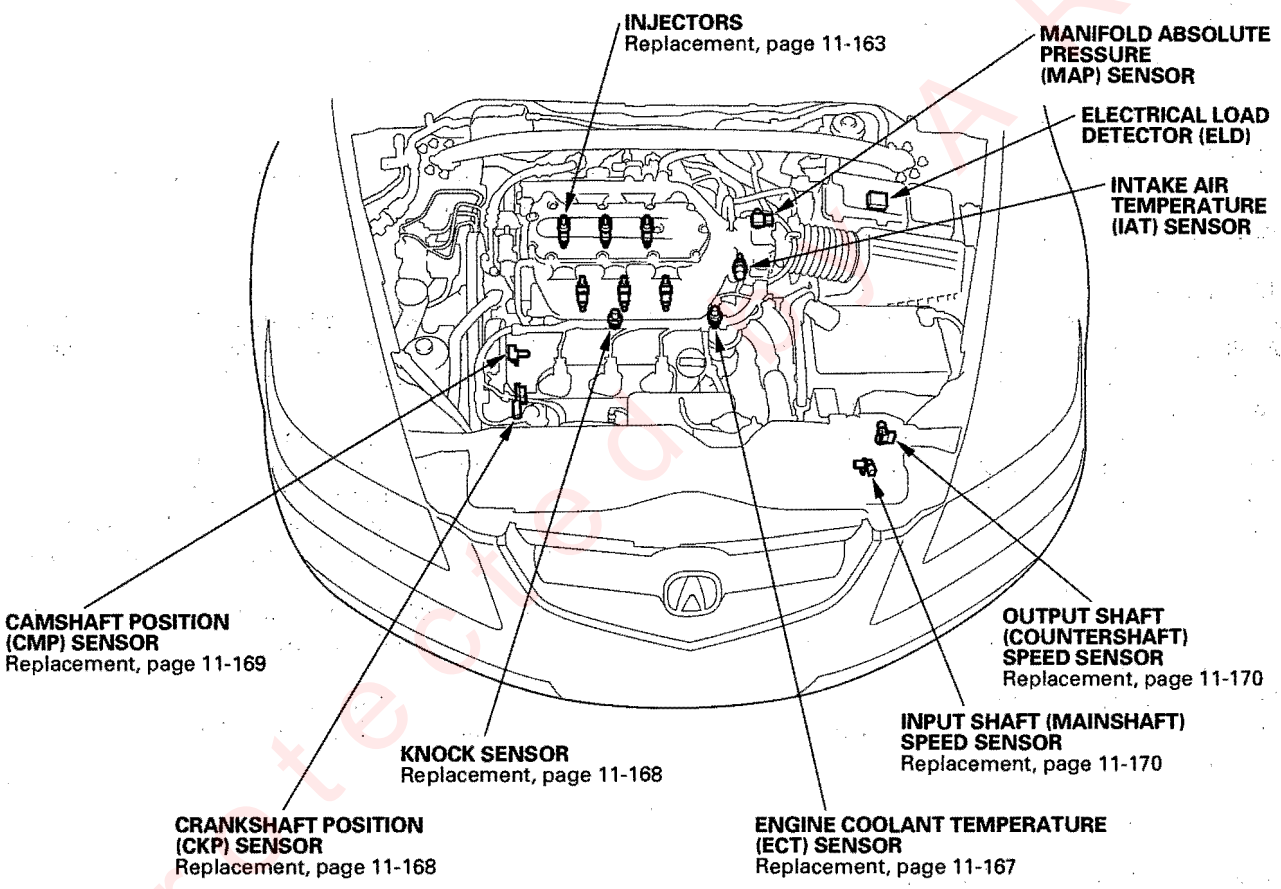

Protected by AR

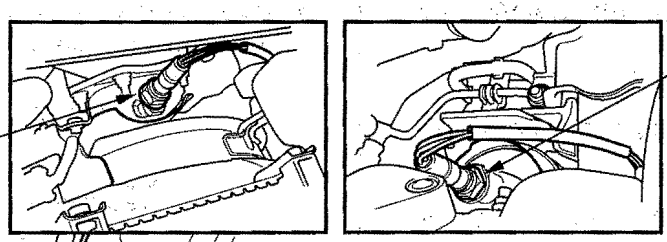

REAR AIR FUEL RATIO (A/F) SENSOR (BANK 1, SENSOR 1)
Replacement, page 11-165

FRONT AIR FUEL RATIO (A/F) SENSOR (BANK 2, SENSOR 1)
Replacement, page 11-165

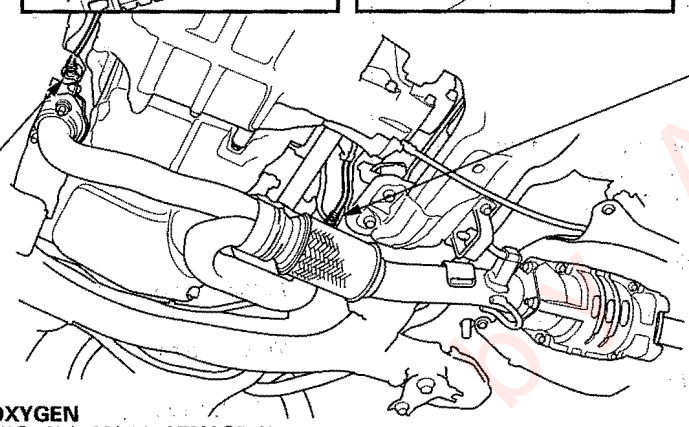

REAR SECONDARY HEATED OXYGEN SENSOR (SECONDARY HO2S) (BANK 1, SENSOR 2)
Replacement, page 11-166

FRONT SECONDARY HEATED OXYGEN SENSOR (SECONDARY HO2S) (BANK 2, SENSOR 2)
Replacement, page 11-166

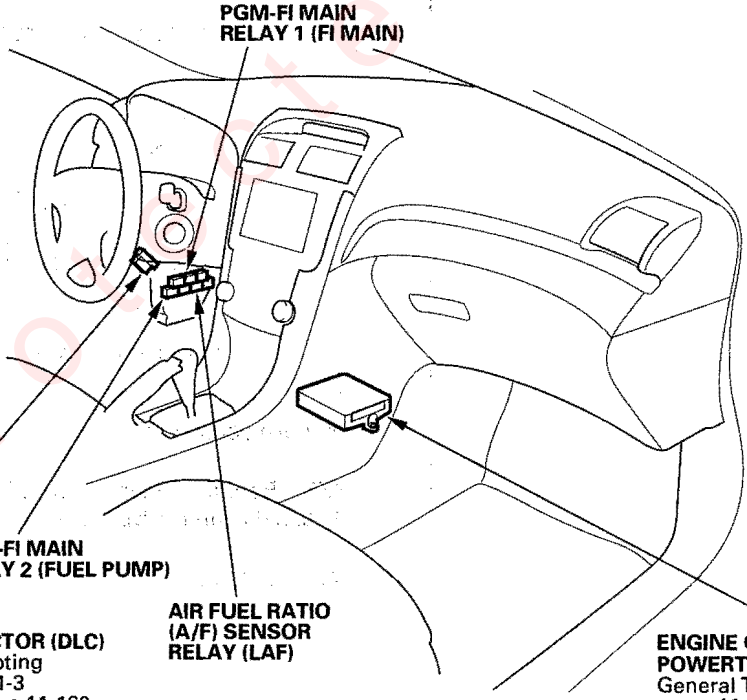

PGM-FI MAIN RELAY 1 (FI MAIN)

PGM-FI MAIN RELAY 2 (FUEL PUMP)

AIR FUEL RATIO (A/F) SENSOR RELAY (LAF)

DATA LINK CONNECTOR (DLC)
General Troubleshooting Information, page 11-3
Troubleshooting, page 11-160

ENGINE CONTROL MODULE (ECM)/ POWERTRAIN CONTROL MODULE (PCM)
General Troubleshooting Information, page 11-3

Provided by AR

DTC Troubleshooting

DTC P0107: MAP Sensor Circuit Low Voltage

1. Turn the ignition switch ON (II).
2. Check the MAP SENSOR in the DATA LIST with the HDS.

   Is about 3 kPa (1.0 in.Hg, 26 mmHg), or 0.23 V or less indicated?

   YES – Go to step 3.

   NO – Intermittent failure, system is OK at this time. Check for poor connections or loose terminals at the MAP sensor and the ECM/PCM. ■
3. Turn the ignition switch OFF.
4. Disconnect the MAP sensor 3P connector.
5. Turn the ignition switch ON (II).
6. Check the MAP SENSOR in the DATA LIST with the HDS.

   Is about 3 kPa (1.0 in.Hg, 26 mmHg), or 0.23 V or less indicated?

   YES – Go to step 9.

   NO – Go to step 7.
7. Measure voltage between MAP sensor 3P connector terminals No. 1 and No. 3.

   MAP SENSOR 3P CONNECTOR

   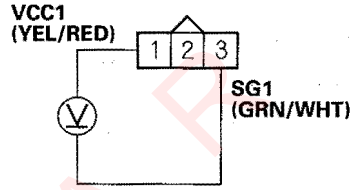

   Wire side of female terminals

   Is there about 5 V?

   YES – Go to step 13.

   NO – Go to step 8.
8. Measure voltage between ECM/PCM connector terminals D4 and D6.

   ECM/PCM CONNECTOR D (17P)

   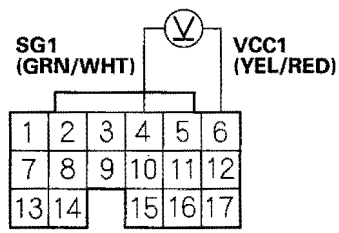

   Wire side of female terminals

   Is there about 5 V?

   YES – Repair open in the wire between the ECM/PCM (D6) and the MAP sensor, then go to step 15.

   NO – Go to step 20.

Protected by APR

9. Turn the ignition switch OFF.
10. Jump the SCS line with the HDS.
11. Disconnect ECM/PCM connector D (17P).
12. Check for continuity between MAP sensor 3P connector terminal No. 2 and body ground.

MAP SENSOR 3P CONNECTOR

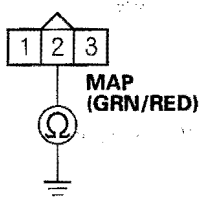

Wire side of female terminals

Is there continuity?

YES—Repair short in the wire between the ECM/PCM (D5) and the MAP sensor, then go to step 15.

NO—Go to step 20.

13. Turn the ignition switch OFF.
14. Replace the MAP sensor (see page 11-278).
15. Reconnect all connectors.
16. Turn the ignition switch ON (II).
17. Reset the ECM/PCM with the HDS.
18. Do the ECM/PCM idle learn procedure (see page 11-239).
19. Check for Temporary DTCs or DTCs with the HDS.

Are any Temporary DTCs or DTCs indicated?

YES—If DTC P0107 is indicated, check for poor connections or loose terminals at the MAP sensor and the ECM/PCM, then go to step 1. If any other Temporary DTCs or DTCs are indicated, go to the indicated DTC's troubleshooting.

NO—Troubleshooting is complete. ■

20. Update the ECM/PCM if it does not have the latest software, or substitute a known-good ECM/PCM (see page 11-6).
21. Check for Temporary DTCs or DTCs with the HDS.

Are any Temporary DTCs or DTCs indicated?

YES—If DTC P0107 is indicated, check for poor connections or loose terminals at the MAP sensor and the ECM/PCM, then go to step 1. If any other Temporary DTCs or DTCs are indicated, go to the indicated DTC's troubleshooting.

NO—If the ECM/PCM was updated, troubleshooting is complete. If the ECM/PCM was substituted, replace the original ECM/PCM (see page 11-171). ■

Protected by A.R.

DTC Troubleshooting (cont'd)

DTC P0108: MAP Sensor Circuit High Voltage

1. Turn the ignition switch ON (II).
2. Check the MAP SENSOR in the DATA LIST with the HDS.

   Is about 160 kPa (47.1 in.Hg, 1,197 mmHg), 4.49 V or more indicated?

   YES – Go to step 3.

   NO – Intermittent failure, system is OK at this time. Check for poor connections or loose terminals at the MAP sensor and the ECM/PCM. ■
3. Turn the ignition switch OFF.
4. Disconnect the MAP sensor 3P connector.
5. Connect MAP sensor 3P connector terminals No. 2 and No. 3 with a jumper wire.

MAP SENSOR 3P CONNECTOR

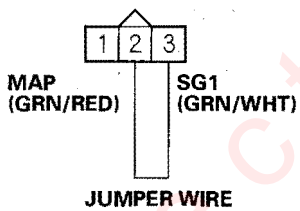

Wire side of female terminals

6. Turn the ignition switch ON (II).
7. Check the MAP SENSOR in the DATA LIST with the HDS.

   Is about 160 kPa (47.1 in.Hg, 1,197 mmHg), 4.49 V or more indicated?

   YES – Go to step 8.

   NO – Go to step 14.
8. Remove the jumper wire.
9. Measure voltage between MAP sensor 3P connector terminals No. 1 and No. 3.

MAP SENSOR 3P CONNECTOR

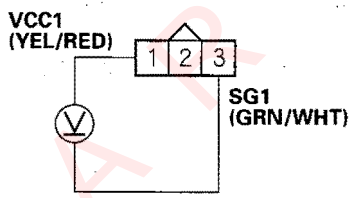

Wire side of female terminals

Is there about 5 V?

YES – Go to step 10.

NO – Repair open in the wire between the ECM/PCM (D4) and the MAP sensor, then go to step 16.

10. Turn the ignition switch OFF.
11. Connect ECM/PCM connector terminals D4 and D5 with a jumper wire.

ECM/PCM CONNECTOR D (17P)

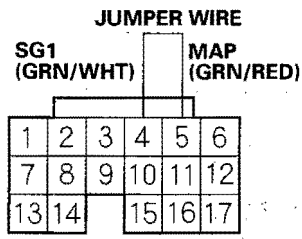

Wire side of female terminals

Protected by AR

12. Turn the ignition switch ON (II).

13. Check the MAP SENSOR in the DATA LIST with the HDS.

    Is about 160 kPa (47.1 in.Hg, 1,197 mmHg), 4.49 V or more indicated?

    YES – Go to step 20.

    NO – Repair open in the wire between the ECM/PCM (D5) and the MAP sensor, then go to step 16.

14. Turn the ignition switch OFF.

15. Replace the MAP sensor (see page 11-278).

16. Turn the ignition switch ON (II).

17. Reset the ECM/PCM with the HDS.

18. Do the ECM/PCM idle learn procedure (see page 11-239).

19. Check for Temporary DTCs or DTCs with the HDS.

    Are any Temporary DTCs or DTCs indicated?

    YES – If DTC P0108 is indicated, check for poor connections or loose terminals at the MAP sensor and the ECM/PCM, then go to step 1. If any other Temporary DTCs or DTCs are indicated, go to the indicated DTC's troubleshooting.

    NO – Troubleshooting is complete. ■

20. Update the ECM/PCM if it does not have the latest software, or substitute a known-good ECM/PCM (see page 11-6).

21. Check for Temporary DTCs or DTCs with the HDS.

    Are any Temporary DTCs or DTCs indicated?

    YES – If DTC P0108 is indicated, check for poor connections or loose terminals at the MAP sensor and the ECM/PCM, then go to step 1. If any other Temporary DTCs or DTCs are indicated, go to the indicated DTC's troubleshooting.

    NO – If the ECM/PCM was updated, troubleshooting is complete. If the ECM/PCM was substituted, replace the original ECM/PCM (see page 11-171). ■

Protected by AR

DTC Troubleshooting (cont'd)

DTC P1128: MAP Sensor Signal Lower Than Expected

1. Turn the ignition switch ON (II).
2. Check the MAP SENSOR in the DATA LIST with the HDS.

   Is there less than 54.1 kPa (16.0 in.Hg, 406 mmHg) or 1.61 V held for more than 5 seconds?

   YES—Go to step 6.

   NO—Go to step 3.
3. Clear the DTC with the HDS.
4. Start the engine. Hold the engine speed at 3,000 rpm with no load (in Park or neutral) until the radiator fan comes on, then let it idle.
5. Test-drive under these conditions:

   - Engine coolant temperature more than 158°F (70°C)
   - Engine speed between 1,400 and 6,500 rpm
   - A/T in D position (M/T in 3rd gear)
   - Vehicle speed accelerated from 16 mph (25 km/h) to 31 mph (50 km/h) under half throttle.
6. Monitor the OBD STATUS for DTC P1128 in the DTCs MENU with the HDS.

   Does the screen indicate FAILED?

   YES—Go to step 7.

   NO—If the screen indicates PASSED, intermittent failure, system is OK at this time. If the screen indicates NOT COMPLETED, go to step 4 and recheck.
7. Turn the ignition switch OFF.
8. Replace the MAP sensor (see page 11-278).
9. Turn the ignition switch ON (II).
10. Reset the ECM/PCM with the HDS.
11. Do the ECM/PCM idle learn procedure (see page 11-239).
12. Start the engine. Hold the engine speed at 3,000 rpm with no load (in Park or neutral) until the radiator fan comes on, then let it idle.
13. Test-drive under these conditions:

    - Engine coolant temperature more than 158°F (70°C)
    - Engine speed between 1,400 and 6,500 rpm
    - A/T in D position (M/T in 3rd gear)
    - Vehicle speed accelerated from 16 mph (25 km/h) to 31 mph (50 km/h) under half throttle.
14. Check for Temporary DTCs or DTCs with the HDS.

    Are any Temporary DTCs or DTCs indicated?

    YES—If DTC P1128 is indicated, check for poor connections or loose terminals at the MAP sensor and the ECM/PCM, then go to step 1. If any other Temporary DTCs or DTCs are indicated, go to the indicated DTC's troubleshooting.

    NO—Go to step 15.
15. Monitor the OBD STATUS for DTC P1128 in the DTCs MENU with the HDS.

    Does the screen indicate PASSED?

    YES—Troubleshooting is complete.■

    NO—If the screen indicates FAILED, check for poor connections or loose terminals at the MAP sensor and the ECM/PCM, then go to step 1. If the screen indicates NOT COMPLETED, go to step 13 and recheck.

Protected by AP

DTC P1129: MAP Sensor Signal Higher than Expected

1. Check for vacuum leaks in these parts:

   - PCV valve
   - PCV hose
   - EVAP canister purge valve
   - Throttle body
   - Brake booster hose

   Are the parts OK?

   YES—Go to step 2.

   NO—Repair or replace parts with vacuum leaks, then go to step 9.

2. Start the engine. Hold the engine speed at 3,000 rpm with no load (in Park or neutral) until the radiator fan comes on, then let it idle.

3. Check the MAP SENSOR in the DATA LIST with the HDS.

   Is there more than 36.9 kPa (11.0 in.Hg, 277 mmHg) or 1.14 V held for more than 5 seconds?

   YES—Go to step 7.

   NO—Go to step 4.

4. Clear the DTC with the HDS.

5. Test-drive under these conditions:

   - Engine coolant temperature more than 158°F (70°C)
   - Engine speed between 1,400 and 6,500 rpm
   - A/T in D position (M/T in 5th gear)
   - Vehicle speed decelerated from more than 50 mph (80 km/h) with the throttle fully closed for at least 5 seconds

6. Monitor the OBD STATUS for DTC P1129 in the DTCs MENU with the HDS.

   Does the screen indicate FAILED?

   YES—Go to step 7.

   NO—If the screen indicates PASSED, intermittent failure, system is OK at this time. If the screen indicates NOT COMPLETED, go to step 5 and recheck.

7. Turn the ignition switch OFF.

8. Replace the MAP sensor (see page 11-278).

9. Turn the ignition switch ON (II).

10. Reset the ECM/PCM with the HDS.

11. Do the ECM/PCM idle learn procedure (see page 11-239).

12. Start the engine. Hold the engine speed at 3,000 rpm with no load (in Park or neutral) until the radiator fan comes on, then let it idle.

13. Test-drive under these conditions:

    - Engine coolant temperature more than 158°F (70°C)
    - Engine speed between 1,400 and 6,500 rpm
    - A/T in D position (M/T in 5th gear)
    - Vehicle speed decelerated from more than 50 mph (80 km/h) with the throttle fully closed for at least 5 seconds

14. Check for Temporary DTCs or DTCs with the HDS.

    Are any Temporary DTCs or DTCs indicated?

    YES—If DTC P1129 is indicated, check for poor connections or loose terminals at the MAP sensor and the ECM/PCM, then go to step 1. If any other Temporary DTCs or DTCs are indicated, go to the indicated DTC's troubleshooting.

    NO—Go to step 15.

(cont'd)

Protected by A

DTC Troubleshooting (cont'd)

15. Monitor the OBD STATUS for DTC P1129 in the DTCs MENU with the HDS.

    Does the screen indicate PASSED?

    YES—Troubleshooting is complete. ■

    NO—If the screen indicates FAILED, check for poor connections or loose terminals at the MAP sensor and the ECM/PCM, then go to step 1. If the screen indicates NOT COMPLETED, go to step 12 and recheck.

Protected by AR

DTC P0112: IAT Sensor Circuit Low Voltage

1. Turn the ignition switch ON (II).
2. Check the IAT SENSOR in the DATA LIST with the HDS.

   Is about 356°F (180°C) or higher, or 0.08 V or less indicated?

   YES—Go to step 3.

   NO—Intermittent failure, system is OK at this time. Check for poor connections or loose terminals at the IAT sensor and the ECM/PCM.■
3. Turn the ignition switch OFF.
4. Disconnect the IAT sensor 2P connector.
5. Turn the ignition switch ON (II).
6. Check the IAT SENSOR in the DATA LIST with the HDS.

   Is about 356°F (180°C) or higher, or 0.08 V or less indicated?

   YES—Go to step 7.

   NO—Go to step 11.
7. Turn the ignition switch OFF.
8. Jump the SCS line with the HDS.
9. Disconnect ECM/PCM connector D (17P).
10. Check for continuity between IAT sensor 2P connector terminal No. 1 and body ground.

IAT SENSOR 2P CONNECTOR

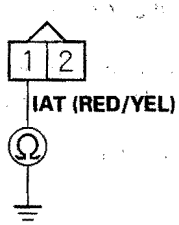

Wire side of female terminals

Is there continuity?

YES—Repair short in the wire between the IAT sensor and ECM/PCM (D16), then go to step 13.

NO—Go to step 18.

11. Turn the ignition switch OFF.
12. Replace the IAT sensor (see page 11-167).
13. Reconnect all connectors.
14. Turn the ignition switch ON (II).
15. Reset the ECM/PCM with the HDS.
16. Do the ECM/PCM idle learn procedure (see page 11-239).
17. Check for Temporary DTCs or DTCs with the HDS.

    Are any Temporary DTCs or DTCs indicated?

    YES—If DTC P0112 is indicated, check for poor connections or loose terminals at the IAT sensor and the ECM/PCM, then go to step 1. If any other Temporary DTCs or DTCs are indicated, go to the indicated DTC's troubleshooting.

    NO—Troubleshooting is complete.■
18. Update the ECM/PCM if it does not have the latest software, or substitute a known-good ECM/PCM (see page 11-6).
19. Check for Temporary DTCs or DTCs with the HDS.

    Are any Temporary DTCs or DTCs indicated?

    YES—If DTC P0112 is indicated, check for poor connections or loose terminals at the IAT sensor and the ECM/PCM, then go to step 1. If any other Temporary DTCs or DTCs are indicated, go to the indicated DTC's troubleshooting.

    NO—If the ECM/PCM was updated, troubleshooting is complete. If the ECM/PCM was substituted, replace the original ECM/PCM (see page 11-171).■

Protected by AP

DTC Troubleshooting (cont'd)

DTC P0113: IAT Sensor Circuit High Voltage

1. Turn the ignition switch ON (II).
2. Check the IAT SENSOR in the DATA LIST with the HDS.

   Is about −40°F (−40°C) or less, or 4.90 V or higher indicated?

   YES—Go to step 3.

   NO—Intermittent failure, system is OK at this time. Check for poor connections or loose terminals at the IAT sensor and the ECM/PCM. ■
3. Turn the ignition switch OFF.
4. Disconnect the IAT sensor 2P connector.
5. Connect IAT sensor 2P connector terminals No. 1 and No. 2 with a jumper wire.

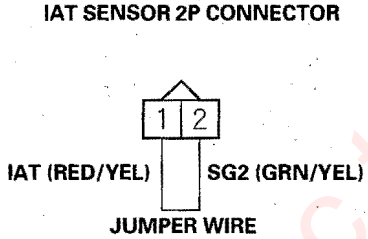

6. Turn the ignition switch ON (II).
7. Check the IAT SENSOR in the DATA LIST with the HDS.

   Is about −40°F (−40°C) or less, or 4.90 V or higher indicated?

   YES—Go to step 8.

   NO—Go to step 13.
8. Turn the ignition switch OFF.
9. Remove the jumper wire.
10. Turn the ignition switch ON (II).
11. Measure voltage between IAT sensor 2P connector terminal No. 1 and body ground.

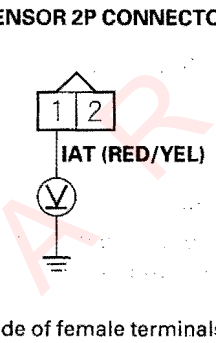

   Is there about 5 V?

   YES—Repair open in the wire between the ECM/PCM (D10) and the IAT sensor, then go to step 15.

   NO—Go to step 12.
12. Measure voltage between ECM/PCM connector terminal D16 and body ground.

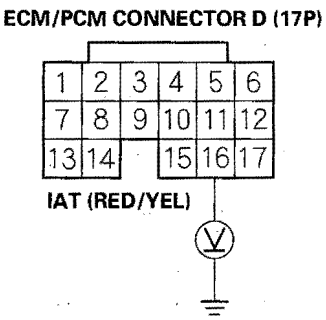

   Is there about 5 V?

   YES—Repair open in the wire between the ECM/PCM (D16) and the IAT sensor, then go to step 15.

   NO—Go to step 19.

Protected by AR

13. Turn the ignition switch OFF.

14. Replace the IAT sensor (see page 11-167).

15. Turn the ignition switch ON (II).

16. Reset the ECM/PCM with the HDS.

17. Do the ECM/PCM idle learn procedure (see page 11-239).

18. Check for Temporary DTCs or DTCs with the HDS.

    Are any Temporary DTCs or DTCs indicated?

    YES—If DTC P0113 is indicated, check for poor connections or loose terminals at the IAT sensor and the ECM/PCM, then go to step 1. If any other Temporary DTCs or DTCs are indicated, go to the indicated DTC's troubleshooting.

    NO—Troubleshooting is complete.■

19. Update the ECM/PCM if it does not have the latest software, or substitute a known-good ECM/PCM (see page 11-6).

20. Check for Temporary DTCs or DTCs with the HDS.

    Are any Temporary DTCs or DTCs indicated?

    YES—If DTC P0113 is indicated, check for poor connections or loose terminals at the IAT sensor and the ECM/PCM, then go to step 1. If any other Temporary DTCs or DTCs are indicated, go to the indicated DTC's troubleshooting.

    NO—If the ECM/PCM was updated, troubleshooting is complete. If the ECM/PCM was substituted, replace the original ECM/PCM (see page 11-171).■

Protected by AR

DTC Troubleshooting (cont'd)

DTC P0116: ECT Sensor Range/Performance Problem

1. Turn the ignition switch ON (II).
2. Check the ECT SENSOR in the DATA LIST with the HDS.

   Is about 176°F (80°C) or higher, or 0.86 V or less indicated?

   YES—Go to step 3.

   NO—Go to step 7.
3. Note the current coolant temperature.
4. Turn the ignition switch OFF.
5. Let the engine cool off for 1 hour.
6. Check the ECT SENSOR in the DATA LIST with the HDS.

   Did the ECT change 3.6°F (2°C) or more?

   YES—Intermittent failure, system is OK at this time. Check the thermostat and the cooling system (see page 10-4).■

   NO—Go to step 10.
7. Note the current coolant temperature.
8. Start the engine. Hold the engine speed at 3,000 rpm with no load (in Park or neutral) until the radiator fan comes on, then let it idle.
9. Check the ECT SENSOR in the DATA LIST with the HDS.

   Does the ECT change 3.6°F (2°C) or more?

   YES—Intermittent failure, system is OK at this time. Check the thermostat and the cooling system (see page 10-4).■

   NO—Go to step 10.
10. Turn the ignition switch OFF.
11. Replace the ECT sensor (see page 11-167).
12. Turn the ignition switch ON (II).
13. Reset the ECM/PCM with the HDS.
14. Do the ECM/PCM idle learn procedure (see page 11-239).
15. Allow the engine to cool to between 23°F (−5°C) and 77°F (25°C).
16. Start the engine, and let it idle for 20 minutes.
17. Check for Temporary DTCs or DTCs with the HDS.

    Are any Temporary DTCs or DTCs indicated?

    YES—If DTC P0116 is indicated, check for poor connections or loose terminals at the ECT sensor and the ECM/PCM, then go to step 1. If any other Temporary DTCs or DTCs are indicated, go to the indicated DTC's troubleshooting.

    NO—Go to step 18.
18. Monitor the OBD STATUS for DTC P0116 in the DTCs MENU with the HDS.

    Does the screen indicate PASSED?

    YES—Troubleshooting is complete.■

    NO—If the screen indicates FAILED, check for poor connections or loose terminals at the ECT sensor and the ECM/PCM, then go to step 1. If the screen indicates NOT COMPLETED, go to step 15 and recheck.

Protected by AR

DTC P0117: ECT Sensor Circuit Low Voltage

1. Turn the ignition switch ON (II).
2. Check the ECT SENSOR in the DATA LIST with the HDS.

   Is about 356°F (180°C) or higher, or 0.08 V or less indicated?

   YES – Go to step 3.

   NO – Intermittent failure, system is OK at this time. Check for poor connections or loose terminals at the ECT sensor and the ECM/PCM. ■
3. Turn the ignition switch OFF.
4. Disconnect the ECT sensor 2P connector.
5. Turn the ignition switch ON (II).
6. Check the ECT SENSOR in the DATA LIST with the HDS.

   Is about 356°F (180°C) or higher, or 0.08 V or less indicated?

   YES – Go to step 7.

   NO – Go to step 11.
7. Turn the ignition switch OFF.
8. Jump the SCS line with the HDS.
9. Disconnect ECM/PCM connector D (17P).
10. Check for continuity between ECT sensor 2P connector terminal No. 1 and body ground.

ECT SENSOR 2P CONNECTOR

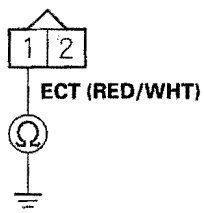

Wire side of female terminals

Is there continuity?

YES – Repair short in the wire between the ECT sensor and ECM/PCM (D17), then go to step 13.

NO – Go to step 18.

11. Turn the ignition switch OFF.
12. Replace the ECT sensor (see page 11-167).
13. Reconnect all connectors.
14. Turn the ignition switch ON (II).
15. Reset the ECM/PCM with the HDS.
16. Do the ECM/PCM idle learn procedure (see page 11-239).
17. Check for Temporary DTCs or DTCs with the HDS.

    Are any Temporary DTCs or DTCs indicated?

    YES – If DTC P0117 is indicated, check for poor connections or loose terminals at the ECT sensor and the ECM/PCM, then go to step 1. If any other Temporary DTCs or DTCs are indicated, go to the indicated DTC's troubleshooting.

    NO – Troubleshooting is complete. ■
18. Update the ECM/PCM if it does not have the latest software, or substitute a known-good ECM/PCM (see page 11-6).
19. Check for Temporary DTCs or DTCs with the HDS.

    Are any Temporary DTCs or DTCs indicated?

    YES – If DTC P0117 is indicated, check for poor connections or loose terminals at the ECT sensor and the ECM/PCM, then go to step 1. If any other Temporary DTCs or DTCs are indicated, go to the indicated DTC's troubleshooting.

    NO – If the ECM/PCM was updated, troubleshooting is complete. If the ECM/PCM was substituted, replace the original ECM/PCM (see page 11-171). ■

Protected by AP

DTC Troubleshooting (cont'd)

DTC P0118: ECT Sensor Circuit High Voltage

1. Turn the ignition switch ON (II).
2. Check the ECT SENSOR in the DATA LIST with the HDS.

   Is about −40°F (−40°C) or less, or 4.90 V or higher indicated?

   YES—Go to step 3.

   NO—Intermittent failure, system is OK at this time. Check for poor connections or loose terminals at the ECT sensor and the ECM/PCM. ■
3. Turn the ignition switch OFF.
4. Disconnect the ECT sensor 2P connector.
5. Connect ECT sensor 2P connector terminals No.1 and No. 2 with a jumper wire.

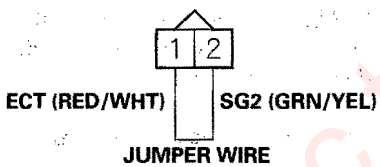

Wire side of female terminals

6. Turn the ignition switch ON (II).
7. Check the ECT SENSOR in the DATA LIST with the HDS.

   Is about −40°F (−40°C) or less, or 4.90 V or higher indicated?

   YES—Go to step 8.

   NO—Go to step 13.
8. Turn the ignition switch OFF.
9. Remove the jumper wire.
10. Turn the ignition switch ON (II).
11. Measure voltage between ECT sensor 2P connector terminal No.1 and body ground.

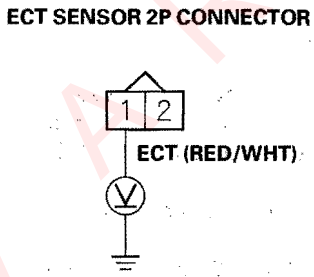

Wire side of female terminals

Is there about 5 V?

YES—Repair open in the wire between the ECM/PCM (D10) and the ECT sensor, then go to step 15.

NO—Go to step 12.

12. Measure voltage between ECM/PCM connector terminal D17 and body ground.

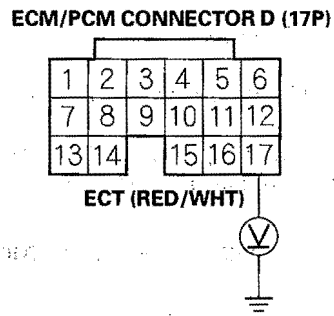

Wire side of female terminals

Is there about 5 V?

YES—Repair open in the wire between the ECM/PCM (D17) and the ECT sensor, then go to step 15.

NO—Go to step 19.

Protected by AR

13. Turn the ignition switch OFF.

14. Replace the ECT sensor (see page 11-167).

15. Turn the ignition switch ON (II).

16. Reset the ECM/PCM with the HDS.

17. Do the ECM/PCM idle learn procedure (see page 11-239).

18. Check for Temporary DTCs or DTCs with the HDS.

    Are any Temporary DTCs or DTCs indicated?

    YES—If DTC P0118 is indicated, check for poor connections or loose terminals at the ECT sensor and the ECM/PCM, then go to step 1. If any other Temporary DTCs or DTCs are indicated, go to the indicated DTC's troubleshooting.

    NO—Troubleshooting is complete.■

19. Update the ECM/PCM if it does not have the latest software, or substitute a known-good ECM/PCM (see page 11-6).

20. Check for Temporary DTCs or DTCs with the HDS.

    Are any Temporary DTCs or DTCs indicated?

    YES—If DTC P0118 is indicated, check for poor connections or loose terminals at the ECT sensor and the ECM/PCM, then go to step 1. If any other Temporary DTCs or DTCs are indicated, go to the indicated DTC's troubleshooting.

    NO—If the ECM/PCM was updated, troubleshooting is complete. If the ECM/PCM was substituted, replace the original ECM/PCM (see page 11-171).■

Protected by AR

DTC Troubleshooting (cont'd)

DTC P0125: ECT Sensor Slow Response

1. Start the engine, and let it idle.
2. Check the ECT SENSOR in the DATA LIST with the HDS.

   Is about 86°F (30°C) or less, or 2.61 V or higher indicated?

   YES — Go to step 3.

   NO — Intermittent failure, system is OK at this time. Check the thermostat and the cooling system. ■
3. Let the engine idle for 6 minutes.
4. Check the ECT SENSOR in the DATA LIST with the HDS.

   Is about 86°F (30°C) or less, or 2.61 V or higher indicated?

   YES — Go to step 5.

   NO — Intermittent failure, system is OK at this time. Check the thermostat and the cooling system. ■
5. Turn the ignition switch OFF.
6. Replace the ECT sensor (see page 11-167).
7. Turn the ignition switch ON (II).
8. Reset the ECM/PCM with the HDS.
9. Do the ECM/PCM idle learn procedure (see page 11-239).
10. Allow the engine to cool to between 23°F (−5°C) and 77°F (25°C).
11. Start the engine, and let it idle for 20 minutes.
12. Check for Temporary DTCs or DTCs with the HDS.

    Are any Temporary DTCs or DTCs indicated?

    YES — If DTC P0125 is indicated, check for poor connections or loose terminals at the ECT sensor and the ECM/PCM, then go to step 1. If any other Temporary DTCs or DTCs are indicated, go to the indicated DTC's troubleshooting.

    NO — Go to step 13.
13. Monitor the OBD STATUS for DTC P0125 in the DTCs MENU with the HDS.

    Does the screen indicate PASSED?

    YES — Troubleshooting is complete. ■

    NO — If the screen indicates FAILED, check for poor connections or loose terminals at the ECT sensor and the ECM/PCM, then go to step 1. If the screen indicates NOT COMPLETED, go to step 10 and recheck.

Protected by A R

DTC P0128: Cooling System Malfunction

NOTE: If the DTCs listed below are stored at the same time as DTC P0128, troubleshoot those DTCs first, then recheck for P0128.

P0112, P0113: Intake air temperature (IAT) sensor
P0116, P0117, P0118: Engine coolant temperature (ECT) sensor
P0300: Random misfire
P0301, P0302, P0303, P0304: No. 1, No. 2, No. 3, No. 4, No. 5, or No. 6 cylinder misfire
P0335, P0339: Crankshaft position (CKP) sensor A
P0385, P0389: Crankshaft position (CKP) sensor B
P2227, P2228, P2229: Barometric pressure (BARO) sensor
P2646, P2647, P2648, P2649: VTEC system
P0506, P0507: Idle control system malfunction
DTC P0128 can occasionally set when the hood is opened while the engine is running.

1. Turn the ignition switch ON (II).
2. Clear the DTC with the HDS.
3. Turn the blower switch OFF.
4. Turn the A/C switch OFF.
5. Check the FAN CTRL in the DATA LIST with the HDS.

   Is it OFF?

   YES—Go to step 6.

   NO—Wait until the FAN CTRL is turned off, then go to step 6.
6. Check the ECT SENSOR in the DATA LIST with the HDS, then check the radiator fan operation.

   Does the radiator fan keep running when the engine coolant temperature less than 158°F (70°C)?

   YES—Check the radiator fan low speed circuit (see page 21-52), the radiator fan high speed circuit (see page 10-14), and the radiator fan relay (see page 22-75). If the circuits and the relay are OK, go to step 21.

   NO—Go to step 7.
7. Start the engine. Hold the engine speed at 3,000 rpm with no load (in Park or neutral) until the radiator fan comes on, then let it idle.
8. Turn the ignition switch OFF.
9. Turn the ignition switch ON (II).
10. Do the RADIATOR FAN TEST in the INSPECTION MENU with the HDS for 20 minutes.
11. Check the ECT SENSOR in the DATA LIST with the HDS.

    Is about 140°F (60°C) or less, or 1.25 V or more indicated?

    YES—Intermittent failure, system is OK at this time.■

    NO—Go to step 12.
12. Turn the ignition switch OFF.
13. Cool down the engine until the coolant temperature is between 23°F (−5°C) and 95°F (35°C).
14. Replace the thermostat (see page 10-8).
15. Turn the ignition switch ON (II).

(cont'd)

Protected by ARK

DTC Troubleshooting (cont'd)

16. Reset the ECM/PCM with the HDS.

17. Do the ECM/PCM idle learn procedure (see page 11-239).

18. Start the engine. Hold the engine speed at 3,000 rpm with no load (in Park or neutral) until the radiator fan comes on, then let it idle.

19. Check for Temporary DTCs or DTCs with the HDS.

    Are any Temporary DTCs or DTCs indicated?

    YES—If DTC P0128 is indicated, check the cooling system, then go to step 1. If any other Temporary DTCs or DTCs are indicated, go to the indicated DTC's troubleshooting.

    NO—Go to step 20.

20. Monitor the OBD STATUS for DTC P0128 in the DTCs MENU with the HDS.

    Does the screen indicate PASSED?

    YES—Troubleshooting is complete.■

    NO—If the screen indicates FAILED, check the cooling system, then go to step 1. If the screen indicates NOT COMPLETED, go to step 18 and recheck.

21. Update the ECM/PCM if it does not have the latest software, or substitute a known-good ECM/PCM (see page 11-6).

22. Cool down the engine until the coolant temperature is between 23°F (−5°C) and 95°F (35°C).

23. Start the engine. Hold the engine speed at 3,000 rpm with no load (in Park or neutral) until the radiator fan comes on, then let it idle.

24. Check for a Temporary DTCs or DTCs with the HDS.

    Are any Temporary DTCs or DTCs indicated?

    YES—If DTC P0128 is indicated, check for poor connections or loose terminals at the ECT sensor and the ECM/PCM, then go to step 1. If any other Temporary DTCs or DTCs are indicated, go to the indicated DTC's troubleshooting.

    NO—If the ECM/PCM was updated, troubleshooting is complete. If the ECM/PCM was substituted, replace the original ECM/PCM (see page 11-171).■

Protected by AR

DTC P0133: Rear A/F Sensor (Bank 1, Sensor 1) Circuit Slow Response

DTC P0153: Front A/F Sensor (Bank 2, Sensor 1) Circuit Slow Response

NOTE:
- If DTC P0139 and/or P0159* is stored at the same time as DTC P0133 and/or P0153*, troubleshoot DTC P0139 and/or P0159* first, then recheck for DTC P0133 and/or P0153*.
- Information marked with an asterisk (*) applies to the front bank (Bank 2).

1. Turn the ignition switch ON (II).
2. Clear the DTC with the HDS.
3. Start the engine. Hold the engine speed at 3,000 rpm with no load (in Park or neutral) until the radiator fan comes on, then let it idle.
4. Test-drive under these conditions:
   - Engine coolant temperature more than 158°F (70°C)
   - A/T in D position (M/T in 5th gear)
   - Vehicle speed at 30 mph (48 km/h) or more, and engine speed between 1,350 and 2,350 rpm
5. Monitor the OBD STATUS for DTC P0133 and/or P0153* in the DTCs MENU with the HDS.

   Does the screen indicate FAILED?

   YES—Go to step 6.

   NO—If the screen indicates PASSED, intermittent failure, system is OK at this time. If the screen indicates EXECUTING, keep driving until a result comes on. If the screen indicates OUT OF CONDITION, go to step 3 and recheck.
6. Turn the ignition switch OFF.
7. Replace the A/F sensor (Sensor 1) (see page 11-165).
8. Turn the ignition switch ON (II).
9. Reset the ECM/PCM with the HDS.
10. Do the ECM/PCM idle learn procedure (see page 11-239).
11. Test-drive under these conditions:
    - Engine coolant temperature more than 158°F (70°C)
    - A/T in D position (M/T in 5th gear)
    - Vehicle speed at 30 mph (48 km/h) or more, and engine speed between 1,350 and 2,350 rpm
12. Check for Temporary DTCs or DTCs with the HDS.

    Are any Temporary DTCs or DTCs indicated?

    YES—If DTC P0133 and/or P0153* is indicated, check for poor connections or loose terminals at the A/F sensor (Sensor 1) and the ECM/PCM, then go to step 1. If any other Temporary DTCs or DTCs are indicated, go to the indicated DTC's troubleshooting.

    NO—Go to step 13.
13. Monitor the OBD STATUS for DTC P0133 and/or P0153* in the DTCs MENU with the HDS.

    Does the screen indicate PASSED?

    YES—Troubleshooting is complete.■

    NO—If the screen indicates FAILED, check for poor connections or loose terminals at the A/F sensor (Sensor 1) and the ECM/PCM, then go to step 1. If the screen indicates EXECUTING, keep driving until a result comes on. If the screen indicates OUT OF CONDITION, go to step 11 and recheck.

Protected by A R

DTC Troubleshooting (cont'd)

DTC P0134: Rear A/F Sensor (Bank 1, Sensor 1) Heater System Malfunction

DTC P0154: Front A/F Sensor (Bank 2, Sensor 1) Heater System Malfunction

NOTE:
- If DTC P2251, P2237, P2240* and/or P2254* is stored at the same time as DTC P0134 and/or P0154*, troubleshoot DTC P2251, P2237, P2240* and/or P2254* first, then recheck for P0134 and/or P0154*.
- Information marked with an asterisk (*) applies to the front bank (Bank 2).

1. Turn the ignition switch ON (II).
2. Clear the DTC with the HDS.
3. Start the engine with no load (in Park or neutral) until the radiator fan comes on, then let it idle.
4. Check for Temporary DTCs or DTCs with the HDS.

   Is DTC P0134 and/or P0154 indicated?*

   YES—Go to step 5.

   NO—Intermittent failure, system is OK at this time. Check for poor connections or loose terminals at the A/F sensor (Sensor 1) and the ECM/PCM. ■
5. Turn the ignition switch OFF.
6. Replace the A/F sensor (Sensor 1) (see page 11-165).
7. Turn the ignition switch ON (II).
8. Reset the ECM/PCM with the HDS.
9. Do the ECM/PCM idle learn procedure (see page 11-239).
10. Check for Temporary DTCs or DTCs with the HDS.

    Are any Temporary DTCs or DTCs indicated?

    YES—If DTC P0134 and/or P0154* is indicated, check for poor connections or loose terminals at the A/F sensor (Sensor 1) and the ECM/PCM, then go to step 1. If any other Temporary DTCs or DTCs are indicated, go to the indicated DTC's troubleshooting.

    NO—Go to step 11.
11. Monitor the OBD STATUS for DTC P0134 and/or P0154* in the DTCs MENU with the HDS.

    Does the screen indicate PASSED?

    YES—Troubleshooting is complete. ■

    NO—If the screen indicates FAILED, check for poor connections or loose terminals at the A/F sensor (Sensor 1) and the ECM/PCM, then go to step 1. If the screen indicates NOT COMPLETED, go to step 10 and recheck.

Protected by A R

DTC P0135: Rear A/F Sensor (Bank 1, Sensor 1) Heater Circuit Malfunction

DTC P0155: Front A/F Sensor (Bank 2, Sensor 1) Heater Circuit Malfunction

NOTE: Information marked with an asterisk (*) applies to the front bank (Bank 2).

1. Turn the ignition switch ON (II).
2. Clear the DTC with the HDS.
3. Start the engine.
4. Check for Temporary DTCs or DTCs with the HDS.

   Is DTC P0135 and/or P0155 indicated?*

   YES – Go to step 5.

   NO – Intermittent failure, system is OK at this time. Check for poor connections or loose terminals at the A/F sensor (Sensor 1) and the ECM/PCM. ■
5. Turn the ignition switch OFF.
6. Check these fuses:

   - No. 19 FI ECU (ECM/PCM) (40A) fuse in the under-hood fuse/relay box.
   - No. 4 LAF (A/F SENSOR) (15A) fuse in the under-dash fuse/relay box.
   - No. 23 IGP (7.5A) fuse in the under-dash fuse/relay box.

   Are any of the fuses blown?

   YES – Repair short in the wire between the A/F sensors, secondary HO2S, A/F sensor relay, and the fuses, then go to step 23.

   NO – Go to step 7.
7. Disconnect the A/F sensor (Sensor 1) 8P connector.
8. At the sensor side, measure resistance between the A/F sensor (Sensor 1) 8P connector terminals No. 1 and No. 2.

A/F SENSOR (SENSOR 1) 8P CONNECTOR

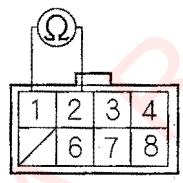

Terminal side of male terminals

Is there 2.5 – 3.2 Ω at room temperature?

YES – Go to step 9.

NO – Go to step 22.

9. Check for continuity between each terminal at the A/F sensor (Sensor 1) 8P connector and body ground.

A/F SENSOR (SENSOR 1) 8P CONNECTOR

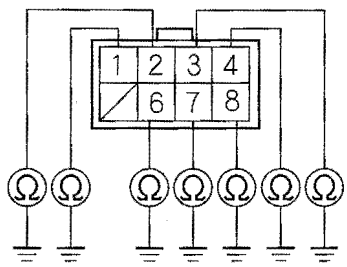

Terminal side of male terminals

Is there continuity?

YES – Go to step 22.

NO – Go to step 10.

(cont'd)

Protected by AR

DTC Troubleshooting (cont'd)

10. Check for continuity between the A/F sensor (Sensor 1) 8P connector terminals No. 1 and No. 3, No. 4, No. 6, No. 7, and No. 8 individually.

A/F SENSOR (SENSOR 1) 8P CONNECTOR

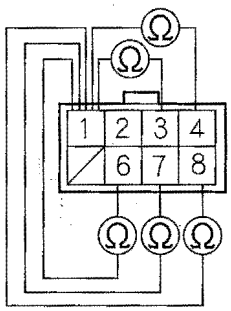

Terminal side of male terminals

Is there continuity?

YES—Go to step 22.

NO—Go to step 11.

11. Jump the SCS line with the HDS.

12. Disconnect ECM/PCM connector E (31P).

13. Check for continuity between ECM/PCM connector terminal E7 (E6)* and body ground.

ECM/PCM CONNECTOR E (31P)

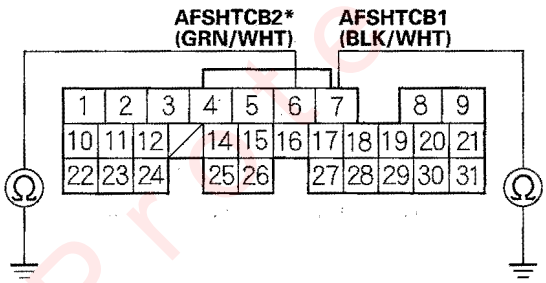

Wire side of female terminals

Is there continuity?

YES—Repair short in the wire between the ECM/PCM (E7 (E6)*) and the A/F sensor (Sensor 1), then go to step 23.

NO—Go to step 14.

14. Connect A/F sensor (Sensor 1) 8P connector terminal No. 2 to body ground with a jumper wire.

A/F SENSOR (SENSOR 1) 8P CONNECTOR

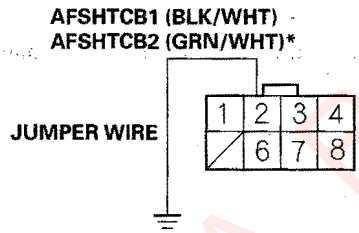

Wire side of female terminals

15. Check for continuity between ECM/PCM connector terminal E7 (E6)* and body ground.

ECM/PCM CONNECTOR E (31P)

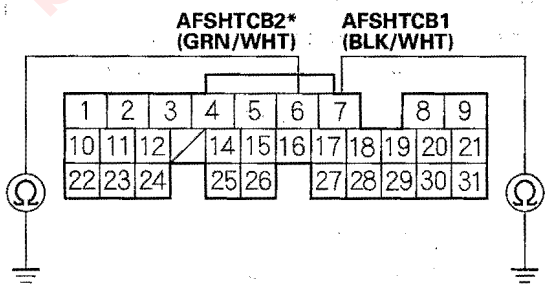

Wire side of female terminals

Is there continuity?

YES—Go to step 16.

NO—Repair open in the wire between the ECM/PCM (E7 (E6)*) and the A/F sensor (Sensor 1), then go to step 23.

Protected by AR

16. Connect A/F sensor (Sensor 1) 8P connector terminal No. 1 to body ground with a jumper wire.

A/F SENSOR (SENSOR 1) 8P CONNECTOR

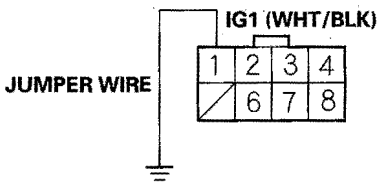

Wire side of female terminals

17. Remove the A/F sensor relay (A).

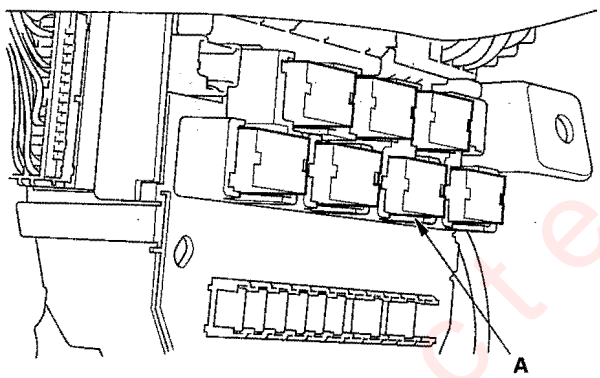

18. Check for continuity between A/F sensor relay terminal No. 2 and body ground.

A/F SENSOR RELAY 4P CONNECTOR

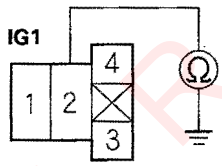

Terminal side of female terminals

Is there continuity?

YES – Go to step 19.

NO – Repair open in the wire between the A/F sensor (Sensor 1) and the A/F sensor relay, then go to step 23.

19. Disconnect ECM/PCM connector A (31P).

(cont'd)

Protected by AR

DTC Troubleshooting (cont'd)

20. Check for continuity between ECM/PCM connector terminal A4 and A/F sensor relay terminal No. 4.

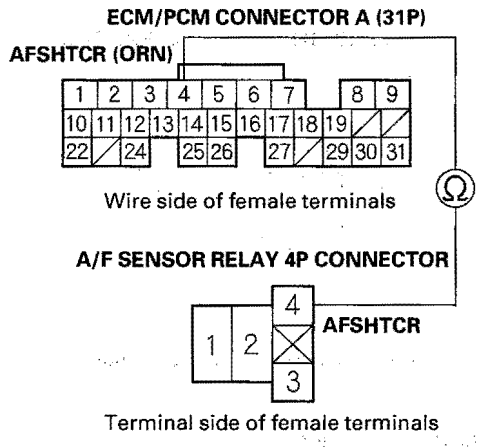

Is there continuity?

YES—Go to step 21.

NO—Repair open in the wire between the ECM/PCM (A4) and the A/F sensor relay, then go to step 23.

21. Check the A/F sensor relay (see page 22-75).

Is the A/F sensor relay OK?

YES—Go to step 28.

NO—Replace the A/F sensor relay, then go to step 23.

22. Replace the A/F sensor (Sensor 1) (see page 11-165).

23. Turn the ignition switch ON (II).

24. Reset the ECM/PCM with the HDS.

25. Do the ECM/PCM idle learn procedure (see page 11-239).

26. Check for Temporary DTCs or DTCs with the HDS.

Are any Temporary DTCs or DTCs indicated?

YES—If DTC P0135 and/or P0155* is indicated, check for poor connections or loose terminals at the A/F sensor (Sensor 1) and the ECM/PCM, then go to step 1. If any other Temporary DTCs or DTCs are indicated, go to the indicated DTC's troubleshooting.

NO—Go to step 27.

27. Monitor the OBD STATUS for DTC P0135 and/or P0155* in the DTCs MENU with the HDS.

Does the screen indicate PASSED?

YES—Troubleshooting is complete.■

NO—If the screen indicates FAILED, check for poor connections or loose terminals at the A/F sensor (Sensor 1) and the ECM/PCM, then go to step 1. If the screen indicates NOT COMPLETED, go to step 25 and recheck.

28. Update the ECM/PCM if it does not have the latest software, or substitute a known-good ECM/PCM (see page 11-6).

29. Check for Temporary DTCs or DTCs with the HDS.

Are any Temporary DTCs or DTCs indicated?

YES—If DTC P0135 and/or P0155* is indicated, check for poor connections or loose terminals at the A/F sensor (Sensor 1) and the ECM/PCM, then go to step 1. If any other Temporary DTCs or DTCs are indicated, go to the indicated DTC's troubleshooting.

NO—If the ECM/PCM was updated, troubleshooting is completed. If the ECM/PCM was substituted, replace the original ECM/PCM (see page 11-171).■

Protected by A R

DTC P2195: Rear A/F Sensor (Bank 1, Sensor 1) Signal Stuck Lean

DTC P2197: Front A/F Sensor (Bank 2, Sensor 1) Signal Stuck Lean

NOTE:
- Information marked with an asterisk (*) applies to the front bank (Bank 2).
- If the vehicle was out of fuel and the engine stalled before this DTC was stored, refuel and clear the DTC with the HDS.
- If DTC P2101, P2108, P2118, P2135, P2176, U0107 or a combination of P2122 and P2127, P2122 and P2128 or P2127 and P2128 is stored at the same time as DTC P2195 (P2197)*, troubleshoot them first, then recheck for DTC P2195 (P2197)*.

1. Inspect the condition of the A/F sensor (Sensor 1).

   Is it loose in the exhaust pipe?

   YES—Go to step 2.

   NO—Go to step 4.

2. Turn the ignition switch OFF.

3. Reinstall the A/F sensor (Sensor 1) (see page 11-165).

4. Turn the ignition switch ON (II).

5. Reset the ECM/PCM with the HDS.

6. Do the ECM/PCM idle learn procedure (see page 11-239).

7. Check for Temporary DTCs or DTCs with the HDS.

   Are any Temporary DTCs or DTCs indicated?

   YES—If DTC P2195 and/or P2197* is indicated, check for poor connections or loose terminals at the A/F sensor (Sensor 1) and the ECM/PCM, then go to step 8. If any other Temporary DTCs or DTCs are indicated, go to the indicated DTC's troubleshooting.

   NO—Intermittent failure, system is OK at this time. Check poor connections or loose terminals at the A/F sensor (Sensor 1) and the ECM/PCM.■

8. Monitor the OBD STATUS for DTC P2195 and/or P2197* in the DTCs MENU with the HDS.

   Does the screen indicate PASSED?

   YES—Troubleshooting is complete.■

   NO—If the screen indicates FAILED, check for poor connections or loose terminals at the A/F sensor (Sensor 1) and the ECM/PCM, then then go to step 2. If the screen indicates NOT COMPLETED, go to step 5 and recheck.

Protected by AR

DTC Troubleshooting (cont'd)

DTC P2237: Rear A/F Sensor (Bank 1, Sensor 1) IP Line High Voltage

DTC P2240: Front A/F Sensor (Bank 2, Sensor 1) IP Line High Voltage

NOTE:
- If DTC P2237 and/or P2240* is stored at the same time as DTC P0134 and/or P0154*, troubleshoot DTC P2237 and/or P2240* first, then recheck for P0134 and/or P0154*.
- Information marked with an asterisk (*) applies to the front bank (Bank 2).

1. Turn the ignition switch ON (II).
2. Clear the DTC with the HDS.
3. Start the engine. Hold the engine speed at 3,000 rpm with no load (in Park or neutral) until the radiator fan comes on, then let it idle for 2 minutes.
4. Check for Temporary DTCs or DTCs with the HDS.

   Is DTC P2237 and/or P2240 indicated?*

   YES—Go to step 5.

   NO—Intermittent failure, system is OK at this time. Check for poor connections or loose terminals at the A/F sensor (Sensor 1) and the ECM/PCM. ■
5. Turn the ignition switch OFF.
6. Jump the SCS line with the HDS.
7. Disconnect the A/F sensor (Sensor 1) 8P connector.
8. Disconnect ECM/PCM connector B (24P).
9. Connect A/F sensor (Sensor 1) 8P connector terminal No. 7 to body ground with a jumper wire.

A/F SENSOR (SENSOR 1) 8P CONNECTOR

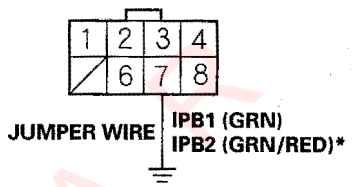

Wire side of female terminals

10. Check for continuity between ECM/PCM connector terminal B14 (B22)* and body ground.

ECM/PCM CONNECTOR B (24P)

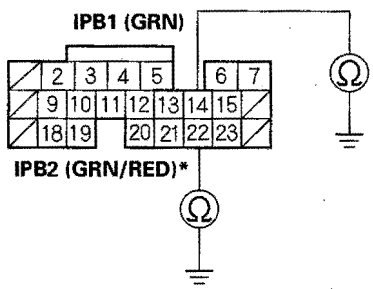

Wire side of female terminals

Is there continuity?

YES—Go to step 11.

NO—Repair open in the wire between the ECM/PCM (B14 (B22)*) and the A/F sensor (Sensor 1), then go to step 15.

Protected by AK

11. Remove the jumper wire from the A/F sensor (Sensor 1) 8P connector, then reconnect ECM/PCM connector B (24P).

12. Start the engine. Hold the engine speed at 3,000 rpm with no load (in Park or neutral) until the radiator fan comes on, then let it idle for 2 minutes.

13. Measure voltage between ECM/PCM connector terminals B14 (B22)* and D10.

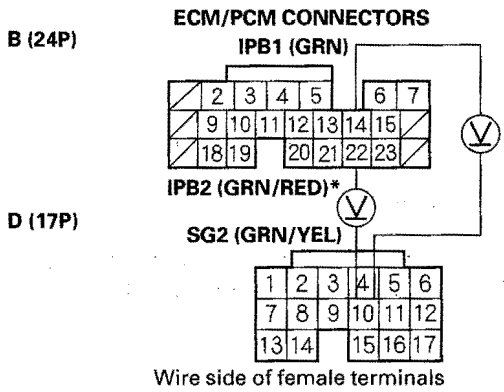

Is there about 0.2 V or less?

YES – Go to step 21.

NO – Go to step 14.

14. Replace the A/F sensor (Sensor 1) (see page 11-165).

15. Reconnect ECM/PCM connector B (24P), and the A/F sensor (Sensor 1) 8P connector.

16. Turn the ignition switch ON (II).

17. Reset the ECM/PCM with the HDS.

18. Do the ECM/PCM idle learn procedure (see page 11-239).

19. Check for Temporary DTCs or DTCs with the HDS.

Are any Temporary DTCs or DTCs indicated?

YES – If DTC P2237 and/or P2240* is indicated, check for poor connections or loose terminals at the A/F sensor (Sensor 1) and the ECM/PCM, then go to step 1. If any other Temporary DTCs or DTCs are indicated, go to the indicated DTC's troubleshooting.

NO – Go to step 20.

20. Monitor the OBD STATUS for DTC P2237 and/or P2240* in the DTCs MENU with the HDS.

Does the screen indicate PASSED?

YES – Troubleshooting is complete. ■

NO – If the screen indicates FAILED, check for poor connections or loose terminals at the A/F sensor (Sensor 1) and the ECM/PCM, then go to step 1. If the screen indicates NOT COMPLETED, go to step 18 and recheck.

21. Update the ECM/PCM if it does not have the latest software, or substitute a known-good ECM/PCM (see page 11-6).

22. Check for Temporary DTCs or DTCs with the HDS.

Are any Temporary DTCs or DTCs indicated?

YES – If DTC P2237 and/or P2240* is indicated, check for poor connections or loose terminals at the A/F sensor (Sensor 1) and the ECM/PCM, then go to step 1. If any other Temporary DTCs or DTCs are indicated, go to the indicated DTC's troubleshooting.

NO – If the ECM/PCM was updated, troubleshooting is completed. If the ECM/PCM was substituted, replace the original ECM/PCM (see page 11-171). ■

Protected by A R

DTC Troubleshooting (cont'd)

DTC P2238: Rear A/F Sensor (Bank 1, Sensor 1) IP Line Low Voltage

DTC P2241: Front A/F Sensor (Bank 2, Sensor 1) IP Line Low Voltage

NOTE: Information marked with an asterisk (*) applies to the front bank (Bank 2).

1. Turn the ignition switch ON (II).
2. Clear the DTC with the HDS.
3. Start the engine. Hold the engine speed at 3,000 rpm with no load (in Park or neutral) until the radiator fan comes on, then let it idle for 2 minutes.
4. Check for Temporary DTCs or DTCs with the HDS.

   Is DTC P2238 and/or P2241 Indicated?*

   YES—Go to step 5.

   NO—Intermittent failure, system is OK at this time. Check for poor connections or loose terminals at the A/F sensor (Sensor 1) and at the ECM/PCM. ■
5. Turn the ignition switch OFF.
6. Jump the SCS line with the HDS.
7. Disconnect the A/F sensor (Sensor 1) 8P connector.
8. Disconnect ECM/PCM connector B (24P).
9. Check for continuity between ECM/PCM connector terminal B14 (B22)* and body ground.

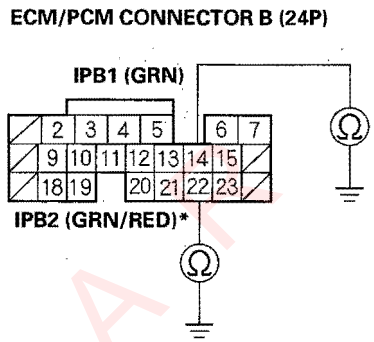

Wire side of female terminals

Is there continuity?

YES—Repair short in the wire between the ECM/PCM (B14 (B22)*) and the A/F sensor (Sensor 1), then go to step 14.

NO—Go to step 10.

10. Reconnect ECM/PCM connector B (24P).
11. Start the engine. Hold the engine speed at 3,000 rpm with no load (in Park or neutral) until the radiator fan comes on, then let it idle for 2 minutes.

Protected by Ar

12. Measure voltage between ECM/PCM connector terminals B14 (B22)* and D10.

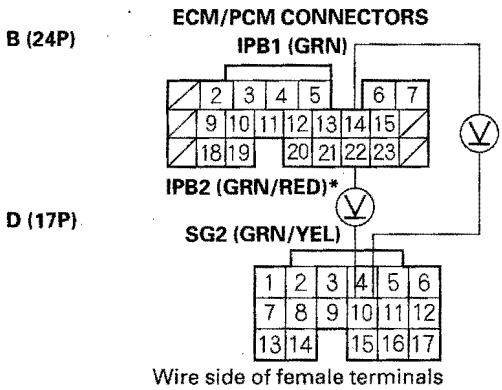

Is there about 0.2 V or less?

YES – Go to step 20.

NO – Go to step 13.

13. Replace the A/F sensor (see page 11-165).

14. Reconnect ECM/PCM connector B (24P), and the A/F sensor (Sensor 1) 8P connector.

15. Turn the ignition switch ON (II).

16. Reset the ECM/PCM with the HDS.

17. Do the ECM/PCM idle learn procedure (see page 11-239).

18. Check for Temporary DTCs or DTCs with the HDS.

Are any Temporary DTCs or DTCs indicated?

YES – If DTC P2238 and/or P2241* is indicated, check for poor connections or loose terminals at the A/F sensor (Sensor 1) and the ECM/PCM, then go to step 1. If any other Temporary DTCs or DTCs are indicated, go to the indicated DTC's troubleshooting.

NO – Go to step 19.

19. Monitor the OBD STATUS for DTC P2238 and/or P2241* in the DTCs MENU with the HDS.

Does the screen indicate PASSED?

YES – Troubleshooting is complete. ■

NO – If the screen indicates FAILED, check for poor connections or loose terminals at the A/F sensor (Sensor 1) and the ECM/PCM, then go to step 1. If the screen indicates NOT COMPLETED, go to step 17 and recheck.

20. Update the ECM/PCM if it does not have the latest software, or substitute a known-good ECM/PCM (see page 11-6).

21. Check for Temporary DTCs or DTCs with the HDS.

Are any Temporary DTCs or DTCs indicated?

YES – If DTC P2238 and/or P2241* is indicated, check for poor connections or loose terminals at the A/F sensor (Sensor 1) and the ECM/PCM, then go to step 1. If any other Temporary DTCs or DTCs are indicated, go to the indicated DTC's troubleshooting.

NO – If the ECM/PCM was updated, troubleshooting is complete. If the ECM/PCM was substituted, replace the original ECM/PCM (see page 11-171). ■

Protected by AR

DTC Troubleshooting (cont'd)

DTC P2243: Rear A/F Sensor (Bank 1, Sensor 1) VCENT Line High Voltage

DTC P2247: Front A/F Sensor (Bank 2, Sensor 1) VCENT Line High Voltage

NOTE: Information marked with an asterisk (*) applies to the front bank (Bank 2).

1. Turn the ignition switch ON (II).
2. Clear the DTC with the HDS.
3. Start the engine. Hold the engine speed at 3,000 rpm with no load (in Park or neutral) until the radiator fan comes on, then let it idle for 2 minutes.
4. Check for Temporary DTCs or DTCs with the HDS.

   Is DTC P2243 and/or P2247 indicated?*

   YES—Go to step 5.

   NO—Intermittent failure, system is OK at this time. Check for poor connections or loose terminals at the A/F sensor (Sensor 1) and the ECM/PCM. ■
5. Turn the ignition switch OFF.
6. Jump the SCS line with the HDS.
7. Disconnect the A/F sensor (Sensor 1) 8P connector.
8. Disconnect ECM/PCM connector B (24P).
9. Connect A/F sensor (Sensor 1) 8P connector terminal No. 8 to body ground with a jumper wire.

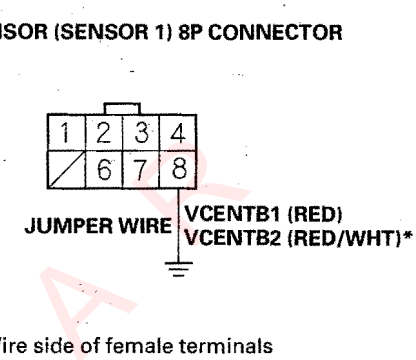

10. Check for continuity between ECM/PCM connector terminal B13 (B21)* and body ground.

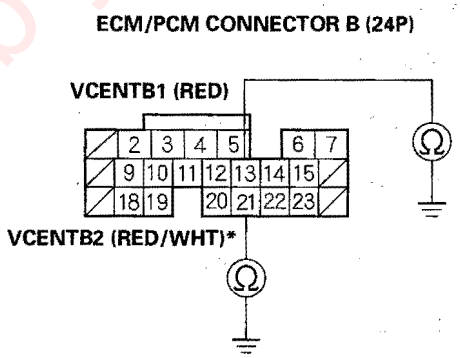

Is there continuity?

YES—Go to step 11.

NO—Repair open in the wire between the ECM/PCM (B13 (B21)*) and the A/F sensor (Sensor 1), then go to step 15.

Protected by AR

11. Remove the jumper wire from the A/F sensor (Sensor 1) 8P connector, then reconnect ECM/PCM connector B (24P).

12. Start the engine. Hold the engine speed at 3,000 rpm with no load (in Park or neutral) until the radiator fan comes on, then let it idle for 2 minutes.

13. Measure voltage between ECM/PCM connector terminals B13 (B21)* and D10.

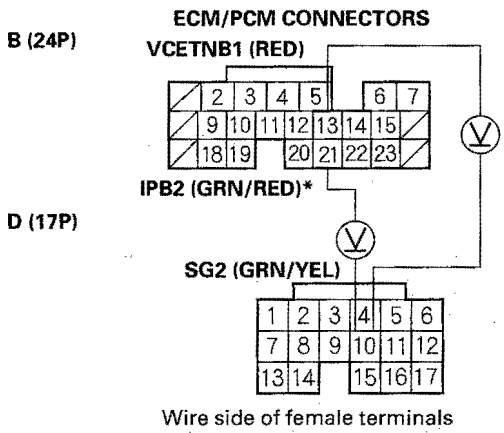

Wire side of female terminals

Is there about 0.2 V or less?

YES—Go to step 21.

NO—Go to step 14.

14. Replace the A/F sensor (Sensor 1) (see page 11-165).

15. Reconnect ECM/PCM connector B (24P), and the A/F sensor (Sensor 1) 8P connector.

16. Turn the ignition switch ON (II).

17. Reset the ECM/PCM with the HDS.

18. Do the ECM/PCM idle learn procedure (see page 11-239).

19. Check for Temporary DTCs or DTCs with the HDS.

Are any Temporary DTCs or DTCs indicated?

YES—If DTC P2243 and/or P2247* is indicated, check for poor connections or loose terminals at the A/F sensor (Sensor 1) and the ECM/PCM, then go to step 1. If any other Temporary DTCs or DTCs are indicated, go to the indicated DTC's troubleshooting.

NO—Go to step 20.

20. Monitor the OBD STATUS for DTC P2243 and/or P2247* in the DTCs MENU with the HDS.

Does the screen indicate PASSED?

YES—Troubleshooting is complete.■

NO—If the screen indicates FAILED, check for poor connections or loose terminals at the A/F sensor (Sensor 1) and the ECM/PCM, then go to step 1. If the screen indicates NOT COMPLETED, go to step 18 and recheck.

21. Update the ECM/PCM if it does not have the latest software, or substitute a known-good ECM/PCM (see page 11-6).

22. Check for Temporary DTCs or DTCs with the HDS.

Are any Temporary DTCs or DTCs indicated?

YES—If DTC P2243 and/or P2247* is indicated, check for poor connections or loose terminals at the A/F sensor (Sensor 1) and the ECM/PCM, then go to step 1. If any other Temporary DTCs or DTCs are indicated, go to the indicated DTC's troubleshooting.

NO—If the ECM/PCM was updated, troubleshooting is complete. If the ECM/PCM was substituted, replace the original ECM/PCM (see page 11-171).■

Protected by A R

DTC Troubleshooting (cont'd)

DTC P2245: Rear A/F Sensor (Bank 1, Sensor 1) VCENT Line Low Voltage

DTC P2249: Front A/F Sensor (Bank 2, Sensor 1) VCENT Line Low Voltage

NOTE: Information marked with an asterisk (*) applies to the front bank (Bank 2).

1. Turn the ignition switch ON (II).
2. Clear the DTC with the HDS.
3. Start the engine. Hold the engine speed at 3,000 rpm with no load (in Park or neutral) until the radiator fan comes on, then let it idle for 2 minutes.
4. Check for Temporary DTCs or DTCs with the HDS.

   Is DTC P2245 and/or P2249 indicated?*

   YES—Go to step 5.

   NO—Intermittent failure, system is OK at this time. Check for poor connections or loose terminals at the A/F sensor (Sensor 1) and at the ECM/PCM.■
5. Turn the ignition switch OFF.
6. Jump the SCS line with the HDS.
7. Disconnect the A/F sensor (Sensor 1) 8P connector.
8. Disconnect ECM/PCM connector B (24P).
9. Check for continuity between ECM/PCM connector terminal B13 (B21)* and body ground.

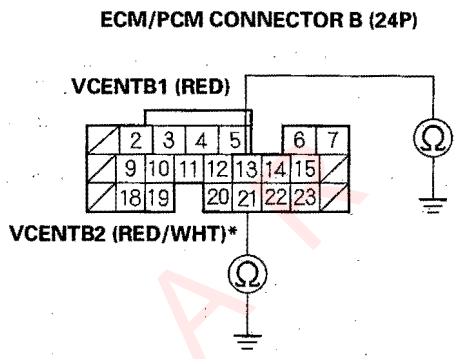

   Is there continuity?

   YES—Repair short in the wire between the ECM/PCM (B13 (B21)*) and the A/F sensor (Sensor 1), then go to step 14.

   NO—Go to step 10.
10. Reconnect ECM/PCM connector B (24P).
11. Start the engine. Hold the engine speed at 3,000 rpm with no load (in Park or neutral) until the radiator fan comes on, then let it idle.

Protected by AR

12. Measure voltage between ECM/PCM connector terminals B13 (B21)* and D10.

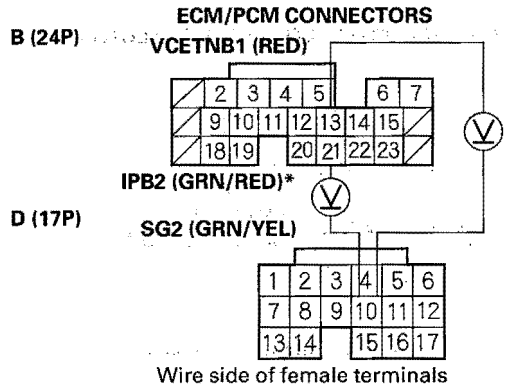

Wire side of female terminals

Is there about 0.2 V or less?

YES – Go to step 20.

NO – Go to step 13.

13. Replace the A/F sensor (Sensor 1) (see page 11-165).

14. Reconnect ECM/PCM connector B (24P), and the A/F sensor (Sensor 1) 8P connector.

15. Turn the ignition switch ON (II).

16. Reset the ECM/PCM with the HDS.

17. Do the ECM/PCM idle learn procedure (see page 11-239).

18. Check for Temporary DTCs or DTCs with the HDS.

Are any Temporary DTCs or DTCs indicated?

YES – If DTC P2245 and/or P2249* is indicated, check for poor connections or loose terminals at the A/F sensor (Sensor 1) and the ECM/PCM, then go to step 1. If any other Temporary DTCs or DTCs are indicated, go to the indicated DTC's troubleshooting.

NO – Go to step 19.

19. Monitor the OBD STATUS for DTC P2245 and/or P2249* in the DTCs MENU with the HDS.

Does the screen indicate PASSED?

YES – Troubleshooting is complete. ■

NO – If the screen indicates FAILED, check for poor connections or loose terminals at the A/F sensor (Sensor 1) and the ECM/PCM, then go to step 1. If the screen indicates NOT COMPLETED, go to step 17 and recheck.

20. Update the ECM/PCM if it does not have the latest software, or substitute a known-good ECM/PCM (see page 11-6).

21. Check for Temporary DTCs or DTCs with the HDS.

Are any Temporary DTCs or DTCs indicated?

YES – If DTC P2245 and/or P2249* is indicated, check for poor connections or loose terminals at the A/F sensor (Sensor 1) and the ECM/PCM, then go to step 1. If any other Temporary DTCs or DTCs are indicated, go to the indicated DTC's troubleshooting.

NO – If the ECM/PCM was updated, troubleshooting is complete. If the ECM/PCM was substituted, replace the original ECM/PCM (see page 11-171). ■

Protected by A R

DTC Troubleshooting (cont'd)

DTC P2251: Rear A/F Sensor (Bank 1, Sensor 1) VS Line High Voltage

DTC P2254: Front A/F Sensor (Bank 2, Sensor 1) VS Line High Voltage

NOTE:
- If DTC P2251 and/or P2254* is stored at the same time as DTC P0134 and/or P0154*, troubleshoot DTC P2251 and/or P2254* first, then recheck for P0134 and/or P0154*.
- Information marked with an asterisk (*) applies to the front bank (Bank 2).

1. Turn the ignition switch ON.
2. Clear the DTC with the HDS.
3. Start the engine. Hold the engine speed at 3,000 rpm with no load (in Park or neutral) until the radiator fan comes on, then let it idle for 2 minutes.
4. Check for Temporary DTCs or DTCs with the HDS.

   Is DTC P2251 and/or P2254 indicated?*

   YES—Go to step 5.

   NO—Intermittent failure, system is OK at this time. Check for poor connections or loose terminals at the A/F sensor (Sensor 1) and the ECM/PCM. ■
5. Turn the ignition switch OFF.
6. Jump the SCS line with the HDS.
7. Disconnect the A/F sensor (Sensor 1) 8P connector.
8. Disconnect ECM/PCM connector B (24P).
9. Connect A/F sensor (Sensor 1) 8P connector terminal No. 6 to body ground with a jumper wire.

A/F SENSOR (SENSOR 1) 8P CONNECTOR

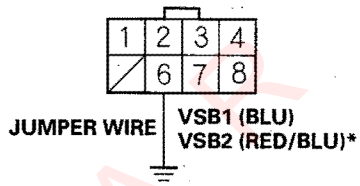

Wire side of female terminals

10. Check for continuity between ECM/PCM connector terminal B12 (B20)* and body ground.

ECM/PCM CONNECTOR B (24P)

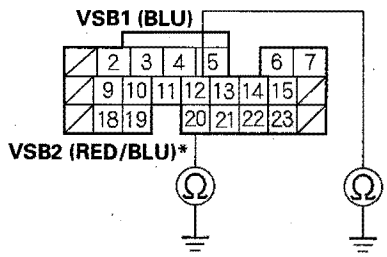

Wire side of female terminals

Is there continuity?

YES—Go to step 11.

NO—Repair open in the wire between the ECM/PCM (B12 (B20)*) and the A/F sensor (Sensor 1), then go to step 15.

Protected by AK

11. Remove the jumper wire from the A/F sensor (Sensor 1) 8P connector, then reconnect ECM/PCM connector B (24P).

12. Start the engine. Hold the engine speed at 3,000 rpm with no load (in Park or neutral) until the radiator fan comes on, then let it idle for 2 minutes.

13. Measure voltage between ECM/PCM connector terminals B12 (B20)* and D10.

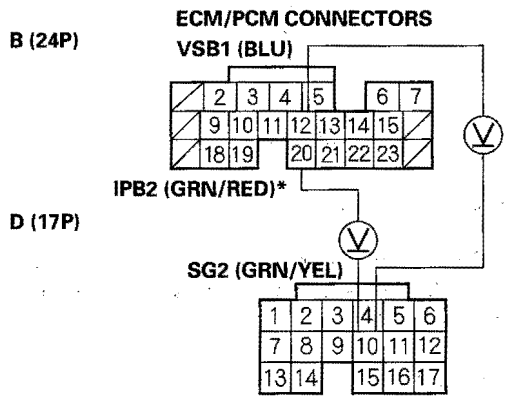

Wire side of female terminals

Is there about 0.2 V or less?

YES—Go to step 21.

NO—Go to step 14.

14. Replace the A/F sensor (see page 11-165).

15. Reconnect ECM/PCM connector B (24P), and the A/F sensor (Sensor 1) 8P connector.

16. Turn the ignition switch ON .

17. Reset the ECM/PCM with the HDS.

18. Do the ECM/PCM idle learn procedure (see page 11-239).

19. Check for Temporary DTCs or DTCs with the HDS.

Are any Temporary DTCs or DTCs indicated?

YES—If DTC P2251 and/or P2254* is indicated, check for poor connections or loose terminals at the A/F sensor (Sensor 1) and the ECM/PCM, then go to step 1. If any other Temporary DTCs or DTCs are indicated, go to the indicated DTC's troubleshooting.

NO—Go to step 20.

20. Monitor the OBD STATUS for DTC P2251 and/or P2254* in the DTCs MENU with the HDS.

Does the screen indicate PASSED?

YES—Troubleshooting is complete.■

NO—If the screen indicates FAILED, check for poor connections or loose terminals at the A/F sensor (Sensor 1) and the ECM/PCM, then go to step 1. If the screen indicates NOT COMPLETED, go to step 18 and recheck.

21. Update the ECM/PCM if it does not have the latest software, or substitute a known-good ECM/PCM (see page 11-6).

22. Check for Temporary DTCs or DTCs with the HDS.

Are any Temporary DTCs or DTCs indicated?

YES—If DTC P2251 and/or P2254* is indicated, check for poor connections or loose terminals at the A/F sensor (Sensor 1) and the ECM/PCM, then go to step 1. If any other Temporary DTCs or DTCs are indicated, go to the indicated DTC's troubleshooting.

NO—If the ECM/PCM was updated, troubleshooting is completed. If the ECM/PCM was substituted, replace the original ECM/PCM (see page 11-171).■

Protected by A R

DTC Troubleshooting (cont'd)

DTC P2252: Rear A/F Sensor (Bank 1, .Sensor 1) VS Line Low Voltage

DTC P2255: Front A/F Sensor (Bank 2, Sensor 1) VS Line Low Voltage

NOTE: Information marked with an asterisk (*) applies to the front bank (Bank 2).

1. Turn the ignition switch ON (II).
2. Clear the DTC with the HDS.
3. Start the engine. Hold the engine speed at 3,000 rpm with no load (in Park or neutral) until the radiator fan comes on, then let it idle for 2 minutes.
4. Check for Temporary DTCs or DTCs with the HDS.

   Is DTC P2252 and/or P2255 indicated?*

   YES—Go to step 5.

   NO—Intermittent failure, system is OK at this time. Check for poor connections or loose terminals at the A/F sensor (Sensor 1) and the ECM/PCM. ■
5. Turn the ignition switch OFF.
6. Jump the SCS line with the HDS.
7. Disconnect the A/F sensor (Sensor 1) 8P connector.
8. Disconnect ECM/PCM connector B (24P).
9. Check for continuity between ECM/PCM connector terminal B12 (B20)* and body ground.

   ECM/PCM CONNECTOR B (24P)

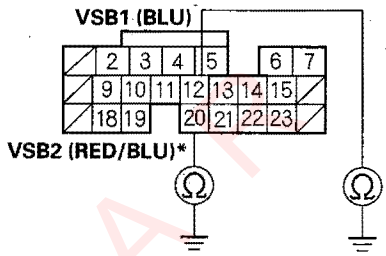

   Wire side of female terminals

   Is there continuity?

   YES—Repair short in the wire between the ECM/PCM (B12 (B20)*) and the A/F sensor (Sensor 1), then go to step 14.

   NO—Go to step 10.
10. Reconnect ECM/PCM connector B (24P).
11. Start the engine. Hold the engine speed at 3,000 rpm with no load (in Park or neutral) until the radiator fan comes on, then let it idle for 2 minutes.

Protected by AP

12. Measure voltage between ECM/PCM connector terminals B12 (B20)* and D10.

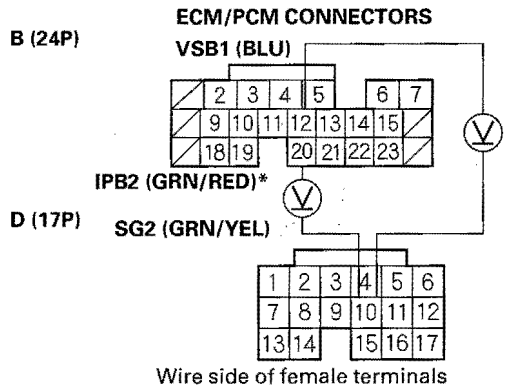

Wire side of female terminals

Is there about 0.2 V or less?

YES—Go to step 20.

NO—Go to step 13.

13. Replace the A/F sensor (Sensor 1) (see page 11-165).

14. Reconnect ECM/PCM connector B (24P), and the A/F sensor (Sensor 1) 8P connector.

15. Turn the ignition switch ON (II).

16. Reset the ECM/PCM with the HDS.

17. Do the ECM/PCM idle learn procedure (see page 11-239).

18. Check for Temporary DTCs or DTCs with the HDS.

Are any Temporary DTCs or DTCs indicated?

YES—If DTC P2252 and/or P2255* is indicated, check for poor connections or loose terminals at the A/F sensor (Sensor 1) and the ECM/PCM, then go to step 1. If any other Temporary DTCs or DTCs are indicated, go to the indicated DTC's troubleshooting.

NO—Go to step 19.

19. Monitor the OBD STATUS for DTC P2252 and/or P2255* in the DTCs MENU with the HDS.

Does the screen indicate PASSED?

YES—Troubleshooting is complete. ■

NO—If the screen indicates FAILED, check for poor connections or loose terminals at the A/F sensor (Sensor 1) and the ECM/PCM, then go to step 1. If the screen indicates NOT COMPLETED, go to step 17 and recheck.

20. Update the ECM/PCM if it does not have the latest software, or substitute a known-good ECM/PCM (see page 11-6).

21. Check for Temporary DTCs or DTCs with the HDS.

Are any Temporary DTCs or DTCs indicated?

YES—If DTC P2252 and/or P2255* is indicated, check for poor connections or loose terminals at the A/F sensor (Sensor 1) and the ECM/PCM, then go to step 1. If any other Temporary DTCs or DTCs are indicated, go to the indicated DTC's troubleshooting.

NO—If the ECM/PCM was updated, troubleshooting is complete. If the ECM/PCM was substituted, replace the original ECM/PCM (see page 11-171). ■

Protected by A

DTC Troubleshooting (cont'd)

DTC P2627: Rear A/F Sensor (Bank 1, Sensor 1) LABEL Circuit Low Voltage

DTC P2630: Front A/F Sensor (Bank 2, Sensor 1) LABEL Circuit Low Voltage

NOTE: Information marked with an asterisk (*) applies to the front bank (Bank 2).

1. Turn the ignition switch ON (II).
2. Clear the DTC with the HDS.
3. Start the engine. Hold the engine speed at 3,000 rpm with no load (in Park or neutral) until the radiator fan comes on, then let it idle for 2 minutes.
4. Check for Temporary DTCs or DTCs with the HDS.

   Is DTC P2627 and/or P2630 indicated?*

   YES—Go to step 5.

   NO—Intermittent failure, system is OK at this time. Check for poor connections or loose terminals at the A/F sensor (Sensor 1) and the ECM/PCM. ■
5. Turn the ignition switch OFF.
6. Jump the SCS line with the HDS.
7. Disconnect the ECM/PCM connector B (24P).
8. Check for continuity between ECM/PCM connector terminal B10 (B19)* and body ground.

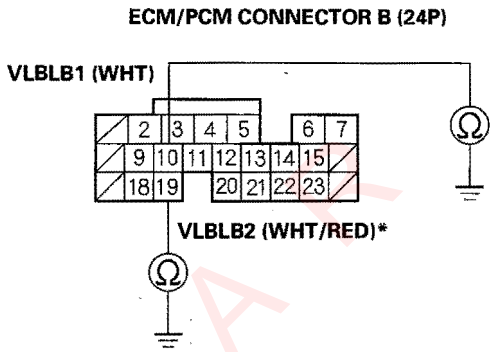

Wire side of female terminals

Is there continuity?

YES—Go to step 9.

NO—Go to step 18.

9. Disconnect the A/F sensor (Sensor 1) 8P connector.
10. Check for continuity between ECM/PCM connector terminal B10 (B19)* and body ground.

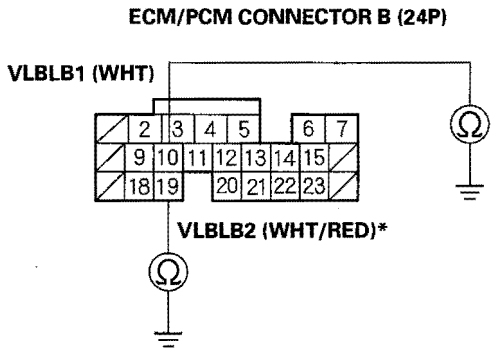

Wire side of female terminals

Is there continuity?

YES—Repair short in the wire between the ECM/PCM (B10 (B19)*) and the A/F sensor (Sensor 1), then go to step 12.

NO—Go to step 11.

Protected by A

11. Replace the A/F sensor (Sensor 1) (see page 11-165).

12. Reconnect all connectors.

13. Turn the ignition switch ON (II).

14. Reset the ECM/PCM with the HDS.

15. Do the ECM/PCM idle learn procedure (see page 11-239).

16. Check for Temporary DTCs or DTCs with the HDS.

    Are any Temporary DTCs or DTCs indicated?

    YES—If DTC P2627 and/or P2630' is indicated, check for poor connections or loose terminals at the A/F sensor (Sensor 1) and the ECM/PCM, then go to step 1. If any other Temporary DTCs or DTCs are indicated, go to the indicated DTC's troubleshooting.

    NO—Go to step 17.

17. Monitor the OBD STATUS for DTC P2627 and/or P2630' in the DTCs MENU with the HDS.

    Does the screen indicate PASSED?

    YES—Troubleshooting is complete.■

    NO—If the screen indicates FAILED, check for poor connections or loose terminals at the A/F sensor (Sensor 1) and the ECM/PCM, then go to step 1. If the screen indicates NOT COMPLETED, go to step 15 and recheck.

18. Update the ECM/PCM if it does not have the latest software, or substitute a known-good ECM/PCM (see page 11-6).

19. Check for Temporary DTCs or DTCs with the HDS.

    Are any Temporary DTCs or DTCs indicated?

    YES—If DTC P2627 and/or P2630' is indicated, check for poor connections or loose terminals at the A/F sensor (Sensor 1) and the ECM/PCM, then go to step 1. If any other Temporary DTCs or DTCs are indicated, go to the indicated DTC's troubleshooting.

    NO—If the ECM/PCM was updated, troubleshooting is complete. If the ECM/PCM was substituted, replace the original ECM/PCM (see page 11-171).■

Protected by AP

DTC Troubleshooting (cont'd)

DTC P2628: Rear A/F Sensor (Bank 1, Sensor 1) LABEL Circuit High Voltage

DTC P2631: Front A/F Sensor (Bank 2, Sensor 1) LABEL Circuit High Voltage

NOTE: Information marked with an asterisk (*) applies to the front bank (Bank 2).

1. Turn the ignition switch ON (II).
2. Clear the DTC with the HDS.
3. Start the engine. Hold the engine speed at 3,000 rpm with no load (in Park or neutral) until the radiator fan comes on, then let it idle for 2 minutes.
4. Check for Temporary DTCs or DTCs with the HDS.

   Is DTC P2628 and/or P2631 indicated?*

   YES—Go to step 5.

   NO—Intermittent failure, system is OK at this time. Check for poor connections or loose terminals at the A/F sensor (Sensor 1) and at the ECM/PCM. ■
5. Turn the ignition switch OFF.
6. Jump the SCS line with the HDS.
7. Disconnect the A/F sensor (Sensor 1) 8P connector.
8. Disconnect ECM/PCM connector B (24P).
9. Connect A/F sensor (Sensor 1) 8P connector terminal No. 4 to body ground with a jumper wire.

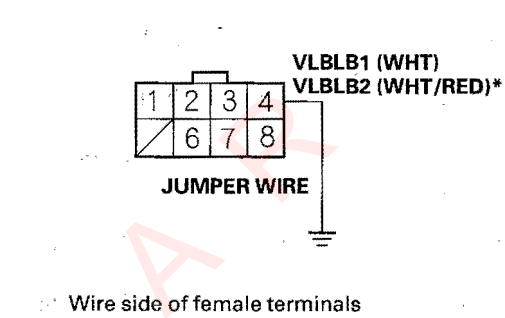

10. Check for continuity between ECM/PCM connector terminal B10 (B19)* and body ground.

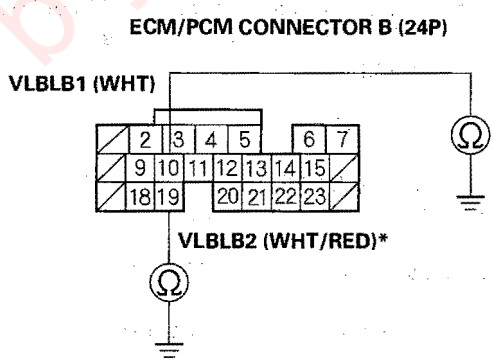

Is there continuity?

YES—Go to step 11.

NO—Repair open in the wire between the ECM/PCM (B10 (B19)*) and the A/F sensor (Sensor 1), then go to step 15.

Protected by AR

11. Remove the jumper wire from the A/F sensor (Sensor 1) 8P connector, then reconnect ECM/PCM connector B (24P).

12. Start the engine. Hold the engine speed at 3,000 rpm with no load (in Park or neutral) until the radiator fan comes on, then let it idle.

13. Measure voltage between ECM/PCM connector terminals B10 (B19)* and D10.

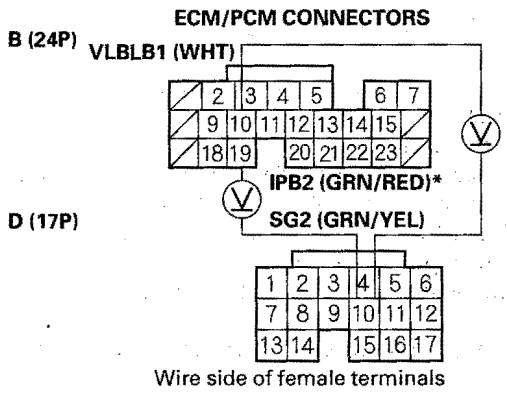

Wire side of female terminals

Is there about 5 V?

YES—Go to step 14.

NO—Go to step 21.

14. Replace the A/F sensor (Sensor 1) (see page 11-165).

15. Reconnect ECM/PCM connector B (24P), and the A/F sensor (Sensor 1) 8P connector.

16. Turn the ignition switch ON (II).

17. Reset the ECM/PCM with the HDS.

18. Do the ECM/PCM idle learn procedure (see page 11-239).

19. Check for Temporary DTCs or DTCs with the HDS.

Are any Temporary DTCs or DTCs indicated?

YES—If DTC P2628 and/or P2631* is indicated, check for poor connections or loose terminals at the A/F sensor (Sensor 1) and the ECM/PCM, then go to step 1. If any other Temporary DTCs or DTCs are indicated, go to the indicated DTC's troubleshooting.

NO—Go to step 20.

20. Monitor the OBD STATUS for DTC P2628 and/or P2631* in the DTCs MENU with the HDS.

Does the screen indicate PASSED?

YES—Troubleshooting is complete.■

NO—If the screen indiactes FAILED, check for poor connections or loose terminals at the A/F sensor (Sensor 1) and the ECM/PCM, then go to step 1. If the screen indicates NOT COMPLETED, go to step 18 and recheck.

21. Update the ECM/PCM if it does not have the latest software, or substitute a known-good ECM/PCM (see page 11-6).

22. Check for Temporary DTCs or DTCs with the HDS.

Are any Temporary DTCs or DTCs indicated?

YES—If DTC P2628 and/or P2631* is indicated, check for poor connections or loose terminals at the A/F sensor (Sensor 1) and the ECM/PCM, then go to step 1. If any other Temporary DTCs or DTCs are indicated, go to the indicated DTC's troubleshooting.

NO—If the ECM/PCM was updated, troubleshooting is complete. If the ECM/PCM was substituted, replace the original ECM/PCM (see page 11-171).■

Protected by A R

DTC Troubleshooting (cont'd)

DTC P2A00: Rear A/F Sensor (Bank 1, Sensor 1) Range/Performance Problem

DTC P2A03: Front A/F Sensor (Bank 2, Sensor 1) Range/Performance Problem

NOTE: Information marked with an asterisk (*) applies to the front bank (Bank 2).

1. Turn the ignition switch ON (II).
2. Clear the DTC with the HDS.
3. Start the engine. Hold the engine speed at 3,000 rpm with no load (in Park or neutral) until the radiator fan comes on, then let it idle.
4. Test-drive under these conditions:
   - Engine coolant temperature more than 158°F (70°C)
   - A/T in D position (M/T in 3rd gear)
   - Vehicle speed at 30 mph (48 km/h) or more, and engine speed at 2,600 rpm or less
   - Drive with the throttle fully opened for 5 seconds at an engine speed of 1,600 rpm, then slow down with the throttle completely closed.
5. Monitor the OBD STATUS for DTC P2A00 and/or P2A03* in the DTCs MENU with the HDS.

   Does the screen indicate FAILED?

   YES – Go to step 6.

   NO – If the screen indicates PASSED, intermittent failure, system is OK at this time. If it is EXECUTING, keep driving until a result comes on. If the screen indicates OUT OF CONDITION, go to step 3 and recheck.
6. Turn the ignition switch OFF.
7. Replace the A/F sensor (Sensor 1) (see page 11-165).
8. Turn the ignition switch ON (II).
9. Reset the ECM/PCM with the HDS.
10. Do the ECM/PCM idle learn procedure (see page 11-239).
11. Test-drive under these conditions:
    - Engine coolant temperature more than 158°F (70°C)
    - A/T in D position (M/T in 3rd gear)
    - Vehicle speed at 30 mph (48 km/h) or more, and engine speed at 2,600 rpm or less
    - Drive with the throttle fully opened for 5 seconds at an engine speed of 1,600 rpm, then slow down with the throttle completely closed.
12. Check for Temporary DTCs or DTCs with the HDS.

    Are any Temporary DTCs or DTCs indicated?

    YES – If DTC P2A00 and/or P2A03* is indicated, check for poor connections or loose terminals at the A/F sensor (Sensor 1) and the ECM/PCM, then go to step 1. If any other Temporary DTCs or DTCs are indicated, go to the indicated DTC's troubleshooting.

    NO – Go to step 13.

Protected by AP

13. Monitor the OBD STATUS for DTC P2A00 and/or P2A03* in the DTCs MENU with the HDS.

Does the screen indicate PASSED?

YES—Troubleshooting is complete. ■

NO—If the screen indicates FAILED, check for poor connections or loose terminals at the A/F sensor (Sensor 1) and the ECM/PCM, then go to step 1. If the screen indicates EXECUTING, keep driving until a result comes on. If the screen indicates OUT OF CONDITION, go to step 11 and recheck.

Protected by AR

DTC Troubleshooting (cont'd)

DTC P0137: Rear Secondary HO2S (Bank 1, Sensor 2) Circuit Low Voltage

DTC P0157: Front Secondary HO2S (Bank 2, Sensor 2) Circuit Low Voltage

NOTE: Information marked with an asterisk (*) applies to the front bank (Bank 2).

1. Turn the ignition switch ON (II).
2. Clear the DTC with the HDS.
3. Start the engine. Hold the engine speed at 3,000 rpm with no load (in Park or neutral) until the radiator fan comes on, then let it idle.
4. Check the HO2S S2 in the DATA LIST with the HDS.

   Does the voltage stay at 0.29 V or less?

   YES—Go to step 5.

   NO—Go to step 9.
5. Turn the ignition switch OFF.
6. Disconnect the secondary HO2S (Sensor 2) 4P connector.
7. Turn the ignition switch ON (II).
8. Check the HO2S S2 in the DATA LIST with the HDS.

   Does the voltage stay at 0.29 V or less?

   YES—Go to step 11.

   NO—Go to step 15.
9. Test-drive under these conditions:
   - Engine coolant temperature more than 158°F (70°C)
   - A/T in D position (M/T in 4th gear)
   - Engine speed at 2,000—3,000 rpm
   - Drive about 10 minutes, then decelerate (with the throttle fully closed) for 5 seconds
10. Monitor the OBD STATUS for DTC P0137 and/or P0157* in the DTCs MENU with the HDS.

    Does the screen indicate FAILED?

    YES—Go to step 16.

    NO—If the screen indicates PASSED, intermittent failure, system is OK at this time. If the screen indicates EXECUTING, keep driving until a result comes on. If the screen indicates OUT OF CONDITION, go to step 9 and recheck.
11. Turn the ignition switch OFF.
12. Jump the SCS line with the HDS.
13. Disconnect ECM/PCM connector B (24P).
14. Check for continuity between Secondary HO2S (Sensor 2) 4P connector terminal No. 1 and body ground.

SECONDARY HO2S (SENSOR 2) 4P CONNECTOR

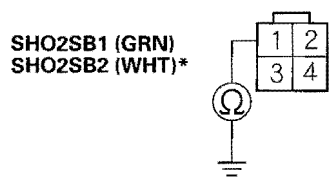

Wire side of female terminals

Is there continuity?

YES—Repair short in the wire between the ECM/PCM (B9 (B18)*) and the secondary HO2S (Sensor 2), then go to step 17.

NO—Go to step 24.

Protected by AR

15. Turn the ignition switch OFF.

16. Replace the secondary HO2S (Sensor 2) (see page 11-166).

17. Turn the ignition switch ON (II).

18. Reset the ECM/PCM with the HDS.

19. Do the ECM/PCM idle learn procedure (see page 11-239).

20. Start the engine. Hold the engine speed at 3,000 rpm with no load (in Park or neutral) until the radiator fan comes on, then let it idle.

21. Test-drive under these conditions:

    - Engine coolant temperature more than 158°F (70°C)
    - A/T in D position (M/T in 4th gear)
    - Engine speed at 2,000–3,000 rpm
    - Drive about 10 minutes, then decelerate (with the throttle fully closed) for 5 seconds

22. Check for Temporary DTCs or DTCs with the HDS.

    Are any Temporary DTCs or DTCs indicated?

    YES—If DTC P0137 and/or P0157* is indicated, check for poor connections or loose terminals at the secondary HO2S (Sensor 2) and the ECM/PCM, then go to step 1. If any other Temporary DTCs or DTCs are indicated, go to the indicated DTC's troubleshooting.

    NO—Go to step 23.

23. Monitor the OBD STATUS for DTC P0137 and/or P0157* in the DTCs MENU with the HDS.

    Does the screen indicate PASSED?

    YES—Troubleshooting is complete.■

    NO—If the screen indicates FAILED, check for poor connections or loose terminals at the secondary HO2S (Sensor 2) and the ECM/PCM, then go to step 1. If the screen indicates EXECUTING, keep driving until a result comes on. If the screen indicates OUT OF CONDITION, go to step 20 and recheck.

24. Update the ECM/PCM if it does not have the latest software, or substitute a known-good ECM/PCM (see page 11-6).

25. Start the engine. Hold the engine speed at 3,000 rpm with no load (in Park or neutral) until the radiator fan comes on, then let it idle.

26. Test-drive under these conditions:

    - Engine coolant temperature more than 158°F (70°C)
    - A/T in D position (M/T in 4th gear)
    - Engine speed at 2,000–3,000 rpm
    - Drive about 10 minutes, then decelerate (with the throttle fully closed) for 5 seconds

27. Check for Temporary DTCs or DTCs with the HDS.

    Are any Temporary DTCs or DTCs indicated?

    YES—If DTC P0137 and/or P0157* is indicated, check for poor connections or loose terminals at the secondary HO2S (Sensor 2) and the ECM/PCM, then go step 1. If any other Temporary DTCs or DTCs are indicated, go to the indicated DTC's troubleshooting.

    NO—If the ECM/PCM was updated, troubleshooting is complete. If the ECM/PCM was substituted, replace the original ECM/PCM (see page 11-171).■

Protected by

DTC Troubleshooting (cont'd)

DTC P0138: Rear Secondary HO2S (Bank 1, Sensor 2) Circuit High Voltage

DTC P0158: Front Secondary HO2S (Bank 2, Sensor 2) Circuit High Voltage

NOTE: Information marked with an asterisk (*) applies to the front bank (Bank 2).

1. Turn the ignition switch ON (II).
2. Clear the DTC with the HDS.
3. Start the engine. Hold the engine speed at 3,000 rpm with no load (in Park or neutral) until the radiator fan comes on, then let it idle.
4. Check the HO2S S2 in the DATA LIST with the HDS.

   Does the voltage stay at 0.75 V or higher?

   YES—Go to step 7.

   NO—Go to step 5.
5. Test-drive under these conditions:
   - Engine coolant temperature more than 158°F (70°C)
   - A/T in D position (M/T in 4th gear)
   - Engine speed at 2,000—3,000 rpm
   - Drive about 10 minutes, then decelerate (with the throttle fully closed) for 5 seconds
6. Monitor the OBD STATUS for DTC P0138 and/or P0158* in the DTCs MENU with the HDS.

   Does the screen indicate FAILED?

   YES—Go to step 19.

   NO—If the screen indicates PASSED, intermittent failure, system is OK at this time. If the screen indicates EXECUTING, keep driving until a result comes on. If the screen indicates OUT OF CONDITION, go to step 5 and recheck.
7. Turn the ignition switch OFF.
8. Disconnect the secondary HO2S (Sensor 2) 4P connector.
9. Connect secondary HO2S (Sensor 2) 4P connector terminals No. 1 and No. 2 with a jumper wire.

SECONDARY HO2S (SENSOR 2) 4P CONNECTOR

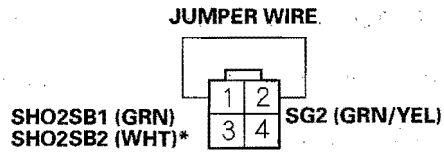

Wire side of female terminals

10. Turn the ignition switch ON (II).
11. Check the HO2S S2 in the DATA LIST with the HDS.

    Does the voltage stay at 0.75 V or higher?

    YES—Go to step 12.

    NO—Go to step 19.
12. Turn the ignition switch OFF.
13. Jump the SCS line with the HDS.
14. Disconnect ECM/PCM connectors B (24P) and D (17P).

Protected by A

15. Check for continuity between ECM/PCM connector terminals D10 and B9 (B18)*.

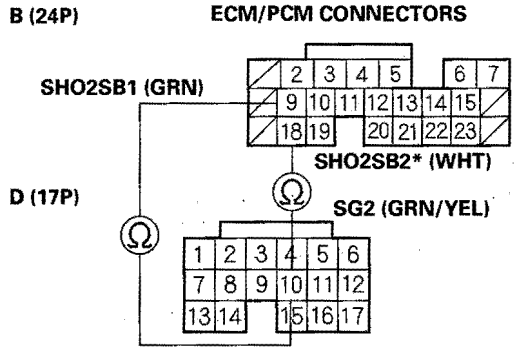

Wire side of female terminals

Is there continuity?

YES — Go to step 28.

NO — Go to step 16.

16. Remove the jumper wire from the secondary HO2S (Sensor 2) 4P connector.

17. Connect secondary HO2S (Sensor 2) 4P connector terminal No. 1 to body ground with a jumper wire.

SECONDARY HO2S (SENSOR 2) 4P CONNECTOR

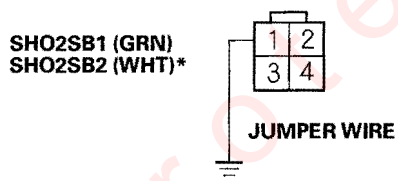

Wire side of female terminals

18. Check for continuity between ECM/PCM connector terminal B9 (B18)* and body ground.

ECM/PCM CONNECTOR B (24P)

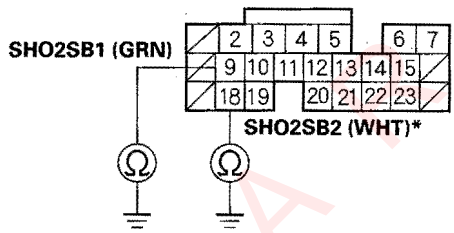

Wire side of female terminals

Is there continuity?

YES — Repair open in the wire between the ECM/PCM (D10) and the secondary HO2S (Sensor 2), then go to step 21.

NO — Repair open in the wire between the ECM/PCM (B9 (B18)*) and the secondary HO2S (Sensor 2), then go to step 21.

19. Turn the ignition switch OFF.

20. Replace the secondary HO2S (Sensor 2) (see page 11-166).

21. Turn the ignition switch ON (II).

22. Reset the ECM/PCM with the HDS.

23. Do the ECM/PCM idle learn procedure (see page 11-239).

24. Start the engine. Hold the engine speed at 3,000 rpm with no load (in Park or neutral) until the radiator fan comes on, then let it idle.

25. Test-drive under these conditions:

- Engine coolant temperature more than 158°F (70°C)
- A/T in D position (M/T in 4th gear)
- Engine speed at 2,000 — 3,000 rpm
- Drive about 10 minutes, then decelerate (with the throttle fully closed) for 5 seconds

(cont'd)

Protected by AP

DTC Troubleshooting (cont'd)

26. Check for Temporary DTCs or DTCs with the HDS.

    Are any Temporary DTCs or DTCs indicated?

    YES—If DTC P0138 and/or P0158* is indicated, check for poor connections or loose terminals at the secondary HO2S (Sensor 2) and the ECM/PCM, then go to step 1. If any other Temporary DTCs or DTCs are indicated, go to the indicated DTC's troubleshooting.

    NO—Go to step 27.

27. Monitor the OBD STATUS for DTC P0138 and/or P0158* in the DTCs MENU with the HDS.

    Does the screen indicate PASSED?

    YES—Troubleshooting is complete. ■

    NO—If the screen indicates FAILED, check for poor connections or loose terminals at the secondary HO2S (Sensor 2) and the ECM/PCM, then go to step 1. If the screen indicates EXECUTING, keep driving until a result comes on. If the screen indicates OUT OF CONDITION, go to step 24 and recheck.

28. Update the ECM/PCM if it does not have the latest software, or substitute a known-good ECM/PCM (see page 11-6).

29. Start the engine. Hold the engine speed at 3,000 rpm with no load (in Park or neutral) until the radiator fan comes on, then let it idle.

30. Test-drive under these conditions:

    - Engine coolant temperature more than 158°F (70°C)
    - A/T in D position (M/T in 4th gear)
    - Engine speed at 2,000—3,000 rpm
    - Drive about 10 minutes, then decelerate (with the throttle fully closed) for 5 seconds

31. Check for Temporary DTCs or DTCs with the HDS.

    Are any Temporary DTCs or DTCs indicated?

    YES—If DTC P0138 and/or P0158* is indicated, check for poor connections or loose terminals at the secondary HO2S (Sensor 2) and the ECM/PCM, then go to step 1. If any other Temporary DTCs or DTCs are indicated, go to the indicated DTC's troubleshooting.

    NO—If the ECM/PCM was updated, troubleshooting is complete. If the ECM/PCM was substituted, replace the original ECM/PCM (see page 11-171). ■

Protected by AP

DTC P0139: Rear Secondary HO2S (Bank 1, Sensor 2) Circuit Slow Response

DTC P0159: Front Secondary HO2S (Bank 2, Sensor 2) Circuit Slow Response

NOTE: Information marked with an asterisk (*) applies to the front bank (Bank 2).

1. Turn the ignition switch ON (II).
2. Clear the DTC with the HDS.
3. Start the engine. Hold the engine speed at 3,000 rpm with no load (in Park or neutral) until the radiator fan comes on, then let it idle.
4. Test-drive under these conditions:
   - Engine coolant temperature more than 158°F (70°C)
   - A/T in D position (M/T in 4th gear)
   - Engine speed at 2,000—3,000 rpm
   - Drive about 10 minutes, then decelerate (with the throttle fully closed) for 5 seconds
5. Monitor the OBD STATUS for DTC P0139 and/or P0159* in the DTCs MENU with the HDS.

   Does the screen indicate FAILED?

   YES—Go to step 6.

   NO—If the screen indicates PASSED, intermittent failure, system is OK at this time. If the screen indicates EXECUTING, keep driving until a result comes on. If the screen indicates OUT OF CONDITION, go to step 3 and recheck.
6. Turn the ignition switch OFF.
7. Replace the secondary HO2S (Sensor 2) (see page 11-166).
8. Turn the ignition switch ON (II).
9. Reset the ECM/PCM with the HDS.
10. Do the ECM/PCM idle learn procedure (see page 11-239).
11. Start the engine. Hold the engine speed at 3,000 rpm with no load (in Park or neutral) until the radiator fan comes on, then let it idle.
12. Test-drive under these conditions:
    - Engine coolant temperature more than 158°F (70°C)
    - A/T in D position (M/T in 4th gear)
    - Engine speed at 2,000—3,000 rpm
    - Drive about 10 minutes, then decelerate (with the throttle fully closed) for 5 seconds
13. Check for Temporary DTCs or DTCs with the HDS.

    Are any Temporary DTCs or DTCs indicated?

    YES—If DTC P0139 and/or P0159* is indicated, check for poor connections or loose terminals at the secondary HO2S (Sensor 2) and the ECM/PCM, then go to step 1. If any other Temporary DTCs or DTCs are indicated, go to the indicated DTC's troubleshooting.

    NO—Go to step 14.
14. Monitor the OBD STATUS for DTC P0139 and/or P0159* in the DTCs MENU with the HDS.

    Does the screen indicate PASSED?

    YES—Troubleshooting is complete. ■

    NO—If the screen indicates FAILED, check for poor connections or loose terminals at the secondary HO2S (Sensor 2) and the ECM/PCM, then go to step 1. If the screen indicates EXECUTING, keep driving until a result comes on. If the screen indicates OUT OF CONDITION, go to step 11 and recheck.

Protected by SAP

DTC Troubleshooting (cont'd)

DTC P0141: Rear Secondary HO2S (Bank 1, Sensor 2) Heater Circuit Malfunction

DTC P0161: Front Secondary HO2S (Bank 2, Sensor 2) Heater Circuit Malfunction

NOTE: Information marked with an asterisk (*) applies to the front bank (Bank 2).

1. Turn the ignition switch ON (II).
2. Clear the DTC with the HDS.
3. Start the engine.
4. Check for Temporary DTCs or DTCs with the HDS.

   Is DTC P0141 and/or P0161 indicated?*

   YES—Go to step 5.

   NO—Intermittent failure, system is OK at this time. Check for poor connections or loose terminals at the secondary HO2S (Sensor 2) and the ECM/PCM. ■
5. Turn the ignition switch OFF.
6. Check these fuses:

   - No. 19 FI ECU (ECM/PCM) (40A) fuse in under-hood fuse/relay box.
   - No. 4 LAF (A/F SENSOR) (15A) fuse in under-dash fuse/relay box.
   - No. 23 IGP (7.5A) fuse in under-dash fuse/relay box.

   Are any of the fuses blown?

   YES—Repair short in the wire between the A/F sensors, secondary HO2S, A/F sensor relay, and the fuses, then go to step 22.

   NO—Go to step 7.
7. Disconnect the secondary HO2S (Sensor 2) 4P connector.
8. At the secondary HO2S (Sensor 2) side, measure resistance between secondary HO2S (Sensor 2) 4P connector terminals No. 3 and No. 4.

   SECONDARY HO2S (SENSOR 2) 4P CONNECTOR

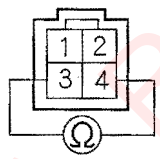

   Terminal side of male terminals

   Is there 5.4—6.6 Ω at room temperature?

   YES—Go to step 9.

   NO—Go to step 21.
9. Check for continuity between body ground and secondary HO2S (Sensor 2) 4P connector terminals No. 3 and No. 4 individually.

   SECONDARY HO2S (SENSOR 2) 4P CONNECTOR

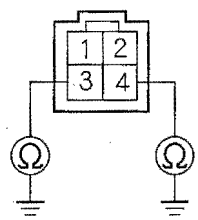

   Terminal side of male terminals

   Is there continuity?

   YES—Go to step 21.

   NO—Go to step 10.

Protected by AR

10. Jump the SCS line with the HDS.

11. Disconnect ECM/PCM connector E (31P).

12. Check for continuity between ECM/PCM connector terminal E9 (E8)* and body ground.

ECM/PCM CONNECTOR E (31P)

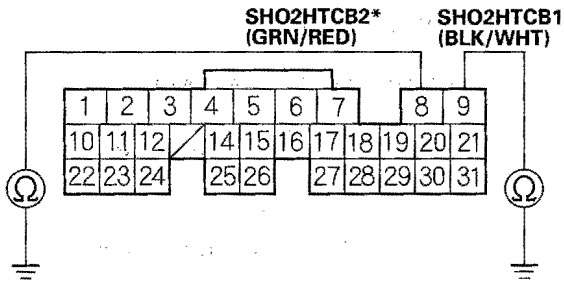

Wire side of female terminals

Is there continuity?

YES—Repair short in the wire between the ECM/PCM (E9 (E8)*) and the secondary HO2S (Sensor 2), then go to step 22.

NO—Go to step 13.

13. Connect secondary HO2S (Sensor 2) 4P connector terminal No. 3 to body ground with a jumper wire.

SECONDARY HO2S (SENSOR 2) 4P CONNECTOR

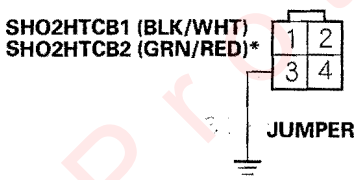

Wire side of female terminals

14. Check for continuity between ECM/PCM connector terminal E9 (E8)* and body ground.

ECM/PCM CONNECTOR E (31P)

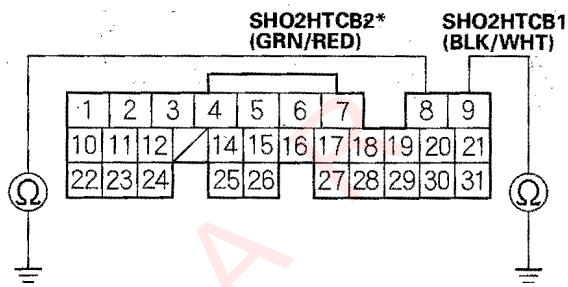

Wire side of female terminals

Is there continuity?

YES—Go to step 15.

NO—Repair open in the wire between the ECM/PCM (E9 (E8)*) and the secondary HO2S (Sensor 2), then go to step 22.

15. Connect secondary HO2S (Sensor 2) 4P connector terminal No. 4 to body ground with a jumper wire.

SECONDARY HO2S (SENSOR 2) 4P CONNECTOR

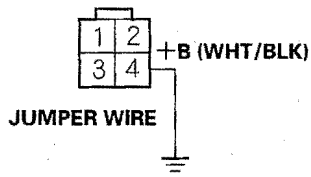

Wire side of female terminals

(cont'd)

Protected by A

DTC Troubleshooting (cont'd)

16. Remove the A/F sensor relay (A).

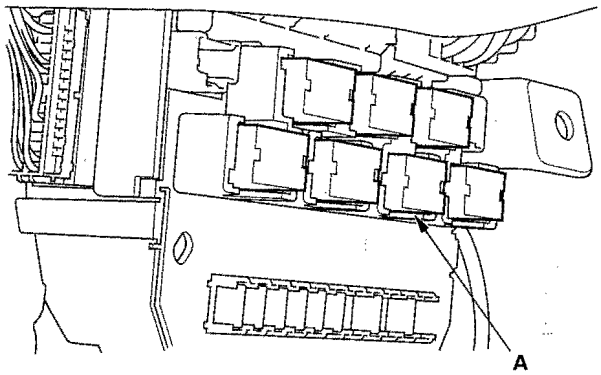

17. Check for continuity between A/F sensor relay terminal No. 2. and body ground.

A/F SENSOR RELAY 4P CONNECTOR

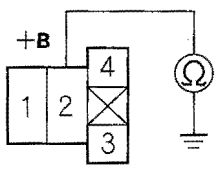

Terminal side of female terminals

Is there continuity?

YES—Go to step 18.

NO—Repair open in the wire between the A/F sensor, secondary HO2S, and the A/F sensor relay, then go to step 22.

18. Disconnect ECM/PCM connector A (31P).

19. Check for continuity between ECM/PCM connector terminal A4 and A/F sensor relay terminal No. 4.

ECM/PCM CONNECTOR A (31P)

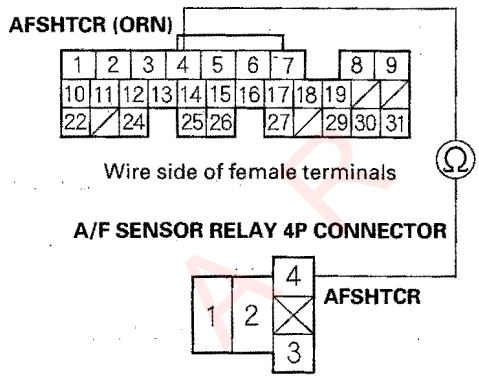

Wire side of female terminals

A/F SENSOR RELAY 4P CONNECTOR

Terminal side of female terminals

Is there continuity?

YES—Go to step 20.

NO—Repair open in the wire between the ECM/PCM (E8) and the A/F sensor relay, then go to step 22.

20. Test the A/F sensor relay (see page 22-75).

Is the A/F sensor relay OK?

YES—Go to step 27.

NO—Replace the A/F sensor relay, then go to step 22.

21. Replace the secondary HO2S (Sensor 2) (see page 11-166).

22. Turn the ignition switch ON (II).

23. Reset the ECM/PCM with the HDS.

24. Do the ECM/PCM idle learn procedure (see page 11-239).

Protected by AR

25. Check for Temporary DTCs or DTCs with the HDS.

    Are any Temporary DTCs or DTCs indicated?

    YES—If DTC P0141 and/or P0161* is indicated, check for poor connections or loose terminals at the secondary HO2S (Sensor 2) and the ECM/PCM, then go to step 1. If any other Temporary DTCs or DTCs are indicated, go to the indicated DTC's troubleshooting.

    NO—Go to step 26.

26. Monitor the OBD STATUS for DTC P0141 and/or P0161* in the DTCs MENU with the HDS.

    Does the screen indicate PASSED?

    YES—Troubleshooting is complete. ■

    NO—If the screen indicates FAILED, check for poor connections or loose terminals at the secondary HO2S (Sensor 2) and the ECM/PCM, then go to step 1. If the screen indicates NOT COMPLETED, go to step 24 and recheck.

27. Update the ECM/PCM if it does not have the latest software, or substitute a known-good ECM/PCM (see page 11-6).

28. Check for Temporary DTCs or DTCs with the HDS.

    Are any Temporary DTCs or DTCs indicated?

    YES—If DTC P0141 and/or P0161* is indicated, check for poor connections or loose terminals at the secondary HO2S (Sensor 2) and the ECM/PCM, then go to step 1. If any other Temporary DTCs or DTCs are indicated, go to the indicated DTC's troubleshooting.

    NO—If the ECM/PCM was updated, troubleshooting is completed. If the ECM/PCM was substituted, replace the original ECM/PCM (see page 11-171). ■

Digitized by A R

DTC Troubleshooting (cont'd)

DTC P0171: Rear Bank (Bank 1) Fuel System Too Lean

DTC P0172: Rear Bank (Bank 1) Fuel System Too Rich

DTC P0174: Front Bank (Bank 2) Fuel System Too Lean

DTC P0175: Front Bank (Bank 2) Fuel System Too Rich

NOTE: If some of the DTCs listed below are stored at the same time as DTC P0171, P0172, P0174, and/or P0175, troubleshoot those DTCs first, then recheck for P0171, P0172, P0174, and/or P0175.
P0107, P0108, P1128, P1129: Manifold absolute pressure (MAP) sensor
P0133, P0153, P2195, P2197, P2237, P2238, P2240, P2241, P2243, P2245, P2247, P2249, P2251, P2252, P2254, P2255, P2627, P2628, P2630, P2631, P2A00, P2A03: Air fuel ratio (A/F) sensor (Sensor 1)
P0134, P0135, P0154, P0155: Air fuel ratio (A/F) sensor (Sensor 1) heater
P0137, P0138, P0139, P0157, P0158, P0159: Secondary HO2S (Sensor 2)
P0141, P0161: Secondary HO2S (Sensor 2) heater
P2646, P2647, P2648, P2649: VTEC system
P0401, P0404, P0406, P2413: Exhaust Gas Recirculation (EGR) system
P2279: Intake air leakage

1. Check the fuel pressure (see page 11-247).

   Is the fuel pressure OK?

   YES—Check the valve clearances and adjust if necessary. If the valve clearances are OK, replace the injectors (see page 11-163), then go to step 2.

   NO—Check these items:

   - If the pressure is too high, replace the fuel pressure regulator (see page 11-256), then go to step 2. If the pressure is too low, check the fuel pump, and the fuel feed pipe, then go to step 2.

2. Turn the ignition switch ON (II).

3. Reset the ECM/PCM with the HDS.

4. Do the ECM/PCM idle learn procedure (see page 11-239).

5. Start the engine. Hold the engine speed at 3,000 rpm with no load (in Park or neutral) until the radiator fan comes on, then let it idle.

6. Test-drive under these conditions:

   - Engine coolant temperature more than 158°F (70°C)
   - A/T in D position (M/T in 5th gear)
   - Drive at a steady speed between 25—55 mph (40—88 km/h) for 5 minutes, then drive at a steady speed between 15—75 mph (24—120 km/h) for 15 minutes.

   NOTE: DTC P0171, P0172, P0174, and/or P0175 may take up to 40 minutes of test driving to set. Use the HDS to monitor the AF FB AVE for 15 minutes of driving. If the AF FB AVE stays within 10 % of 1.0 (0.0 %), there is no problem at this time.

7. Check for Temporary DTCs or DTCs with the HDS.

   Are any Temporary DTCs or DTCs indicated?

   YES—If DTC P0171, P0172, P0174, or P0175 is indicated, go to step 1. If any other Temporary DTCs or DTCs are indicated, go to the indicated DTC's troubleshooting.

   NO—Troubleshooting is complete. ■

Protected by A P

DTC P0300: Random Misfire and Any Combination of the Following:

DTC P0301: No. 1 Cylinder Misfire Detected

DTC P0302: No. 2 Cylinder Misfire Detected

DTC P0303: No. 3 Cylinder Misfire Detected

DTC P0304: No. 4 Cylinder Misfire Detected

DTC P0305: No. 5 Cylinder Misfire Detected

DTC P0306: No. 6 Cylinder Misfire Detected

Special Tools Required
- Pressure gauge adapter 07NAJ-P07010A
- A/T low pressure gauge w/panel 07406-0070300
- A/T pressure hose 07406-0020201
- A/T pressure hose, 2,210 mm 07MAJ-PY4011A
- A/T pressure adapter 07MAJ-PY40120
- Oil pressure hose 07ZAJ-S5A0200

NOTE:
- If the misfire is frequent enough to trigger detection of increased emissions during two consecutive driving cycles, the MIL will come on, and DTC P0300 (and some combination of P0301 through P0306) will be stored.
- If the misfire is frequent enough to damage the catalyst, the MIL will blink whenever the misfire occurs, and DTC P0300 (and some combination of P0301 through P0306) will be stored. When the misfire stops, the MIL will remain on.
- Troubleshoot the following DTCs first, if any of them were stored along with the random misfire DTC(s):

P0107, P0108, P1128, P1129: Manifold absolute pressure (MAP) sensor
P0171, P0172: Fuel system
P0335, P0339, P0385, P0389: Crankshaft position (CKP) sensor A/B
P0506, P0507: Idle control system
P0340, P0344: Camshaft position (CMP) sensor
P0401, P0404, P0406, P2413: Exhaust Gas Recirculation (EGR) system

1. Note this freeze data:
   - Engine speed
   - Vehicle speed
   - Throttle position
   - CLV
2. Clear the DTC with the HDS.
3. Start the engine with no load (in Park or neutral), then let it idle.
4. Monitor the OBD STATUS for DTC P0301, P0302, P0303, P0304, P0305, or P0306 in the DTCs MENU with the HDS.

   Does the screen indicate FAILED?

   YES—Go to step 9.

   NO—If the screen indicates PASSED, go to step 5. If the screen indicates EXECUTING, keep driving until a result comes on. If the screen indicates OUT OF CONDITION, wait for several minutes, then recheck.
5. Check the CYL1 MISFIRE, CYL2 MISFIRE, CYL3 MISFIRE, CYL4 MISFIRE, CYL5 MISFIRE, and/or CYL6 MISFIRE in the DATA LIST for 10 minutes with the HDS.

   Does CYL1 MISFIRE, CYL2 MISFIRE, CYL3 MISFIRE, CYL4 MISFIRE, CYL5 MISFIRE, and/or CYL6 MISFIRE show misfire counts?

   YES—Go to step 9.

   NO—Go to step 6.
6. Test-drive the vehicle for several minutes in the range of the recorded freeze data.

(cont'd)

Scanned by AR

DTC Troubleshooting (cont'd)

7. Monitor the OBD STATUS for DTC P0301, P0302, P0303, P0304, P0305, or P0306 in the DTCs MENU with the HDS.

   Does the screen indicate FAILED?

   YES – Go to step 9.

   NO – If the screen indicates PASSED, go to step 8. If the screen indicates EXECUTING, keep driving until a result comes on. If the screen indicates OUT OF CONDITION, go to step 6 and recheck.

8. Check the CYL1 MISFIRE, CYL2 MISFIRE, CYL3 MISFIRE, CYL4 MISFIRE, CYL5 MISFIRE, and/or CYL6 MISFIRE in the DATA LIST for 10 minutes with the HDS.

   Does CYL1 MISFIRE, CYL2 MISFIRE, CYL3 MISFIRE, CYL4 MISFIRE, CYL5 MISFIRE, and/or CYL6 MISFIRE show misfire counts?

   YES – Go to step 9.

   NO – Intermittent failure, system is OK at this time. ■

9. Turn the ignition switch OFF.

10. Check the fuel quality.

    Is the quality good?

    YES – Go to step 11.

    NO – Drain the tank, and fill it with a known-good fuel, then go to step 20.

11. Inspect the spark plugs (see page 4-21). If the spark plugs are fouled or worn, replace them.

12. Test-drive the vehicle for several minutes in the range of the recorded freeze data.

13. Check the CYL1 MISFIRE, CYL2 MISFIRE, CYL3 MISFIRE, CYL4 MISFIRE, CYL5 MISFIRE, and/or CYL6 MISFIRE in the DATA LIST for 10 minutes with the HDS.

    Does CYL1 MISFIRE, CYL2 MISFIRE, CYL3 MISFIRE, CYL4 MISFIRE, CYL5 MISFIRE, and/or CYL6 MISFIRE show misfire counts?

    YES – Go to step 14.

    NO – Go to step 20.

14. Check the fuel pressure (see page 11-247).

    Is the fuel pressure OK?

    YES – Go to step 15.

    NO –
    - If the pressure is too high, replace the fuel pressure regulator (see page 11-256) then go to step 20.
    - If the pressure is too low, check the fuel pump, the fuel feed pipe, and the fuel filter. If they are OK, replace the fuel pressure regulator (see page 11-256), then go to step 20.

15. Turn the ignition switch OFF.

Protected by A R

16. Remove the VTEC oil pressure switch (A), and install the special tools as shown, then install the VTEC oil pressure switch (A) in the pressure gauge adapter (B).

    NOTE: Install the switch in the reverse order of removal with a new O-ring.

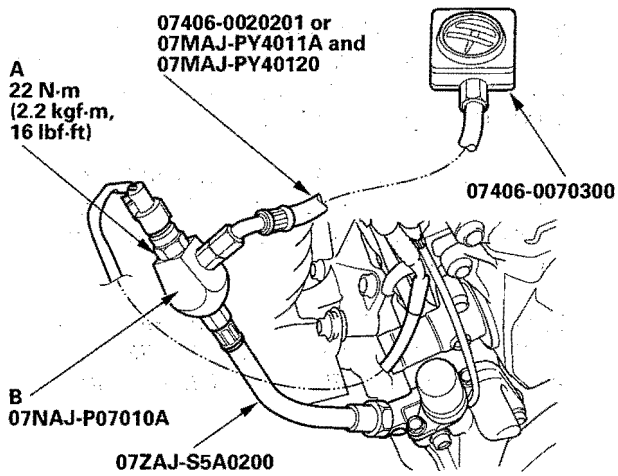

17. Reconnect the VTEC oil pressure switch 2P connector.

18. Start the engine. Hold the engine at 3,000 rpm with no load (in Park or neutral) until the radiator fan comes on.

19. Check the oil pressure at engine speeds of 1,000 and 2,000 rpm. Keep the measuring time as short as possible (less than 1 minute) because the engine is running with no load.

    Is the oil pressure below 49 kPa (0.5 kgf/cm², 7 psi) ?

    YES—Check for air in the fuel line, then go to step 20.

    NO—Inspect the VTEC system (see page 6-7), then go to step 20.

20. Turn the ignition switch ON (II).

21. Reset the ECM/PCM with the HDS.

22. Clear the CKP pattern with the HDS.

23. Do the ECM/PCM idle learn procedure (see page 11-239).

24. Do the CKP pattern learn procedure (see page 11-4).

25. Test-drive the vehicle for several minutes in the range of the recorded freeze data.

26. Check for Temporary DTCs or DTCs with the HDS.

    Are any Temporary DTCs or DTCs indicated?

    YES—If DTC P0301, P0302, P0303, P0304, P0305, or P0306 are indicated, check for poor connections or loose terminals at the ignition coil, the injector, and the PCM, then go to troubleshooting DTC P0301, P0302, P0303, P0304, P0305 or P0306 (see page 11-112). If any other Temporary DTCs or DTCs are indicated, go to the indicated DTC's troubleshooting.

    NO—Go to step 27.

27. Monitor the OBD STATUS for DTC P0301, P0302, P0303, P0304, P0305, or P0306 in the DTCs MENU with the HDS.

    Does the screen indicate PASSED?

    YES—Troubleshooting is complete.■

    NO—If the screen indicates FAILED, go to step 1 and recheck. If the screen indicates EXECUTING, keep driving until a result comes on. If the screen indicates OUT OF CONDITION, go to step 25 and recheck.

Protected by AR

DTC Troubleshooting (cont'd)

DTC P0301: No. 1 Cylinder Misfire Detected

DTC P0302: No. 2 Cylinder Misfire Detected

DTC P0303: No. 3 Cylinder Misfire Detected

DTC P0304: No. 4 Cylinder Misfire Detected

DTC P0305: No. 5 Cylinder Misfire Detected

DTC P0306: No. 6 Cylinder Misfire Detected

1. Note this freeze data:

   - Engine speed
   - Vehicle speed
   - Throttle position
   - CLV

2. Clear the DTC with the HDS.

3. Start the engine with no load (in Park or neutral), then let it idle.

4. Monitor the OBD STATUS for DTC P0301, P0302, P0303, P0304, P0305, or P0306 in the DTCs MENU with the HDS.

   Does the screen indicate FAILED?

   YES – Go to step 9.

   NO – If the screen indicates PASSED, go to step 5. If the screen indicates EXECUTING, keep driving until a result comes on. If the screen indicates OUT OF CONDITION, wait for several minutes, and recheck.

5. Check the CYL1 MISFIRE, CYL2 MISFIRE, CYL3 MISFIRE, CYL4 MISFIRE, CYL5 MISFIRE, and/or CYL6 MISFIRE in the DATA LIST for 10 minutes with the HDS.

   Does CYL1 MISFIRE, CYL2 MISFIRE, CYL3 MISFIRE, CYL4 MISFIRE, CYL5 MISFIRE, and/or CYL6 MISFIRE show misfire counts?

   YES – Go to step 9.

   NO – Go to step 6.

6. Test-drive the vehicle for several minutes in the range of the recorded freeze data.

7. Monitor the OBD STATUS for DTC P0301, P0302, P0303, P0304, P0305, or P0306 in the DTCs MENU with the HDS.

   Does the screen indicate FAILED?

   YES – Go to step 9.

   NO – If the screen indicates PASSED, go to step 8. If the screen indicates EXECUTING, keep driving until a result comes on. If the screen indicates OUT OF CONDITION, go to step 6 and recheck.

8. Check the CYL1 MISFIRE, CYL2 MISFIRE, CYL3 MISFIRE, CYL4 MISFIRE, CYL5 MISFIRE, and/or CYL6 MISFIRE in the DATA LIST for 10 minutes with the HDS.

   Does CYL1 MISFIRE, CYL2 MISFIRE, CYL3 MISFIRE, CYL4 MISFIRE, CYL5 MISFIRE, and/or CYL6 MISFIRE show misfire counts?

   YES – Go to step 9.

   NO – Intermittent failure, system is OK at this time. Check the fuel and ignition system circuit connectors for loose wires or poor connections. ■

9. Turn the ignition switch OFF.

10. Exchange the ignition coil from the problem cylinder with one from another cylinder.

11. Test-drive the vehicle for several minutes in the range of the recorded freeze data.

Protected by AP

12. Check the CYL1 MISFIRE, CYL2 MISFIRE, CYL3 MISFIRE, CYL4 MISFIRE, CYL5 MISFIRE, and/or CYL6 MISFIRE in the DATA LIST for 10 minutes with the HDS.

    Does CYL1 MISFIRE, CYL2 MISFIRE, CYL3 MISFIRE, CYL4 MISFIRE, CYL5 MISFIRE, and/or CYL6 MISFIRE show misfire counts?

    YES—Go to step 13.

    NO—Intermittent misfire due to poor contact at the ignition coil connector (no misfire at this time). Make sure the coil connections are secure. ■

13. Determine which cylinder had the misfire.

    Does the misfire occur in the cylinder where the ignition coil was moved?

    YES—Replace the faulty ignition coil (see page 4-19), then go to step 60.

    NO—Go to step 14.

14. Turn the ignition switch OFF.

15. Exchange the spark plug from the problem cylinder with one from another cylinder.

16. Test-drive the vehicle for several minutes in the range of the recorded freeze data.

17. Check the CYL1 MISFIRE, CYL2 MISFIRE, CYL3 MISFIRE, CYL4 MISFIRE, CYL5 MISFIRE, and/or CYL6 MISFIRE in the DATA LIST for 10 minutes with the HDS.

    Does CYL1 MISFIRE, CYL2 MISFIRE, CYL3 MISFIRE, CYL4 MISFIRE, CYL5 MISFIRE, and/or CYL6 MISFIRE show misfire counts?

    YES—Go to step 18.

    NO—Intermittent misfire due to spark plug fouling (no misfire at this time). ■

18. Determine which cylinder had the misfire.

    Does the misfire occur in the cylinder where the spark plug was moved?

    YES—Replace the faulty spark plug, then go to step 60.

    NO—Go to step 19.

19. Turn the ignition switch OFF.

20. Exchange the injector from the problem cylinder with one from the another cylinder.

21. Start the engine, and let it idle for 2 minutes.

22. Test-drive the vehicle for several minutes in the range of the recorded freeze data.

23. Check the CYL1 MISFIRE, CYL2 MISFIRE, CYL3 MISFIRE, CYL4 MISFIRE, CYL5 MISFIRE, and/or CYL6 MISFIRE in the DATA LIST for 10 minutes with the HDS.

    Does CYL1 MISFIRE, CYL2 MISFIRE, CYL3 MISFIRE, CYL4 MISFIRE, CYL5 MISFIRE, and/or CYL6 MISFIRE show misfire counts?

    YES—Go to step 24.

    NO—Intermittent misfire due to bad contact in the injector connector (no misfire at this time). Check for poor connections or loose terminals at the injector. ■

24. Determine which cylinder had the misfire.

    Does the misfire occur in the cylinder where the injector was exchanged?

    YES—Replace the faulty injector (see page 11-163), then go to step 60.

    NO—Go to step 25.

25. Turn the ignition switch OFF.

26. Disconnect the ignition coil 3P connector from the problem cylinder.

27. Turn the ignition switch ON (II).

(cont'd)

Protected by AR

DTC Troubleshooting (cont'd)

28. Measure voltage between ignition coil 3P connector terminal No. 3 and body ground.

IGNITION COIL 3P CONNECTOR

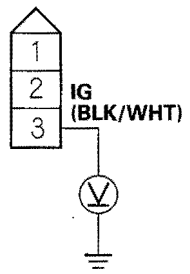

Wire side of female terminals

Is there battery voltage?

YES—Go to step 29.

NO—Repair open in the wire between the ignition coil and the ignition coil relay, then go to step 60.

29. Turn the ignition switch OFF.

30. Check for continuity between ignition coil 3P connector terminal No. 2 and body ground.

IGNITION COIL 3P CONNECTOR

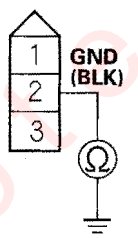

Wire side of female terminals

Is there continuity?

YES—Go to step 31.

NO—Repair open in the wire between the ignition coil and G101, then go to step 60.

31. Turn the ignition switch OFF.

32. Jump the SCS line with the HDS.

33. Disconnect ECM/PCM connector E (31P).

34. Check for continuity between body ground and the appropriate ECM/PCM connector terminal (see table).

ECM/PCM CONNECTOR E (31P)

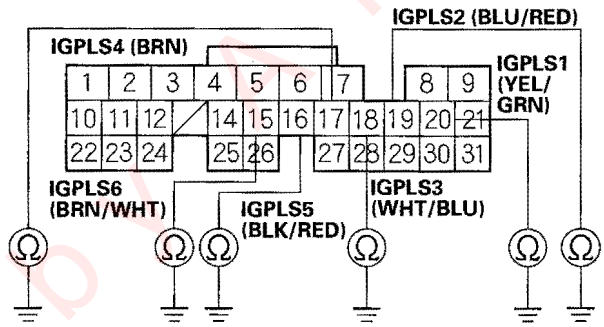

Wire side of female terminals

PROBLEM CYLINDER	DTC	ECM/PCM TERMINAL	WIRE COLOR
No. 1	P0301	E20	YEL/GRN
No. 2	P0302	E19	BLU/RED
No. 3	P0303	E18	WHT/BLU
No. 4	P0304	E17	BRN
No. 5	P0305	E16	BLK/RED
No. 6	P0306	E15	BRN/WHT

Is there continuity?

YES—Repair short in the wire between the ECM/PCM and the ignition coil, then go to step 60.

NO—Go to step 35.

Protected by R

35. Connect the appropriate ignition coil 3P connector terminal No. 1 to body ground with a jumper wire (see table).

IGNITION COIL 3P CONNECTOR

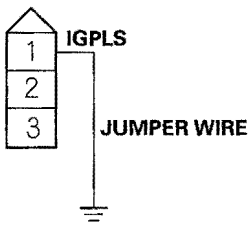

Wire side of female terminals

PROBLEM CYLINDER	DTC	ECM/PCM TERMINAL	WIRE COLOR
No. 1	P0301	E20	YEL/GRN
No. 2	P0302	E19	BLU/RED
No. 3	P0303	E18	WHT/BLU
No. 4	P0304	E17	BRN
No. 5	P0305	E16	BLK/RED
No. 6	P0306	E15	BRN/WHT

36. Check for continuity between body ground and the appropriate ECM/PCM connector terminal (see table).

ECM/PCM CONNECTOR E (31P)

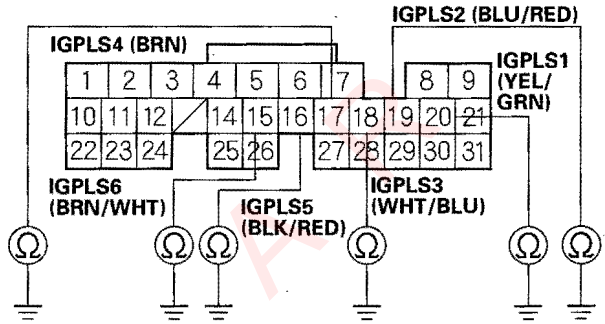

Wire side of female terminals

PROBLEM CYLINDER	DTC	ECM/PCM TERMINAL	WIRE COLOR
No. 1	P0301	E20	YEL/GRN
No. 2	P0302	E19	BLU/RED
No. 3	P0303	E18	WHT/BLU
No. 4	P0304	E17	BRN
No. 5	P0305	E16	BLK/RED
No. 6	P0306	E15	BRN/WHT

Is there continuity?

YES—Go to step 37.

NO—Repair open in the wire between the ECM/PCM and the ignition coil, then go to step 60.

(cont'd)

Protected by AP

DTC Troubleshooting (cont'd)

37. Reconnect the ignition coil 3P connector and ECM/PCM connector E (31P).

38. Do an engine compression and a cylinder leakdown test.

    Did the engine pass both tests?

    YES – Go to step 39.

    NO – Repair the engine, then go to step 60.

39. Do the VTEC rocker arm test (see page 6-7).

    Did the engine pass the test?

    YES – Go to step 40.

    NO – Repair the VTEC rocker arm, then go to step 60.

40. Turn the ignition switch OFF.

41. Jump the SCS line with the HDS.

42. Disconnect ECM/PCM connector E (31P).

43. Turn the ignition switch ON (II).

44. Measure voltage between body ground and the appropriate ECM/PCM connector terminal (see table).

ECM/PCM CONNECTOR E (31P)

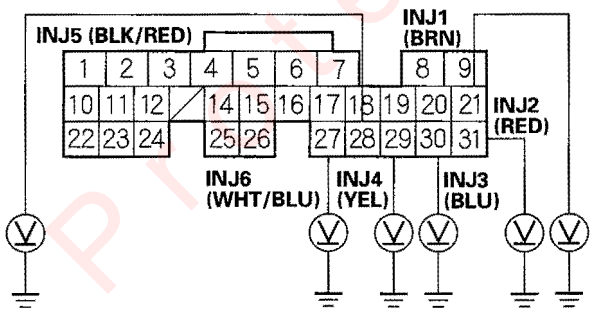

Wire side of female terminals

PROBLEM CYLINDER	DTC	ECM/PCM TERMINAL	WIRE COLOR
No. 1	P0301	E21	BRN
No. 2	P0302	E31	RED
No. 3	P0303	E30	BLU
No. 4	P0304	E29	YEL
No. 5	P0305	E28	BLK/RED
No. 6	P0306	E27	WHT/BLU

Is there battery voltage?

YES – Go to step 54.

NO – Go to step 45.

45. Turn the ignition switch OFF.

46. Remove the intake manifold (see page 9-3).

47. Disconnect the injector 2P connector from the problem cylinder.

48. Turn the ignition switch ON (II).

49. Measure voltage between injector 2P connector terminal No. 1 and body ground.

INJECTOR 2P CONNECTOR

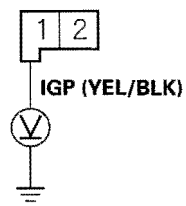

Wire side of female terminals

Is there battery voltage?

YES – Go to step 50.

NO – Repair open in the wire between the injector and the PGM-FI main relay, then go to step 60.

Protected by AR

50. Turn the ignition switch OFF.

51. Check for continuity between body ground and the appropriate ECM/PCM connector terminal (see table).

ECM/PCM CONNECTOR E (31P)

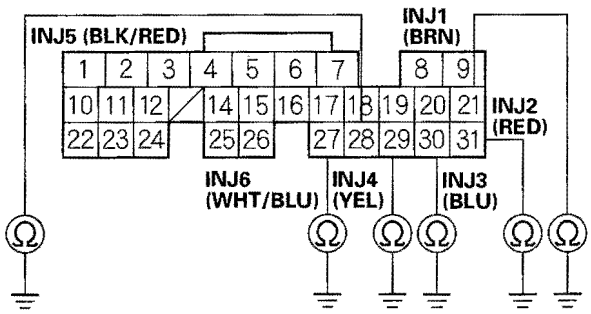

Wire side of female terminals

PROBLEM CYLINDER	DTC	ECM/PCM TERMINAL	WIRE COLOR
No. 1	P0301	E21	BRN
No. 2	P0302	E31	RED
No. 3	P0303	E30	BLU
No. 4	P0304	E29	YEL
No. 5	P0305	E28	BLK/RED
No. 6	P0306	E27	WHT/BLU

Is there continuity?

YES—Repair short in the wire between the ECM/PCM and the injector, then go to step 60.

NO—Go to step 52.

52. Connect the appropriate injector 2P connector terminal No. 2 to body ground with a jumper wire (see table).

INJECTOR 2P CONNECTOR

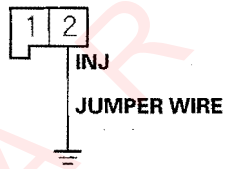

Wire side of female terminals

PROBLEM CYLINDER	DTC	WIRE COLOR
No. 1	P0301	BRN
No. 2	P0302	RED
No. 3	P0303	BLU
No. 4	P0304	YEL
No. 5	P0305	BLK/RED
No. 6	P0306	WHT/BLU

(cont'd)

Protected by AR

DTC Troubleshooting (cont'd)

53. Check for continuity between body ground and the appropriate ECM/PCM connector terminal (see table).

ECM/PCM CONNECTOR E (31P)

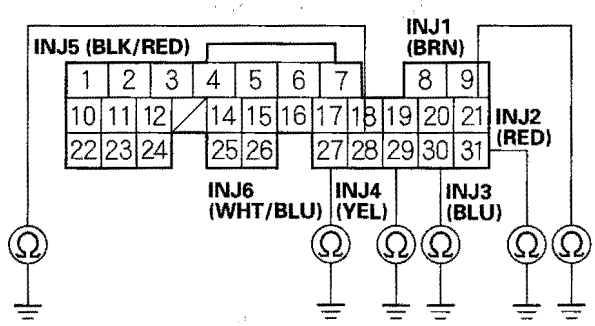

Wire side of female terminals

PROBLEM CYLINDER	DTC	ECM/PCM TERMINAL	WIRE COLOR
No. 1	P0301	E21	BRN
No. 2	P0302	E31	RED
No. 3	P0303	E30	BLU
No. 4	P0304	E29	YEL
No. 5	P0305	E28	BLK/RED
No. 6	P0306	E27	WHT/BLU

Is there continuity?

YES—Go to step 54.

NO—Repair open in the wire between the ECM/PCM and the injector, then go to step 60.

54. Measure the resistance between injector 2P connector terminals No. 1 and No. 2.

INJECTOR 2P CONNECTOR

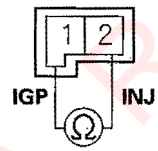

Terminal side of male terminals

Is there 10— 13 Ω ?

YES—Go to step 55.

NO—Replace the injector (see page 11-163), then go to step 60.

55. Substitute a known-good injector from another cylinder to the problem cylinder.

56. Reconnect ECM/PCM connector E (31P).

57. Start the engine, and let it idle for 2 minutes.

58. Test-drive the vehicle for several minutes in the range of the recorded freeze data.

59. Check the CYL1 MISFIRE, CYL2 MISFIRE, CYL3 MISFIRE, CYL4 MISFIRE, CYL5 MISFIRE, and/or CYL6 MISFIRE in the DATA LIST for 10 minutes with the HDS.

Does CYL1 MISFIRE, CYL2 MISFIRE, CYL3 MISFIRE, CYL4 MISFIRE, CYL5 MISFIRE, and/or CYL6 MISFIRE show misfire counts?

YES—Go to step 68.

NO—Replace the original injector (see page 11-163), then go to step 60.

Protected by AR

60. Turn the ignition switch ON (II).

61. Reset the ECM/PCM with the HDS.

62. Clear the CKP pattern with the HDS.

63. Do the ECM/PCM idle learn procedure (see page 11-239).

64. Do the CKP pattern learn procedure (see page 11-4).

65. Test-drive the vehicle for several minutes in the range of the recorded freeze data.

66. Check for Temporary DTCs or DTCs with the HDS.

    Are any Temporary DTCs or DTCs indicated?

    YES—If DTC P0301, P0302, P0303, P0304, P0305, or P0306 are indicated, check for poor connections or loose terminals at the ignition coil, the injector, and the ECM/PCM, then go to troubleshooting DTC P0301, P0302, P0303, P0304, P0305, or P0306 (see page 11-109). If any other Temporary DTCs or DTCs are indicated, go to the indicated DTC's troubleshooting.

    NO—Go to step 67.

67. Monitor the OBD STATUS for DTC P0301, P0302, P0303, P0304, P0305, or P0306 in the DTCs MENU with the HDS.

    Does the screen indicate PASSED?

    YES—Troubleshooting is complete.■

    NO—If the screen indicates FAILED, go to step 1 and recheck. If the screen indicates EXECUTING, keep driving until a result comes on. If the screen indicates OUT OF CONDITION, go to step 65 and recheck.

68. Update the ECM/PCM if it does not have the latest software, or substitute a known-good ECM/PCM (see page 11-6).

69. Test-drive the vehicle for several minutes in the range of the recorded freeze data.

70. Check for Temporary DTCs or DTCs with the HDS.

    Are any Temporary DTCs or DTCs indicated?

    YES—If DTC P0301, P0302, P0303, P0304, P0305, or P0306 are indicated, check for poor connections or loose terminals at the injector, the ignition coil, and the ECM/PCM, then go to step 1. If any other Temporary DTCs or DTCs are indicated, go to the indicated DTC's troubleshooting.

    NO—If the ECM/PCM was updated, troubleshooting is complete. If the ECM/PCM was substituted, replace the original ECM/PCM (see page 11-171).■

Protected by M.R.

DTC Troubleshooting (cont'd)

DTC P0325: Knock Sensor Circuit Malfunction

1. Turn the ignition switch ON (II).
2. Clear the DTC with the HDS.
3. Start the engine. Hold the engine speed at 3,000 rpm with no load (in Park or neutral) until the radiator fan comes on, then let it idle.
4. Hold the engine at 3,000—4,000 rpm for at least 60 seconds.
5. Check for Temporary DTCs or DTCs with the HDS.

   Is DTC P0325 indicated?

   YES—Go to step 6.

   NO—Intermittent failure, system is OK at this time. Check for poor connections or loose terminals at the knock sensor and the ECM/PCM.■
6. Turn the ignition switch OFF.
7. Jump the SCS line with the HDS.
8. Disconnect the knock sensor subharness 1P connector.
9. Disconnect ECM/PCM connector B (24P).
10. Check for continuity between ECM/PCM connector terminal B6 and body ground.

ECM/PCM CONNECTOR B (24P)

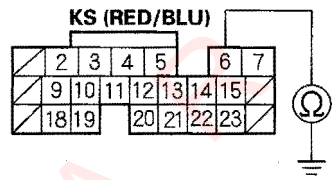

Wire side of female terminals

Is there continuity?

YES—Repair short in the wire between the ECM/PCM (B6) and the knock sensor, then go to step 17.

NO—Go to step 11.

11. Connect the knock sensor subharness 1P connector terminal to body ground with a jumper wire.

KNOCK SENSOR SUBHARNESS 1P CONNECTOR

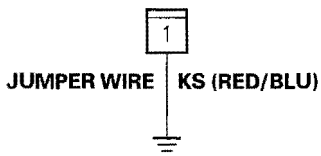

Wire side of female terminals

Protected by A

12. Check for continuity between ECM/PCM connector terminal B6 and body ground.

ECM/PCM CONNECTOR B (24P)

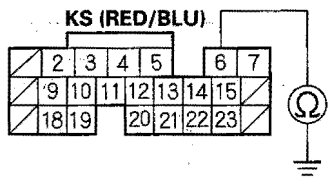

Wire side of female terminals

Is there continuity?

YES—Go to step 13.

NO—Repair open in the wire between the ECM/PCM (B6) and the knock sensor, then go to step 17.

13. Remove the intake manifold (see page 9-3).

14. Check the knock sensor subharness for an open or short.

Is the harness OK?

YES—Go to step 15.

NO—Repair the knock sensor subharness, then go to step 16.

15. Replace the knock sensor (see page 11-168).

16. Install the intake manifold (see page 9-4).

17. Turn the ignition switch ON (II).

18. Reset the ECM/PCM with the HDS.

19. Do the ECM/PCM idle learn procedure (see page 11-239).

20. Start the engine. Hold the engine speed at 3,000 rpm with no load (in Park or neutral) until the radiator fan comes on, then let it idle.

21. Hold the engine at 3,000—4,000 rpm for at least 60 seconds.

22. Check for Temporary DTCs or DTCs with the HDS.

Are any Temporary DTCs or DTCs indicated?

YES—If DTC P0325 is indicated, go to step 24. If any other Temporary DTCs or DTCs are indicated, go to the indicated DTC's troubleshooting.

NO—Go to step 23.

23. Monitor the OBD STATUS for DTC P0325 in the DTCs MENU with the HDS.

Does the screen indicate PASSED?

YES—Troubleshooting is complete. ■

NO—If the screen indicates FAILED, go to step 1. If the screen indicates NOT COMPLETED, go to step 20 and recheck.

24. Update the ECM/PCM if it does not have the latest software, or substitute a known-good ECM/PCM (see page 11-6).

25. Start the engine. Hold the engine speed at 3,000 rpm with no load (in Park or neutral) until the radiator fan comes on, then let it idle.

26. Hold the engine at 3,000—4,000 rpm for at least 60 seconds.

27. Check for Temporary DTCs or DTCs with the HDS.

Are any Temporary DTCs or DTCs indicated?

YES—If DTC P0325 is indicated, check for poor connections or loose terminals at the knock sensor and the ECM/PCM, then go to step 1. If any other Temporary DTCs or DTCs are indicated, go to the indicated DTC's troubleshooting.

NO—If the ECM/PCM was updated, troubleshooting is complete. If ECM/PCM was substituted, replace the original ECM/PCM (see page 11-171). ■

Protected by AR

DTC Troubleshooting (cont'd)

DTC P0335: CKP Sensor A No Signal

DTC P0385: CKP Sensor B No Signal

NOTE: Information marked with an asterisk (*) applies to CKP sensor B.

1. Turn the ignition switch ON (II).
2. Clear the DTC with the HDS.
3. Start the engine.
4. Check for Temporary DTCs or DTCs with the HDS.

   Is DTC P0335 and/or P0385 indicated?

   YES—Go to step 5.

   NO—Intermittent failure, system is OK at this time. Check for poor connections or loose terminals at CKP sensor A/B and the ECM/PCM. ■
5. Turn the ignition switch OFF.
6. Disconnect the CKP sensor A/B 6P connector (see page 11-168).
7. Turn the ignition switch ON (II).
8. Measure voltage between CKP sensor A/B 6P connector terminal No. 6 (No. 3)* and body ground.

CKP SENSOR A/B 6P CONNECTOR

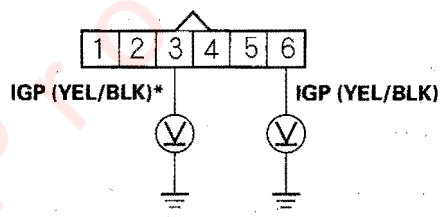

Wire side of female terminals

Is there battery voltage?

YES—Go to step 9.

NO—Repair open in the wire between CKP sensor A/B and PGM-FI main relay 1 (FI MAIN), then go to step 19.

9. Measure voltage between CKP sensor A/B 6P connector terminal No. 5 (No. 2)* and body ground.

CKP SENSOR A/B 6P CONNECTOR

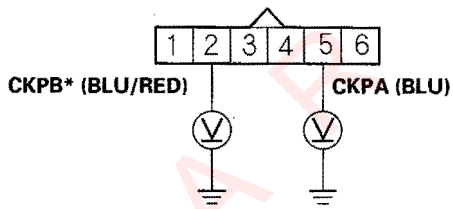

Wire side of female terminals

Is there about 5 V?

YES—Go to step 10.

NO—Go to step 11.

10. Measure voltage between CKP sensor A/B 6P connector terminals No. 4 (No. 1)* and No. 6 (No. 3)*.

CKP SENSOR A/B 6P CONNECTOR

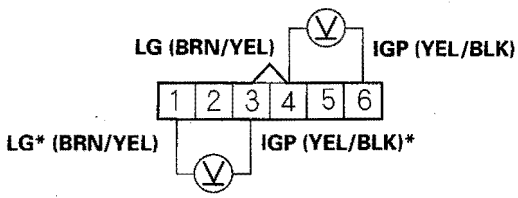

Wire side of female terminals

Is there battery voltage?

YES—Go to step 16.

NO—Repair open in the wire between CKP sensor A/B and G101, then go to step 19.

Protected by A B

11. Measure voltage between ECM/PCM connector terminal D13 (D1)* and body ground.

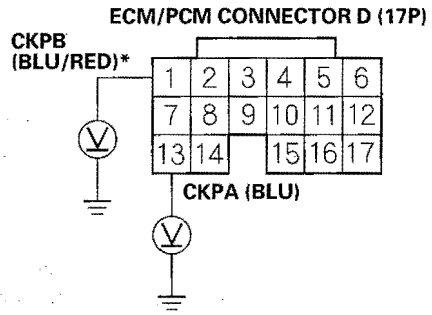

Wire side of female terminals

Is there about 5 V?

YES—Repair open in the wire between the ECM/PCM (D13 (D1)*) and CKP sensor A/B, then go to step 19.

NO—Go to step 12.

12. Turn the ignition switch OFF.
13. Jump the SCS line with the HDS.
14. Disconnect ECM/PCM connector D (17P).
15. Check for continuity between ECM/PCM connector terminal D13 (D1)* and body ground.

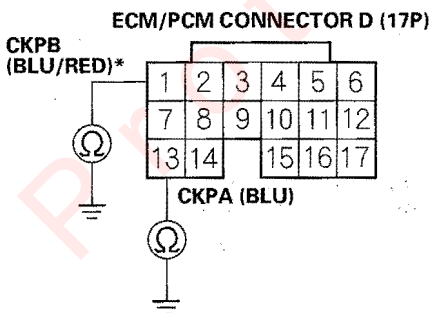

Wire side of female terminals

Is there continuity?

YES—Repair short in the wire between the ECM/PCM (D13 (D1)*) and CKP sensor A/B, then go to step 18.

NO—Go to step 24.

16. Turn the ignition switch OFF.
17. Replace CKP sensor A/B (see page 11-168).
18. Turn the ignition switch ON (II).
19. Reset the ECM/PCM with the HDS.
20. Clear the CKP pattern with the HDS.
21. Do the ECM/PCM idle learn procedure (see page 11-239).
22. Do the CKP pattern learn procedure (see page 11-4).
23. Check for Temporary DTCs or DTCs with the HDS.

Are any Temporary DTCs or DTCs indicated?

YES—If DTC P0335 and/or P0385* is indicated, check for poor connections or loose terminals at CKP sensor A/B and the ECM/PCM, then go to step 1. If any other Temporary DTCs or DTCs are indicated, go to the indicated DTC's troubleshooting.

NO—Troubleshooting is complete. ■

24. Update the ECM/PCM if it does not have the latest software, or substitute a known-good ECM/PCM (see page 11-6).
25. Check for Temporary DTCs or DTCs with the HDS.

Are any Temporary DTCs or DTCs indicated?

YES—If DTC P0335 and/or P0385* is indicated, check for poor connections or loose terminals at CKP sensor A/B and the ECM/PCM, then go to step 1. If any other Temporary DTCs or DTCs are indicated, go to the indicated DTC's troubleshooting.

NO—If the ECM/PCM was updated, troubleshooting is complete. If the ECM/PCM was substituted, replace the original ECM/PCM (see page 11-171). ■

Protected by AP

DTC Troubleshooting (cont'd)

DTC P0339: CKP Sensor A Intermittent Interruption

DTC P0389: CKP Sensor B Intermittent Interruption

NOTE: Information marked with an asterisk (*) applies to CKP sensor B.

1. Note these freeze data:
   - Engine speed
   - Vehicle speed
2. Clear the DTC with the HDS.
3. Start the engine, and let it idle for 10 seconds.
4. Check the CKP A or B* NOISE count in the DATA LIST with the HDS.

   Are 0 counts indicated?

   YES—Go to step 7.

   NO—Go to step 5.
5. Test-drive the vehicle for several minutes in the range of the recorded freeze data.
6. Check the CKP A or B* NOISE count in the DATA LIST with the HDS.

   Are 0 counts indicated?

   YES—Go to step 7.

   NO—Intermittent failure, system is OK at this time. Check for poor connections or loose terminals at CKP sensor A/B and the ECM/PCM. ■
7. Check for poor or loose connections at these connectors and terminals:
   - CKP sensor A/B
   - ECM/PCM
   - Engine ground
   - Body ground

   Are the connections OK?

   YES—Go to step 8.

   NO—Reconnect the connectors or terminals, then go to step 11.
8. Check for damage to the CKP sensor A/B pulse plate on the timing belt drive pulley (see page 6-26).

   Is there damage?

   YES—Replace the CKP sensor A/B pulse plate/ timing belt drive pulley (see page 6-26), then go to step 11.

   NO—Go to step 9.
9. Turn the ignition switch OFF.
10. Replace CKP sensor A/B (see page 11-168).
11. Turn the ignition switch ON (II).
12. Reset the ECM/PCM with the HDS.
13. Clear the CKP pattern with the HDS.
14. Do the ECM/PCM idle learn procedure (see page 11-239).
15. Do the CKP pattern learn procedure (see page 11-4).
16. Start the engine, and let it idle for 10 seconds.
17. Check for Temporary DTCs or DTCs with the HDS.

    Are any Temporary DTCs or DTCs indicated?

    YES—If DTC P0339 and/or P0389 is indicated, check for poor connections or loose terminals at the CKP sensor A/B and the ECM/PCM, then go to step 1. If any other Temporary DTCs are indicated, go to the indicated DTC's troubleshooting.

    NO—Troubleshooting is complete. ■

Protected by A P

DTC P0340: CMP Sensor No Signal

1. Turn the ignition switch ON (II).
2. Clear the DTC with the HDS.
3. Start the engine.
4. Check for Temporary DTCs or DTCs with the HDS.

   Is DTC P0340 indicated?

   YES—Go to step 5.

   NO—Intermittent failure, system is OK at this time. Check for poor connections or loose terminals at the CMP sensor and the ECM/PCM. ■
5. Turn the ignition switch OFF.
6. Disconnect the CMP sensor 3P connector.
7. Turn the ignition switch ON (II).
8. Measure voltage between CMP sensor 3P connector terminal No. 3 and body ground.

CMP SENSOR 3P CONNECTOR

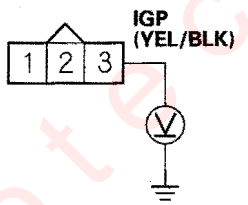

Wire side of female terminals

Is there battery voltage?

YES—Go to step 9.

NO—Repair open in the wire between the CMP sensor and PGM-FI main relay 1 (FI MAIN), then go to step 19.

9. Measure voltage between CMP sensor 3P connector terminal No. 1 and body ground.

CMP SENSOR 3P CONNECTOR

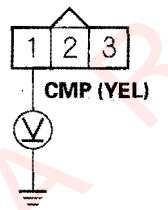

Wire side of female terminals

Is there about 5 V?

YES—Go to step 10.

NO—Go to step 11.

10. Measure voltage between CMP sensor 3P connector terminals No. 2 and No. 3.

CMP SENSOR 3P CONNECTOR

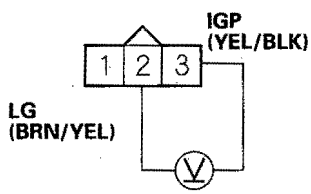

Wire side of female terminals

Is there battery voltage?

YES—Go to step 16.

NO—Repair open in the wire between the CMP sensor and G101, then go to step 19.

(cont'd)

Protected by AR

DTC Troubleshooting (cont'd)

11. Measure voltage between ECM/PCM connector terminal D7 and body ground.

ECM/PCM CONNECTOR D (17P)

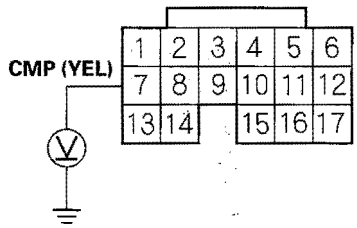

Wire side of female terminals

Is there about 5 V?

YES—Repair open in the wire between the ECM/PCM (D7) and the CMP sensor, then go to step 19.

NO—Go to step 12.

12. Turn the ignition switch OFF.
13. Jump the SCS line with the HDS.
14. Disconnect ECM/PCM connector D (17P).
15. Check for continuity between ECM/PCM connector terminal D7 and body ground.

ECM/PCM CONNECTOR D (17P)

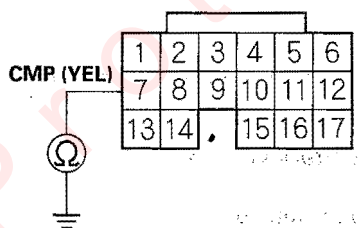

Wire side of female terminals

Is there continuity?

YES—Repair short in the wire between the ECM/PCM (D7) and the CMP sensor, then go to step 18.

NO—Go to step 25.

16. Turn the ignition switch OFF.
17. Replace the CMP sensor (see page 11-169).
18. Turn the ignition switch ON (II).
19. Reset the ECM/PCM with the HDS.
20. Clear the CKP pattern with the HDS.
21. Do the ECM/PCM idle learn procedure (see page 11-239).
22. Do the CKP pattern learn procedure (see page 11-4).
23. Start the engine.
24. Check for Temporary DTCs or DTCs with the HDS.

Are any Temporary DTCs or DTCs indicated?

YES—If DTC P0340 is indicated, check for poor connections or loose terminals at the CMP sensor and the ECM/PCM, then go to step 1. If any other Temporary DTCs or DTCs are indicated, go to the indicated DTC's troubleshooting.

NO—Troubleshooting is complete. ■

25. Update the ECM/PCM if it does not have the latest software, or substitute a known-good ECM/PCM (see page 11-6).
26. Check for Temporary DTCs or DTCs with the HDS.

Are any Temporary DTCs or DTCs indicated?

YES—If DTC P0340 is indicated, check for poor connections or loose terminals at the CMP sensor and the ECM/PCM, then go to step 1. If any other Temporary DTCs or DTCs are indicated, go to the indicated DTC's troubleshooting.

NO—If the ECM/PCM was updated, troubleshooting is complete. If the ECM/PCM was substituted, replace the original ECM/PCM (see page 11-171). ■

Protected by AP

DTC P0344: CMP Sensor Intermittent Interruption

1. Note this freeze data:

   - Engine speed
   - Vehicle speed

2. Clear the DTC with the HDS.

3. Start the engine, and let it idle for 10 seconds.

4. Check the CMP NOISE 2 count in the DATA LIST with the HDS.

   Are 0 counts indicated?

   YES—Go to step 7.

   NO—Go to step 5.

5. Test-drive the vehicle for several minutes in the range of the recorded freeze data.

6. Check the CMP NOISE 2 count in the DATA LIST with the HDS.

   Are 0 counts indicated?

   YES—Go to step 7.

   NO—Intermittent failure, system is OK at this time. Check for poor connections or loose terminals at the CMP sensor and the ECM/PCM. ■

7. Check for poor or loose connections at these connectors and terminals:

   - CMP sensor
   - ECM/PCM
   - Engine ground
   - Body ground

   Are the connections OK?

   YES—Go to step 8.

   NO—Reconnect the connectors or terminals, then go to step 11.

8. Check for damage to the CMP sensor pulse projection on the front camshaft pulley (see page 11-169).

   Is there damage?

   YES—Replace the front camshaft pulley (see page 11-169), then go to step 11.

   NO—Go to step 9.

9. Turn the ignition switch OFF.

10. Replace the CMP sensor (see page 11-169).

11. Turn the ignition switch ON (II).

12. Reset the ECM/PCM with the HDS.

13. Clear the CKP pattern with the HDS.

14. Do the ECM/PCM idle learn procedure (see page 11-239).

15. Do the CKP pattern learn procedure (see page 11-4).

16. Start the engine, and let it idle for 10 seconds.

17. Check for Temporary DTCs or DTCs with the HDS.

    Are any Temporary DTCs or DTCs indicated?

    YES—If DTC P0344 is indicated, check for poor connections or loose terminals at the CKP sensor and the ECM/PCM, then go to step 1. If any other Temporary DTCs or DTCs are indicated, go to the indicated DTC's troubleshooting.

    NO—Troubleshooting is complete. ■

Protected by AR

DTC Troubleshooting (cont'd)

DTC P0563: ECM/PCM Power Source Circuit Unexpected Voltage

1. Turn the ignition switch ON (II).
2. Clear the DTC with the HDS.
3. Turn the ignition switch OFF.
4. Wait 10 seconds.
5. Turn the ignition switch ON (II).
6. Check for Temporary DTCs or DTCs with the HDS.

   Is DTC P0563 indicated?

   YES—Go to step 7.

   NO—Intermittent failure, system is OK at this time. Check for poor connections or loose terminals at the No. 8 FI-ECU (ECM/PCM) (15A) fuse in the under-hood fuse/relay box and at the ECM/PCM. ■
7. Turn the ignition switch OFF.
8. Jump the SCS line with the HDS.
9. Disconnect ECM/PCM connector A (31P).
10. Measure voltage between ECM/PCM connector terminal A5 and body ground.

ECM/PCM CONNECTOR A (31P)

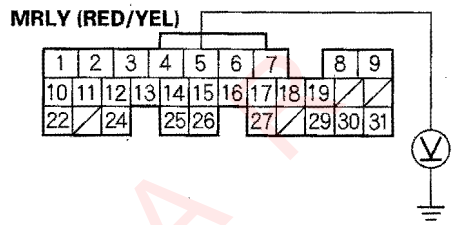

Wire side of female terminals

Is there battery voltage?

YES—Go to step 13.

NO—Go to step 11.

11. Remove the left kick panel (see page 20-62). Then remove PGM-FI main relay 1 (FI MAIN) (A) from the under-dash fuse/relay box.

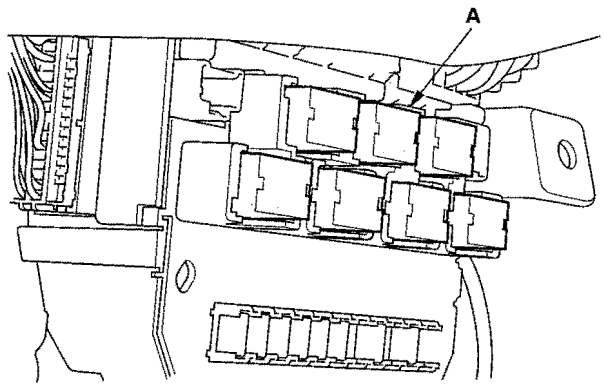

Protected by A

12. Check for continuity between ECM/PCM connector terminal A5 and body ground.

ECM/PCM CONNECTOR A (31P)

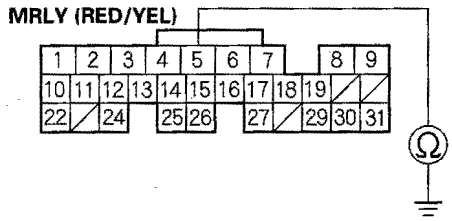

Wire side of female terminals

Is there continuity?

YES—Repair short in the wire between the ECM/PCM (A5) and PGM-FI main relay 1 (FI MAIN), then go to step 20.

NO—Go to step 19.

13. Reconnect ECM/PCM connector A (31P).

14. Measure voltage between ECM/PCM connector terminal A5 and body ground.

ECM/PCM CONNECTOR A (31P)

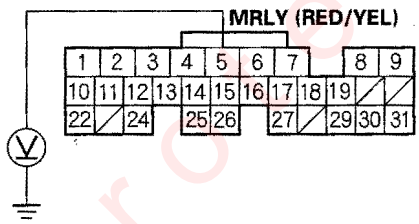

Wire side of female terminals

Is there battery voltage?

YES—Go to step 15.

NO—Go to step 26.

15. Disconnect ECM/PCM connector E (31P).

16. Measure voltage between ECM/PCM connector terminal E4 and body ground.

ECM/PCM CONNECTOR E (31P)

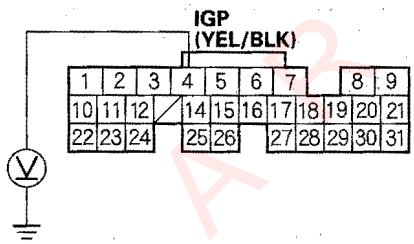

Wire side of female terminals

Is there battery voltage?

YES—Go to step 17.

NO—Go to step 26.

17. Remove the left kick panel (see page 20-62). Then remove PGM-FI main relay 1 (FI MAIN) (A) from the under-dash fuse/relay box.

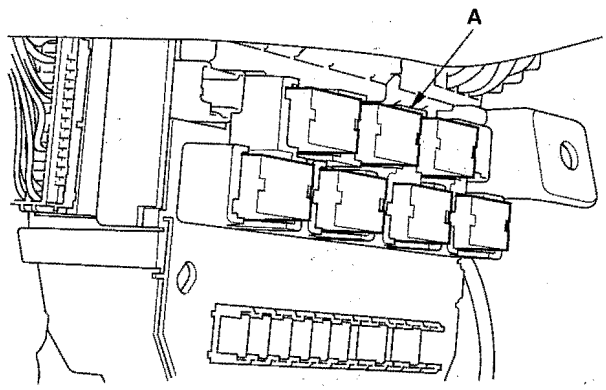

(cont'd)

Protected by A2

DTC Troubleshooting (cont'd)

18. Measure voltage between ECM/PCM connector terminal E4 and body ground.

ECM/PCM CONNECTOR E (31P)

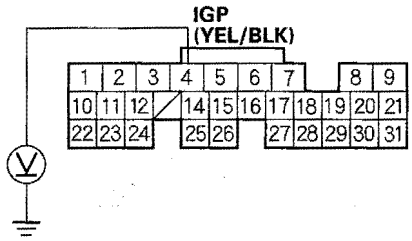

Wire side of female terminals

Is there battery voltage?

YES—Repair short to power in the wire between the ECM/PCM (E4) and PGM-FI main relay 1 (FI MAIN), then go to step 20.

NO—Go to step 19.

19. Replace PGM-FI main relay 1 (FI MAIN) (A).

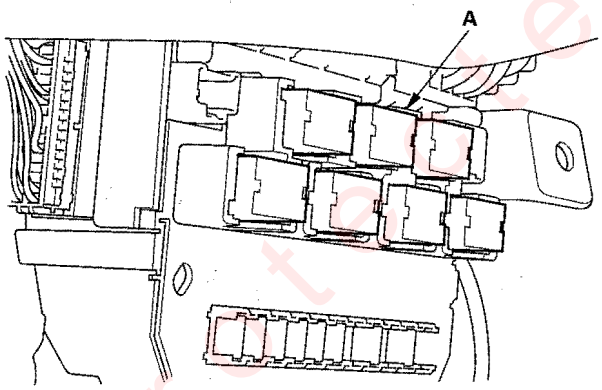

20. Turn the ignition switch ON (II).

21. Reset the ECM/PCM with the HDS.

22. Turn the ignition switch OFF.

23. Wait 10 seconds.

24. Do the ECM/PCM idle learn procedure (see page 11-239).

25. Check for Temporary DTCs or DTCs with the HDS.

Are any Temporary DTCs or DTCs indicated?

YES—If DTC P0563 is indicated, check for poor connections or loose terminals at PGM-FI main relay 1 (FI MAIN) and the ECM/PCM, then go to step 1. If any other Temporary DTCs or DTCs are indicated, go to the indicated DTC's troubleshooting.

NO—Troubleshooting is complete.■

26. Update the ECM/PCM if it does not have the latest software, or substitute a known-good ECM/PCM (see page 11-6).

27. Check for Temporary DTCs or DTCs with the HDS.

Are any Temporary DTCs or DTCs indicated?

YES—If DTC P0563 is indicated, check for poor connections or loose terminals at PGM-FI main relay 1 (FI MAIN) and the ECM/PCM, then go to step 1. If any other Temporary DTCs or DTCs are indicated, go to the indicated DTC's troubleshooting.

NO—If the ECM/PCM was updated, troubleshooting is completed. If the ECM/PCM was substituted, replace the original ECM/PCM (see page 11-171).■

Protected by R

DTC P0630: VIN Not Programmed or Mismatch

NOTE: This DTC is stored only when the ECM/PCM does not have the VIN information of the vehicle. Use the HDS to fill the missing VIN information.

1. Turn the ignition switch ON (II).
2. Clear the DTC with the HDS.
3. Turn the ignition switch OFF.
4. Turn the ignition switch ON (II), and wait for 5 seconds.
5. Check the VIN with the HDS.

   Does the HDS show the vehicle's VIN?

   YES—Go to step 8.

   NO—Go to step 6.
6. Input the VIN to the ECM/PCM with the HDS.

   Does the screen show COMPLETE?

   YES—Go to step 8.

   NO—Go to step 7.
7. Check for DTCs with the HDS.

   Is DTC P0603 indicated?

   YES—Go to the DTC P0603 troubleshooting.

   NO—Update the ECM/PCM if it does not have the latest software, or substitute a known-good ECM/PCM, then recheck (see page 11-6). If the symptom/indication goes away with a known-good ECM/PCM, replace the original ECM/PCM (see page 11-171).■
8. Clear the DTC with the HDS.
9. Turn the ignition switch OFF.
10. Turn the ignition switch ON (II), and wait for 5 seconds.
11. Check for Temporary DTCs or DTCs with the HDS.

    Are any Temporary DTCs or DTCs indicated?

    YES—If DTC P0630 is indicated, update the ECM/PCM if it does not have the latest software, or substitute a known-good ECM/PCM, then recheck. If any other Temporary DTCs or DTCs are indicated, go to the indicated DTC's troubleshooting.

    NO—Intermittent failure, system is OK at this time.■

Protected by AR

DTC Troubleshooting (cont'd)

DTC P0603: ECM/PCM Internal Control Module Keep Alive Memory (KAM) Error

1. Turn the ignition switch ON (II).
2. Clear the DTC with the HDS.
3. Check for Temporary DTCs or DTCs with the HDS.

   Is DTC P0603 indicated?

   YES—Update the ECM/PCM if it does not have the latest software, or substitute a known-good ECM/PCM, then recheck (see page 11-6). If the symptom/indication goes away with a known-good ECM/PCM, replace the original ECM/PCM (see page 11-171).■

   NO—Intermittent failure, system is OK at this time.■

DTC P0685: ECM/PCM Power Control Circuit Malfunction

1. Turn the ignition switch ON (II).
2. Clear the DTC with the HDS.
3. Check for Temporary DTCs or DTCs with the HDS.

   Is DTC P0685 indicated?

   YES—Update the ECM/PCM if it does not have the latest software, or substitute a known-good ECM/PCM, then recheck (see page 11-6). If the symptom/indication goes away with a known-good ECM/PCM, replace the original ECM/PCM (see page 11-171).■

   NO—Intermittent failure, system is OK at this time.■

Protected by AR

DTC P0715: Input Shaft (Mainshaft) Speed Sensor Circuit Malfunction (M/T)

1. Start the engine, and let it idle.
2. Check the M SHAFT SPD in the DATA LIST with the HDS.

   Is any input shaft (mainshaft) speed indicated?

   YES—Intermittent failure, system is OK at this time. Check for poor connections or loose terminals at the input shaft (mainshaft) speed sensor and the ECM. ■

   NO—Go to step 3.
3. Turn the ignition switch OFF.
4. Disconnect the input shaft (mainshaft) speed sensor 3P connector.
5. Turn the ignition switch ON (II).
6. Measure voltage between input shaft (mainshaft) speed sensor 3P connector terminal No. 1 and body ground.

INPUT SHAFT (MAINSHAFT) SPEED SENSOR 3P CONNECTOR

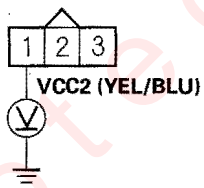

Wire side of female terminals

Is there about 5 V?

YES—Go to step 7.

NO—Repair open in the wire between the ECM (D12) and the input shaft (mainshaft) speed sensor, then go to step 16.

7. Measure voltage between input shaft (mainshaft) speed sensor 3P connector terminal No. 2 and body ground.

INPUT SHAFT (MAINSHAFT) SPEED SENSOR 3P CONNECTOR

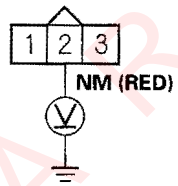

Wire side of female terminals

Is there about 5 V?

YES—Go to step 8.

NO—Go to step 9.

8. Measure voltage between input shaft (mainshaft) speed sensor 3P connector terminals No. 1 and No. 3.

INPUT SHAFT (MAINSHAFT) SPEED SENSOR 3P CONNECTOR

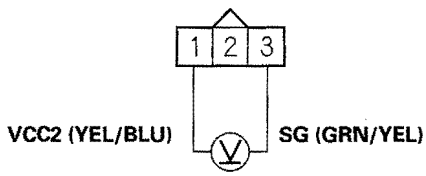

Wire side of female terminals

Is there about 5 V?

YES—Go to step 14.

NO—Repair open in the wire between the ECM (D10) and the input shaft (mainshaft) speed sensor, then go to step 16.

(cont'd)

Protected by AR

DTC Troubleshooting (cont'd)

9. Measure voltage between ECM connector terminal D8 and body ground.

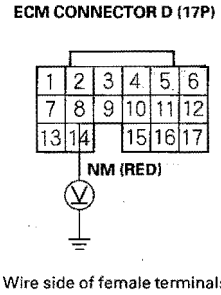

Is there about 5 V?

YES—Repair open in the wire between the ECM (D8) and the input shaft (mainshaft) speed sensor, then go to step 16.

NO—Go to step 10.

10. Turn the ignition switch OFF.
11. Jump the SCS line with the HDS.
12. Disconnect ECM connector D (17P).
13. Check for continuity between ECM connector terminal D8 and body ground.

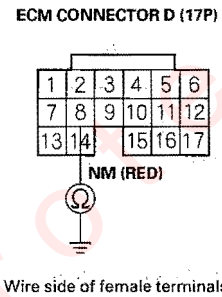

Is there continuity?

YES—Repair short in the wire between the ECM (D8) and the input shaft (mainshaft) speed sensor, then go to step 16.

NO—Go to step 21.

14. Turn the ignition switch OFF.
15. Replace the input shaft (mainshaft) speed sensor (see page 11-170).
16. Turn the ignition switch ON (II).
17. Reset the ECM with the HDS.
18. Do the ECM idle learn procedure (see page 11-239).
19. Test-drive under these conditions:
    - Engine coolant temperature more than 158°F (70°C)
    - Transmission in 3rd gear
    - Engine speed at 2,000—3,000 rpm
    - Drive for several minutes
20. Check for Temporary DTCs or DTCs with the HDS.

    Are any Temporary DTCs or DTCs indicated?

    YES—If DTC P0715 is indicated, check for poor connections or loose terminals at the input shaft (mainshaft) speed sensor and the ECM, then go to step 1. If any other Temporary DTCs or DTCs are indicated, go to the indicated DTC's troubleshooting.

    NO—Troubleshooting is complete. ■
21. Update the ECM if it does not have the latest software, or substitute a known-good ECM (see page 11-6).
22. Test-drive under these conditions:
    - Engine coolant temperature more than 158°F (70°C)
    - Transmission in 3rd gear
    - Engine speed at 2,000—3,000 rpm
    - Drive for several minutes
23. Check for Temporary DTCs or DTCs with the HDS.

    Are any Temporary DTCs or DTCs indicated?

    YES—If DTC P0715 is indicated, check for poor connections or loose terminals at the input shaft (mainshaft) speed sensor and the ECM, then go to step 1. If any other Temporary DTCs or DTCs are indicated, go to the indicated DTC's troubleshooting.

    NO—If the ECM was updated, troubleshooting is complete. If the ECM was substituted, replace the original ECM (see page 11-171). ■

Protected by AR

DTC P0720: Output Shaft (Countershaft) Speed Sensor Circuit Malfunction (M/T)

1. Start the engine. Hold the engine speed at 3,000 rpm with no load (in neutral) until the radiator fan comes on, then let it idle.
2. Test-drive the vehicle several miles.
3. Check the C SHAFT SPD in the DATA LIST with the HDS.

   Is any vehicle speed indicated?

   YES—Intermittent failure, system is OK at this time. Check for poor connections or loose terminals at the output shaft (countershaft) speed sensor and the ECM. ■

   NO—Go to step 4.
4. Turn the ignition switch OFF.
5. Disconnect the output shaft (countershaft) speed sensor 3P connector.
6. Turn the ignition switch ON (II).
7. Measure voltage between output shaft (countershaft) speed sensor 3P connector terminal No. 1 and body ground.

OUTPUT SHAFT (COUNTERSHAFT) SPEED SENSOR 3P CONNECTOR

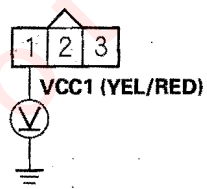

Wire side of female terminals

Is there about 5 V?

YES—Go to step 8.

NO—Repair open in the wire between the ECM (D6) and the output shaft (countershaft) speed sensor, then go to step 18.

8. Measure voltage between output shaft (countershaft) speed sensor 3P connector terminal No. 2 and body ground.

OUTPUT SHAFT (COUNTERSHAFT) SPEED SENSOR 3P CONNECTOR

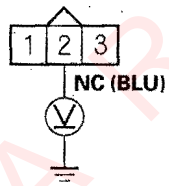

Wire side of female terminals

Is there about 5 V?

YES—Go to step 9.

NO—Go to step 10.

9. Measure voltage between output shaft (countershaft) speed sensor 3P connector terminals No. 1 and No. 3.

OUTPUT SHAFT (COUNTERSHAFT) SPEED SENSOR 3P CONNECTOR

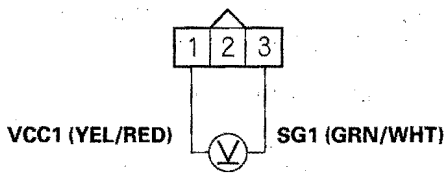

Wire side of female terminals

Is there about 5 V?

YES—Go to step 15.

NO—Repair open in the wire between the ECM (D4) and the output shaft (countershaft) speed sensor, then go to step 18.

(cont'd)

Protected by AR

DTC Troubleshooting (cont'd)

10. Measure voltage between ECM connector terminal D14 and body ground.

ECM CONNECTOR D (17P)

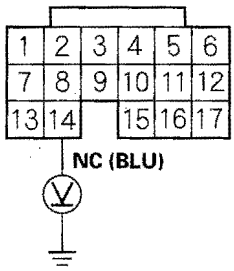

Wire side of female terminals

Is there about 5 V?

YES—Repair open in the wire between the ECM (D14) and the output shaft (countershaft) speed sensor, then go to step 18.

NO—Go to step 11.

11. Turn the ignition switch OFF.

12. Jump the SCS line with the HDS.

13. Disconnect ECM connector D (17P).

14. Check for continuity between ECM connector terminal D14 and body ground.

ECM CONNECTOR D (17P)

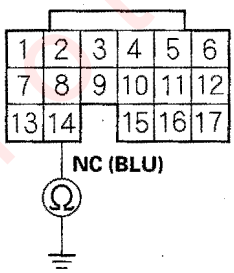

Wire side of female terminals

Is there continuity?

YES—Repair short in the wire between the ECM (D14) and the output shaft (countershaft) speed sensor, then go to step 17.

NO—Go to step 23.

15. Turn the ignition switch OFF.

16. Replace the output shaft (countershaft) speed sensor (see page 11-170).

17. Turn the ignition switch ON (II).

18. Reset the ECM with the HDS.

19. Do the ECM idle learn procedure (see page 11-239).

20. Test-drive under these conditions:

- Engine coolant temperature more than 158°F (70°C)
- Transmission in 5th gear
- Engine speed at 2,000—3,000 rpm
- Drive for several minutes, then decelerate (with the throttle fully closed) for 8 seconds

21. Check for Temporary DTCs or DTCs with the HDS.

Are any Temporary DTCs or DTCs indicated?

YES—If DTC P0720 is indicated, check for poor connections or loose terminals at the output shaft (countershaft) speed sensor and the ECM, then go to step 1. If any other Temporary DTCs or DTCs are indicated, go to the indicated DTC's troubleshooting.

NO—Go to step 22.

22. Monitor the OBD STATUS for DTC P0720 in the DTCs MENU with the HDS.

Does the screen indicate PASSED?

YES—Troubleshooting is complete.■

NO—If the screen indicates FAILED, go to step 1 and recheck. If the screen indicates NOT COMPLETED, go to step 19 and recheck.

Protected by AR

23. Update the ECM if it does not have the latest software, or substitute a known-good ECM (see page 11-6).

24. Test-drive under these conditions:

    - Engine coolant temperature more than 158°F (70°C)
    - Transmission in 5th gear
    - Engine speed at 2,000—3,000 rpm
    - Drive for several minutes, then decelerate (with the throttle fully closed) for 8 seconds

25. Check for Temporary DTCs or DTCs with the HDS.

    Are any Temporary DTCs or DTCs indicated?

    YES—If DTC P0720 is indicated, check for poor connections or loose terminals at the output shaft (countershaft) speed sensor and the ECM, then go to step 1. If any other Temporary DTCs or DTCs are indicated, go to the indicated DTC's troubleshooting.

    NO—If the ECM was updated, troubleshooting is complete. If the ECM was substituted, replace the original ECM (see page 11-171). ■

Protected by AR

DTC Troubleshooting (cont'd)

DTC P1297: ELD Circuit Low Voltage

1. Turn the ignition switch ON (II).
2. Check the ELD in the DATA LIST with the HDS.

   Is 72 A or more indicated?

   YES—Go to step 3.

   NO—Intermittent failure, system is OK at this time. Check for poor connections or loose terminals at the ELD and the ECM/PCM. ■
3. Turn the ignition switch OFF.
4. Disconnect the ELD 3P connector.
5. Turn the ignition switch ON (II).
6. Check the ELD in the DATA LIST with the HDS.

   Is 72 A or more indicated?

   YES—Go to step 7.

   NO—Go to step 11.
7. Turn the ignition switch OFF.
8. Jump the SCS line with the HDS.
9. Disconnect ECM/PCM connector A (31P).
10. Check for continuity between ECM/PCM connector terminal A18 and body ground.

ECM/PCM CONNECTOR A (31P)

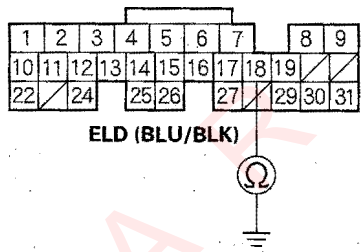

Wire side of female terminals

Is there continuity?

YES—Repair short in the wire between the ECM/PCM (A18) and the ELD, then go to step 13.

NO—Go to step 19.

11. Turn the ignition switch OFF.
12. Replace the under-hood fuse/relay box (see page 22-64).
13. Turn the ignition switch ON (II).
14. Reset the ECM/PCM with the HDS.
15. Do the ECM/PCM idle learn procedure (see page 11-239).
16. Start the engine.
17. Turn on the headlights.

Protected by AK

18. Check for Temporary DTCs or DTCs with the HDS.

    Are any Temporary DTCs or DTCs indicated?

    YES—If DTC P1297 is indicated, check for poor connections or loose terminals at the ELD and the ECM/PCM, then go to step 1. If any other Temporary DTCs or DTCs are indicated, go to the indicated DTC's troubleshooting.

    NO—Troubleshooting is complete. ■

19. Update the ECM/PCM if it does not have the latest software, or substitute a known-good ECM/PCM (see page 11-6).

20. Start the engine.

21. Turn on the headlights.

22. Check for Temporary DTCs or DTCs with the HDS.

    Are any Temporary DTCs or DTCs indicated?

    YES—If DTC P1297 is indicated, check for poor connections or loose terminals at the ELD and the ECM/PCM, then go to step 1. If any other Temporary DTCs or DTCs are indicated, go to the indicated DTC's troubleshooting.

    NO—If the ECM/PCM was updated, troubleshooting is complete. If the ECM/PCM was substituted, replace the original ECM/PCM (see page 11-171). ■

Protected by AR

DTC Troubleshooting (cont'd)

DTC P1298: ELD Circuit High Voltage

1. Start the engine, and let it idle.
2. Check the ELD in the DATA LIST with the HDS.

   Is 0.2 A or less indicated?

   YES—Go to step 3.

   NO—Intermittent failure, system is OK at this time. Check for poor connections or loose terminals at the ELD and the ECM/PCM. ■
3. Turn the ignition switch OFF.
4. Disconnect the ELD 3P connector.
5. Turn the ignition switch ON (II).
6. Measure voltage between ELD 3P connector terminal No. 1 and body ground.

ELD 3P CONNECTOR

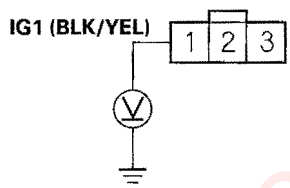

Wire side of female terminals

Is there battery voltage?

YES—Go to step 7.

NO—Repair open in the wire between the No. 18 ACG (15A) fuse and the ELD, then go to step 14.

7. Turn the ignition switch OFF.
8. Connect ELD 3P connector terminal No. 3 to body ground with a jumper wire.

ELD 3P CONNECTOR

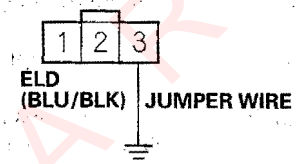

Wire side of female terminals

9. Jump the SCS line with the HDS.
10. Disconnect ECM/PCM connector A (31P).
11. Check for continuity between ECM/PCM connector terminal A18 and body ground.

ECM/PCM CONNECTOR A (31P)

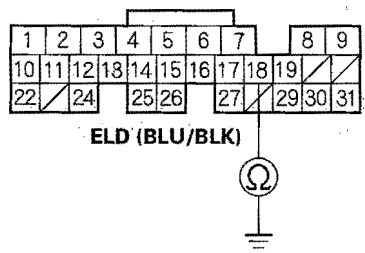

Wire side of female terminals

Is there continuity?

YES—Go to step 12.

NO—Repair open in the wire between the ECM/PCM (A18) and the ELD, then go to step 14.

Protected by AR

12. Check for continuity between ELD 3P connector terminal No. 2 and body ground.

ELD 3P CONNECTOR

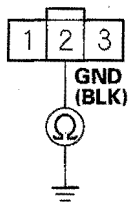

Wire side of female terminals

Is there continuity?

YES—Go to step 13.

NO—Repair open in the wire between the ELD and G302, then go to step 14.

13. Replace the under-hood fuse/relay box (see page 22-64).

14. Turn the ignition switch ON (II).

15. Reset the ECM/PCM with the HDS.

16. Do the ECM/PCM idle learn procedure (see page 11-239).

17. Check for Temporary DTCs or DTCs with the HDS.

Are any Temporary DTCs or DTCs indicated?

YES—Go to step 18.

NO—Troubleshooting is complete. ■

18. Update the ECM/PCM if it does not have the latest software, or substitute a known-good ECM/PCM (see page 11-6).

19. Check for Temporary DTCs or DTCs with the HDS.

Are any Temporary DTCs or DTCs indicated?

YES—If DTC P1298 is indicated, check for poor connections or loose terminals at the ELD and the ECM/PCM, then go to step 1. If any other Temporary DTCs or DTCs are indicated, go to the indicated DTC's troubleshooting.

NO—If the ECM/PCM was updated, troubleshooting is complete. If the ECM/PCM was substituted, replace the original ECM/PCM (see page 11-171). ■

Protected by AIS

DTC Troubleshooting (cont'd)

DTC P2227: BARO Sensor Range/ Performance Problem

NOTE: If DTC P0107, P0108, P1128, and/or P1129 are stored at the same time as DTC P2227, troubleshoot those DTCs first, then recheck for DTC P2227.

1. Turn the ignition switch ON (II), and wait 2 seconds.
2. Check the BARO SENSOR in the DATA LIST with the HDS.

   Is about 101 kPa (760 mmHg, 29.9 in.Hg), or about 2.9 V at sea level indicated?

   YES – Go to step 3.

   NO – Update the ECM/PCM if it does not have the latest software, or substitute a known-good ECM/PCM, then recheck (see page 11-6). If the symtom/ indication goes away with a known-good ECM/PCM, replace the original ECM/PCM (see page 11-171). ■
3. Clear the DTC with the HDS.
4. Start the engine. Hold the engine speed at 3,000 rpm with no load (in Park or neutral) until the radiator fan comes on, then let it idle.
5. Test-drive under these conditions:
   - Engine coolant temperature more than 158°F (70°C)
   - A/T in D position (M/T in 4th gear)
   - Throttle position between 14 degrees and 45 degrees for 2 seconds
6. Monitor the OBD STATUS for DTC P2227 in the DTCs MENU with the HDS.

   Does the screen indicate FAILED?

   YES – Go to step 7.

   NO – If the screen indicates PASSED, intermittent failure, system is OK at this time. If the screen indicates NOT COMPLETED, go to step 4 and recheck.
7. Update the ECM/PCM if it does not have the latest software, or substitute a known-good ECM/PCM (see page 11-6).
8. Reset the ECM/PCM with the HDS.
9. Do the ECM/PCM idle learn procedure (see page 11-239).
10. Check for Temporary DTCs or DTCs with the HDS.

    Are any Temporary DTCs or DTCs indicated?

    YES – If DTC P2227 is indicated, check for poor connections or loose terminals at the ECM/PCM, then go to step 1. If any other Temporary DTCs or DTCs are indicated, go to the indicated DTC's troubleshooting.

    NO – If the ECM/PCM was updated, troubleshooting is complete. If the ECM/PCM was substituted, replace the original ECM/PCM (see page 11-171). ■

Protected by ...

DTC P2228: BARO Sensor Circuit Low Voltage

1. Turn the ignition switch ON (II).
2. Check the BARO SENSOR in the DATA LIST with the HDS.

   Is about 53 kPa (397 mmHg,15.6 in.Hg), 1.58 V, or less indicated?

   YES—Go to step 3.

   NO—Intermittent failure, system is OK at this time.■
3. Update the ECM/PCM if it does not have the latest software, or substitute a known-good ECM/PCM (see page 11-6).
4. Check for Temporary DTCs or DTCs with the HDS.

   Are any Temporary DTCs or DTCs indicated?

   YES—If DTC P2228 is indicated, check for poor connections or loose terminals at the ECM/PCM, then go to step 1. If any other Temporary DTCs or DTCs are indicated, go to the indicated DTC's troubleshooting.

   NO—If the ECM/PCM was updated, troubleshooting is complete. If the ECM/PCM was substituted, replace the original ECM/PCM (see page 11-171).■

DTC P2229: BARO Sensor Circuit High Voltage

1. Turn the ignition switch ON (II).
2. Check the BARO SENSOR in the DATA LIST with the HDS.

   Is about 160 kPa (1,200 mmHg, 47.2 in.Hg), 4.5 V, or higher indicated?

   YES—Go to step 3.

   NO—Intermittent failure, system is OK at this time.■
3. Update the ECM/PCM if it does not have the latest software, or substitute a known-good ECM/PCM (see page 11-6).
4. Check for Temporary DTCs or DTCs with the HDS.

   Are any Temporary DTCs or DTCs indicated?

   YES—If DTC P2229 is indicated, check for poor connections or loose terminals at the ECM/PCM, then go to step 1. If any other Temporary DTCs or DTCs are indicated, go to the indicated DTC's troubleshooting.

   NO—If the ECM/PCM was updated, troubleshooting is complete. If the ECM/PCM was substituted, replace the original ECM/PCM (see page 11-171).■

Protected by A P

DTC Troubleshooting (cont'd)

DTC U0073: F-CAN Malfunction (Bus-Off)

DTC U0155: F-CAN Malfunction (Gauge Control Module-ECM/PCM)

1. Turn the ignition switch ON (II).
2. Clear the DTC with the HDS.
3. Check for Temporary DTCs or DTCs with the HDS.

   Is DTC U0073 and/or U0155 indicated?

   YES—Go to step 4.

   NO—Intermittent failure, system is OK at this time. Check for poor connections or loose terminals at the gauge control module, VSA control unit, the navigation unit, and the ECM/PCM. ■
4. Check for DTCs in the DTCs MENU in the Body Electrical system DTCs menu with the HDS.

   Is DTC B1168, B1169, and/or B1178 indicated?

   YES—Go to step 5.

   NO—Do the gauge self-diagnostic function (see page 22-26). ■
5. Turn the ignition switch OFF.
6. Remove the gauge control module (see page 22-265).
7. Disconnect the gauge module 30P connector.
8. Disconnect the VSA control unit 47P connector.
9. If equipped with navigation system, disconnect the navigation unit 20P connector.
10. Jump the SCS line with the HDS.
11. Disconnect ECM/PCM connector A (31P).
12. Check for continuity between ECM/PCM connector terminals A15, A26, and body ground individually.

ECM/PCM CONNECTOR A (31P)

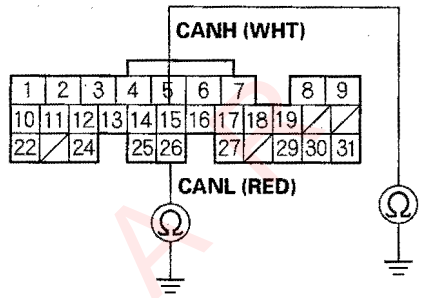

Wire side of female terminals

Is there continuity?

YES—Repair short in the wire between the gauge control module, VSA control unit, the navigation unit, and the ECM/PCM (A15 (A26)), then go to step 17.

NO—Go to step 13.

13. Check for continuity between ECM/PCM connector terminals A15 and A26.

ECM/PCM CONNECTOR A (31P)

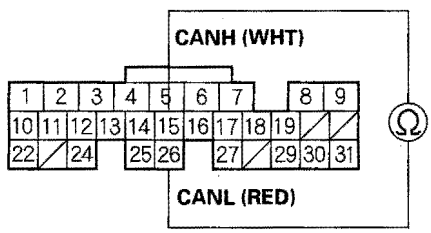

Wire side of female terminals

Is there continuity?

YES—Repair short in the wire between the ECM/PCM A15 (CANH line) and A26 (CANL line), then go to step 17.

NO—Go to step 14.

Protected by AC

14. Check for continuity between ECM/PCM connector terminal A15 and the following connector terminals:

Connector	Terminal
Gauge control module 30P	No. 13 (WHT)
VSA control unit 47P	No. 14 (WHT)
Navigation unit 20P	No. 8 (WHT)

Is there continuity between the ECM/PCM terminal and each of the terminals in the chart?

YES—Go to step 15.

NO—Repair open in the wire between the ECM/PCM and the appropriate connector, then go to step 17.

15. Check for continuity between ECM/PCM connector terminal A26 and the following connector terminals:

Connector	Terminal
Gauge control module 30P	No. 14 (RED)
VSA control unit 47P	No. 30 (RED)
Navigation unit 20P	No.18 (RED)

Is there continuity between the ECM/PCM terminal and each of the terminals in the chart?

YES—Go to step 16.

NO—Repair open in the wire between the ECM/PCM and the appropriate connector, then go to step 17.

16. Refer to the following chart. Select the row that most closely represents the combination of DTCs retrieved from the PGM-FI, VSA, and Body Electrical systems: Check connections at the control module indicated in the last column. If all the connections are OK, substitute another control module. After substituting the control module, go to step 17 and recheck.

PGM-FI	VSA	Body Electrical	Control module
U0155	86-1	B1168 B1169 B1178	Gauge Control Module
U0073 U0121 U0155	68-1 86-1	B1168 B1169 B1178	ECM/PCM
U0073 U0121 U0155	68-1 86-1	B1168 B1178	VSA control unit

Are the DTCs still indicated?

YES—Substitute the remaining control modules, one at time, until the DTCs are no longer present, then replace the control module that made the DTCs go away. After replacing the faulty control module, go to step 17.

NO—Replace the faulty control module, then go to step 17.

17. Reconnect all the connectors.

18. Turn the ignition switch ON (II).

19. Reset the ECM/PCM with the HDS.

20. Do the ECM/PCM idle learn procedure (see page 11-239).

21. Check for Temporary DTCs or DTCs with the HDS.

Are any Temporary DTCs or DTCs indicated?

YES—If DTC U0073 and/or U0155 is indicated, check for poor connections or loose terminals at the gauge assembly, VSA control unit, navigation unit, and the ECM/PCM, then go to step 1. If any other DTCs are indicated, go to the indicated DTC's troubleshooting.

NO—Troubleshooting is complete.■

Protected by AR

DTC Troubleshooting (cont'd)

DTC U0122: F-CAN Malfunction (VSA-ECM/PCM)

NOTE: If DTC U0073 is stored at the same time as DTC U0122, troubleshoot DTC U0073 first, then recheck for DTC U0122.

1. Turn the ignition switch ON (II).
2. Clear the DTC with the HDS.
3. Check for Temporary DTCs or DTCs with the HDS.

   Is DTC U0122 indicated?

   YES—Go to step 4.

   NO—Intermittent failure, system is OK at this time. Check for poor connections or loose terminals at the gauge assembly, the VSA control unit, and the ECM/PCM. ■
4. Check for a DTC in the VSA DTCs MENU with the HDS.

   Is VSA DTC 86 indicated?

   YES—Go to step 5.

   NO—Go to step 9.
5. Turn the ignition switch OFF.
6. Disconnect the VSA control unit 47P connector.
7. Check for continuity between VSA control unit 47P connector terminals No. 14 and No. 30.

VSA CONTROL UNIT 47P CONNECTOR

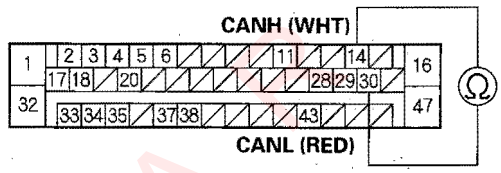

Wire side of female terminals

Is there continuity?

YES—Go to step 8.

NO—Repair open in the wire between the VSA control unit (No. 14 (No. 30)) and the ECM/PCM (A15 (A26)), then go to step 14.

8. Check for a poor connection at the cabin wire harness/dashboard wire harness 20P connector.

   Is the connection OK?

   YES—Substitute a known-good VSA control unit, then go to step 14 and recheck. If no DTCs are indicated, replace the original VSA control unit, then go to step 14.

   NO—Repair the poor connection at the cabin wire harness/dashboard wire harness 20P connector, then go to step 14.

Protected by A

9. Turn the ignition switch OFF.
10. Disconnect the VSA control unit 47P connector.
11. Turn the ignition switch ON (II).
12. Measure voltage between VSA control unit 47P connector terminal No. 38 and body ground.

VSA CONTROL UNIT 47P CONNECTOR

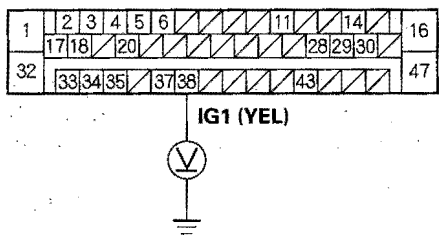

Wire side of female terminals

Is there battery voltage?

YES—Go to step 13.

NO—Check the No. 21 IG METER (7.5A) fuse in the under-dash fuse/relay box. If the fuse is OK, repair open in the wire between the No. 21 IG METER (7.5A) fuse and the VSA control unit, then go to step 14.

13. Check for continuity between VSA control unit 47P connector terminal No. 32 and body ground.

VSA CONTROL UNIT 47P CONNECTOR

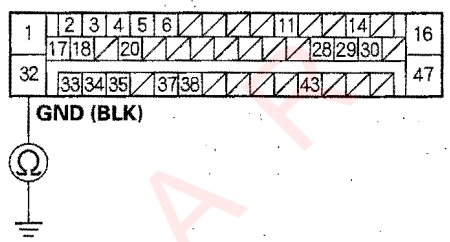

Wire side of female terminals

Is there continuity?

YES—Substitute a known-good VSA control unit, then go to step 14 and recheck. If no DTCs are indicated, replace the original VSA control unit, then go to step 14.

NO—Repair open in the wire between the VSA control unit and G203, then go to step 14.

14. Turn the ignition switch ON (II).
15. Reset the ECM/PCM with the HDS.
16. Do the ECM/PCM idle learn procedure (see page 11-239).
17. Check for Temporary DTCs or DTCs with the HDS.

Are any Temporary DTCs or DTCs indicated?

YES—If DTC U0122 is indicated, check for poor connections or loose terminals at the gauge assembly, the VSA control unit, and the ECM/PCM, then go to step 1. If any other Temporary DTCs or DTCs are indicated, go to the indicated DTC's troubleshooting.

NO—Troubleshooting is complete.■

Protected by A P

MIL Circuit Troubleshooting

1. Turn the ignition switch ON (II).
2. Do the gauge self-diagnostic function (see page 22-262).

   Does the MIL indicator flash?

   YES – Go to step 3.

   NO – Substitute a known-good gauge control module, and recheck. If the MIL circuit is OK, replace the original gauge control module. ■
3. Turn the ignition switch OFF.
4. Turn the ignition switch ON (II), and watch the MIL.

   Does the MIL stay off?

   YES – Go to step 17.

   NO – Go to step 5.
5. Turn the ignition switch OFF.
6. Turn the ignition switch ON (II), wait 20 seconds, and watch the MIL.

   Does the MIL stay on or flash more than 5 times?

   YES – Go to step 7.

   NO – The MIL circuit is OK. ■
7. Turn the ignition switch OFF.
8. Connect the HDS (see page 11-3).
9. Turn the ignition switch ON (II), and read the HDS.

   Does the HDS communicate with the ECM/PCM?

   YES – Go to step 10.

   NO – Go to "DLC Circuit Troubleshooting" (see page 11-160). If no problem is found in the DLC troubleshooting, go to step 21.
10. Check for Temporary DTCs or DTCs with the HDS.

    Are any Temporary DTCs or DTCs indicated?

    YES – Go to the indicated DTC's troubleshooting.

    NO – Go to step 11.
11. Check the MIL in the DATA LIST with the HDS.

    Does it indicate ON?

    YES – Go to step 12.

    NO – Substitute a known-good gauge control module, and recheck. If the MIL circuit is OK, replace the original gauge control module. ■
12. Check the SCS in the DATA LIST with the HDS.

    Is a short indicated?

    YES – Go to step 13.

    NO – Update the ECM/PCM if it does not have the latest software, or substitute a known-good ECM/PCM, then recheck (see page 11-6). If the symptom/indication goes away with a known-good ECM/PCM, replace the original ECM/PCM (see page 11-171). ■
13. Turn the ignition switch OFF.
14. Jump the SCS line with the HDS.
15. Disconnect ECM connector A (31P).

Protected by A R

16. Check for continuity between ECM/PCM connector terminal A16 and body ground.

ECM/PCM CONNECTOR A (31P)

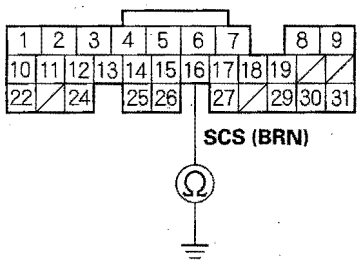

Wire side of female terminals

Is there continuity?

YES—Repair short in the wire between the ECM/PCM (A16) and the DLC.■

NO—Update the ECM/PCM if it does not have the latest software, or substitute a known-good ECM/PCM, then recheck (see page 11-6). If the symptom/indication goes away with a known-good ECM/PCM, replace the original ECM/PCM (see page 11-171).■

17. Try to start the engine.

Does the engine start and idle smoothly?

YES—Go to step 18.

NO—Go to step 22.

18. Turn the ignition switch OFF.

19. Connect the HDS (see page 11-3).

20. Turn the ignition switch ON (II), and read the HDS.

Does the HDS communicate with the ECM/PCM?

YES—Go to step 22.

NO—Go to "DLC Circuit Troubleshooting" (see page 11-160). If no problem is found in the DLC troubleshooting, go to step 21.

21. Check for Temporary DTCs or DTCs with the HDS.

Is DTC U0073 and/or U0155 indicated?

YES—Go to the indicated DTC troubleshooting.■

NO—Update the ECM/PCM if it does not have the latest software, or substitute a known-good ECM/PCM, then recheck (see page 11-6). If the symptom/indication goes away with a known-good ECM/PCM, replace the original ECM/PCM (see page 11-171).■

22. Turn the ignition swtich OFF.

23. Inspect the No. 23 +B IG MAIN (50A) fuse in the under-hood fuse/relay box.

Is the fuse OK?

YES—Repair open in the wire between the No. 23 +B IG MAIN (50A) fuse and the ignition switch. If the wire is OK, go to step 24.

NO—Repair short in the wire between No. 23 +B IG MAIN (50A) fuse and the under-dash fuse/relay box. Also replace the No. 23 +B IG MAIN (50A) fuse.■

(cont'd)

Protected by AP

MIL Circuit Troubleshooting (cont'd)

24. Inspect the No. 8 FI ECU (ECM/PCM) (15A) fuse in the under-hood fuse/relay box.

    Is the fuse OK?

    YES—Go to step 31.

    NO—Go to step 25.

25. Remove the blown No. 8 FI ECU (ECM/PCM) (15A) fuse from the under-dash fuse/relay box.

26. Remove the left kick panel (see page 20-62), then remove the PGM-FI main relay 1 (FI MAIN) (A) from the under-hood fuse/relay box.

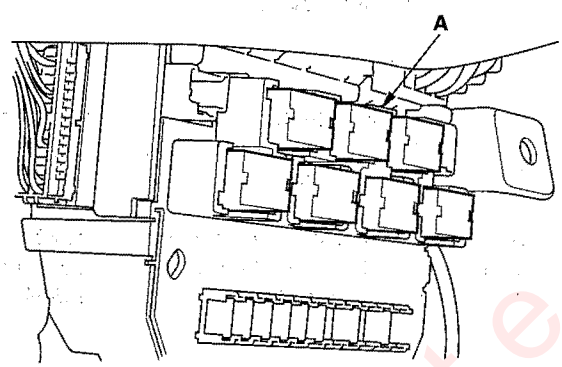

27. Check for continuity between body ground and PGM-FI main relay 1 (FI MAIN) 4P connector terminals No. 2 and No. 3 individually.

PGM-FI MAIN RELAY 1 (FI MAIN) 4P CONNECTOR

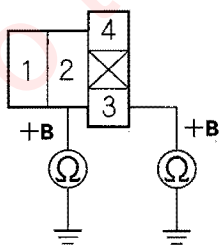

Terminal side of female terminals

Is there continuity?

YES—Repair short in the wire between the No. 8 FI ECU (PCM) (15A) and PGM-FI main relay 1 (FI MAIN). Also replace the No. 8 FI ECU (ECM/PCM) (15A) fuse.■

NO—Go to step 28.

28. Disconnect each of the components or connectors below, one at a time, and check for continuity between PGM-FI main relay 1 (FI MAIN) 4P connector terminal No. 1 and body ground.

    - PGM-FI main relay 2 (FUEL PUMP)
    - ECM/PCM connector E (31P)
    - Each injector 2P connector
    - Camshaft position (CMP) sensor 3P connector
    - Crankshaft position (CKP) sensor A/B 6P connector

PGM-FI MAIN RELAY 1 (FI MAIN) 4P CONNECTOR

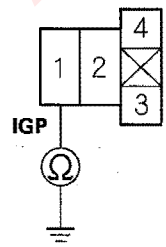

Terminal side of female terminals

Is there continuity?

YES—Go to step 29.

NO—Replace the component that made the short to body ground go away when disconnected. If the item is the ECM/PCM, update the ECM/PCM if it does not have the latest software, or substitute a known-good ECM/PCM, then recheck (see page 11-6). If the symptom/indication goes away with a known-good ECM/PCM, replace the original ECM/PCM (see page 11-171). Also replace the No. 8 FI ECU (ECM/PCM) (15A) fuse.■

29. Disconnect the connectors of all these components.

    - PGM-FI main relay 2 (FUEL PUMP)
    - ECM/PCM connector E (31P)
    - Injectors
    - Camshaft position (CMP) sensor
    - Crankshaft position (CKP) sensor A/B

Presented by AP

30. Check for continuity between PGM-FI main relay 1 (FI MAIN) 4P connector terminal No. 1 and body ground.

PGM-FI MAIN RELAY 1 (FI MAIN) 4P CONNECTOR

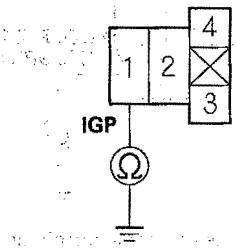

Terminal side of female terminals

Is there continuity?

YES—Repair short in the wire between the PGM-FI main relay (FI MAIN) and each item. Also replace the No. 8 FI ECU (ECM/PCM) (15A) fuse.■

NO—Replace the PGM-FI main relay (FI MAIN). Also replace the No. 8 FI ECU (ECM/PCM) (15A) fuse.■

31. Inspect the No. 19 FUEL PUMP (15A) fuse in the under-dash fuse/relay box.

Is the fuse OK?

YES—Go to step 44.

NO—Go to step 32.

32. Remove the blown No. 19 IG FUEL PUMP (15A) fuse in the under-dash fuse/relay box.

33. Jump the SCS line with the HDS.

34. Disconnect ECM/PCM connector E (31P).

35. Check for continuity between ECM/PCM connector terminal E5 and body ground.

ECM/PCM CONNECTOR E (31P)

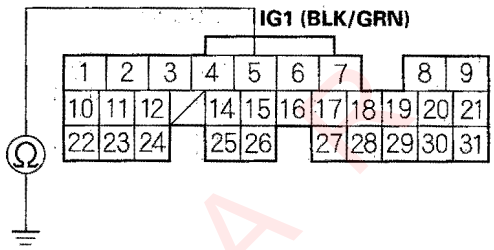

Wire side of female terminals

Is there continuity?

YES—Go to step 36.

NO—Replace the No. 19 IG FUEL PUMP (15A) fuse, and update the ECM/PCM if it does not have the latest software, or substitute a known-good ECM/PCM, then recheck (see page 11-6). If the symptom/indication goes away with a known-good ECM/PCM, replace the original ECM/PCM (see page 11-171).■

36. Remove the kick panel (see page 20-62). Then remove PGM-FI main relay 2 (FUEL PUMP) (A) from the under-hood fuse/relay box.

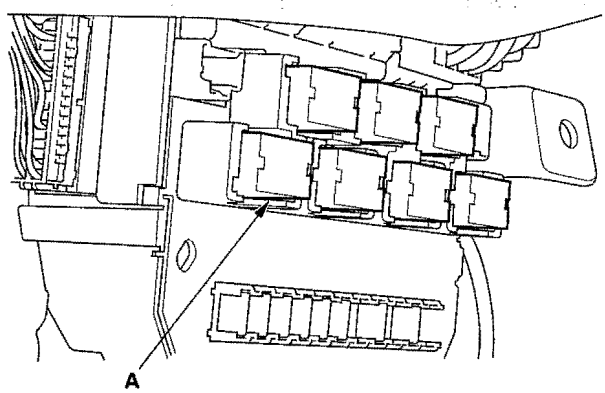

(cont'd)

Protected by A

MIL Circuit Troubleshooting (cont'd)

37. Check for continuity between ECM/PCM connector terminal E5 and body ground.

ECM/PCM CONNECTOR E (31P)

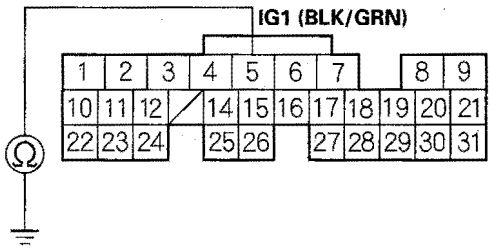

Wire side of female terminals

Is there continuity?

YES – Repair short in the wire between the No. 19 IG FUEL PUMP (15A) fuse and the ECM/PCM (E5), or between the No. 19 FUEL PUMP (15A) fuse and PGM-FI main relay 2 (FUEL PUMP). Also replace the No. 19 IG FUEL PUMP (15A) fuse. ■

NO – Go to step 38.

38. Remove the trunk floor trim panel.

39. Remove the access panel from the floor.

40. Disconnect the fuel pump 5P connector.

41. Check for continuity between fuel pump 5P connector terminal No. 5 and body ground.

FUEL PUMP 5P CONNECTOR

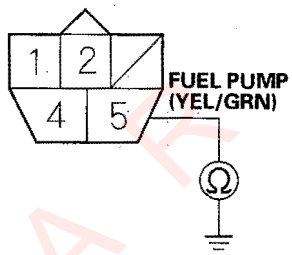

Wire side of female terminals

Is there continuity?

YES – Repair short in the wire between the fuel pump and PGM-FI main relay 2 (FUEL PUMP). Also replace the No. 19 IG FUEL PUMP (15A) fuse. ■

NO – Go to step 42.

42. Reinstall PGM-FI main relay 2 (FUEL PUMP) (A).

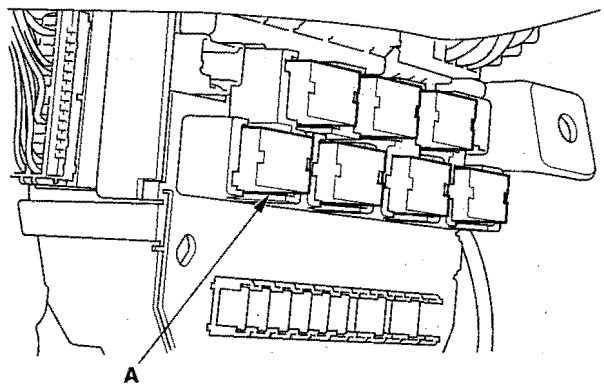

Protected by AR

43. Check for continuity between fuel pump 5P connector terminal No. 5 and body ground.

FUEL PUMP 5P CONNECTOR

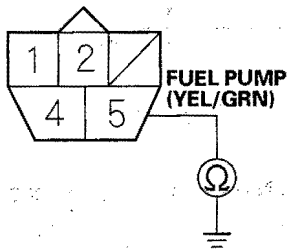

Wire side of female terminals

Is there continuity?

YES—Replace PGM-FI main relay 2 (FUEL PUMP). Also replace the No. 19 IG FUEL PUMP (15A) fuse.■

NO—Check the fuel pump, and replace it if necessary (see page 11-257). Also replace the No. 19 IG FUEL PUMP (15A) fuse.■

44. Jump the SCS line with the HDS.

45. Disconnect ECM/PCM connector E (31P).

46. Turn the ignition switch ON (II).

47. Measure voltage between ECM/PCM connector terminal E5 and body ground.

ECM/PCM CONNECTOR E (31P)

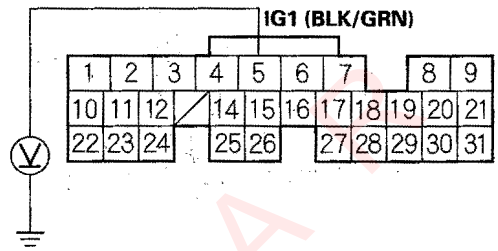

Wire side of female terminals

Is there battery voltage?

YES—Go to step 48.

NO—Repair open in the wire between the No. 19 IG FUEL PUMP (15A) fuse and the ECM/PCM (E5).■

48. Measure voltage between ECM/PCM connector terminal A5 and body ground.

ECM/PCM CONNECTOR A (31P)

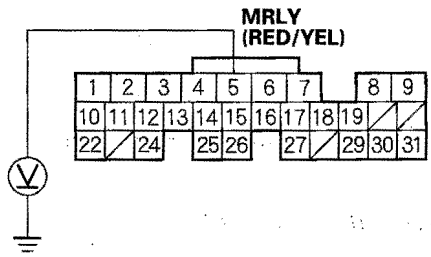

Wire side of female terminals

Is there battery voltage?

YES—Go to step 53.

NO—Go to step 49.

49. Turn the ignition switch OFF.

(cont'd)

Protected by A

MIL Circuit Troubleshooting (cont'd)

50. Remove the kick panel (see page 20-62). Then remove PGM-FI main relay 1 (FI MAIN) (A) from the under-hood fuse/relay box.

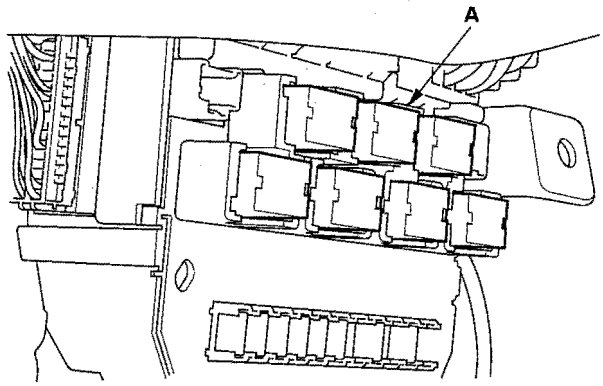

51. Measure voltage between PGM-FI main relay 1 (FI MAIN) 4P connector terminal No. 3 and body ground.

PGM-FI MAIN RELAY 2 (FUEL PUMP) 4P CONNECTOR

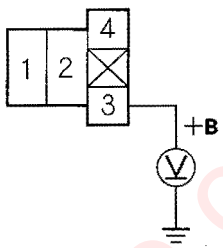

Terminal side of female terminals

Is there battery voltage?

YES—Go to step 52.

NO—Repair open in the wire between the No. 8 FI ECU (ECM/PCM) (15A) fuse and PGM-FI main relay 1.■

52. Check for continuity between PGM-FI main relay 1 (FI MAIN) 4P connector terminal No. 4 and ECM/PCM connector terminal A5.

PGM-FI MAIN RELAY 1 (FI MAIN) 4P CONNECTOR

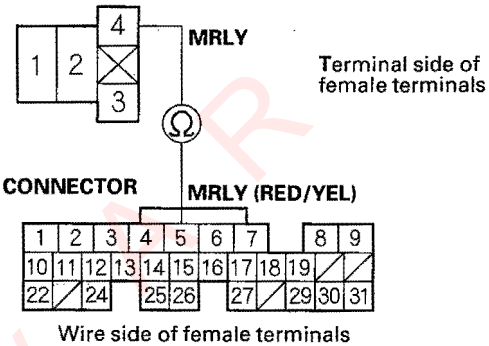

Is there continuity?

YES—Test PGM-FI main relay 1 (FI MAIN) (see page 22-75). If the relay is OK, update the ECM/PCM if it does not have the latest software, or substitute a known-good ECM/PCM, then recheck (see page 11-6). If the symptom/indication goes away with a known-good ECM/PCM, replace the original ECM/PCM (see page 11-171).■

NO—Repair open in the wire between PGM-FI main relay 1 (FI MAIN) and the ECM/PCM (A5).■

53. Reconnect ECM/PCM connector E (31P).

54. Turn the ignition switch ON (II).

Protected by MR

55. Measure voltage between body ground and ECM/PCM connector terminals E4.

ECM/PCM CONNECTOR E (31P)

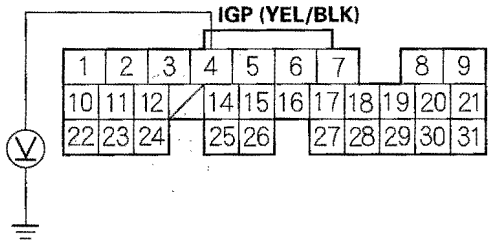

Wire side of female terminals

Is there battery voltage?

YES – Go to step 62.

NO – Go to step 56.

56. Turn the ignition switch OFF.

57. Remove the kick panel (see page 20-62). Then remove PGM-FI main relay 1 (FI MAIN) (A) from the under-hood fuse/relay box.

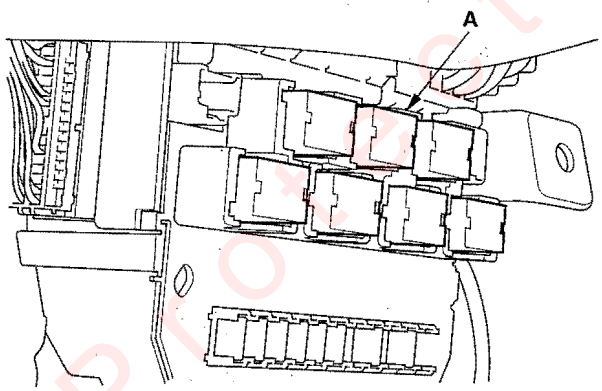

58. Turn the ignition switch ON (II).

59. Measure voltage between PGM-FI main relay 1 4P connector terminal No. 2 and body ground.

PGM-FI MAIN RELAY 1 (FI MAIN) 4P CONNECTOR

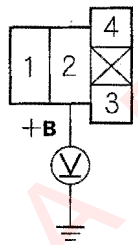

Terminal side of female terminals

Is there battery voltage?

YES – Go to step 60.

NO – Repair open in the wire between the No. 8 FI ECU (ECM/PCM) (15A) fuse and PGM-FI main relay 1 (FI MAIN). ■

60. Turn the ignition switch OFF.

61. Check for continuity between PGM-FI main relay 1 (FI MAIN) 4P connector terminal No. 1 and ECM/PCM connector terminal E4.

PGM-FI MAIN RELAY 1 (FI MAIN) 4P CONNECTOR

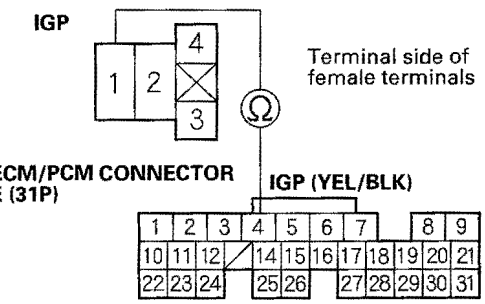

Wire side of female terminals

Is there continuity?

YES – Replace PGM-FI main relay 1 (FI MAIN). ■

NO – Repair open in the wire between PGM-FI main relay 1 (FI MAIN) and the ECM/PCM (E4). ■

(cont'd)

Protected by AR

MIL Circuit Troubleshooting (cont'd)

62. Measure voltage between body ground and ECM/PCM connector terminals B15, E1, E2, and E3 individually.

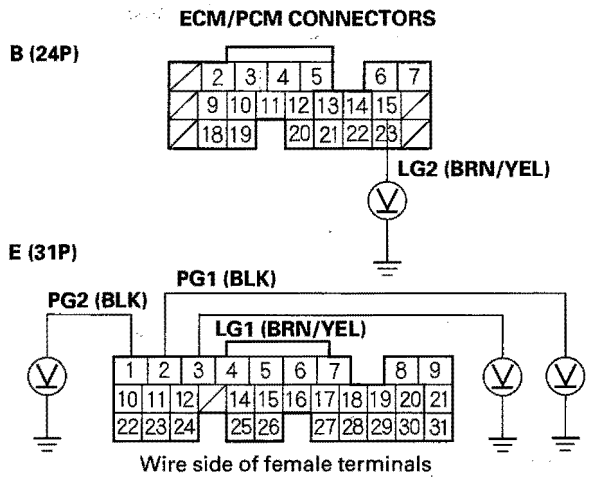

Wire side of female terminals

Is there more than 0.2 V?

YES—Repair open in the wire(s) that had more than 0.2 V between G101 and the ECM/PCM (B15, E1, E2, E3). ■

NO—Go to step 63.

63. Measure voltage between ECM/PCM connector terminal D6 and body ground.

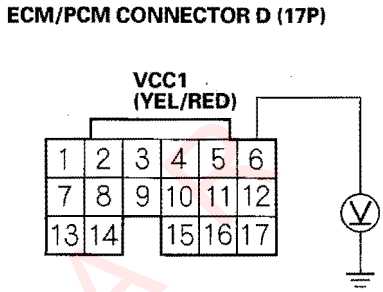

Wire side of female terminals

Is there about 5 V?

YES—Go to step 71.

NO—Go to step 64.

64. Turn the ignition switch OFF.

65. Disconnect the connector from each of these sensors, one at a time, and measure voltage between ECM/PCM connector terminal D6 and body ground with the ignition switch ON (II).

- MAP sensor
- Output shaft (countershaft) speed sensor

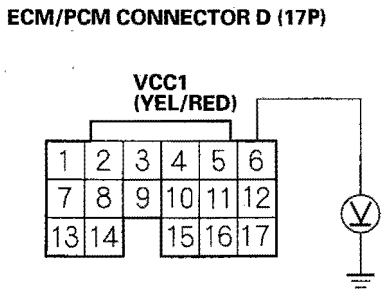

Wire side of female terminals

Is there about 5 V?

YES—Replace the sensor that restored 5 V when disconnected. ■

NO—Go to step 66.

Protected by A

66. Turn the ignition switch OFF.

67. Jump the SCS line with the HDS.

68. Disconnect the connectors from these sensors.

    • MAP sensor
    • Output shaft (countershaft) speed sensor

69. Disconnect ECM/PCM connector D (17P).

70. Check for continuity between ECM/PCM connector terminal D6 and body ground.

ECM/PCM CONNECTOR D (17P)

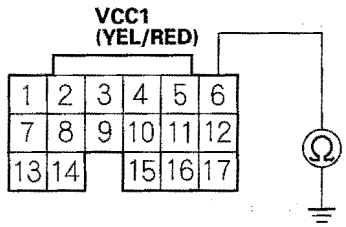

Wire side of female terminals

Is there continuity?

YES—Repair short in the wire between the ECM/PCM (D6) and the MAP sensor, or output shaft (countershaft) speed sensor. ■

NO—Update the ECM/PCM if it does not have the latest software, or substitute a known-good ECM/PCM, then recheck (see page 11-6). If the symptom/indication goes away with a known-good ECM/PCM, replace the original ECM/PCM (see page 11-171). ■

71. Measure voltage between ECM/PCM connector terminal D12 and body ground.

ECM/PCM CONNECTOR D (17P)

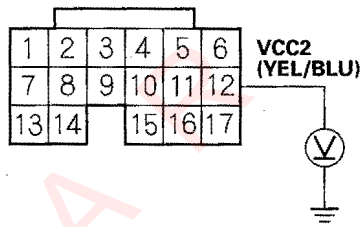

Wire side of female terminals

Is there about 5 V?

YES—Go to step 79.

NO—Go to step 72.

72. Turn the ignition switch OFF.

73. Disconnect the connector from each of these parts, one at a time, and measure voltage between ECM/PCM connector terminal D12 and body ground with the ignition switch ON (II).

    • APP sensor
    • Input shaft (mainshaft) speed sensor
    • IMT actuator assembly
    • EGR valve

ECM/PCM CONNECTOR D (17P)

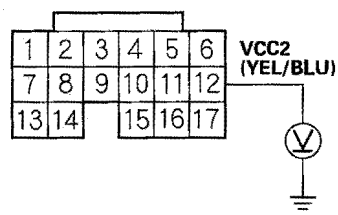

Wire side of female terminals

Is there about 5 V?

YES—Replace the part that restored 5 V when disconnected. ■

NO—Go to step 74.

(cont'd)

Presented by A

MIL Circuit Troubleshooting (cont'd)

74. Turn the ignition switch OFF.

75. Jump the SCS line with the HDS.

76. Disconnect the connectors from these parts:

    - APP sensor
    - Input shaft (mainshaft) speed sensor
    - IMT actuator assembly
    - EGR valve

77. Disconnect ECM/PCM connector D (17P).

78. Check for continuity between ECM/PCM connector terminal D12 and body ground.

ECM/PCM CONNECTOR D (17P)

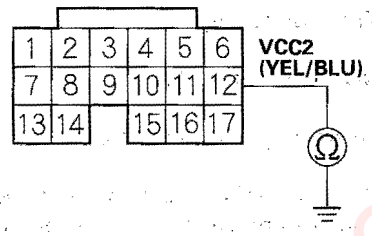

Wire side of female terminals

Is there continuity?

YES—Repair short in the wire between the ECM/PCM (D12) and the APP sensor, input shaft (mainshaft) speed sensor, IMT actuator assembly, or EGR valve.■

NO—Update the ECM/PCM if it does not have the latest software, or substitute a known-good ECM/PCM, then recheck (see page 11-6). If the symptom/indication goes away with a known-good ECM/PCM, replace the original ECM/PCM (see page 11-171).■

79. Measure voltage between ECM/PCM connector terminal D2 and body ground.

ECM/PCM CONNECTOR D (17P)

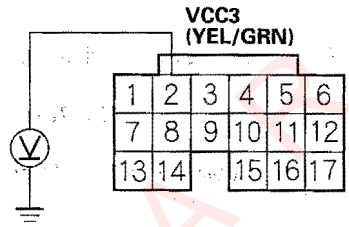

Wire side of female terminals

Is there about 5 V?

YES—Go to step 86.

NO—Go to step 80.

80. Turn the ignition switch OFF.

81. Disconnect the APP sensor 6P connector, and measure voltage between ECM/PCM connector terminal D2 and body ground with the ignition switch ON (II).

ECM/PCM CONNECTOR D (17P)

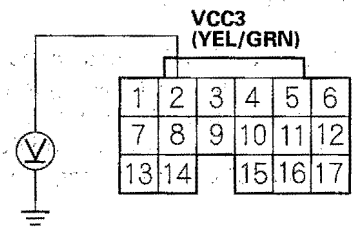

Wire side of female terminals

Is there about 5 V?

YES—Replace the APP sensor (see page 11-216).■

NO—Go to step 82.

Protected by AT

82. Turn the ignition switch OFF.

83. Jump the SCS line with the HDS.

84. Disconnect ECM/PCM connector D (17P).

85. Check for continuity between ECM/PCM connector terminal D2 and body ground.

ECM/PCM CONNECTOR D (17P)

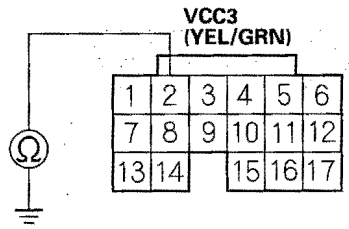

Wire side of female terminals

Is there continuity?

YES—Repair short in the wire between the ECM/PCM (D2) and the APP sensor.■

NO—Update the ECM/PCM if it does not have the latest software, or substitute a known-good ECM/PCM, then recheck (see page 11-6). If the symptom/indication goes away with a known-good ECM/PCM, replace the original ECM/PCM (see page 11-171).■

86. Measure voltage between ECM/PCM connector terminal A12 and body ground.

ECM/PCM CONNECTOR A (31P)

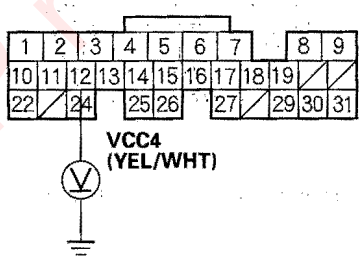

Wire side of female terminals

Is there about 5 V?

YES—Update the ECM/PCM if it does not have the latest software, or substitute a known-good ECM/PCM, then recheck (see page 11-6). If the symptom/indication goes away with a known-good ECM/PCM, replace the original ECM/PCM (see page 11-171).■

NO—Go to step 87.

87. Turn the ignition switch OFF.

88. Disconnect the FTP sensor 3P connector, and measure voltage between ECM/PCM connector terminal A12 and body ground with the ignition switch ON (II).

ECM/PCM CONNECTOR A (31P)

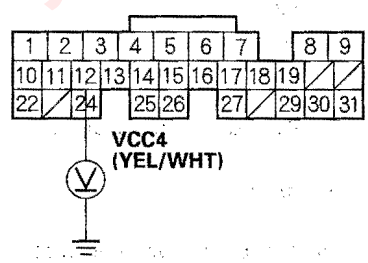

Wire side of female terminals

Is there about 5 V?

YES—Replace the FTP sensor (see page 11-325).■

NO—Go to step 89.

(cont'd)

Protected by AR

MIL Circuit Troubleshooting (cont'd)

89. Turn the ignition switch OFF.
90. Jump the SCS line with the HDS.
91. Disconnect ECM/PCM connector A (31P).
92. Check for continuity between ECM/PCM connector terminal A12 and body ground.

ECM/PCM CONNECTOR A (31P)

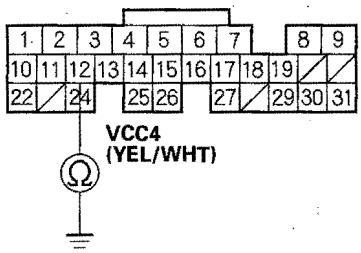

Wire side of female terminals

Is there continuity?

YES – Repair short in the wire between the ECM/PCM (A12) and the FTP sensor. ■

NO – Update the ECM/PCM if it does not have the latest software, or substitute a known-good ECM/PCM, then recheck (see page 11-6). If the symptom/indication goes away with a known-good ECM/PCM, replace the original ECM/PCM (see page 11-171). ■

DLC Circuit Troubleshooting

NOTE:
- If the ECM/PCM does not communicate with the HDS, do this troubleshooting procedure.
- Check that MIL circuit is normal, then do this troubleshooting.

1. Measure voltage between DLC terminal No. 16 and body ground.

DATA LINK CONNECTOR (DLC)

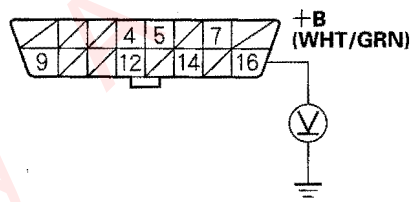

Terminal side of female terminals

Is there battery voltage?

YES – Go to step 2.

NO – Repair open in the wire between DLC terminal No. 16 and the No. 8 FI ECU (ECM/PCM) (15A) fuse in the under-hood fuse/relay box. ■

2. Measure voltage between DLC terminals No. 4 and No. 16.

DATA LINK CONNECTOR (DLC)

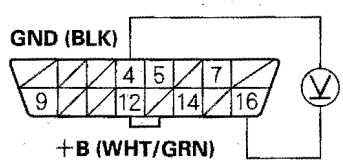

Terminal side of female terminals

Is there battery voltage?

YES – Go to step 3.

NO – Repair open in the wire between DLC terminal No. 4 and body ground (G503). ■

Protected by AIR

3. Measure voltage between DLC terminals No. 5 and No. 16.

DATA LINK CONNECTOR (DLC)

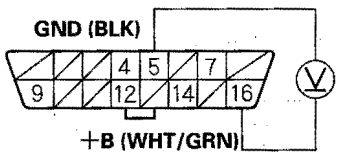

Terminal side of female terminals

Is there battery voltage?

YES—Go to step 4.

NO—Repair open in the wire between DLC terminal No. 5 and body ground (G503).■

4. Turn the ignition switch ON (II).

5. Measure voltage between DLC terminals No. 5 and No. 7.

DATA LINK CONNECTOR (DLC)

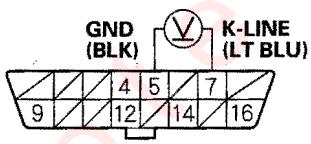

Terminal side of female terminals

Is there 8.5 V or more?

YES—Go to step 11.

NO—Go to step 6.

6. Turn the ignition switch OFF.

7. Jump the SCS line with the HDS.

8. Disconnect ECM/PCM connector E (31P).

9. Check for continuity between DLC terminal No. 7 and body ground.

DATA LINK CONNECTOR (DLC)

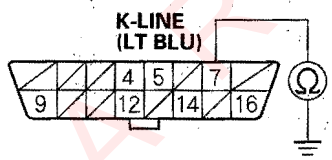

Terminal side of female terminals

Is there continuity?

YES—Repair short to ground in the wire between DLC terminal No. 7 and the ECM/PCM (A14). After repairing the wire, check for a DTC with the HDS and go to the indicated DTC's Troubleshooting.■

NO—Go to step 10.

10. Check for continuity between DLC terminal No. 7 and ECM/PCM terminal A14.

ECM/PCM CONNECTOR A (31P)

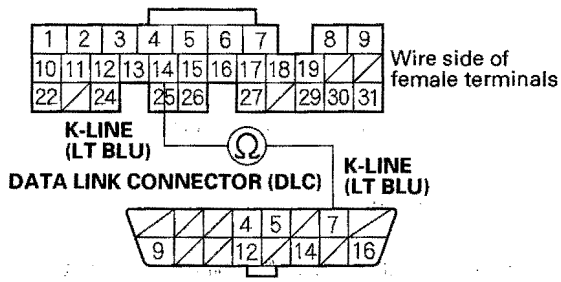

Terminal side of female terminals

(cont'd)

Protected by AR

DLC Circuit Troubleshooting (cont'd)

Is there continuity?

YES—Update the ECM/PCM if it does not have the latest software, or substitute a known-good ECM/PCM, then recheck (see page 11-6). If the symptom/indication goes away with a known-good ECM/PCM, replace the original ECM/PCM (see page 11-171).■

NO—Repair open in the wire between DLC terminal No. 7 and the ECM/PCM (A14). After repairing the wire, check for Temporary DTCs or DTCs with the HDS and go to the indicated DTC's Troubleshooting.■

11. Turn the ignition switch OFF.
12. Jump the SCS line with the HDS.
13. Disconnect ECM/PCM connector A (31P).
14. Turn the ignition switch ON (II).
15. Measure voltage between DLC terminals No. 5 and No. 7.

DATA LINK CONNECTOR (DLC)

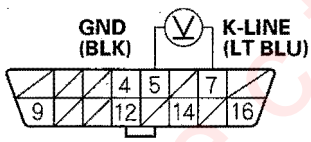

Terminal side of female terminals

Is there 0 V?

YES—Update the ECM/PCM if it does not have the latest software, or substitute a known-good ECM/PCM, then recheck (see page 11-6). If the symptom/indication goes away with a known-good ECM/PCM, replace the original ECM/PCM (see page 11-171).■

NO—Go to step 16.

16. Turn the ignition switch OFF.
17. Disconnect the VSA control unit 47P connector.
18. Check for continuity between VSA control unit 47P connector terminal No. 32 and body ground.

VSA CONTROL UNIT 47P CONNECTOR

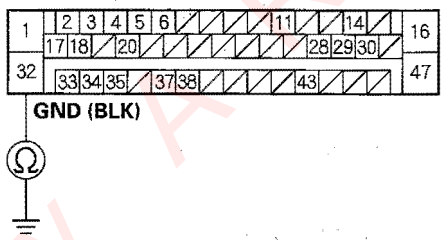

Wire side of female terminals

Is there continuity?

YES—Repair short to power in the wire between DLC terminal No. 7 and the ECM/PCM (A14). After repairing the wire, check for Temporary DTCs or DTCs with the HDS. If any Temporary DTCs or DTCs are indicated, go to the indicated DTC's Troubleshooting.■

NO—Repair open in the wire between the VSA control unit and G203. After repairing the wire, check for Temporary DTCs or DTCs with the HDS. If any Temporary DTCs or DTCs are indicated, go to the indicated DTC's Troubleshooting.■

Protected by AR

Injector Replacement

1. Relieve fuel pressure (see page 11-245).
2. Remove the intake manifold (see page 9-3).
3. Disconnect the connectors from the injectors (A).

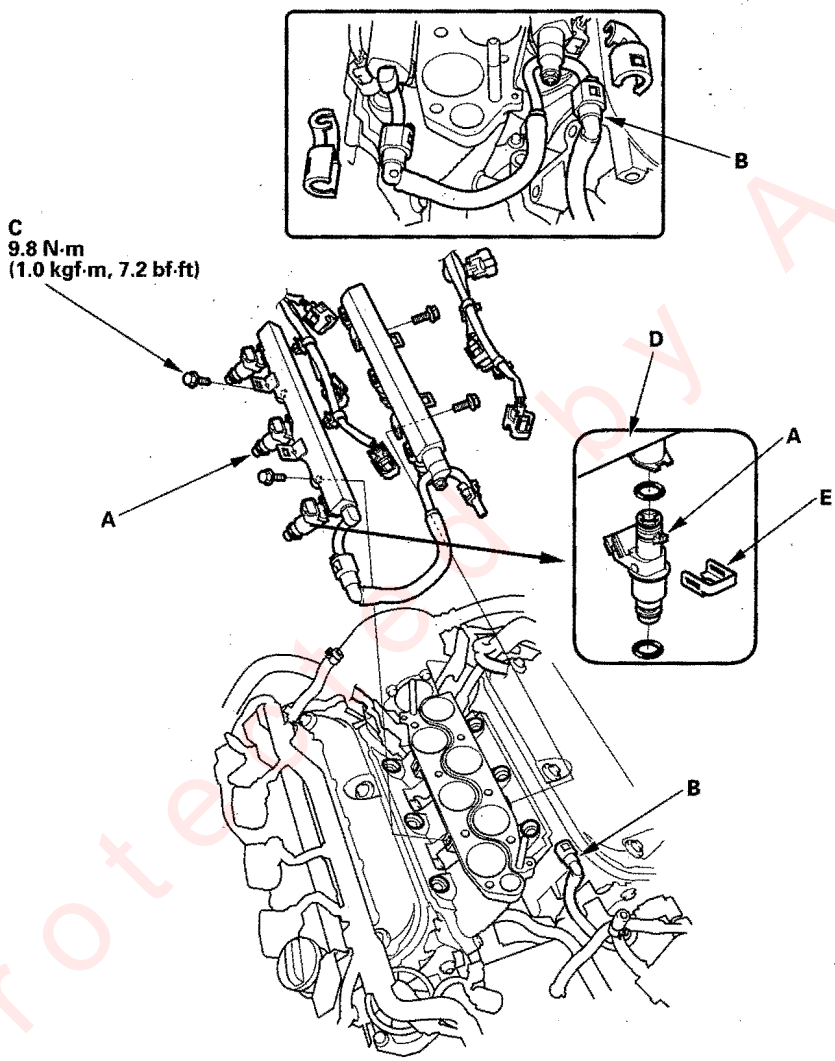

4. Disconnect the quick-connect fittings (B).
5. Remove the fuel rail mounting bolts (C) from the fuel rail (D).
6. Remove the injector clip (E) from the injector.
7. Remove the injector from the fuel rail.

Protected by AR

(cont'd)

Injector Replacement (cont'd)

8. Coat the new O-rings (A) with clean engine oil, and insert the injectors (B) into the fuel rail (C).

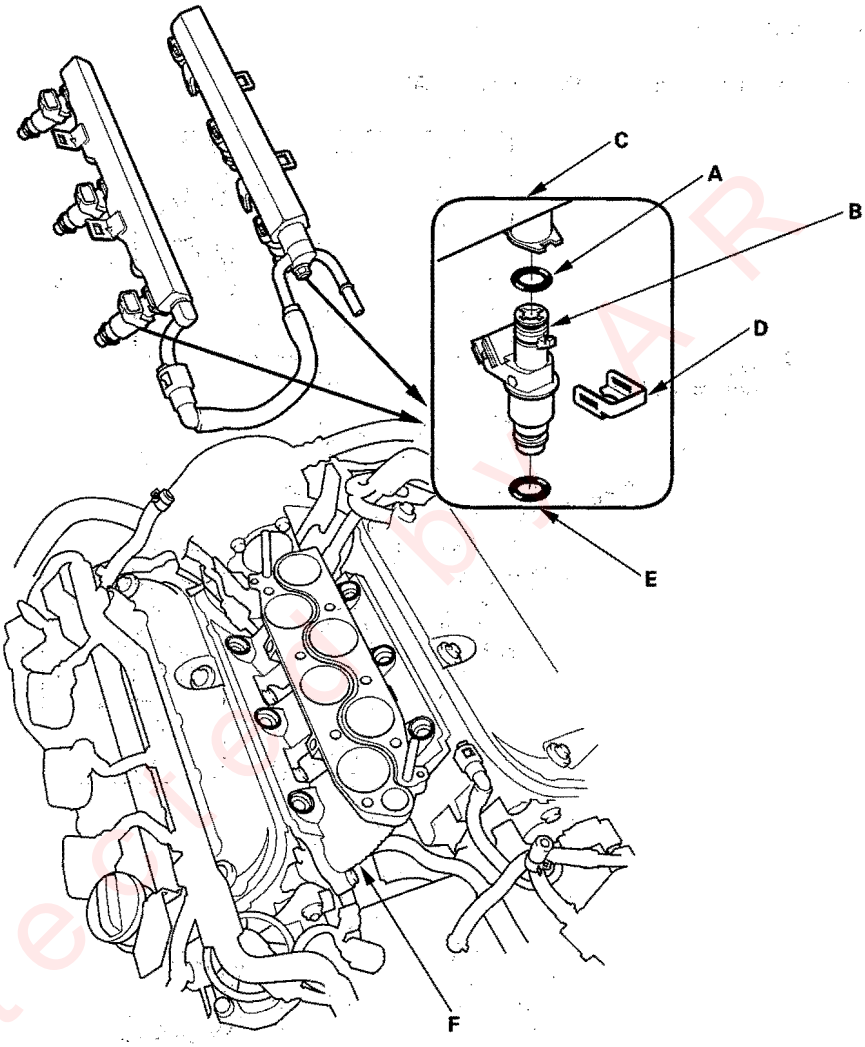

9. Install the injector clip (D).
10. Coat the injector O-rings (E) with clean engine oil.
11. Install the injectors in the injector base (F).
12. Install the fuel rail mounting nuts.
13. Connect the connectors on the injectors.
14. Connect the quick-connect fittings.
15. Turn the ignition switch ON (II), but do not operate the starter. After the fuel pump runs for about 2 seconds, the fuel rail will be pressurized. Repeat this two or three times, then check for fuel leakage.
16. Install the intake manifold (see page 9-4).

Protected by AR

A/F Sensor Replacement

Special Tools Required
O2 sensor socket wrench, Snap-on YA8875, SP Tools 93750, or equivalent, commercially available

Front Bank (Bank 2)

1. Disconnect the front A/F sensor 8P connector (A), then remove the A/F sensor (B).

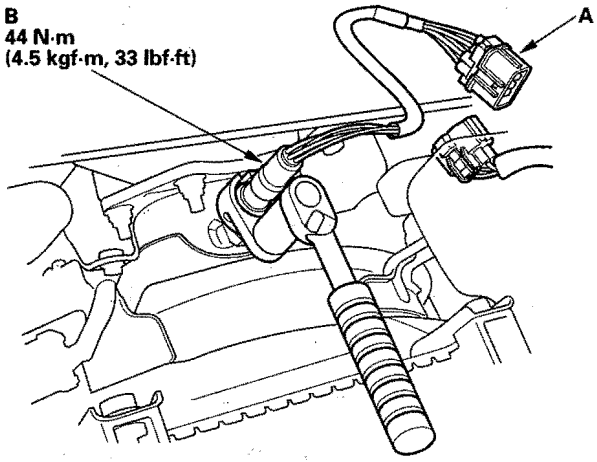

2. Install the front A/F sensor in the reverse order of removal.

Rear Bank (Bank 1)

1. Disconnect the rear A/F sensor 8P connector (A), then remove the rear A/F sensor (B).

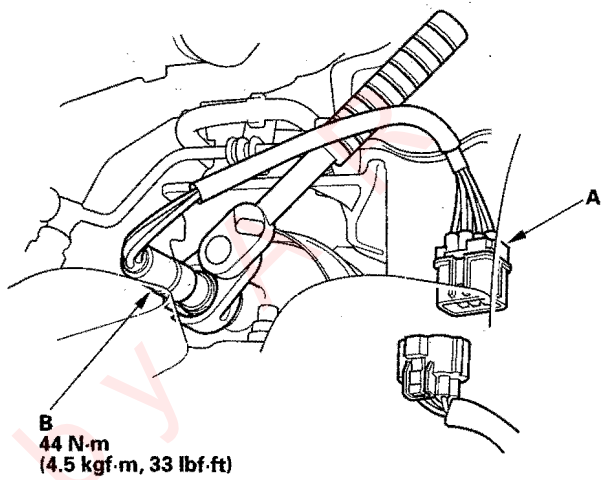

2. Install the rear A/F sensor in the reverse order of removal.

Protected by

Secondary HO2S Replacement

Special Tools Required
O2 sensor socket wrench, Snap-on YA8875, SP Tools 93750, or equivalent, commercially available

Front Bank (Bank 2)

1. Disconnect the front secondary HO2S 4P connector (A), then remove the front secondary HO2S (B).

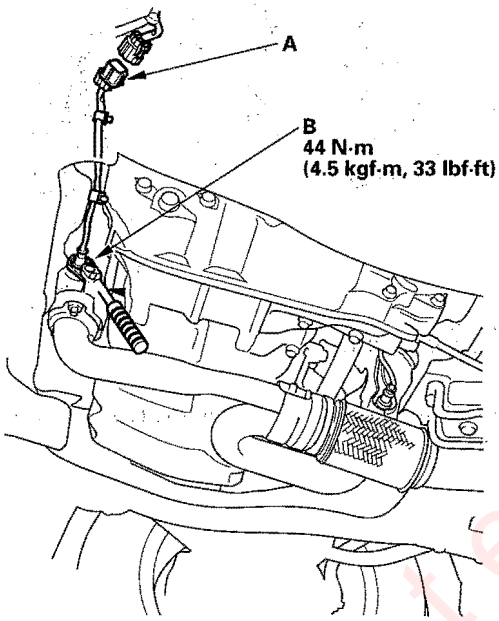

2. Install the front secondary HO2S in the reverse order of removal.

Rear Bank (Bank 1)

1. Disconnect the rear secondary HO2S 4P connector (A), then remove the rear secondary HO2S (B).

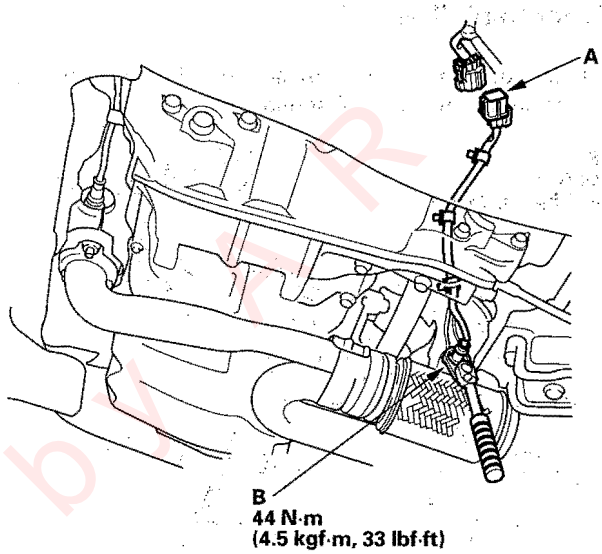

2. Install the rear secondary HO2S in the reverse order of removal.

Protected by MAR

ECT Sensor Replacement

1. Remove the air cleaner (see page 11-273).
2. Disconnect the ECT sensor connector (A).

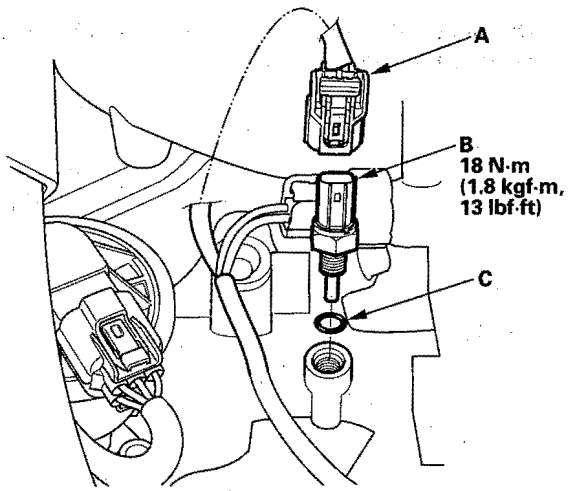

3. Remove the ECT sensor (B).
4. Install the sensor in the reverse order of removal with a new O-ring (C), then refill the radiator with engine coolant (see page 10-6).

IAT Sensor Replacement

1. Disconnect the IAT sensor connector (A).

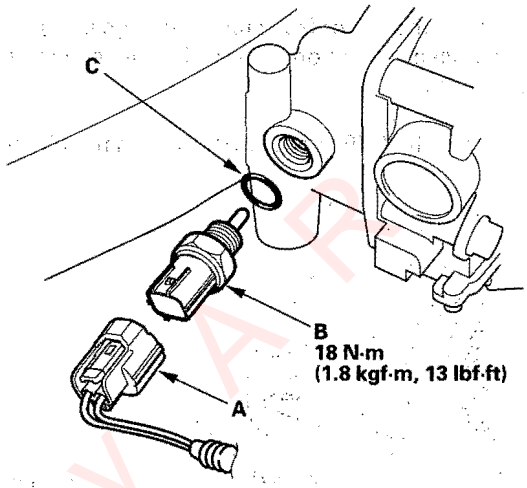

2. Remove the IAT sensor (B).
3. Install the sensor in the reverse order of removal with a new O-ring (C).

Protected by AR

CKP Sensor Replacement

1. Remove the crankshaft pulley (see page 6-12).
2. Remove the upper (see step 9 on page 6-15) and lower (see step 11 on page 6-15) front covers from the engine.
3. Remove the CKP sensor A/B (A) from the oil pump.

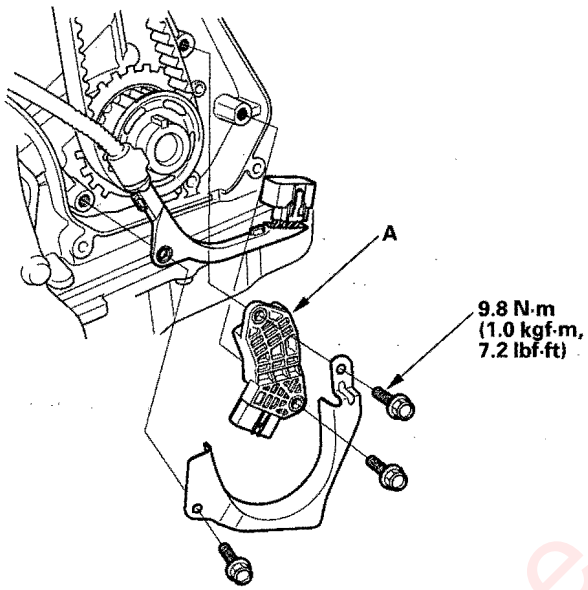

4. Install the sensor in the reverse order of removal.

Knock Sensor Replacement

1. Remove the intake manifold (see page 9-3).
2. Remove the fuel rails and the intake runner base.
3. Disconnect the knock sensor connector (A), then remove the knock sensor (B).

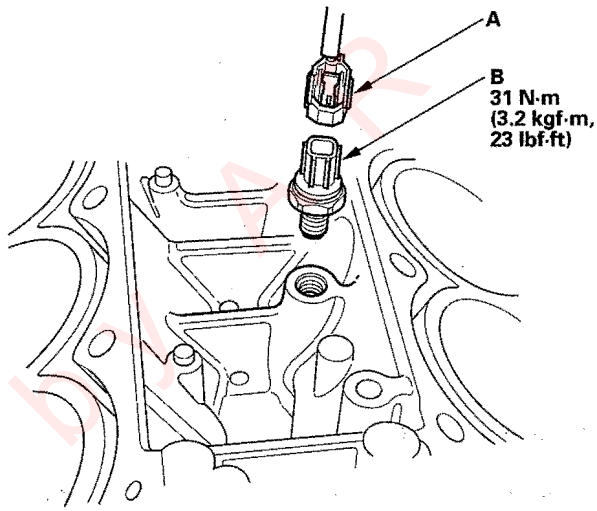

4. Install the sensor in the reverse order of removal.

Protected by MR

CMP Sensor Replacement

1. Set the No. 1 piston at top dead center (see step 3 on page 6-8).
2. Remove the crankshaft pulley (see page 6-12).
3. Remove the upper (see step 9 on page 6-15) and lower (see step 11 on page 6-15) front covers from the engine.
4. To hold the timing belt adjuster in its current position, thread in the battery clamp bolt hand-tight (see step 13 on page 6-15).
5. Loosen the idler pulley bolt about five or six turns, then remove the timing belt from the front camshaft pulley (see step 15 on page 6-16).
6. Remove the front camshaft pulley (A).

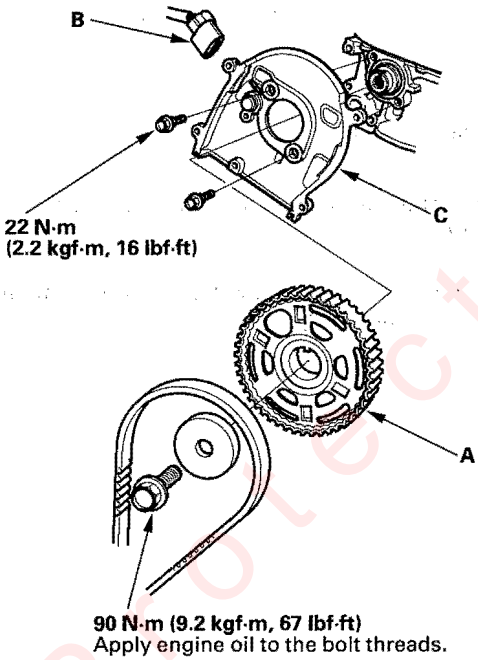

7. Disconnect the CMP sensor connector (B), then remove the back cover (C).
8. Remove the CMP sensor (A) from the back cover.

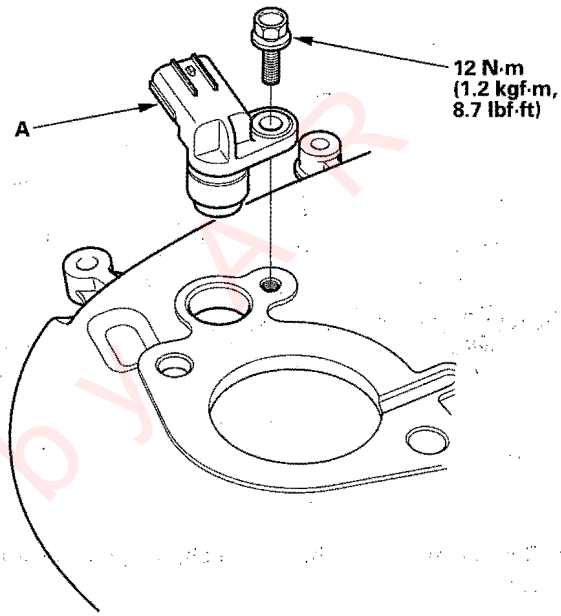

9. Install the sensor in the reverse order of removal. To install the timing belt (see page 6-16).

Protected by AR

Input Shaft (Mainshaft) Speed Sensor Replacement (M/T)

1. Disconnect the input shaft (mainshaft) speed sensor 3P connector (A).

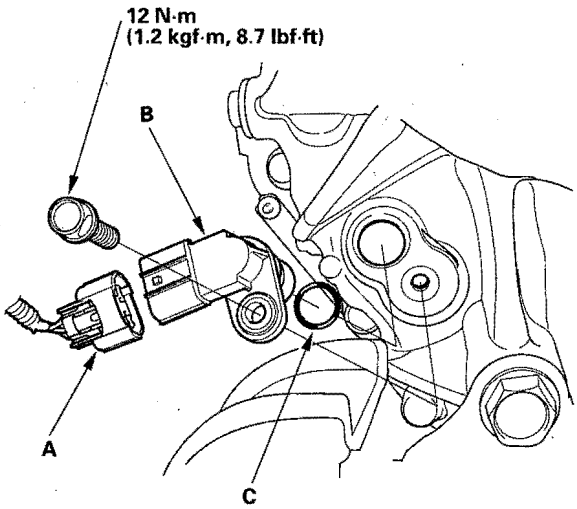

2. Remove the input shaft (mainshaft) speed sensor (B).

3. Install the sensor in the reverse order of removal with a new O-ring (C).

Output Shaft (Countershaft) Speed Sensor Replacement (M/T)

1. Disconnect the output shaft (countershaft) speed sensor 3P connector (A).

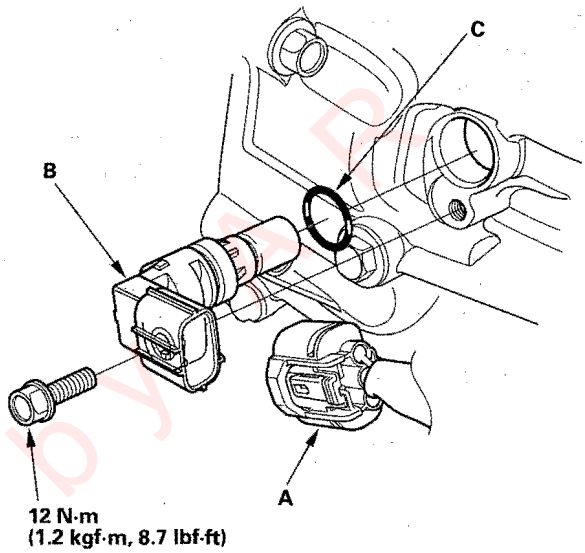

2. Remove the output shaft (countershaft) speed sensor (B).

3. Install the sensor in the reverse order of removal with a new O-ring (C).

Protected by

ECM/PCM Replacement

1. Connect the HDS to the data link connector (DLC) (A) located under the driver's side of the dashboard.

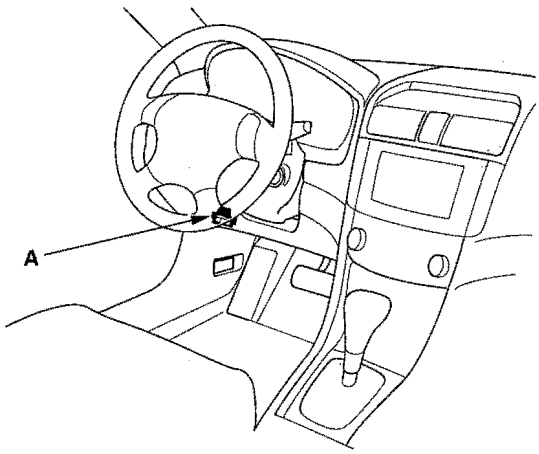

2. Turn the ignition switch ON (II).
3. Select READ DATA in the REPLACE ECM/PCM with the HDS.
4. Turn the ignition switch OFF.
5. Jump the SCS line with the HDS.
6. Pull back the carpet.
7. Remove the ducts (A).

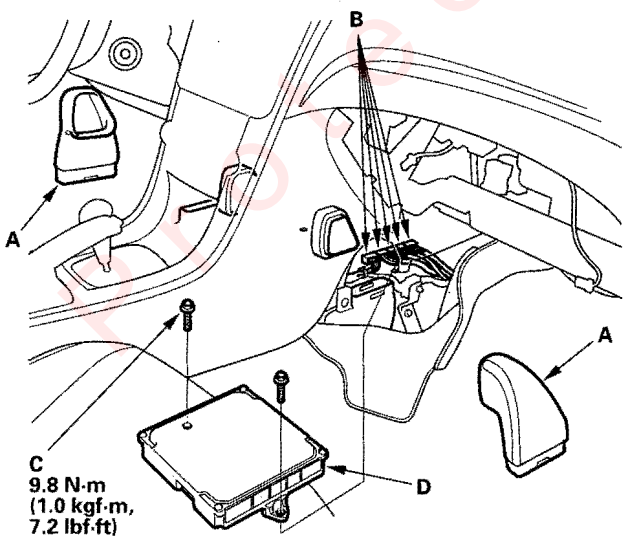

8. Disconnect the ECM/PCM connectors (B).
9. Remove the bolts (C), then remove the ECM/PCM (D).
10. Install the ECM in the reverse order of removal.
11. Open the SCS with the HDS.
12. Turn the ignition switch ON (II).

    NOTE: If DTC: P0630 "VIN Not Programmed or Mismatch" is stored at this time, ignore it and continue this procedure.

13. Input the VIN to the ECM/PCM with the HDS.
14. Select WRITE DATA in the REPLACE ECM/PCM with the HDS.
15. Rewrite the immobilizer code with the ECM/PCM replacement procedure in the HDS; it allows you to start the engine.
16. Reset the ECM/PCM with the HDS.
17. Do the Idle learn procedure (see page 11-239).
18. Do the CKP pattern learn procedure (see page 11-4).

Protected by SAR

Component Location Index

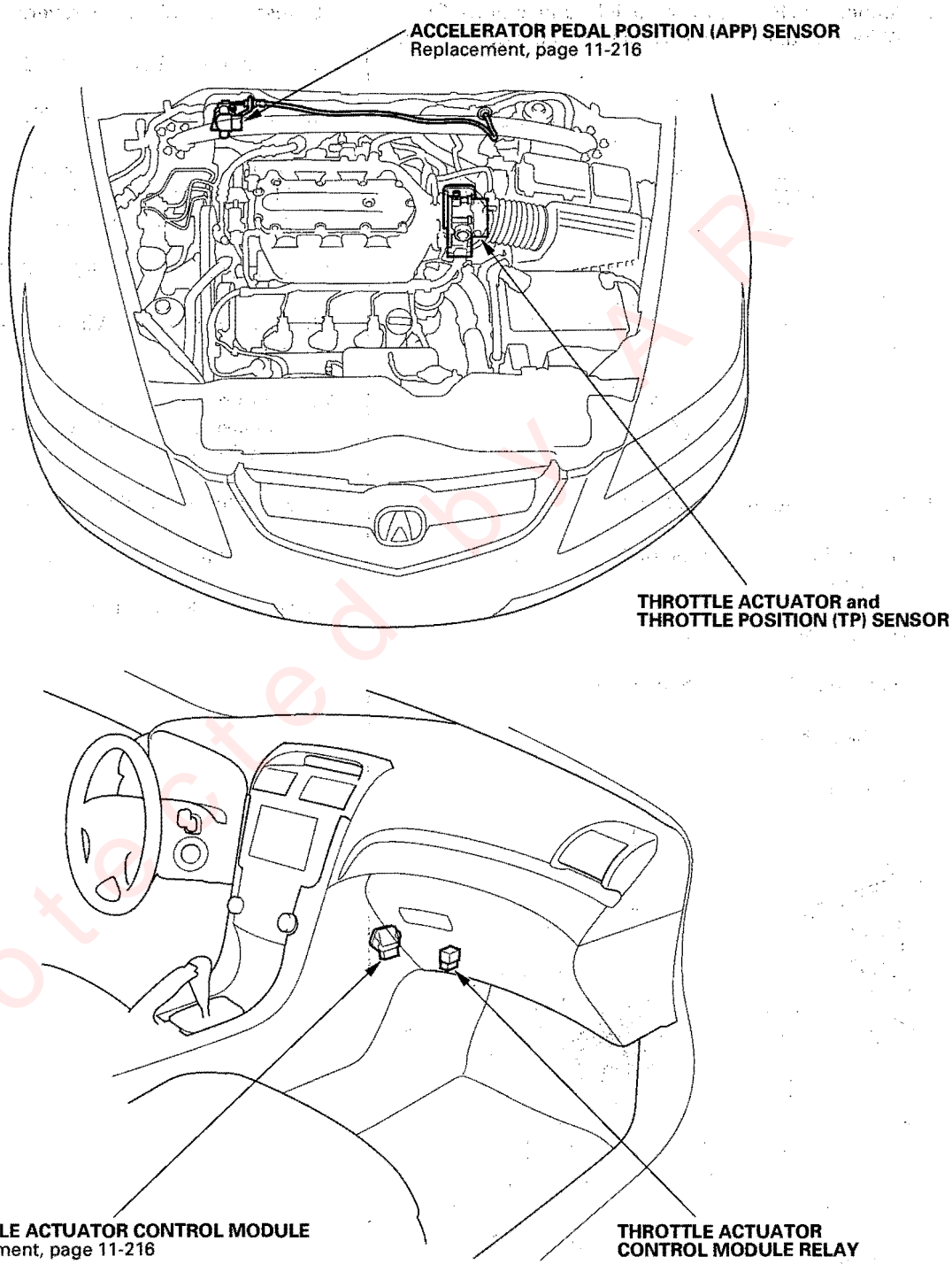

Protected by AR

DTC P0122: TP Sensor A Circuit Low Voltage

1. Turn the ignition switch ON (II).
2. Clear the DTC with the HDS.
3. Check TP SENSOR-A in the DATA LIST with the HDS.

   Is there about 0.3 V or less when the throttle is fully opened?

   YES—Go to step 4.

   NO—Intermittent failure, system is OK at this time. Check for poor connections or loose terminals at the throttle body and the throttle actuator control module. ■
4. Check for Temporary DTCs or DTCs with the HDS.

   Are DTC P0122 and P0222 indicated at the same time?

   YES—Check for poor connections or loose terminals at the throttle body, the throttle actuator control module, and at the ECM/PCM, then go to step 17. If the connections are OK, go to step 9.

   NO—Go to step 5.
5. Turn the ignition switch OFF.
6. Disconnect the throttle body 6P connector.
7. Disconnect the throttle actuator control module 16P connector.
8. Check for continuity between throttle body 6P connector terminal No. 1 and body ground.

THROTTLE BODY 6P CONNECTOR

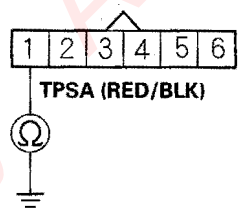

Wire side of female terminals

Is there continuity?

YES—Repair short in the wire between the throttle body and the throttle actuator control module (TPSA line), then go to step 17.

NO—Substitute a known-good throttle actuator control module (see page 11-216), then go to step 17 and recheck. If DTC P0122 is not indicated, replace the original throttle actuator control module, then go to step 17. If DTC P0122 is indicated, go to step 15.

(cont'd)

Protected by AR

DTC Troubleshooting (cont'd)

9. Measure voltage between throttle body 6P connector terminal No. 2 and body ground.

THROTTLE BODY 6P CONNECTOR

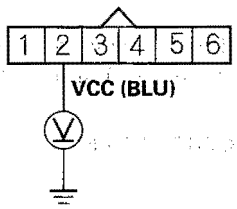

Wire side of female terminals

Is there about 5 V?

YES—Go to step 15.

NO—Go to step 10.

10. Turn the ignition switch OFF.
11. Disconnect the throttle actuator control module 16P connector.
12. Disconnect the throttle body 6P connector.
13. Connect throttle body 6P connector terminal No. 2 to body ground with a jumper wire.

THROTTLE BODY 6P CONNECTOR

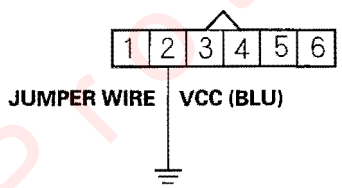

Wire side of female terminals

14. Check for continuity between throttle actuator control module 16P connector terminal No. 11 and body ground.

THROTTLE ACTUATOR CONTROL MODULE 16P CONNECTOR

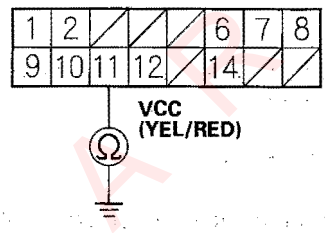

Wire side of female terminals

Is there continuity?

YES—Substitute a known-good throttle actuator control module (see page 11-216), then go to step 17 and recheck. If DTC P0122 is not indicated, replace the original throttle actuator control module, then go to step 17. If DTC P0122 is indicated, go to step 15.

NO—Repair open in the wire between the throttle body and the throttle actuator control module (VCC line), then go to step 17.

Protected by AR

15. Turn the ignition switch OFF.

16. Replace the throttle body (see page 11-277).

17. Turn the ignition switch ON (II).

18. Reset the ECM/PCM with the HDS.

19. Do the ECM/PCM idle learn procedure (see page 11-239).

20. Check for Temporary DTCs or DTCs with the HDS.

    Are any Temporary DTCs or DTCs indicated?

    YES—If DTC P0122 is indicated, check for poor connections or loose terminals at the throttle body and the throttle actuator control module, then go to step 1. If any other Temporary DTCs or DTCs are indicated, go to the indicated DTC's troubleshooting.

    NO—Troubleshooting is complete. ■

Protected by A R

DTC Troubleshooting (cont'd)

DTC P0123: TP Sensor A Circuit High Voltage

1. Turn the ignition switch ON (II).
2. Clear the DTC with the HDS.
3. Check TP SENSOR-A in the DATA LIST with the HDS.

   Is there about 4.8 V or more?

   YES—Go to step 4.

   NO—Intermittent failure, system is OK at this time. Check for poor connections or loose terminals at the throttle body and the throttle actuator control module. ■
4. Check for Temporary DTCs or DTCs with the HDS.

   Are DTC P0123 and P0223 indicated at the same time?

   YES—Go to step 11.

   NO—Go to step 5.
5. Measure voltage between throttle body 6P connector terminal No. 1 and body ground.

THROTTLE BODY 6P CONNECTOR

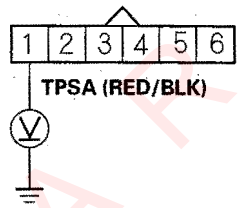

Wire side of female terminals

Is there about 5 V?

YES—Go to step 16.

NO—Go to step 6.

6. Turn the ignition switch OFF.
7. Disconnect the throttle actuator control module 16P connector.
8. Disconnect the throttle body 6P connector.
9. Connect throttle body 6P connector terminal No. 1 to body ground with a jumper wire.

THROTTLE BODY 6P CONNECTOR

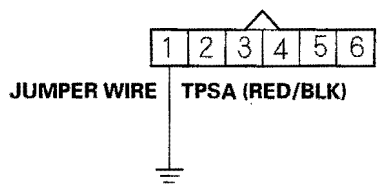

Wire side of female terminals

Protected by AP

10. Check for continuity between throttle actuator control module 16P connector terminal No. 10 and body ground.

THROTTLE ACTUATOR CONTROL MODULE 16P CONNECTOR

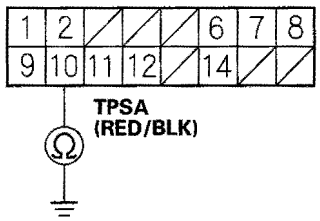

Wire side of female terminals

Is there continuity?

YES—Substitute a known-good throttle actuator control module (see page 11-216), then go to step 18 and recheck. If DTC P0123 is not indicated, replace the original throttle actuator control module, then go to step 18. If DTC P0123 is indicated, go to step 16.

NO—Repair open in the wire between the throttle body and the throttle actuator control module (TPSA line), then go to step 18.

11. Turn the ignition switch OFF.

12. Disconnect the throttle body 6P connector.

13. Disconnect the throttle actuator control module 16P connector.

14. Connect throttle body 6P connector terminal No. 4 to body ground with a jumper wire.

THROTTLE BODY 6P CONNECTOR

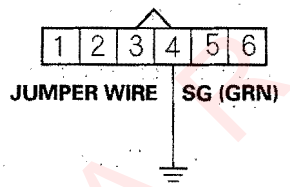

Wire side of female terminals

15. Check for continuity between throttle actuator control module 16P connector terminal No. 9 and body ground.

THROTTLE ACTUATOR CONTROL MODULE 16P CONNECTOR

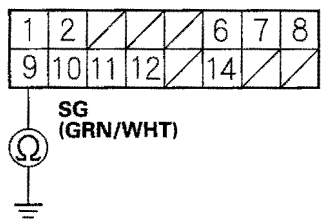

Wire side of female terminals

Is there continuity?

YES—Substitute a known-good throttle actuator control module (see page 11-216), then go to step 18 and recheck. If DTC P0123 is not indicated, replace the original throttle actuator control module, then go to step 18. If DTC P0123 is indicated, go to step 16.

NO—Repair open in the wire between the throttle body and the throttle actuator control module (SG line), then go to step 18.

(cont'd)

Protected by AP

DTC Troubleshooting (cont'd)

16. Turn the ignition switch OFF.
17. Replace the throttle body (see page 11-277).
18. Turn the ignition switch ON (II).
19. Reset the ECM/PCM with the HDS.
20. Do the ECM/PCM idle learn procedure (see page 11-239).
21. Check for Temporary DTCs or DTCs with the HDS.

    Are any Temporary DTCs or DTCs indicated?

    YES—If DTC P0123 is indicated, check for poor connections or loose terminals at the throttle body and the throttle actuator control module, then go to step 1. If any other Temporary DTCs or DTCs are indicated, go to the indicated DTC's troubleshooting.

    NO—Troubleshooting is complete. ■

Protected by AR

DTC P0222: TP Sensor B Circuit Low Voltage

1. Turn the ignition switch ON (II).
2. Clear the DTC with the HDS.
3. Check TP SENSOR-B in the DATA LIST with the HDS.

   Is there about 0.3 V or less when the throttle is fully opened?

   YES—Go to step 4.

   NO—Intermittent failure, system is OK at this time. Check for poor connections or loose terminals at the throttle body and the throttle actuator control module. ■
4. Check for Temporary DTCs or DTCs with the HDS.

   Are DTC P0122 and P0222 indicated at the same time?

   YES—Check for poor connections or loose terminals at the throttle body, the throttle actuator control module, and at the ECM/PCM, then go to step 17. If the connections are OK, go to step 9.

   NO—Go to step 5.
5. Turn the ignition switch OFF.
6. Disconnect the throttle body 6P connector.
7. Disconnect the throttle actuator control module 16P connector.
8. Check for continuity between throttle body 6P connector terminal No. 3 and body ground.

THROTTLE BODY 6P CONNECTOR

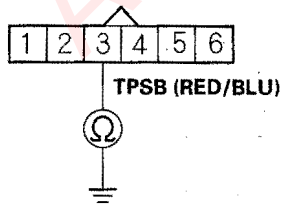

Wire side of female terminals

Is there continuity?

YES—Repair short in the wire between the throttle body and the throttle actuator control module (TPSB line), then go to step 17.

NO—Substitute a known-good throttle actuator control module (see page 11-216), then go to step 17 and recheck. If DTC P0222 is not indicated, replace the original throttle actuator control module, then go to step 17. If DTC P0222 is indicated, go to step 15.

(cont'd)

Protected by AR

DTC Troubleshooting (cont'd)

9. Measure voltage between throttle body 6P connector terminal No. 2 and body ground.

THROTTLE BODY 6P CONNECTOR

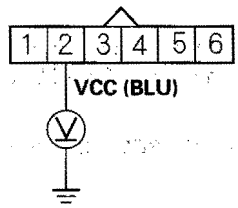

Wire side of female terminals

Is there about 5 V?

YES—Go to step 15.

NO—Go to step 10.

10. Turn the ignition switch OFF.
11. Disconnect the throttle actuator control module 16P connector.
12. Disconnect the throttle body 6P connector.
13. Connect throttle body 6P connector terminal No. 2 to body ground with a jumper wire.

THROTTLE BODY 6P CONNECTOR

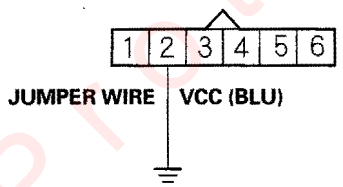

Wire side of female terminals

14. Check for continuity between throttle actuator control module 16P connector terminal No. 11 and body ground.

THROTTLE ACTUATOR CONTROL MODULE 16P CONNECTOR

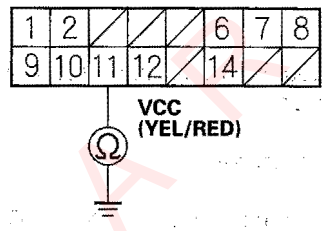

Wire side of female terminals

Is there continuity?

YES—Substitute a known-good throttle actuator control module (see page 11-216), then go to step 17 and recheck. If DTC P0222 is not indicated, replace the original throttle actuator control module, then go to step 17. If DTC P0222 is indicated, go to step 15.

NO—Repair open in the wire between the throttle body and the throttle actuator control module (VCC line), then go to step 17.

Protected by ARP

15. Turn the ignition switch OFF.

16. Replace the throttle body (see page 11-277).

17. Turn the ignition switch ON (II).

18. Reset the ECM/PCM with the HDS.

19. Do the ECM/PCM idle learn procedure (see page 11-239).

20. Check for Temporary DTCs or DTCs with the HDS.

    Are any Temporary DTCs or DTCs indicated?

    YES—If DTC P0222 is indicated, check for poor connections or loose terminals at the throttle body and the throttle actuator control module, then go to step 1. If any other Temporary DTCs or DTCs are indicated, go to the indicated DTC's troubleshooting.

    NO—Troubleshooting is complete. ■

Protected by AR

DTC Troubleshooting (cont'd)

DTC P0223: TP Sensor B Circuit High Voltage

1. Turn the ignition switch ON (II).
2. Clear the DTC with the HDS.
3. Check TP SENSOR-B in the DATA LIST with the HDS.

   Is there about 4.8 V or more?

   YES – Go to step 4.

   NO – Intermittent failure, system is OK at this time. Check for poor connections or loose terminals at the throttle body and the throttle actuator control module. ■
4. Check for Temporary DTCs or DTCs with the HDS.

   Are DTC P0123 and P0223 indicated at the same time?

   YES – Go to step 11.

   NO – Go to step 5.
5. Measure voltage between throttle body 6P connector terminal No. 3 and body ground.

THROTTLE BODY 6P CONNECTOR

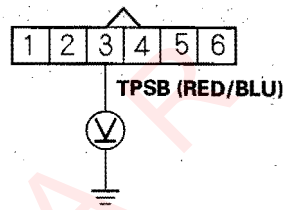

Wire side of female terminals

Is there about 5 V?

YES – Go to step 16.

NO – Go to step 6.

6. Turn the ignition switch OFF.
7. Disconnect the throttle actuator control module 16P connector.
8. Disconnect the throttle body 6P connector.
9. Connect throttle body 6P connector terminal No. 3 to body ground with a jumper wire.

THROTTLE BODY 6P CONNECTOR

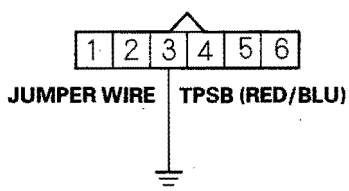

Wire side of female terminals

Protected by ARP

10. Check for continuity between throttle actuator control module 16P connector terminal No. 12 and body ground.

THROTTLE ACTUATOR CONTROL MODULE 16P CONNECTOR

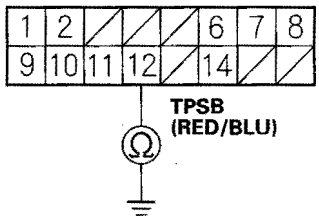

Wire side of female terminals

Is there continuity?

YES—Substitute a known-good throttle actuator control module (see page 11-216), then go to step 18 and recheck. If DTC P0223 is not indicated, replace the original throttle actuator control module, then go to step 18. If DTC P0223 is indicated, go to step 16.

NO—Repair open in the wire between the throttle body and the throttle actuator control module (TPSB line), then go to step 18.

11. Turn the ignition switch OFF.

12. Disconnect the throttle body 6P connector.

13. Disconnect the throttle actuator control module 16P connector.

14. Connect throttle body 6P connector terminal No. 4 to body ground with a jumper wire.

THROTTLE BODY 6P CONNECTOR

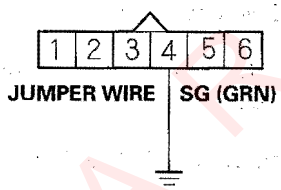

Wire side of female terminals

15. Check for continuity between throttle actuator control module 16P connector terminal No. 9 and body ground.

THROTTLE ACTUATOR CONTROL MODULE 16P CONNECTOR

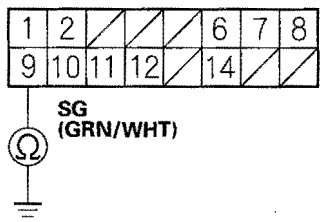

Wire side of female terminals

Is there continuity?

YES—Substitute a known-good throttle actuator control module (see page 11-216), then go to step 18 and recheck. If DTC P0223 is not indicated, replace the original throttle actuator control module, then go to step 18. If DTC P0223 is indicated, go to step 16.

NO—Repair open in the wire between the throttle body and the throttle actuator control module (SG line), then go to step 18.

(cont'd)

Protected by AFA

DTC Troubleshooting (cont'd)

16. Turn the ignition switch OFF.
17. Replace the throttle body (see page 11-277).
18. Turn the ignition switch ON (II).
19. Reset the ECM/PCM with the HDS.
20. Do the ECM/PCM idle learn procedure (see page 11-239).
21. Check for Temporary DTCs or DTCs with the HDS.

    Are any Temporary DTCs or DTCs indicated?

    YES—If DTC P0223 is indicated, check for poor connections or loose terminals at the throttle body and the throttle actuator control module, then go to step 1. If any other Temporary DTCs or DTCs are indicated, go to the indicated DTC's troubleshooting.

    NO—Troubleshooting is complete.■

Protected by AR

DTC P2135: TP Sensor A/B Voltage Incorrect Correlation

1. Turn the ignition switch ON (II).
2. Clear the DTC with the HDS.
3. Do the ETCS TEST in the INSPECTION MENU with the HDS.
4. Check for Temporary DTCs or DTCs with the HDS.

   Is DTC P2135 indicated?

   YES—Go to step 5.

   NO—Intermittent failure, system is OK at this time. Check for poor connections or loose terminals at the throttle body and the throttle actuator control module.■
5. Turn the ignition switch OFF.
6. Disconnect the intake air duct from the throttle body.
7. Turn the ignition switch ON (II).
8. Clear the DTC with the HDS.
9. Visually check the throttle valve operation.

   Does the valve move to the fully closed position temporarily?

   YES—Go to step 14.

   NO—Go to step 10.
10. Turn the ignition switch OFF.
11. Disconnect the throttle actuator control module 16P connector.
12. Check for continuity between throttle actuator control module 16P connector terminals No. 10 and No. 12.

THROTTLE ACTUATOR CONTROL MODULE 16P CONNECTOR

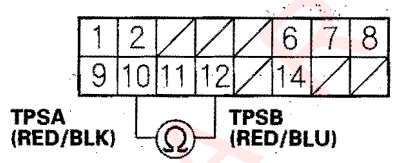

Wire side of female terminals

Is there continuity?

YES—Go to step 13.

NO—Substitute a known-good throttle actuator control module (see page 11-216), then go to step 16 and recheck. If DTC P2135 is not indicated, replace the original throttle actuator control module (see page 11-216), then go to step 16.

(cont'd)

DTC Troubleshooting (cont'd)

13. Disconnect the throttle body 6P connector.

14. Check for continuity between throttle actuator control module 16P connector terminals No. 10 and No. 12.

THROTTLE ACTUATOR CONTROL MODULE 16P CONNECTOR

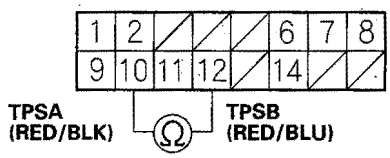

Wire side of female terminals

Is there continuity?

YES—Repair short in the wire between the TPSA line and the TPSB line, then go to step 16.

NO—Go to step 15.

15. Turn the ignition switch OFF.

16. Replace the throttle body (see page 11-277).

17. Turn the ignition switch ON (II).

18. Reset the ECM/PCM with the HDS.

19. Do the ECM/PCM idle learn procedure (see page 11-239).

20. Check for Temporary DTCs or DTCs with the HDS.

Are any Temporary DTCs or DTCs indicated?

YES—If DTC P2135 is indicated, check for poor connections or loose terminals at the throttle body and the throttle actuator control module, then go to step 1. If any other Temporary DTCs or DTCs are indicated, go to the indicated DTC's troubleshooting.

NO—Troubleshooting is complete.■

Protected by A R

DTC P2122: APP Sensor A (Throttle Position Sensor D) Circuit Low Voltage

1. Turn the ignition switch ON (II).
2. Check APP SENSOR-A in the DATA LIST with the HDS.

   Is there about 0.1 V, or less with the accelerator pedal fully pressed?

   YES – Go to step 3.

   NO – Intermittent failure, system is OK at this time. Check for poor connections or loose terminals at APP sensor A and at the ECM/PCM. ■
3. Turn the ignition switch OFF.
4. Disconnect the APP sensor 6P connector.
5. Turn the ignition switch ON (II).
6. At the wire harness side, measure voltage between APP sensor 6P connector terminals No. 5 and No. 6.

APP SENSOR 6P CONNECTOR

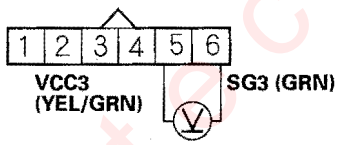

Wire side of female terminals

Is there about 5 V?

YES – Go to step 7.

NO – Go to step 15.

7. Turn the ignition switch OFF.
8. At the sensor side, measure resistance between APP sensor 6P connector terminals No. 4 and No. 6 with the throttle fully closed.

APP SENSOR 6P CONNECTOR

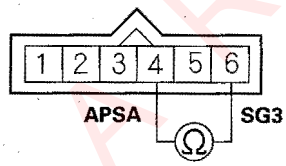

Terminal side of male terminals

Is there about 0.35 – 0.45 kΩ at room temperature?

YES – Go to step 9.

NO – Go to step 16.

9. At the sensor side, measure resistance between APP sensor 6P connector terminals No. 4 and No. 5 with the throttle fully closed.

APP SENSOR 6P CONNECTOR

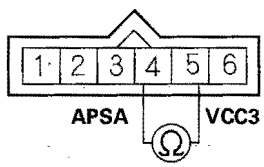

Terminal side of male terminals

Is there about 2.7 – 3.3 kΩ at room temperature?

YES – Go to step 10.

NO – Go to step 16.

(cont'd)

Protected by AIR

DTC Troubleshooting (cont'd)

10. Jump the SCS line with the HDS.
11. Disconnect ECM/PCM connector D (17P).
12. At the wire harness side, check for continuity between APP sensor 6P connector terminal No. 4 and body ground.

APP SENSOR 6P CONNECTOR

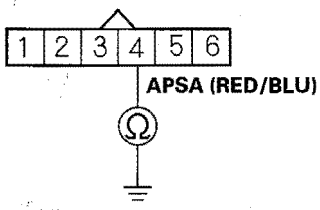

Wire side of female terminals

Is there continuity?

YES – Repair short in the wire between APP sensor A and ECM/PCM (D3), then go to step 17.

NO – Go to step 13.

13. Connect ECM/PCM connector terminal D3 to body ground with a jumper wire.

ECM/PCM CONNECTOR D (17P)

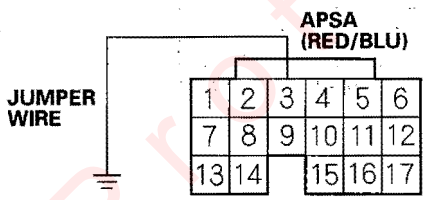

Wire side of female terminals

14. At the wire harness side, check for continuity between APP sensor 6P connector terminal No. 4 and body ground.

APP SENSOR 6P CONNECTOR

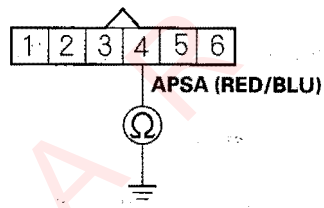

Wire side of female terminals

Is there continuity?

YES – Go to step 22.

NO – Repair open in the wire between APP sensor A and the ECM/PCM (D3), then go to step 17.

15. Measure voltage between ECM/PCM connector terminals D2 and D15.

ECM/PCM CONNECTOR D (17P)

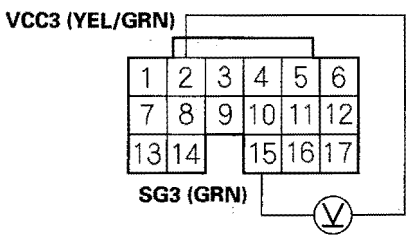

Wire side of female terminals

Is there about 5 V?

YES – Repair open in the wire between the ECM/PCM (D2) and APP sensor A, then go to step 17.

NO – Go to step 22.

Protected by Am

16. Replace the APP sensor (see page 11-216).

17. Reconnect all connectors.

18. Turn the ignition switch ON (II).

19. Reset the ECM/PCM with the HDS.

20. Do the ECM/PCM idle learn procedure (see page 11-239).

21. Check for Temporary DTCs or DTCs with the HDS.

    Are any Temporary DTCs or DTCs indicated?

    YES—If DTC P2122 is indicated, check for poor connections or loose terminals at APP sensor A and the ECM/PCM, then go to step 1. If any other Temporary DTCs or DTCs are indicated, go to the indicated DTC's troubleshooting.

    NO—Troubleshooting is complete.■

22. Update the ECM/PCM if it does not have the latest software, or substitute a known-good ECM/PCM (see page 11-6).

23. Check for Temporary DTCs or DTCs with the HDS.

    Are any Temporary DTCs or DTCs indicated?

    YES—If DTC P2122 is indicated, check for poor connections or loose terminals at APP sensor A and the ECM/PCM, then go to step 1. If any other Temporary DTCs or DTCs are indicated, go to the indicated DTC's troubleshooting.

    NO—If the ECM/PCM was updated, troubleshooting is complete. If the ECM/PCM was substituted, replace the original ECM/PCM (see page 11-171).■

Protected by AR

DTC Troubleshooting (cont'd)

DTC P2123: APP Sensor A (Throttle Position Sensor D) Circuit High Voltage

1. Turn the ignition switch ON (II).
2. Check APP SENSOR-A in the DATA LIST with the HDS.

   Is there about 4.9 V, or more?

   YES—Go to step 3.

   NO—Intermittent failure, system is OK at this time. Check for poor connections or loose terminals at the APP sensor A and at the ECM/PCM. ■
3. Turn the ignition switch OFF.
4. Disconnect the APP sensor 6P connector.
5. Turn the ignition switch ON (II).
6. At the wire harness side, measure voltage between the APP sensor 6P connector terminals No. 5 and No. 6.

APP SENSOR 6P CONNECTOR

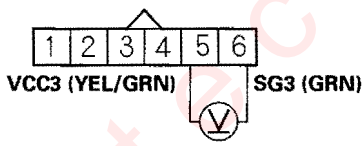

Wire side of female terminals

Is there about 5 V?

YES—Go to step 8.

NO—Go to step 7.

7. Measure voltage between ECM/PCM connector terminals D2 and D15.

ECM/PCM CONNECTOR D (17P)

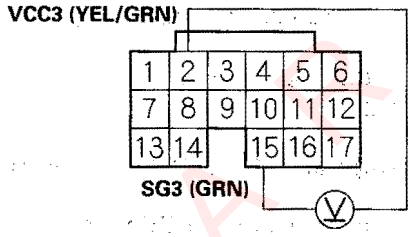

Wire side of female terminals

Is there about 5 V?

YES—Repair open in the wire between the ECM/PCM (D15) and APP sensor A, then go to step 10.

NO—Go to step 14.

8. Turn the ignition switch OFF.
9. Replace the APP sensor (see page 11-216).
10. Turn the ignition switch ON (II).
11. Reset the ECM/PCM with the HDS.
12. Do the ECM/PCM idle learn procedure (see page 11-239).
13. Check for Temporary DTCs or DTCs with the HDS.

    Are any Temporary DTCs or DTCs indicated?

    YES—If DTC P2123 is indicated, check for poor connections or loose terminals at APP sensor A and the ECM/PCM, then go to step 1. If any other Temporary DTCs or DTCs are indicated, go to the indicated DTC's troubleshooting.

    NO—Troubleshooting is complete. ■

Protected by ACR

14. Update the ECM/PCM if it does not have the latest software, or substitute a known-good ECM/PCM (see page 11-6).

15. Check for Temporary DTCs or DTCs with the HDS.

    Are any Temporary DTCs or DTCs indicated?

    YES—If DTC P2123 is indicated, check for poor connections or loose terminals at the APP sensor A and the ECM/PCM, then go to step 1. If any other Temporary DTCs or DTCs are indicated, go to the indicated DTC's troubleshooting.

    NO—If the ECM/PCM was updated, troubleshooting is complete. If the ECM/PCM was substituted, replace the original ECM/PCM (see page 11-171).■

Protected by AR

DTC Troubleshooting (cont'd)

DTC P2127: APP Sensor B (Throttle Position Sensor E) Circuit Low Voltage

1. Turn the ignition switch ON (II).
2. Check APP SENSOR-B in the DATA LIST with the HDS.

   Is there about 0.1 V, or less with the accelerator pedal fully pressed?

   YES – Go to step 3.

   NO – Intermittent failure, system is OK at this time. Check for poor connections or loose terminals at APP sensor B and at the ECM/PCM. ■
3. Turn the ignition switch OFF.
4. Disconnect the APP sensor 6P connector.
5. Turn the ignition switch ON (II).
6. At the wire harness side, measure voltage between APP sensor 6P connector terminals No. 1 and No. 2.

APP SENSOR 6P CONNECTOR

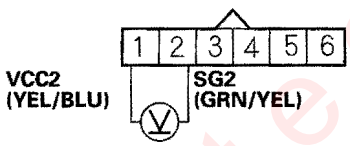

Wire side of female terminals

Is there about 5 V?

YES – Go to step 7.

NO – Go to step 15.

7. Turn the ignition switch OFF.
8. At the sensor side, measure resistance between APP sensor 6P connector terminals No. 2 and No. 3 with the throttle fully closed.

APP SENSOR 6P CONNECTOR

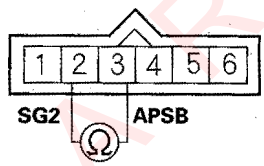

Terminal side of male terminals

Is there about 0.35 – 0.45 kΩ at room temperature?

YES – Go to step 9.

NO – Go to step 16.

9. At the sensor side, measure resistance between APP sensor 6P connector terminals No. 1 and No. 3 with the throttle fully closed.

APP SENSOR 6P CONNECTOR

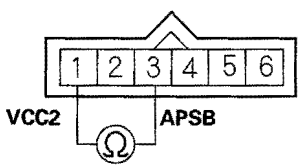

Terminal side of male terminals

Is there about 5.9 – 7.3 kΩ at room temperature?

YES – Go to step 10.

NO – Go to step 16.

Protected by AR

10. Jump the SCS line with the HDS.

11. Disconnect ECM/PCM connector D (17P).

12. At the wire harness side, check for continuity between APP sensor 6P connector terminal No. 3 and body ground.

APP SENSOR 6P CONNECTOR

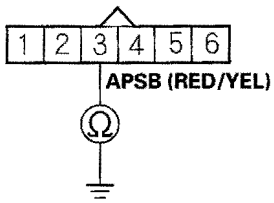

Wire side of female terminals

Is there continuity?

YES—Repair short in the wire between APP sensor B and the ECM/PCM (D9), then go to step 17.

NO—Go to step 13.

13. Connect ECM/PCM connector terminal D9 to body ground with a jumper wire.

ECM/PCM CONNECTOR D (17P)

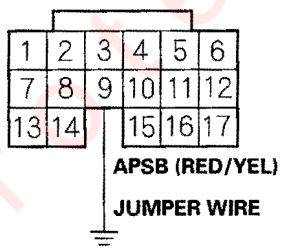

Wire side of female terminals

14. At the wire harness side, check for continuity between APP sensor 6P connector terminal No. 3 and body ground.

APP SENSOR 6P CONNECTOR

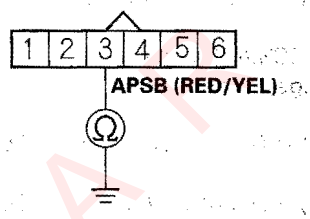

Wire side of female terminals

Is there continuity?

YES—Go to step 22.

NO—Repair open in the wire between APP sensor B and ECM/PCM (D9), then go to step 17.

15. Measure voltage between ECM/PCM connector terminals D10 and D12.

ECM/PCM CONNECTOR D (17P)

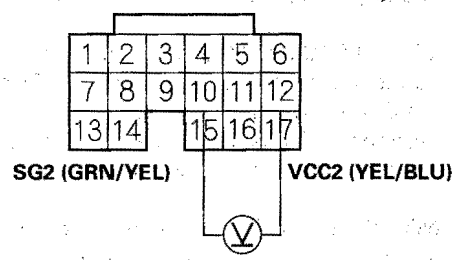

Wire side of female terminals

Is there about 5 V?

YES—Repair open in the wire between the ECM/PCM (D12) and APP sensor B, then go to step 17.

NO—Go to step 22.

(cont'd)

Protected by AT

DTC Troubleshooting (cont'd)

16. Replace the APP sensor (see page 11-216).
17. Reconnect all connectors.
18. Turn the ignition switch ON (II).
19. Reset the ECM/PCM with the HDS.
20. Do the ECM/PCM idle learn procedure (see page 11-239).
21. Check for Temporary DTCs or DTCs with the HDS.

    Are any Temporary DTCs or DTCs indicated?

    YES—If DTC P2127 is indicated, check for poor connections or loose terminals at APP sensor B and the ECM/PCM, then go to step 1. If any other Temporary DTCs or DTCs are indicated, go to the indicated DTC's troubleshooting.

    NO—Troubleshooting is complete. ■
22. Update the ECM/PCM if it does not have the latest software, or substitute a known-good ECM/PCM (see page 11-6).
23. Check for Temporary DTCs or DTCs with the HDS.

    Are any Temporary DTCs or DTCs indicated?

    YES—If DTC P2127 is indicated, check for poor connections or loose terminals at APP sensor B and the ECM/PCM, then go to step 1. If any other Temporary DTCs or DTCs are indicated, go to the indicated DTC's troubleshooting.

    NO—If the ECM/PCM was updated, troubleshooting is complete. If the ECM/PCM was substituted, replace the original ECM/PCM (see page 11-171). ■

Protected by AR

DTC P2128: APP Sensor B (Throttle Position Sensor E) Circuit High Voltage

1. Turn the ignition switch ON (II).
2. Check APP SENSOR-B in the DATA LIST with the HDS.

   Is there about 4.9 V, or more?

   YES—Go to step 3.

   NO—Intermittent failure, system is OK at this time. Check for poor connections or loose terminals at APP sensor B and at the ECM/PCM. ■
3. Turn the ignition switch OFF.
4. Disconnect the APP sensor 6P connector.
5. Turn the ignition switch ON (II).
6. At the wire harness side, measure voltage between APP sensor 6P connector terminals No. 1 and No. 2.

APP SENSOR 6P CONNECTOR

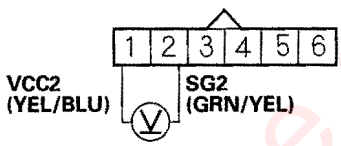

Wire side of female terminals

Is there about 5 V?

YES—Go to step 8.

NO—Go to step 7.

7. Measure voltage between ECM/PCM connector terminals D10 and D12.

ECM/PCM CONNECTOR D (17P)

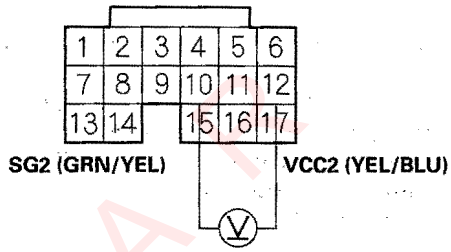

Wire side of female terminals

Is there about 5 V?

YES—Repair open in the wire between the ECM/PCM (D10) and APP sensor B, then go to step 10.

NO—Go to step 14.

8. Turn the ignition switch OFF.
9. Replace the APP sensor (see page 11-216).
10. Turn the ignition switch ON (II).
11. Reset the ECM/PCM with the HDS.
12. Do the ECM/PCM idle learn procedure (see page 11-239).
13. Check for Temporary DTCs or DTCs with the HDS.

    Are any Temporary DTCs or DTCs indicated?

    YES—If DTC P2128 is indicated, check for poor connections or loose terminals at APP sensor B and the ECM/PCM, then go to step 1. If any other Temporary DTCs or DTCs are indicated, go to the indicated DTC's troubleshooting.

    NO—Troubleshooting is complete. ■

(cont'd)

Protected by AR

DTC Troubleshooting (cont'd)

14. Update the ECM/PCM if it does not have the latest software, or substitute a known-good ECM/PCM (see page 11-6).

15. Check for Temporary DTCs or DTCs with the HDS.

    Are any Temporary DTCs or DTCs indicated?

    YES—If DTC P2128 is indicated, check for poor connections or loose terminals at APP sensor B and the ECM/PCM, then go to step 1. If any other Temporary DTCs or DTCs are indicated, go to the indicated DTC's troubleshooting.

    NO—If the ECM/PCM was updated, troubleshooting is complete. If the ECM/PCM was substituted, replace the original ECM/PCM (see page 11-171). ■

Protected by AR

DTC P2138: APP Sensor A/B Incorrect Voltage Correlation

1. Turn the ignition switch ON (II).
2. Clear the DTC with HDS.
3. Press the accelerator pedal to the floor.
4. Check for Temporary DTCs or DTCs with the HDS.

   Is DTC P2138 indicated?

   YES—Go to step 5.

   NO—Intermittent failure, system is OK at this time. Check for poor connections or loose terminals at the APP sensors and at the ECM/PCM. ■
5. Check APP SENSOR-A and APP SENSOR-B in the DATA LIST with the HDS.

   Are they the same voltage?

   YES—Go to step 6.

   NO—Go to step 11.
6. Turn the ignition switch OFF.
7. Jump the SCS line with the HDS.
8. Disconnect the APP sensor 6P connector.
9. Disconnect ECM/PCM connector D (17P).
10. Check for continuity between ECM/PCM connector terminals D3 and D9.

ECM/PCM CONNECTOR D (17P)

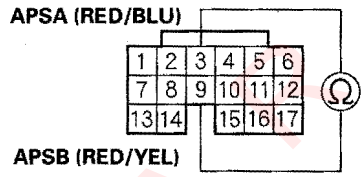

Wire side of female terminals

   Is there continuity?

   YES—Repair short in the wire between the ECM/PCM terminals (D3, D9), then go to step 13.

   NO—Go to step 21.
11. Turn the ignition switch OFF.
12. Replace the APP sensor (see page 11-216).
13. Reconnect ECM/PCM connector D (17P).
14. Turn the ignition switch ON (II).
15. Reset the ECM/PCM with the HDS.
16. Do the ECM/PCM idle learn procedure (see page 11-239).
17. Turn the ignition switch OFF.
18. Turn the ignition switch ON (II).
19. Press the accelerator pedal to the floor.

(cont'd)

Protected by A

DTC Troubleshooting (cont'd)

20. Check for Temporary DTCs or DTCs with the HDS.

    Are any Temporary DTCs or DTCs indicated?

    YES—If DTC P2138 is indicated, check for poor connections or loose terminals at the APP sensor and the ECM/PCM, then go to step 1. If any other Temporary DTCs or DTCs are indicated, go to the indicated DTC's troubleshooting.

    NO—Troubleshooting is complete. ■

21. Update the ECM/PCM if it does not have the latest software, or substitute a known-good ECM/PCM (see page 11-6).

22. Turn the ignition switch OFF.

23. Turn the ignition switch ON (II).

24. Press the accelerator pedal to the floor.

25. Check for Temporary DTCs or DTCs with the HDS.

    Are any Temporary DTCs or DTCs indicated?

    YES—If DTC P2138 is indicated, check for poor connections or loose terminals at the APP sensor and the ECM/PCM, then go to step 1. If any other Temporary DTCs or DTCs are indicated, go to the indicated DTC's troubleshooting.

    NO—If the ECM/PCM was updated, troubleshooting is complete. If the ECM/PCM was substituted, replace the original ECM/PCM (see page 11-171). ■

Protected by AR

DTC P1683: Throttle Valve Default Position Spring Performance Problem

⚠CAUTION

Do not insert your fingers into the installed throttle body when you turn the ignition switch ON (II) or while the ignition switch is ON (II). If you do, there will be serious injury to your fingers if the throttle valve was activated.

1. Turn the ignition switch ON (II).
2. Clear the DTC with the HDS.
3. Start the engine. Hold the engine speed at 3,000 rpm with no load (in Park or neutral) until the radiator fan comes on, then let it idle.
4. Turn the ignition switch OFF, and wait 10 seconds.
5. Turn the ignition switch ON (II).
6. Check for Temporary DTCs or DTCs with the HDS.

   Is DTC P1683 indicated?

   YES—Go to step 7.

   NO—Intermittent failure, system is OK at this time. Check for poor connections or loose terminals at the throttle body and the throttle actuator control module. ■
7. Turn the ignition switch OFF.
8. Disconnect the intake air duct from the throttle body.
9. Push the throttle valve closed as shown.

   NOTE:
   - Do not operate the ignition switch during the check.
   - Be careful not to pinch your fingers during the check.

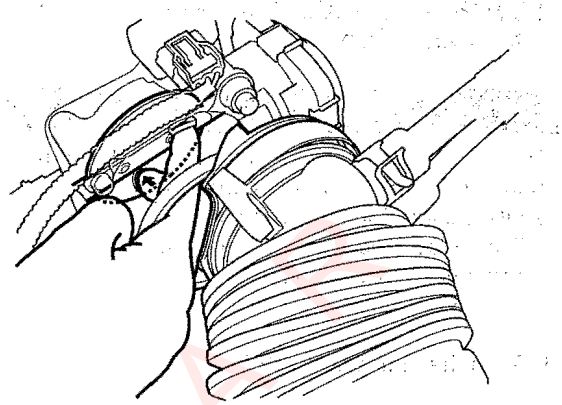

10. Release the throttle valve.

    Does the throttle valve return?

    YES—Clean the throttle body (see page 11-272), then go to step 12.

    NO—Go to step 11.
11. Replace the throttle body (see page 11-277).
12. Turn the ignition switch ON (II).
13. Reset the ECM/PCM with the HDS.
14. Do the ECM/PCM idle learn procedure (see page 11-239).
15. Turn the ignition switch OFF, and wait 10 seconds.
16. Turn the ignition switch ON (II).
17. Check for Temporary DTCs or DTCs with the HDS.

    Are any Temporary DTCs or DTCs indicated?

    YES—If DTC P1683 is indicated, check for poor connections or loose terminals at the throttle body and the throttle actuator control module, then go to step 1. If any other Temporary DTCs or DTCs are indicated, go to the indicated DTC's troubleshooting.

    NO—Troubleshooting is complete. ■

Protected by ...

DTC Troubleshooting (cont'd)

DTC P1684: Throttle Valve Return Spring Performance Problem

⚠CAUTION

Do not insert your fingers into installed throttle body when you turn the ignition switch ON (II) or while the ignition switch is ON (II). Otherwise, you will have serious injury to your fingers if the throttle valve was activated.

1. Turn the ignition switch ON (II).
2. Clear the DTC with the HDS.
3. Start the engine. Hold the engine speed at 3,000 rpm with no load (in Park or neutral) until the radiator fan comes on, then let it idle.
4. Turn the ignition switch OFF, and wait 10 seconds.
5. Turn the ignition switch ON (II).
6. Check for Temporary DTCs or DTCs with the HDS.

   Is DTC P1684 indicated?

   YES—Go to step 7.

   NO—Intermittent failure, system is OK at this time. Check for poor connections or loose terminals at the throttle body and the throttle actuator control module.■
7. Turn the ignition switch OFF.
8. Disconnect the intake air duct from the throttle body.
9. Push the throttle valve open as shown.

   NOTE:
   - Do not operate the ignition switch during the check.
   - Be careful not to pinch your fingers during the check.

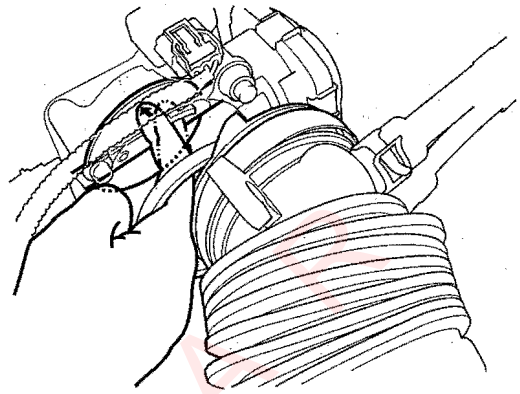

10. Release the throttle valve.

    Does the throttle valve return?

    YES—Clean the throttle body (see page 11-272), then go to step 12.

    NO—Go to step 11.
11. Replace the throttle body (see page 11-277).
12. Turn the ignition switch ON (II).
13. Reset the ECM/PCM with the HDS.
14. Do the ECM/PCM idle learn procedure (see page 11-239).
15. Turn the ignition switch OFF, and wait 10 seconds.
16. Turn the ignition switch ON (II).
17. Check for Temporary DTCs or DTCs with the HDS.

    Are any Temporary DTCs or DTCs indicated?

    YES—If DTC P1684 is indicated, check for poor connections or loose terminals at the throttle body and the throttle actuator control module, then go to step 1. If any other Temporary DTCs or DTCs are indicated, go to the indicated DTC's troubleshooting.

    NO—Troubleshooting is complete.■

Protected by Arc

DTC P2101: Throttle Actuator System Malfunction

1. Record these freeze data:

   - Engine speed
   - Vehicle speed
   - Accelerator position

2. Clear the DTC with the HDS.

3. Do the ETCS TEST in the INSPECTION MENU with the HDS.

4. Check for Temporary DTCs or DTCs with the HDS.

   Is DTC P2101 indicated?

   YES—Go to step 7.

   NO—Go to step 5.

5. Test-drive the vehicle for several minutes in the range of the recorded freeze data.

6. Check for Temporary DTCs or DTCs with the HDS.

   Is DTC P2101 indicated?

   YES—Go to step 7.

   NO—Intermittent failure, system is OK at this time. Check for poor connections or loose terminals at the throttle body and at the throttle actuator control module, then clean the throttle body (see page 11-272).■

7. Turn the ignition switch OFF.

8. Disconnect the intake air duct from the throttle body.

9. Turn the ignition switch ON (II).

10. Clear the DTC with the HDS.

11. Do the ETCS TEST in the INSPECTION MENU with the HDS.

12. Visually check the throttle valve operation.

    NOTE: Be careful not to pinch your fingers during the check.

    Does the throttle valve operate smoothly?

    YES—Clean the throttle body (see page 11-272), then go to step 20 and recheck. If DTC P2101 is indicated, go to step 18.

    NO—Go to step 13.

13. Turn the ignition switch OFF.

14. Disconnect the throttle body 6P connector.

15. Disconnect the throttle actuator control module 16P connector.

16. Connect throttle body 6P connector terminals No. 5 and No. 6 with a jumper wire.

THROTTLE BODY 6P CONNECTOR

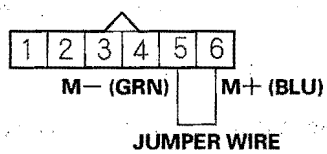

Wire side of female terminals

(cont'd)

Protected by A R

DTC Troubleshooting (cont'd)

17. Check for continuity between throttle actuator control module 16P connector terminals No. 1 and No. 8.

THROTTLE ACTUATOR CONTROL MODULE 16P CONNECTOR

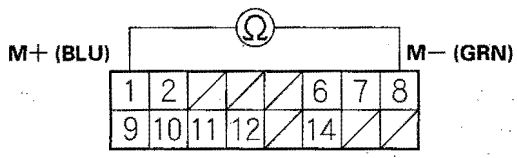

Wire side of female terminals

Is there continuity?

YES—Substitute a known-good throttle actuator control module (see page 11-216), then go to step 20 and recheck. If DTC P2101 is not indicated, replace the original throttle actuator control module (see page 11-216), then go to step 20. If DTC P2101 is indicated, go to step 18.

NO—Repair open in the wires between the throttle body and the throttle actuator control module (motor drive lines), then go to step 20.

18. Turn the ignition switch OFF.
19. Replace the throttle body (see page 11-277).
20. Turn the ignition switch ON (II).
21. Reset the ECM/PCM with the HDS.
22. Do the ECM/PCM idle learn procedure (see page 11-239).
23. Test-drive the vehicle for several minutes in the range of the recorded freeze data.
24. Check for Temporary DTCs or DTCs with the HDS.

Are any Temporary DTCs or DTCs indicated?

YES—If DTC P2101 is indicated, check for poor connections or loose terminals at the throttle body and the throttle actuator control module, then clean the throttle body (see page 11-277), and go to step 1. If any other Temporary DTCs or DTCs are indicated, go to the indicated DTC's troubleshooting.

NO—Troubleshooting is complete. ■

Protected by Ar

DTC P2108: Throttle Actuator Control Module Problem

1. Turn the ignition switch ON (II).
2. Clear the DTC with the HDS.
3. Turn the ignition switch OFF.
4. Turn the ignition switch ON (II).
5. Check for Temporary DTCs or DTCs with the HDS.

   Is DTC P2108 indicated?

   YES—Substitute a known-good throttle actuator control module (see page 11-216), and recheck. If DTC P2108 is not indicated, replace the original throttle actuator control module (see page 11-216).■

   NO—Intermittent failure, system is OK at this time. Check for poor connections or loose terminals at the throttle body, the throttle actuator control module, and the ECM/PCM.■

Protected by AR

DTC Troubleshooting (cont'd)

DTC P2118: Throttle Actuator Current Range/ Performance Problem

1. Disconnect the throttle actuator control module 16P connector.
2. Measure resistance between throttle actuator control module 16P connector terminals No. 1 and No. 8.

THROTTLE ACTUATOR CONTROL MODULE 16P CONNECTOR

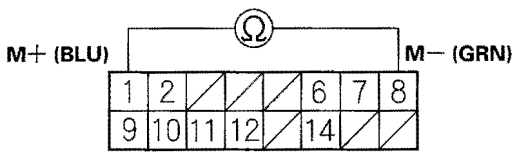

Wire side of female terminals

Is there about 1.0 Ω or less?

YES—Go to step 3.

NO—Substitute a known-good throttle actuator control module (see page 11-216), then go to step 7 and recheck. If DTC P2118 is not indicated, replace the original throttle actuator control module (see page 11-216), then go to step 7.

3. Disconnect the throttle body 6P connector.
4. At the throttle body side, measure resistance between throttle body 6P connector terminals No. 5 and No. 6 with the throttle fully closed.

THROTTLE BODY 6P CONNECTOR

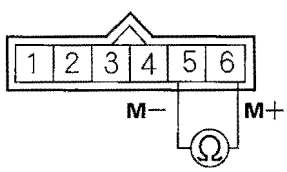

Terminal side of male terminals

Is there about 1.0 Ω or less?

YES—Go to step 5.

NO—Repair short in the wires between the throttle body and throttle actuator control module (motor drive lines), then go to step 6.

5. Replace the throttle body (see page 11-277).
6. Reconnect the throttle body 6P connector.
7. Reconnect the throttle actuator control module 16P connector.
8. Turn the ignition switch ON (II).
9. Reset the ECM/PCM with the HDS.
10. Do the ECM/PCM idle learn procedure (see page 11-239).
11. Turn the ignition switch OFF.
12. Turn the ignition switch ON (II).
13. Slowly press the accelerator pedal to the floor.
14. Check for Temporary DTCs or DTCs with the HDS.

Are any Temporary DTCs or DTCs indicated?

YES—If DTC P2118 is indicated, check for poor connections or loose terminals at the throttle body and the throttle actuator control module, then go to step 1. If any other Temporary DTCs or DTCs are indicated, go to the indicated DTC's troubleshooting.

NO—Troubleshooting is complete. ■

Protected by AR

DTC P2176: Throttle Actuator Control System Idle Position Not Learned

NOTE: If DTC P2135 is stored at the same time as DTC P2176, troubleshoot DTC P2135 first, then recheck for DTC P2176.

1. Turn the ignition switch ON (II).
2. Clear the DTC with the HDS.
3. Turn the ignition switch OFF.
4. Turn the ignition switch ON (II), and wait 10 seconds.
5. Check for Temporary DTCs or DTCs with the HDS.

   Is DTC P2176 indicated?

   YES—Go to step 6.

   NO—Intermittent failure, system is OK at this time. Check for poor connections or loose terminals at the throttle body and the throttle actuator control module, then clean the throttle body (see page 11-272).■
6. Turn the ignition switch OFF.
7. Disconnect the intake air duct from the throttle body.
8. Turn the ignition switch ON (II).
9. Clear the DTC with the HDS.
10. Do the ETCS TEST in the INSPECTION MENU with the HDS.
11. Visually check the throttle valve operation.

    NOTE: Be careful not to pinch your fingers. Keep your hands away from the throttle valve.

    Does the throttle valve move to its fully closed position?

    YES—Go to step 12.

    NO—Go to step 13.
12. Check for sludge or carbon on the throttle valve.

    Is there sludge or carbon on the throttle valve?

    YES—Clean the throttle body (see page 11-272), then go to step 21 and recheck.

    NO—Go to step 18.
13. Turn the ignition switch OFF.
14. Disconnect the throttle body 6P connector.
15. Disconnect the throttle actuator control module 16P connector.
16. Connect throttle body 6P connector terminals No. 5 and No. 6 with a jumper wire.

THROTTLE BODY 6P CONNECTOR

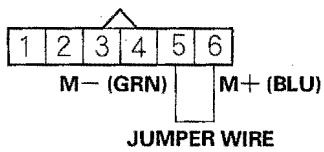

Wire side of female terminals

(cont'd)

Protected by AR

DTC Troubleshooting (cont'd)

17. Check for continuity between throttle actuator control module 16P connector terminals No. 1 and No. 8.

THROTTLE ACTUATOR CONTROL MODULE 16P CONNECTOR

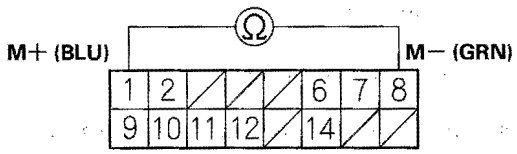

Wire side of female terminals

Is there continuity?

YES—Substitute a known-good throttle actuator control module (see page 11-216), then go to step 20 and recheck. If DTC P2176 is not indicated, replace the original throttle actuator control module (see page 11-216), then go to step 20.

NO—Repair open in the wires between the throttle body and the throttle actuator control module (motor drive lines), then go to step 20.

18. Turn the ignition switch OFF.
19. Replace the throttle body (see page 11-277).
20. Turn the ignition switch ON (II).
21. Reset the ECM/PCM with the HDS.
22. Do the ECM/PCM idle learn procedure (see page 11-239).
23. Turn the ignition switch OFF.
24. Turn the ignition switch ON (II), and wait 10 seconds.
25. Check for Temporary DTCs or DTCs with the HDS.

Are any Temporary DTCs or DTCs indicated?

YES—If DTC P2176 is indicated, check for poor connections or loose terminals at the throttle body and the throttle actuator control module, then clean the throttle body (see page 11-272), and go to step 1. If any other Temporary DTCs or DTCs are indicated, go to the indicated DTC's troubleshooting.

NO—Troubleshooting is complete. ■

Protected by AP

DTC P2552: Throttle Actuator Control Module Relay Malfunction

1. Turn the ignition switch ON (II).
2. Clear the DTC with the HDS.
3. Do the ETCS TEST in the INSPECTION MENU with the HDS.

   Is the RELAY Circuit OK?

   YES—Intermittent failure, system is OK at this time. Check for poor connections or loose terminals at the throttle actuator control module relay, the throttle actuator control module, and at the ECM/PCM. ■

   NO—Go to step 4.
4. Turn the ignition switch OFF.
5. Jump the SCS line with the HDS.
6. Remove the throttle actuator control module relay (A).

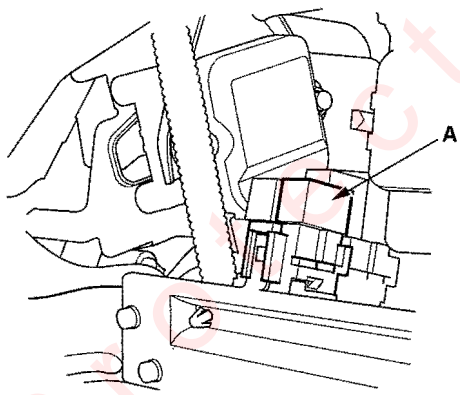

7. Disconnect ECM/PCM connector A (31P).
8. Check for continuity between ECM/PCM connector terminal A3 and body ground.

ECM/PCM CONECTOR A (31P)

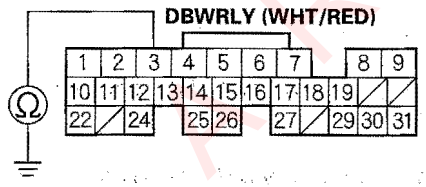

Wire side of female terminals

Is there continuity?

YES—Repair short in the wire between the throttle actuator control module relay and ECM/PCM (A3), then go to step 10.

NO—Go to step 9.

9. Test the throttle actuator control module relay (see page 22-75).

   Is the relay OK?

   YES—Go to step 17.

   NO—Replace the throttle actuator control module relay, then go to step 10.

(cont'd)

Protected by AR

DTC Troubleshooting (cont'd)

10. Reconnect ECM/PCM connectors A (31P).
11. Turn the ignition switch ON (II).
12. Reset the ECM/PCM with the HDS.
13. Do the ECM/PCM idle learn procedure (see page 11-239).
14. Turn the ignition switch OFF.
15. Turn the ignition switch ON (II), and wait 10 seconds.
16. Check for Temporary DTCs or DTCs with the HDS.

    Are any Temporary DTCs or DTCs indicated?

    YES—If DTC P2552 is indicated, check for poor connections or loose terminals at the throttle actuator control module relay, the throttle actuator control module, and the ECM/PCM, then go to step 1. If any other Temporary DTCs or DTCs are indicated, go to the indicated DTC's troubleshooting.

    NO—Troubleshooting is complete.■
17. Update the ECM/PCM if it does not have the latest software, or substitute a known-good ECM/PCM (see page 11-6).
18. Check for Temporary DTCs or DTCs with the HDS.

    Are any Temporary DTCs or DTCs indicated?

    YES—If DTC P2552 is indicated, check for poor connections or loose terminals at the throttle actuator control module relay, the throttle actuator control module, and the ECM/PCM, then go to step 1. If any other Temporary DTCs or DTCs are indicated, go to the indicated DTC's troubleshooting.

    NO—If the ECM/PCM was updated, troubleshooting is completed. If the ECM/PCM was substituted, replace the original ECM/PCM (see page 11-171).■

Protected by AR

DTC U0107: Lost Communication With Throttle Actuator Control Module

1. Turn the ignition switch ON (II).
2. Clear the DTC with the HDS.
3. Check for Temporary DTCs or DTCs with the HDS.

   Is DTC U0107 indicated?

   YES—Check for poor connections or loose terminals at the throttle body, the throttle actuator control module and the ECM/PCM, then go to step 50. If the connections are OK, go to step 6.

   NO—Go to step 4.
4. Start the engine.
5. Check for Temporary DTCs or DTCs with the HDS.

   Is DTC U0107 indicated?

   YES—Go to step 46.

   NO—Intermittent failure, system is OK at this time. Check for poor connections or loose terminals at the throttle body, the throttle actuator control module relay, the throttle actuator control module, and the ECM/PCM. ■
6. Clear the DTC with the HDS.
7. Turn the ignition switch OFF.
8. Disconnect the intake air duct from the throttle body.
9. Press the accelerator pedal to the floor.
10. Turn the ignition switch ON (II).
11. Check the throttle valve operation.

    Does it open after the throttle valve closes?

    YES—Go to step 12.

    NO—Go to step 13.
12. Check the throttle valve again.

    Does the throttle valve open fully?

    YES—Go to step 40.

    NO—Go to step 34.
13. Turn the ignition switch OFF.
14. Disconnect the throttle actuator control module 16P connector.
15. Check for continuity between throttle actuator control module 16P connector terminal No. 7 and body ground.

THROTTLE ACTUATOR CONTROL MODULE 16P CONNECTOR

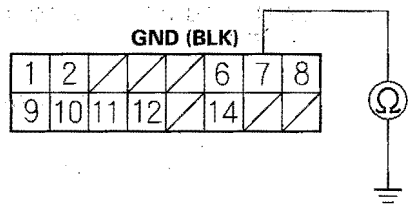

Wire side of female terminals

Is there continuity?

YES—Go to step 16.

NO—Repair open in the wire between the throttle actuator control module and G101, then go to step 50.

(cont'd)

Protected by AR

DTC Troubleshooting (cont'd)

16. Remove the throttle actuator control module relay (A).

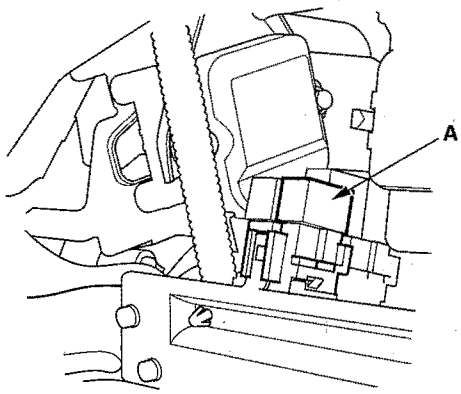

17. Measure voltage between throttle actuator control module relay terminal No. 1 and body ground.

THROTTLE ACTUATOR CONTROL RELAY 4P CONNECTOR

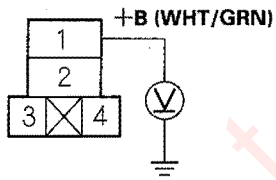

Wire side of female terminals

Is there battery voltage?

YES—Go to step 19.

NO—Go to step 18.

18. Check the No. 1 DBW (THROTTLE ACTUATOR CONTROL) (15A) fuse in under-dash fuse/relay box.

Is the fuse OK?

YES—Repair open in the wire between the throttle actuator control module relay (+B line) and the No. 1 DBW (THROTTLE ACTUATOR CONTROL) (15A) fuse, then go to step 50.

NO—Repair short in the wire between the throttle actuator control module relay (+B line) and the No. 1 DBW (THROTTLE ACTUATOR CONTROL) (15A) fuse, then go to step 50.

19. Install the throttle actuator control module relay.

20. Turn the ignition switch ON (II).

21. Measure voltage between throttle actuator control module 16P connector terminal No. 2 and body ground.

THROTTLE ACTUATOR CONTROL MODULE 16P CONNECTOR

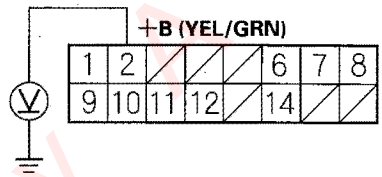

Wire side of female terminals

Is there battery voltage for about 2 seconds?

YES—Substitute a known-good throttle actuator control module (see page 11-216), then go to step 50 and recheck. If DTC U0107 is not indicated, replace the original throttle actuator control module (see page 11-216), then go to step 50.

NO—Go to step 23.

22. Turn the ignition switch OFF.

23. Remove the throttle actuator control module relay (A).

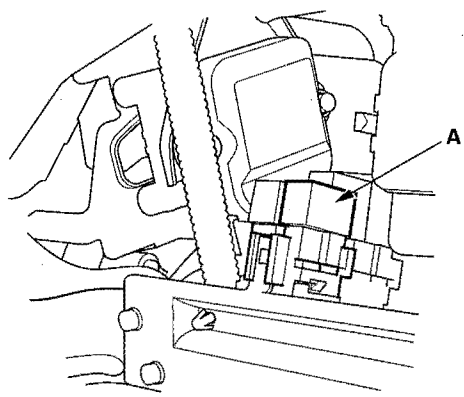

Protected by

24. Check the throttle actuator control module relay (see page 22-75).

Is the throttle actuator control module relay OK?

YES—Go to step 25.

NO—Replace the throttle actuator control module relay, then go to step 50.

25. Turn the ignition switch ON (II).

26. Measure voltage between throttle actuator control module relay terminal No.4 and body ground.

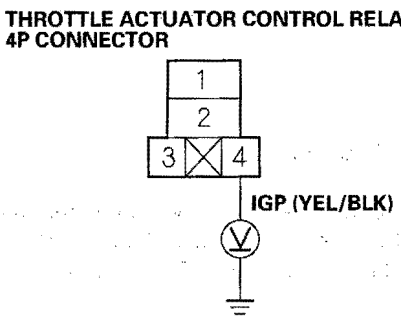

Wire side of female terminals

Is there battery voltage?

YES—Go to step 27.

NO—Repair open in the wire between the throttle actuator control module relay and PGM-FI main relay 1 (FI MAIN), then go to step 50.

27. Turn the ignition switch OFF.

28. Jump the SCS line with the HDS.

29. Disconnect ECM/PCM connector A (31P).

30. Check for continuity between ECM/PCM connector terminal A3 and throttle actuator control module relay terminal No. 3.

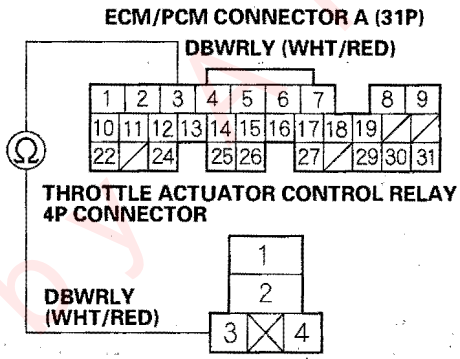

Wire side of female terminals

Is there continuity?

YES—Go to step 31.

NO—Repair open in the wire between the ECM/PCM (A3) and the throttle actuator control module relay, then go to step 50.

(cont'd)

Protected by

DTC Troubleshooting (cont'd)

31. Check for continuity between throttle actuator control module 16P connector terminal No. 2 and body ground.

THROTTLE ACTUATOR CONTROL MODULE 16P CONNECTOR

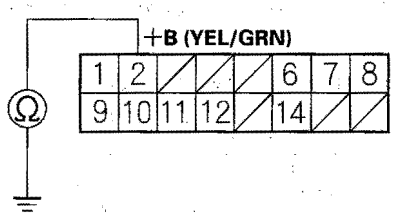

Wire side of female terminals

Is there continuity?

YES—Repair short in the wire between the throttle actuator control module and the throttle actuator control module relay (+B line), then go to step 50.

NO—Go to step 32.

32. Connect throttle actuator control module relay terminal No. 2 to body ground with a jumper wire.

THROTTLE ACTUATOR CONTROL RELAY 4P CONNECTOR

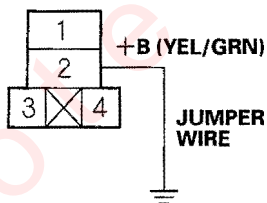

Wire side of female terminals

33. Check for continuity between throttle actuator control module 16P connector terminal No. 2 and body ground.

THROTTLE ACTUATOR CONTROL MODULE 16P CONNECTOR

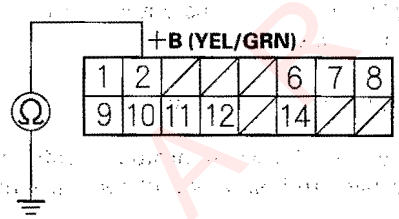

Wire side of female terminals

Is there continuity?

YES—Go to step 56.

NO—Repair open in the wire between the throttle actuator control module and the throttle actuator control module relay (+B line), then go to step 50.

Protected by AP

34. Turn the ignition switch OFF.

35. Jump the SCS line with the HDS.

36. Disconnect the throttle actuator control module 16P connector.

37. Disconnect ECM/PCM connector E (31P).

38. Check for continuity between ECM/PCM connector terminal E25 and body ground.

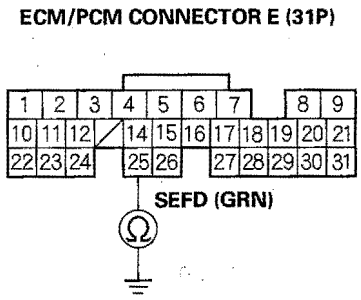

Wire side of female terminals

Is there continuity?

YES—Repair short in the wire between the ECM/PCM (E25) and the throttle actuator control module, then go to step 50.

NO—Go to step 39.

39. Check for continuity between ECM/PCM connector terminal E25 and throttle actuator control module 16P connector terminals No. 6.

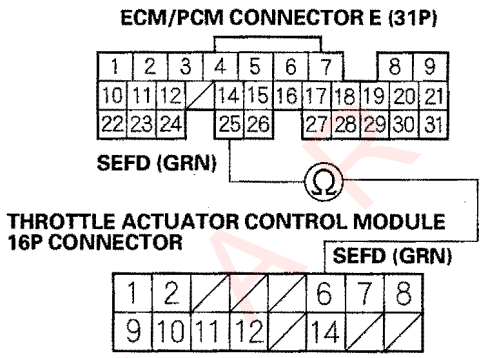

Wire side of female terminals

Is there continuity?

YES—Substitute a known-good throttle actuator control module (see page 11-216), then go to step 50 and recheck. If DTC U0107 is not indicated, replace the original throttle actuator control module (see page 11-216), then go to step 50. If DTC U0107 is indicated, then go to step 56.

NO—Repair open in the wire between the ECM/PCM (E25) and the throttle actuator control module, then go to step 50.

(cont'd)

Protected by MR

DTC Troubleshooting (cont'd)

40. Turn the ignition switch OFF.
41. Jump the SCS line with the HDS.
42. Disconnect the throttle actuator control module 16P connector.
43. Disconnect ECM/PCM connector E (31P).
44. Check for continuity between ECM/PCM connector terminal E26 and body ground.

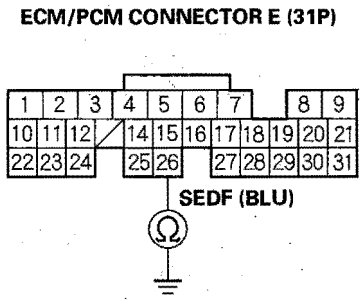

Wire side of female terminals

Is there continuity?

YES—Repair short in the wire between the ECM/PCM (E26) and the throttle actuator control module, then go to step 50.

NO—Go to step 45.

45. Check for continuity between ECM/PCM connector terminal E26 and throttle actuator control module 16P connector terminal No. 14.

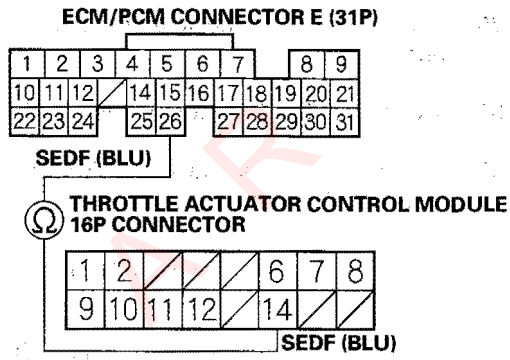

Wire side of female terminals

Is there continuity?

YES—Substitute a known-good throttle actuator control module (see page 11-216), then go to step 50 and recheck. If DTC U0107 is not indicated, replace the original throttle actuator control module (see page 11-216), then go to step 50. If DTC U0107 is indicated, then go to step 56.

NO—Repair open in the wire between the ECM/PCM (E26) and the throttle actuator control module, then go to step 50.

Protected by FSR

46. Turn the ignition switch OFF.

47. Jump the SCS line with the HDS.

48. Disconnect ECM/PCM connector B (24P) and E (31P).

49. Check for continuity between body ground and ECM/PCM connector terminals B15 and E3 individually.

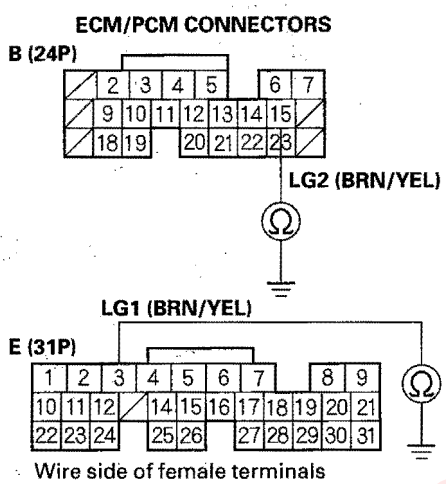

Is there continuity?

YES—Check for poor connections or loose terminals at the throttle body, the throttle actuator control module relay, the throttle actuator control module, and the ECM/PCM, then go to step 1.

NO—Repair open in the wire between the ECM/PCM (B15, E3) and G101, then go to step 50.

50. Turn the ignition switch OFF.

51. Reconnect all connectors.

52. Turn the ignition switch ON (II).

53. Reset the ECM/PCM with the HDS.

54. Do the ECM/PCM idle learn procedure (see page 11-239).

55. Check for Temporary DTCs or DTCs with the HDS.

Are any Temporary DTCs or DTCs indicated?

YES—If DTC U0107 is indicated, check for poor connections or loose terminals at the throttle body, the throttle actuator control module relay, the throttle actuator control module, and the ECM/PCM, then go to step 1. If any other Temporary DTCs or DTCs are indicated, go to the indicated DTC's troubleshooting.

NO—Troubleshooting is complete.■

56. Update the ECM/PCM if it does not have the latest software, or substitute a known-good ECM/PCM (see page 11-6).

57. Check for Temporary DTCs or DTCs with the HDS.

Are any Temporary DTCs or DTCs indicated?

YES—If DTC U0107 is indicated, check for poor connections or loose terminals at the throttle body, the throttle actuator control module relay, the throttle actuator control module, and the ECM/PCM, then go to step 1. If any other Temporary DTCs or DTCs are indicated, go to the indicated DTC's troubleshooting.

NO—If the ECM/PCM was updated, troubleshooting is complete. If the ECM/PCM was substituted, replace the original ECM/PCM (see page 11-171).■

Protected by AR

APP Sensor Replacement

1. Remove the throttle cable (see page 11-276).
2. Disconnect the accelerator pedal position (APP) sensor 6P connector (A).

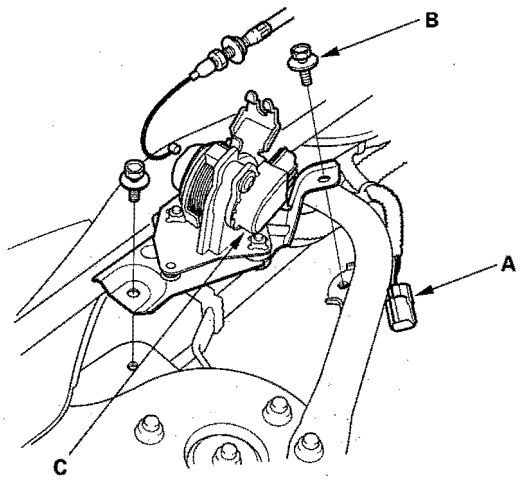

3. Remove the bolts (B), and the APP sensor (C).
4. Install the sensor in the reverse order of removal.

Throttle Actuator Control Module Replacement

1. Remove the glove box and panel (see page 20-85).
2. Disconnect the throttle actuator control module 16P connector (A).

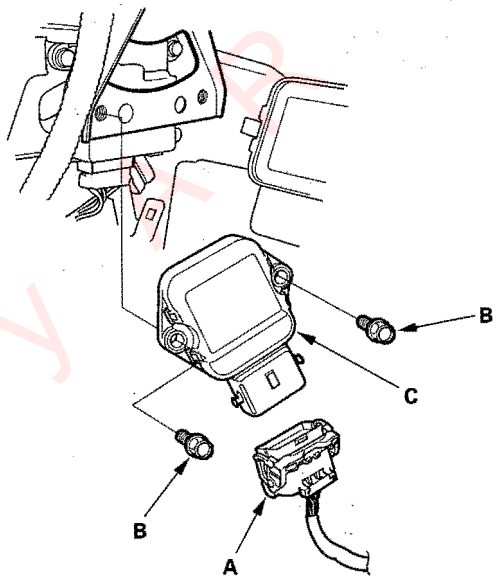

3. Remove the bolts (B), and the throttle actuator control module (C).
4. Install the control module in the reverse order of removal.

Protected by

Component Location Index

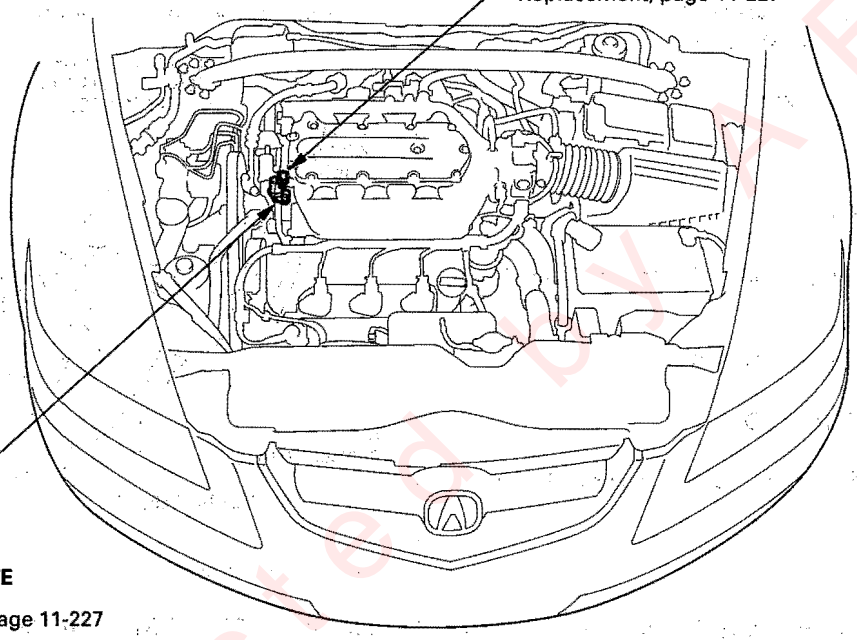

Protected by AR

DTC Troubleshooting

DTC P2646: VTEC Oil Pressure Switch Circuit Low Voltage

Special Tools Required
- Pressure gauge adapter 07NAJ-P07010A
- A/T low pressure gauge w/panel 07406-0070300
- A/T pressure hose 07406-0020201
- A/T pressure hose, 2,210 mm 07MAJ-PY4011A
- A/T pressure adapter 07MAJ-PY40120
- Oil pressure hose 07ZAJ-S5A0200

1. Check the engine oil level.

   Is the level OK?

   YES—Go to step 2.

   NO—Adjust the engine oil to the proper level, then go to step 21.

2. Turn the ignition switch ON (II).
3. Clear the DTC with the HDS.
4. Do the VTEC TEST in the INSPECTION MENU with the HDS.

   Is the result OK?

   YES—Intermittent failure, system is OK at this time. Check for poor connections or loose terminals at the VTEC oil pressure switch, the VTEC solenoid valve and the ECM/PCM.■

   NO—Go to step 5.

5. Turn the ignition switch OFF.
6. Disconnect the VTEC oil pressure switch 2P connector.
7. Turn the ignition switch ON (II).
8. Check the VTEC PRES SW in the DATA LIST with the HDS.

   Is ON indicated?

   YES—Go to step 14.

   NO—Go to step 9.

9. Turn the ignition switch OFF.
10. Remove the VTEC oil pressure switch (A) and install the special tools as shown, then install the VTEC oil pressure switch (A) to the oil pressure gauge adapter (B).

    NOTE: Install the switch in the reverse order of removal with a new O-ring.

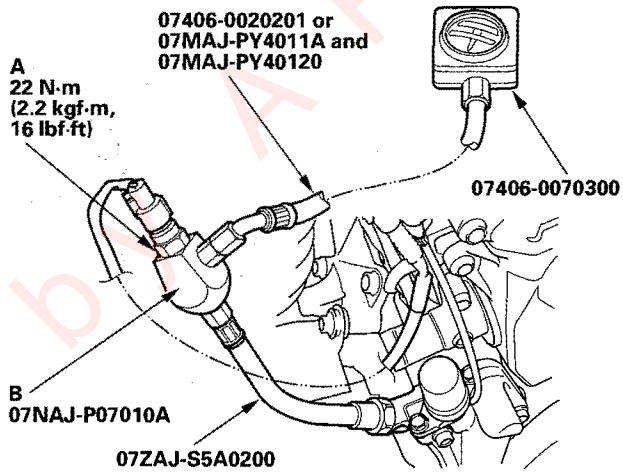

11. Start the engine.
12. Do the VTEC TEST in the INSPECTION MENU with the HDS.
13. Check the oil pressure.

    Does the oil pressure increase to 392 kpa (4.0 kgf/cm², 56.9psi)?

    YES—Replace the VTEC oil pressure switch (see page 11-227), then go to step 21.

    NO—Inspect the VTEC system. If it is OK. Replace the VTEC solenoid valve (see page 11-227), then go to step 21.

14. Turn the ignition switch OFF.
15. Jump the SCS line with the HDS.
16. Disconnect the VTEC oil pressure switch 2P connector.
17. Disconnect ECM/PCM connector E (31P).

Protected by AR

18. Check for continuity between ECM/PCM connector terminal E23 and body ground.

ECM/PCM CONNECTOR E (31P)

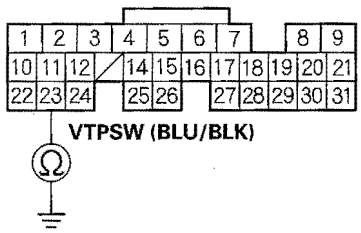

Wire side of female terminals

Is there continuity?

YES—Repair short in the wire between the ECM/PCM (E23) and the VTEC oil pressure switch, then go to step 19.

NO—Go to step 27.

19. Reconnect the VTEC oil pressure switch 2P connector.

20. Reconnect ECM/PCM connector E (31P).

21. Turn the ignition switch ON (II).

22. Reset the ECM/PCM with the HDS.

23. Do the ECM/PCM idle learn procedure (see page 11-239).

24. Do the VTEC TEST in the INSPECTION MENU with the HDS.

25. Check for Temporary DTCs or DTCs with the HDS.

Are any Temporary DTCs or DTCs indicated?

YES—If DTC P2646 is indicated, check for poor connections or loose terminals at the VTEC oil pressure switch, the VTEC solenoid valve, and the ECM/PCM, then go to step 1. If any other Temporary DTCs or DTCs are indicated, go to the indicated DTC's troubleshooting.

NO—Go to step 26.

26. Monitor the OBD STATUS for DTC P2646 in the DTCs MENU with the HDS.

Does the screen indicate PASSED?

YES—Troubleshooting is complete. ■

NO—If the screen indicates FAILED, go to step 1 and recheck. If the screen indicates NOT COMPLETED, go to step 24 and recheck.

27. Update the ECM/PCM if it does not have the latest software, or substitute a known-good ECM/PCM (see page 11-6).

28. Do the VTEC TEST in the INSPECTION MENU with the HDS.

29. Check for Temporary DTCs or DTCs with the HDS.

Are any Temporary DTCs or DTCs indicated?

YES—If DTC P2646 is indicated, check for poor connections or loose terminals at the VTEC oil pressure switch, the VTEC solenoid valve, and the ECM/PCM then go to step 1. If any other Temporary DTCs or DTCs are indicated, go to the indicated DTC's troubleshooting.

NO—If the ECM/PCM was updated, troubleshooting is completed. If the ECM/PCM was substituted, replace the original ECM/PCM (see page 11-171). ■

Protected by AP

DTC Troubleshooting (cont'd)

DTC P2647: VTEC Oil Pressure Switch Circuit High Voltage

1. Check the engine oil level.

   Is the level OK?

   YES—Go to step 2.

   NO—Adjust the engine oil to the proper level, then go to step 14.

2. Turn the ignition switch ON (II).

3. Clear the DTC with the HDS.

4. Do the VTEC TEST in the INSPECTION MENU with the HDS.

   Is the result OK?

   YES—Intermittent failure, sytem is OK at this time. Check for poor connections or loose terminals at the VTEC oil pressure switch and the ECM/PCM. ■

   NO—Go to step 5.

5. Check the result of step 4.

   - VTEC Switch Failure
   - VTEC Switch Open
   - VTEC Switch SIG Line Open
   - VTEC Switch GND Line Open

   Is the test result one of the above?

   YES—Go to step 6.

   NO—Check for poor connections or loose terminals at the VTEC oil pressure switch. If it is OK, replace the VTEC solenoid valve (see page 11-227), then go to step 14.

6. Turn the ignition switch OFF.

7. Disconnect the VTEC oil pressure switch 2P connector.

8. At the VTEC oil pressure switch, check for continuity between VTEC oil pressure switch terminals No. 1 and No. 2.

VTEC OIL PRESSURE SWITCH 2P CONNECTOR

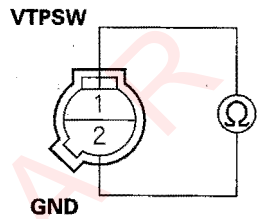

Terminal side of male terminals

Is there continuity?

YES—Go to step 9.

NO—Replace the VTEC oil pressure switch (see page 11-227), then go to step 13.

9. Turn the ignition switch ON (II).

10. Measure voltage between VTEC oil pressure switch terminal No. 1 and body ground.

VTEC OIL PRESSURE SWITCH 2P CONNECTOR

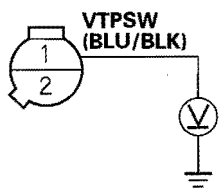

Wire side of female terminals

Is there battery voltage?

YES—Repair open in the wire between the VTEC oil pressure switch and G101, then go to step 13.

NO—Go to step 11.

Protected by AR

11. Measure voltage between ECM/PCM connector terminal E23 and body ground.

ECM/PCM CONNECTOR E (31P)

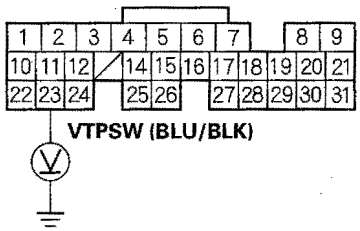

Wire side of female terminals

Is there battery voltage?

YES—Repair open in the wire between the ECM/PCM (E23) and the VTEC oil pressure switch, then go to step 12.

NO—Go to step 19.

12. Turn the ignition switch OFF.

13. Reconnect the VTEC oil pressure switch 2P connector.

14. Turn the ignition switch ON (II).

15. Reset the ECM/PCM with the HDS.

16. Do the ECM/PCM idle learn procedure (see page 11-239).

17. Check for Temporary DTCs or DTCs with the HDS.

Are any Temporary DTCs or DTCs indicated?

YES—If DTC P2647 is indicated, check for poor connections or loose terminals at the VTEC oil pressure switch and the ECM/PCM, then go to step 1. If any other Temporary DTCs or DTCs are indicated, go to the indicated DTC's troubleshooting.

NO—Go to step 18.

18. Monitor the OBD STATUS for DTC P2647 in the DTCs MENU with the HDS.

Does the screen indicate PASSED?

YES—Troubleshooting is complete.■

NO—If the screen indicates FAILED, go to step 1 and recheck. If the screen indicates NOT COMPLETED, go to step 16, and recheck.

19. Update the ECM/PCM if it does not have the latest software, or substitute a known-good ECM/PCM (see page 11-6).

20. Check for Temporary DTCs or DTCs with the HDS.

Are any Temporary DTCs or DTCs indicated?

YES—If DTC P2647 is indicated, check for poor connections or loose terminals at the VTEC oil pressure switch and the ECM/PCM, then go to step 1. If any other Temporary DTCs or DTCs are indicated, go to the indicated DTC's troubleshooting.

NO—If the ECM/PCM was updated, troubleshooting is complete. If the ECM/PCM was substituted, replace the original ECM/PCM (see page 11-171).■

Protected by ARP

DTC Troubleshooting (cont'd)

DTC P2648: VTEC Solenoid Valve Circuit Low Voltage

1. Turn the ignition switch ON (II).
2. Clear the DTC with the HDS.
3. Do the VTEC TEST in the INSPECTION MENU with the HDS.

   Is the result OK?

   YES—Intermittent failure, system is OK at this time. Check for poor connections or loose terminals at the VTEC solenoid valve and the ECM/PCM. ■

   NO—Go to step 4.
4. Turn the ignition switch OFF.
5. Disconnect the VTEC solenoid valve 1P connector.
6. Measure resistance between the VTEC solenoid valve 1P connector terminal and the solenoid valve body.

VTEC SOLENOID VALVE 1P CONNECTOR



Terminal side of male terminals

Is there 14—30 Ω ?

YES—Go to step 7.

NO—Go to step 10.

7. Jump the SCS line with the HDS.
8. Disconnect ECM/PCM connector E (31P).
9. Check for continuity between ECM/PCM connector terminal E22 and body ground.

ECM/PCM CONNECTOR E (31P)

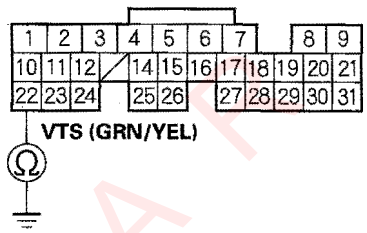

Wire side of female terminals

Is there continuity?

YES—Repair short in the wire between the ECM/PCM (E22) and the VTEC solenoid valve, then go to step 11.

NO—Go to step 18.

10. Replace the VTEC solenoid valve (see page 11-227).
11. Reconnect all connectors.
12. Turn the ignition switch ON (II).
13. Reset the ECM/PCM with the HDS.
14. Do the ECM/PCM idle learn procedure (see page 11-239).
15. Do the VTEC TEST in the INSPECTION MENU with the HDS.
16. Check for Temporary DTCs or DTCs with the HDS.

    Are any Temporary DTCs or DTCs indicated?

    YES—If DTC P2648 is indicated, check for poor connections or loose terminals at the VTEC solenoid valve and the ECM/PCM, then go to step 1. If any other Temporary DTCs or DTCs are indicated, go to the indicated DTC's troubleshooting.

    NO—Go to step 17.

Protected by AP

17. Monitor the OBD STATUS for DTC P2648 in the DTCs MENU with the HDS.

    Does the screen indicate PASSED?

    YES—Troubleshooting is complete. ■

    NO—If the screen indicates FAILED, go to step 1 and recheck. If the screen indicates NOT COMPLETED, go to step 15 and recheck.

18. Update the ECM/PCM if it does not have the latest software, or substitute a known-good ECM/PCM (see page 11-6).

19. Do the VTEC TEST in the INSPECTION MENU with the HDS.

20. Check for Temporary DTCs or DTCs with the HDS.

    Are any Temporary DTCs or DTCs indicated?

    YES—If DTC P2648 is indicated, check for poor connections or loose terminals at the VTEC solenoid valve and the ECM/PCM, then go to step 1. If any other Temporary DTCs or DTCs are indicated, go to the indicated DTC's troubleshooting.

    NO—If the ECM/PCM was updated, troubleshooting is complete. If the ECM/PCM was substituted, replace the original ECM/PCM (see page 11-171). ■

Protected by AR

DTC Troubleshooting (cont'd)

DTC P2649: VTEC Solenoid Valve Circuit High Voltage

1. Turn the ignition switch ON (II).
2. Clear the DTC with the HDS.
3. Start the engine. Hold the engine speed at 3,000 rpm with no load (in Park or neutral) until the radiator fan comes on, then let it idle.
4. Check for Temporary DTCs or DTCs with the HDS.

   Is DTC P2649 indicated?

   YES—Go to step 5.

   NO—Intermittent failure, system is OK at this time. Check for poor connections or loose terminals at the VTEC solenoid valve and the ECM/PCM. ■
5. Turn the ignition switch OFF.
6. Disconnect the VTEC solenoid valve 1P connector.
7. Measure resistance between the VTEC solenoid valve 1P connector terminal and the solenoid valve body.

VTEC SOLENOID VALVE 1P CONNECTOR



Terminal side of male terminals

Is there 14—30 Ω ?

YES—Go to step 8.

NO—Go to step 12.

8. Jump the SCS line with the HDS.
9. Disconnect ECM/PCM connector E (31P).
10. Connect the VTEC solenoid valve 1P connector terminal to body ground with a jumper wire.

VTEC SOLENOID VALVE 1P CONNECTOR

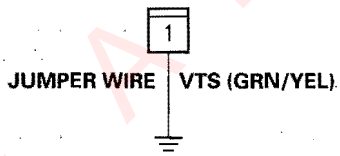

Wire side of female terminals

11. Check for continuity between ECM/PCM connector terminal E22 and body ground.

ECM/PCM CONNECTOR E (31P)

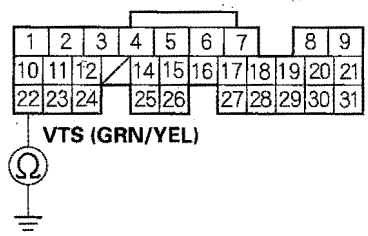

Wire side of female terminals

Is there continuity?

YES—Go to step 20.

NO—Repair open in the wire between the ECM/PCM (E22) and the VTEC solenoid valve, then go to step 13.

Protected by AR

12. Replace the VTEC solenoid valve (see page 11-227).

13. Reconnect all connectors.

14. Turn the ignition switch ON (II).

15. Reset the ECM/PCM with the HDS.

16. Do the ECM/PCM idle learn procedure (see page 11-239).

17. Start the engine. Hold the engine speed at 3,000 rpm with no load (in Park or neutral) until the radiator fan comes on, then let it idle.

18. Check for Temporary DTCs or DTCs with the HDS.

    Are any Temporary DTCs or DTCs indicated?

    YES—If DTC P2649 is indicated, check for poor connections or loose terminals at the VTEC solenoid valve and the ECM/PCM, then go to step 1. If any other Temporary DTCs or DTCs are indicated, go to the indicated DTC's troubleshooting.

    NO—Go to step 19.

19. Monitor the OBD STATUS for DTC P2649 in the DTCs MENU with the HDS.

    Does the screen indicate PASSED?

    YES—Troubleshooting is complete.■

    NO—If the screen indicates FAILED, go to step 1 and recheck. If the screen indicates NOT COMPLETED, go to step 17 and recheck.

20. Update the ECM/PCM if it does not have the latest software, or substitute a known-good ECM/PCM (see page 11-6).

21. Check for Temporary DTCs or DTCs with the HDS.

    Are any Temporary DTCs or DTCs indicated?

    YES—If DTC P2649 is indicated, check for poor connections or loose terminals at the VTEC solenoid valve and the ECM/PCM, then go to step 1. If any other Temporary DTCs or DTCs are indicated, go to the indicated DTC's troubleshooting.

    NO—If the ECM/PCM was updated, troubleshooting is completed. If the ECM/PCM was substituted, replace the original ECM/PCM (see page 11-171).■

Protected by A

VTEC Solenoid Valve Test

1. Disconnect the VTEC solenoid valve connector.

2. Measure resistance between the VTEC solenoid valve 1P connector terminal No. 1 (A) and body ground.

   - If the resistance is as specified, go to step 3.
   - If the resistance is not as specified, replace the VTEC solenoid valve.

   Resistance: 14—30 Ω

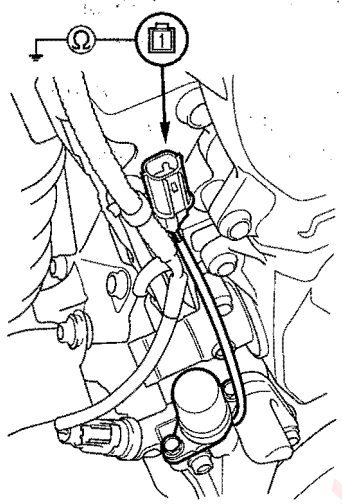

3. Remove the VTEC solenoid valve/oil filter assembly (A) from the oil pump, and check the VTEC solenoid valve filter (B) for a restriction. If there is a restriction, replace the VTEC solenoid valve filter, the engine oil filter, and the engine oil.

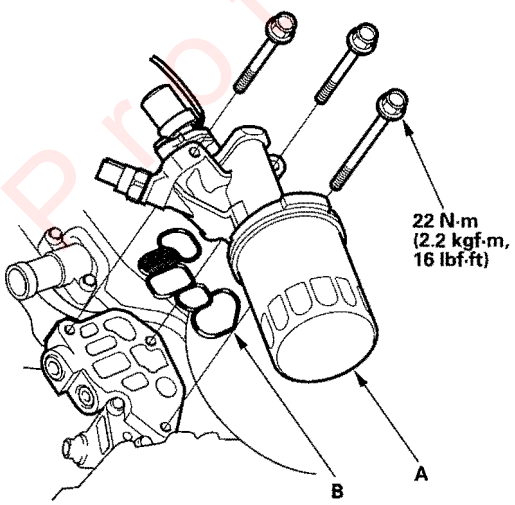

4. If the filter is not restricted, remove the VTEC solenoid valve (A) and push the valve (B) with your finger to check its movement. If the valve moves freely, it is normal, check the engine oil pressure. If the valve binds or sticks, replace the VTEC valve assembly.

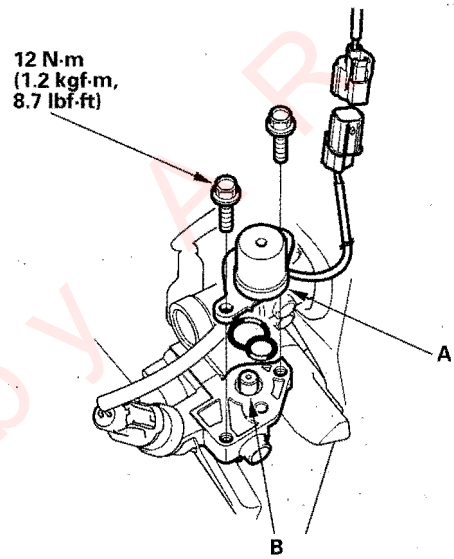

Protected by AR

VTEC Solenoid Valve Removal/ Installation

1. Disconnect the VTEC solenoid valve connector (A).

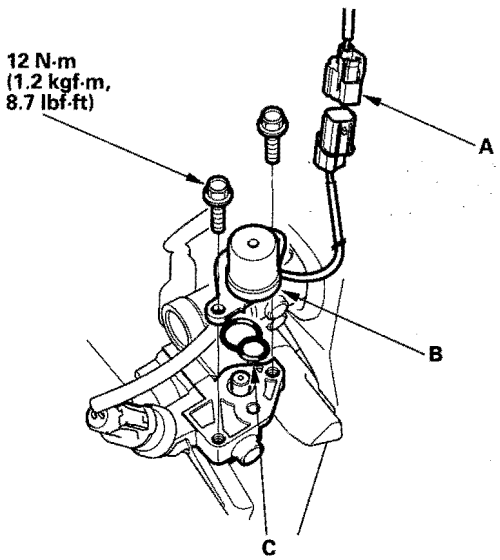

2. Remove the VTEC solenoid valve (B).
3. Install the parts in the reverse order of removal with a new O-ring (C).

VTEC Oil Pressure Switch Replacement

1. Disconnect the VTEC oil pressure switch connector (A), then remove the VTEC oil pressure switch (B).

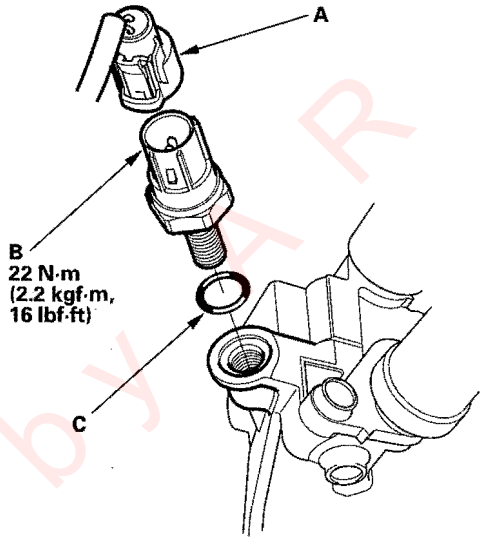

2. Install the switch in the reverse order of removal with a new O-ring (C).

Protected by AR

Component Location Index

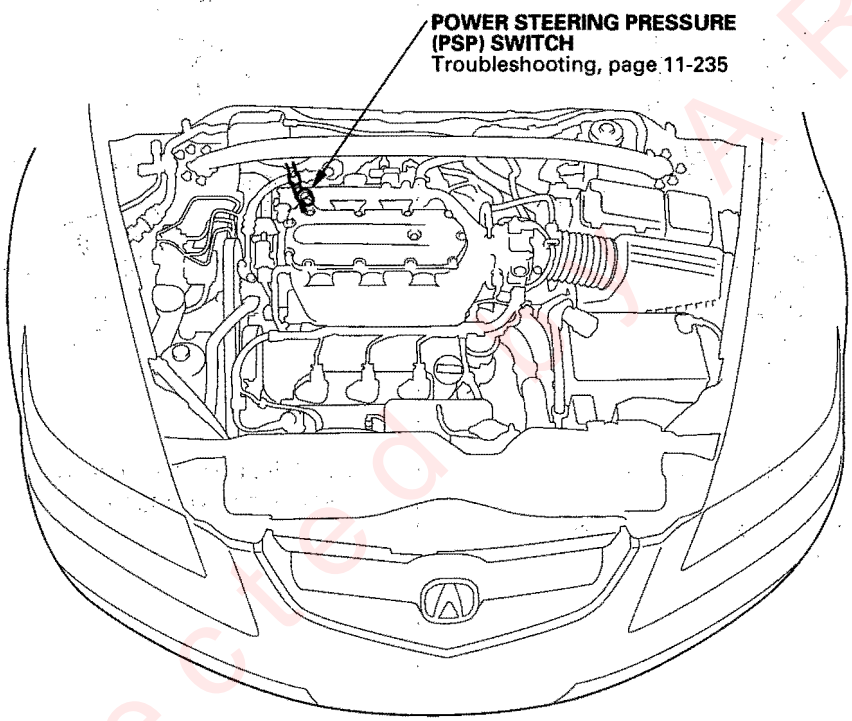

Protected by A R

DTC Troubleshooting

DTC P0506: Idle Control System RPM Lower Than Expected

1. Turn the ignition switch ON (II).
2. Clear the DTC with the HDS.
3. Start the engine. Hold the engine speed at 3,000 rpm with no load (in Park or neutral) until the radiator fan comes on, then let it idle.
4. Check this data in the DATA LIST with the HDS:
   - Engine coolant temperature more than 156°F (70°C)
   - Intake air temperature more than 32°F (0°C)
   - Vehicle speed is 0 mph (0 km/h)
   - AF FB between 0.73 and 1.47
   - FSS is CLOSED
5. Monitor the OBD STATUS for DTC P0506 in the DTCs MENU with the HDS.

   Does the screen indicate FAILED?

   YES—Go to step 6.

   NO—If the screen indicates PASSED, go to step 15. If the screen indicates EXECUTING, let the engine idle until a result comes on. If the screen indicates OUT OF CONDITION, go to step 4 and recheck.
6. Remove the intake air duct from the throttle body.
7. Check for dirt, carbon, or damage in the throttle bore.

   Is there dirt, carbon, or damage in the throttle bore?

   YES—If there is dirt or carbon, clean the throttle body (see page 11-272), and also check for damage at the air cleaner element (see page 11-273), then go to step 9. If there is damage in the throttle bore, go to step 8.

   NO—Check the A/C system or power steering system, then go to step 17.
8. Replace the throttle body (see page 11-277).
9. Reset the ECM/PCM with the HDS.
10. Do the ECM/PCM idle learn procedure (see page 11-239).
11. Start the engine, Hold the engine speed at 3,000 rpm with no load (in Park or neutral) until the radiator fan comes on, then let it idle.
12. Check this data in the DATA LIST with the HDS:
    - Engine coolant temperature more than 156°F (70°C)
    - Intake air temperature more than 32°F (0°C)
    - Vehicle speed is 0 mph (0 km/h)
    - AF FB between 0.73 and 1.47
    - FSS is CLOSED

(cont'd)

Protected by A

DTC Troubleshooting (cont'd)

13. Check for Temporary DTCs or DTCs with the HDS.

    Are any Temporary DTCs or DTCs indicated?

    YES – If DTC P0506 is indicated, go to step 1 and recheck. If any other temporary DTCs or DTCs are indicated, go to the indicated DTC's troubleshooting.

    NO – Go to step 14.

14. Monitor the OBD STATUS for DTC P0506 in the DTCs MENU with the HDS.

    Does the screen indicate PASSED?

    YES – Troubleshooting is complete. ■

    NO – If the screen indicates FAILED, go to step 1 and recheck. If the screen indicates EXECUTING, let the engine idle until a result comes on. If the screen indicates OUT OF CONDITION, go to step 12 and recheck.

15. Remove the intake air duct from the throttle body.

16. Check for dirt, carbon, or damage in the throttle bore.

    Is there dirt, carbon, or damage in the throttle bore?

    YES – If there is dirt or carbon, clean the throttle body (see page 11-272), and also check for damage at the air cleaner element (see page 11-273), then go to step 9. If there is damage in the throttle bore, go to step 8.

    NO – Go to step 17.

17. Recheck with different load conditions (turn on the headlights, blower motor, rear window defogger and/or A/C, changing the gear position, etc.).

18. Monitor the OBD STATUS for DTC P0506 in the DTCs MENU with the HDS.

    Does the screen indicate PASSED?

    YES – Intermittent failure, system is OK at this time. ■

    NO – If the screen indicates FAILED, check the A/C system and/or power steering system, then go to step 1 and recheck. If the screen indicates EXECUTING, let the engine idle until a result comes on. If the screen indicates OUT OF CONDITION, go to step 17 and recheck.

Protected by ...

DTC P0507: Idle Control System RPM Higher Than Expected

1. Turn the ignition switch ON (II).
2. Clear the DTC with the HDS.
3. Start the engine, Hold the engine speed at 3,000 rpm with no load (in Park or neutral) until the radiator fan comes on, then let it idle.
4. Monitor the OBD STATUS for DTC P0507 in the DTCs MENU with the HDS.

   Does the screen indicate FAILED?

   YES—Check for vacuum leaks at these parts, then go to step 5.

   - PCV valve
   - PCV hose
   - EVAP canister purge valve
   - Throttle body
   - Intake manifold
   - Brake booster hose

   NO—If the screen indicates PASSED, intermittent failure, system is OK at this time. If the screen indicates EXECUTING, let the engine idle until a result comes on. If the screen indicates OUT OF CONDITION, recheck with different load conditions (electrical, A/C, gear position, etc.), then go to step 3.
5. Turn the ignition switch ON (II).
6. Reset the ECM/PCM with the HDS.
7. Do the ECM/PCM idle learn procedure (see page 11-239).
8. Start the engine. Hold the engine speed at 3,000 rpm with no load (in neutral) until the radiator fan comes on, then let it idle.
9. Check for Temporary DTCs or DTCs with the HDS.

   Are any Temporary DTCs or DTCs indicated?

   YES—If DTC P0507 is indicated, check for poor connections or loose terminals at the throttle body, throttle actuator control module, and the ECM/PCM, then go to step 1. If any other Temporary DTCs or DTCs are indicated, go to the indicated DTC's troubleshooting.

   NO—Go to step 10.
10. Monitor the OBD STATUS for DTC P0507 in the DTCs MENU with the HDS.

    Does the screen indicate PASSED?

    YES—Troubleshooting is complete. ■

    NO—If the screen indicates FAILED, check for poor connections or loose terminals at the throttle body, the throttle actuator control module, and the ECM/PCM, then go to step 1. If the screen indicates EXECUTING, let the engine idle until a result comes on. If the screen indicates OUT OF CONDITION, recheck with different load conditions (electrical, A/C, gear position, etc.) then, go to step 8.

Protected by A R

A/C Signal Circuit Troubleshooting

1. Start the engine.
2. Turn the blower switch on.
3. Turn the A/C switch on.
4. Check the A/C CLUTCH in the DATA LIST with the HDS.

   Is it ON?

   YES — Go to step 5.

   NO — Go to the A/C pressure switch circuit test (see page 21-61).

5. Check the A/C system.

   Does the A/C system operate?

   YES — The air conditioning system circuit is OK. ■

   NO — Go to step 6.

6. Turn the ignition switch OFF.
7. Turn the ignition switch ON (II).
8. Activate the A/C CLUTCH in the INSPECTION MENU with the HDS.

   Is there a clicking noise from the A/C compressor clutch?

   YES — Do the A/C system troubleshooting (see page 21-92). ■

   NO — Go to step 9.

9. Momentarily connect under-hood fuse/relay box 16P connector terminal No. 15 to body ground with a jumper wire several times.

UNDER-HOOD FUSE/RELAY BOX 16P CONNECTOR

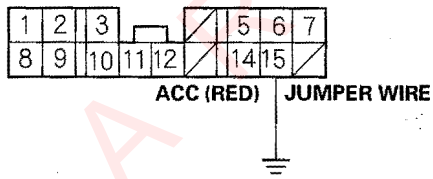

Wire side of female terminals

Is there clicking noise from the A/C compressor clutch?

YES — Repair open in the wire between the ECM/PCM (A27) and the A/C clutch relay. ■

NO — Update the ECM/PCM if it does not have the latest software, or substitute a known-good ECM/PCM, then recheck (see page 11-6). If the symptom/indication goes away with a known-good ECM/PCM, replace the original ECM/PCM (see page 11-171). ■

Protected by AP

Alternator FR Signal Circuit Troubleshooting

1. Start the engine, and let it idle.
2. Monitor the ALTERNATOR in the DATA LIST with the HDS.
3. Check if the indicated percentage varies when the headlight switch is on.

   Does the percentage vary?

   YES—The alternator signal circuit is OK.■

   NO—Go to step 4.
4. Turn the headlight switch and ignition switch OFF.
5. Disconnect the alternator 4P connector.
6. Turn the ignition switch ON (II).
7. Measure voltage between ECM/PCM connector terminals E3 and E12.

ECM/PCM CONNECTOR E (31P)

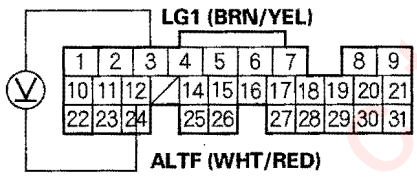

Wire side of female terminals

Is there about 5 V?

YES—Go to step 8.

NO—Go to step 13.

8. Turn the ignition switch ON.
9. Jump the SCS line with the HDS.
10. Disconnect ECM/PCM connector E (31P).
11. Connect alternator 4P connector terminal No. 4 to body ground with a jumper wire.

ALTERNATOR 4P CONNECTOR

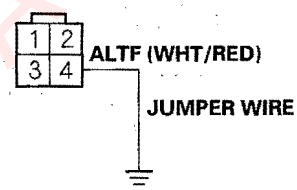

Wire side of female terminals

12. Check for continuity between body ground and ECM/PCM connector terminal E12.

ECM/PCM CONNECTOR E (31P)

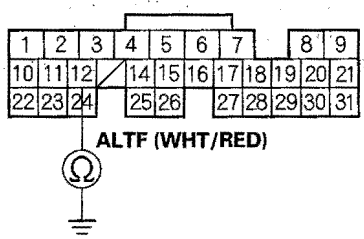

Wire side of female terminals

Is there continuity?

YES—Test the alternator (see page 4-25).■

NO—Repair open in the wire between the ECM/PCM (E12) and the alternator.■

(cont'd)

Protected by AR

Alternator FR Signal Circuit Troubleshooting (cont'd)

13. Turn the ignition switch OFF.
14. Jump the SCS line with the HDS.
15. Disconnect ECM/PCM connector E (31P).
16. Check for continuity between body ground and ECM/PCM connector terminal E12.

ECM/PCM CONNECTOR E (31P)

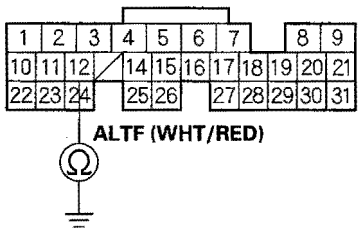

Wire side of female terminals

Is there continuity?

YES—Repair short in the wire between the ECM/PCM (E12) and the alternator. ■

NO—Update the ECM/PCM if it does not have the latest software, or substitute a known-good ECM/PCM, then recheck (see page 11-6). If the symptom/indication goes away with a known-good ECM/PCM, replace the original ECM/PCM (see page 11-171). ■

Protected by AR

PSP Switch Signal Circuit Troubleshooting

1. Start the engine, and let it idle.
2. Align the steering wheel straight ahead.
3. Check the PSP SWITCH in the DATA LIST with the HDS.

   Does it indicate ON?

   YES—Go to step 4.

   NO—Go to step 14.
4. Turn the steering wheel to the full lock position.
5. Check the PSP SWITCH in the DATA LIST with the HDS.

   Does it change to OFF?

   YES—The PSP switch signal circuit is OK. ■

   NO—Go to step 6.
6. Turn the ignition switch OFF.
7. Disconnect the PSP switch 2P connector.
8. Start the engine.
9. Check the PSP SWITCH in the DATA LIST with the HDS.

   Does it change to OFF?

   YES—Replace the PSP switch. ■

   NO—Go to step 10.
10. Turn the ignition switch OFF.
11. Jump the SCS line with the HDS.
12. Disconnect ECM/PCM connector A (31P).
13. Check for continuity between PSP switch 2P connector terminal No. 1 and body ground.

PSP SWITCH 2P CONNECTOR

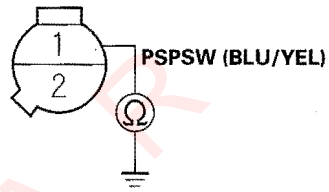

Wire side of female terminals

Is there continuity?

YES—Repair short in the wire between ECM/PCM (A17) and the PSP switch. ■

NO—Update the ECM/PCM if it does not have the latest software, or substitute a known-good ECM/PCM (see page 11-6), then recheck. If symptom/indication goes away with a known-good ECM/PCM, replace the original ECM/PCM (see page 11-171). ■

14. Turn the ignition switch OFF.
15. Disconnect the PSP switch 2P connector.
16. Connect PSP switch 2P connector terminals No. 1 and No. 2 with a jumper wire, then start the engine.

PSP SWITCH 2P CONNECTOR

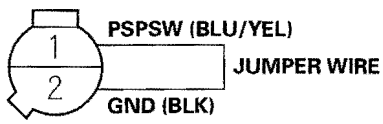

Wire side of female terminals

(cont'd)

Protected by AR

PSP Switch Signal Circuit Troubleshooting (cont'd)

17. Check the PSP SWITCH in the DATA LIST with the HDS.

    Does it change to ON?

    YES—Replace the PSP switch.■

    NO—Go to step 18.

18. Turn the ignition switch OFF.

19. Remove the jumper wire from the PSP switch 2P connector.

20. Jump the SCS line with the HDS.

21. Disconnect ECM/PCM connector A (31P).

22. Connect the PSP switch 2P connector terminal No. 1 to body ground with a jumper wire.

PSP SWITCH 2P CONNECTOR

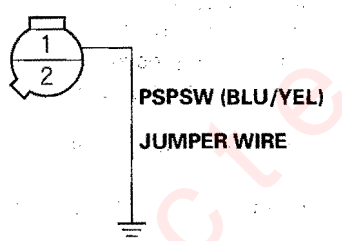

Wire side of female terminals

23. Check for continuity between body ground and ECM/PCM connector terminal A17.

ECM/PCM CONECTOR A (31P)

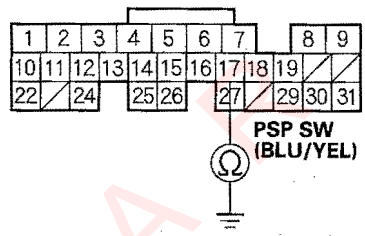

Wire side of female terminals

Is there continuity?

YES—Go to step 24.

NO—Repair open in the wire between the PSP switch and ECM/PCM (A17).■

24. Check for continuity between PSP switch 2P connector terminal No. 2 and body ground.

PSP SWITCH 2P CONNECTOR

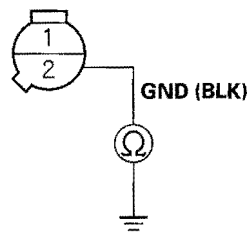

Wire side of female terminals

Is there continuity?

YES—Update the ECM/PCM if it does not have the latest software, or substitute a known-good ECM/PCM, then recheck (see page 11-6). If the symptom/indication goes away with a known-good ECM/PCM, replace the original ECM/PCM (see page 11-171).■

NO—Repair open in the wire between the PSP switch and G202.■

Protected by A

Brake Pedal Position Switch Signal Circuit Troubleshooting

1. Turn the ignition switch ON (II).
2. Check the BRAKE SWITCH in the DATA LIST with the HDS.

   Does it indicate OFF?

   YES—Go to step 3.

   NO—Inspect the brake pedal position switch (see page 19-6).■
3. Press the brake pedal, and check the BRAKE SWITCH in the DATA LIST with the HDS.

   Does it change to ON?

   YES—The brake pedal position switch signal circuit (BKSW line) is OK.■

   NO—Go to step 4.
4. Turn the ignition switch OFF.
5. Jump the SCS line with the HDS.
6. Disconnect the brake pedal position switch 4P connector.
7. Disconnect ECM/PCM connector A (31P).
8. Check for continuity between ECM/PCM connector terminal A8 and body ground.

ECM/PCM CONECTOR A (31P)

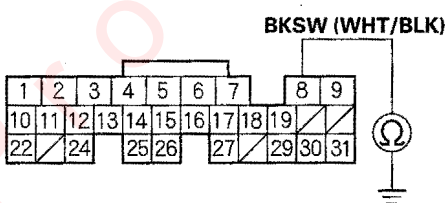

Wire side of female terminals

Is there continuity?

YES—Repair short in the wire between the ECM/PCM (A8) and the No. 13 HORN, STOP (20A) fuse. Replace the No. 13 HORN, STOP (20A) fuse.■

NO—Go to step 9.

9. Check for continuity between ECM/PCM connector terminal A8 and brake pedal position switch 4P connector terminal No. 2.

ECM/PCM CONNECTOR A (31P)

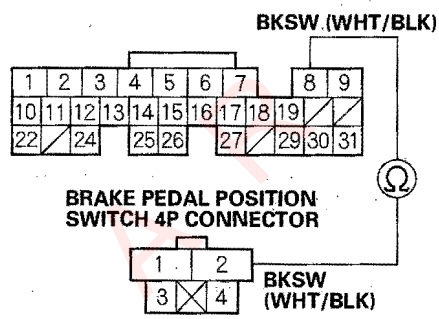

Wire side of female terminals

Is there continuity?

YES—Repair open in the wire between the brake pedal position switch and the No. 13 HORN, STOP (20A) fuse. Inspect the brake pedal position switch (see page 19-6).■

NO—Repair open in the wire between the ECM/PCM (A8) and the brake pedal position switch.■

Protected by

Idle Speed Inspection

NOTE:
- Before checking the idle speed, check these items:
  - The malfuction indicator lamp (MIL) has not been reported on and there are no DTCs.
  - Ignition timing
  - Spark plugs
  - Air cleaner
  - PCV system
- Pull the parking brake lever up.

1. Disconnect the evaporative emission (EVAP) canister purge valve connector.

2. Connect the HDS to the data link connector (DLC) (A) located under the driver's side of the dashboard.

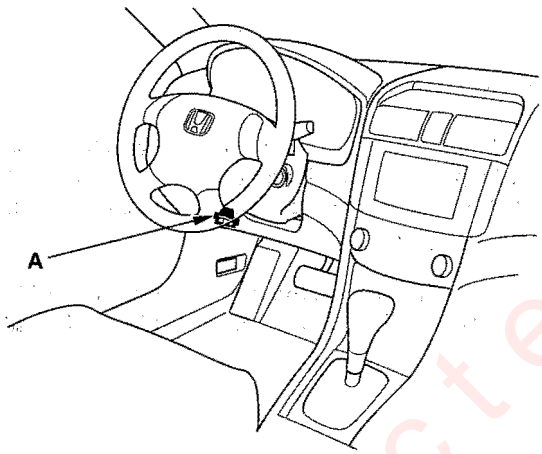

3. Start the engine. Hold the engine at 3,000 rpm with no load (in Park or neutral) until the radiator fan comes on, then let it idle.

4. Check the idle speed with no-load conditions: headlights, blower fan, radiator fan, and air conditioner off.

   Idle speed should be: 790 ± 50 rpm (in Park or neutral)

5. Let the engine idle for 1 minute with the blower fan on high and the air conditioner on.

   Idle speed should be: 790 ± 50 rpm (in Park or neutral)

   NOTE: If the idle speed is not within specification, go to the System Troubleshooting Index (see page 11-11).

6. Reconnect the EVAP canister purge valve connector.

Protected by AR

ECM/PCM Idle Learn Procedure

The idle learn procedure must be done so the ECM/PCM can learn the engine idle characteristics.

Do the idle learn procedure whenever you do any of these actions:

- The ECM/PCM is replaced.
- The ECM/PCM is reset.
- The throttle body is replaced.

NOTE: Erasing DTCs with the HDS does not require you to do the idle learn procedure.

Procedure

1. Make sure all electrical items (A/C, audio, rear window defogger, lights, etc.,) are off.
2. Do the ECM/PCM RESET in the CLEAR MENU with the HDS.
3. Turn the ignition switch ON (II), and wait for 2 seconds.
4. Start the engine, and hold it at 3,000 rpm with no load (in Park or neutral) until the radiator fan comes on, or until the engine coolant temperature reaches 194°F (90°C).
5. Let the engine idle for about 5 minutes with the throttle fully closed.

   NOTE: If the radiator fan comes on, do not include its running time in the 5 minutes.

Protected by AR

Component Location Index

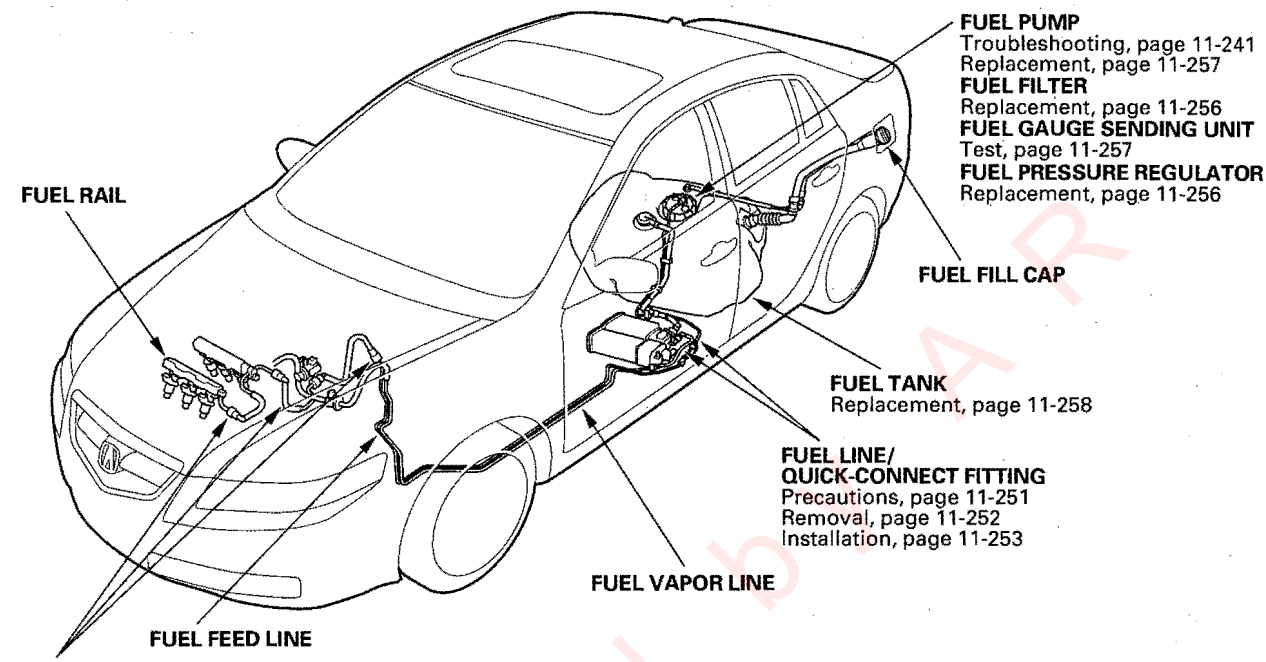

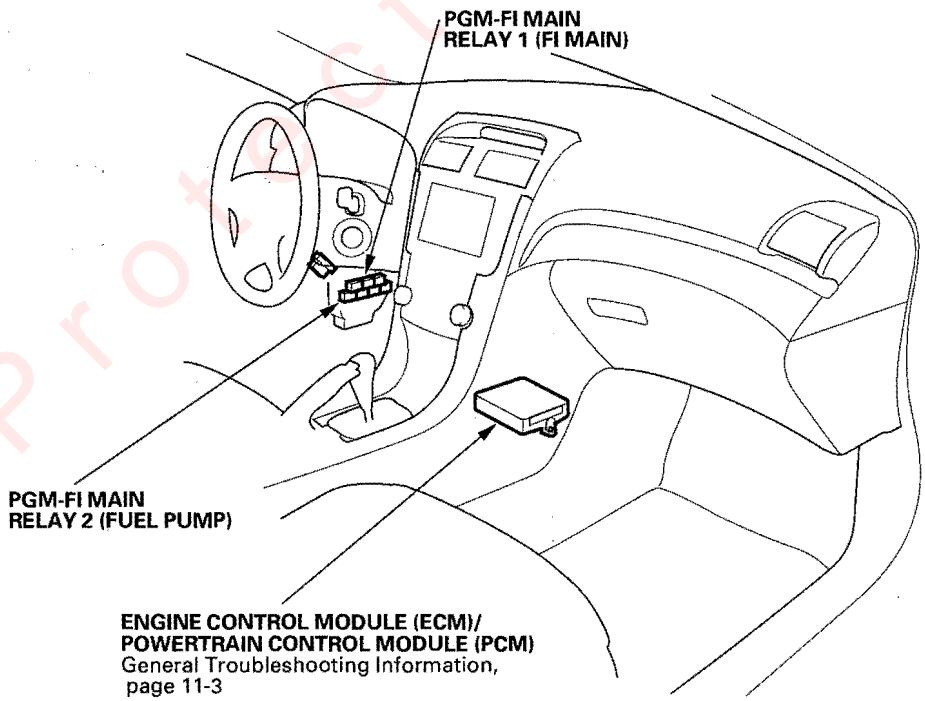

Protected by CARFAX

Fuel Pump Circuit Troubleshooting

If you suspect a problem with the fuel pump, check that the fuel pump actually runs; when it is on, you will hear some noise if you listen to the fuel fill port with the fuel fill cap removed. The fuel pump should run for 2 seconds when the ignition switch is first turned on. If the fuel pump does not make noise, check as follows:

1. Turn the ignition switch OFF.
2. Remove the left kick panel (see page 20-62), then remove the PGM-FI main relay 2 (FUEL PUMP) (A) from the under-dash fuse/relay box.

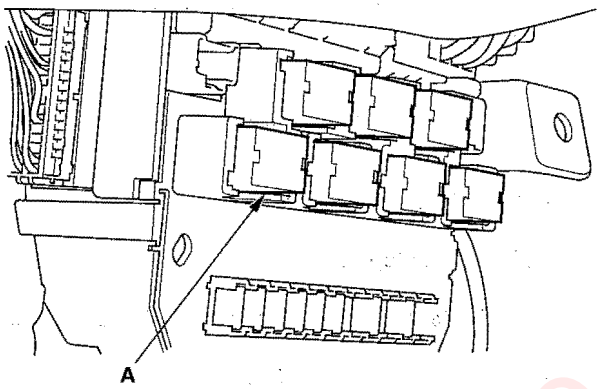

3. Turn the ignition switch ON (II).
4. Measure voltage between PGM-FI main relay 2 (FUEL PUMP) 4P connector terminal No. 3 and body ground.

PGM-FI MAIN RELAY 2 (FUEL PUMP) 4P CONNECTOR

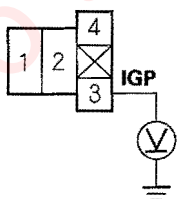

Terminal side of female terminals

Is there battery voltage?

YES—Go to step 5.

NO—
- Replace the PGM-FI main relay 1 (FI MAIN). ■
- Replace the under-dash fuse/relay box. ■

5. Measure voltage between PGM-FI main relay 2 (FUEL PUMP) 4P connector terminal No. 1 and body ground.

PGM-FI MAIN RELAY 2 (FUEL PUMP) 4P CONNECTOR

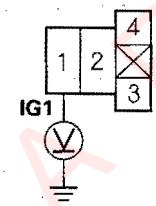

Terminal side of female terminals

Is there battery voltage?

YES—Go to step 6.

NO—
- Check the No. 19 FUEL PUMP (15A) fuse in the under-dash fuse/relay box. ■
- Replace the under-dash fuse/relay box. ■

6. Turn the ignition switch OFF.
7. Connect PGM-FI main relay 2 (FUEL PUMP) 4P connector terminal No. 4 to body ground with a jumper wire.

PGM-FI MAIN RELAY 2 (FUEL PUMP) 4P CONNECTOR

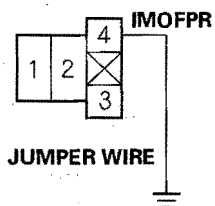

Terminal side of female terminals

(cont'd)

Protected by AR

Fuel Pump Circuit Troubleshooting (cont'd)

8. Turn the ignition switch OFF.
9. Jump the SCS line with the HDS.
10. Disconnect ECM/PCM connector A (31P).
11. Check for continuity between body ground and ECM/PCM connector terminal A2.

ECM/PCM CONNECTOR A (31P)

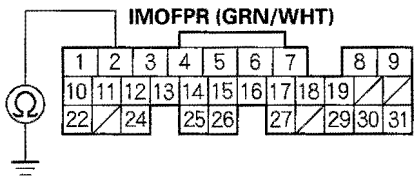

Wire side of female terminals

Is there continuity?

YES—Go to step 12.

NO—Repair open in the wire between PGM-FI main relay 2 (FUEL PUMP) and the ECM/PCM (A2).■

12. Reinstall PGM-FI main relay 2 (FUEL PUMP).
13. Connect ECM/PCM connector terminal A5 to body ground with jumper wire.

ECM/PCM CONNECTOR A (31P)

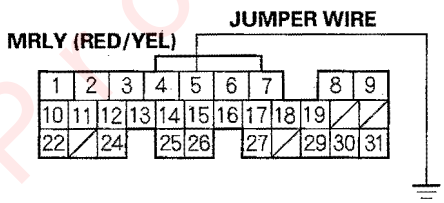

Wire side of female terminals

14. Turn the ignition switch ON (II).
15. Measure voltage between ECM/PCM connector terminal A2 and body ground.

ECM/PCM CONNECTOR A (31P)

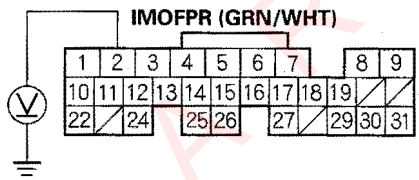

Wire side of female terminals

Is there battery voltage?

YES—Go to step 16.

NO—Replace PGM-FI main relay 2 (FUEL PUMP).■

16. Turn the ignition switch OFF.
17. Reconnect ECM/PCM connector A (31P).
18. Open the SCS line with the HDS.
19. Turn ignition switch OFF.

Protected by AP

20. Turn the ignition switch ON (II), and measure voltage between ECM/PCM connector terminal A2 and body ground within the first 2 seconds after the ignition switch was turned on.

ECM/PCM CONNECTOR A (31P)

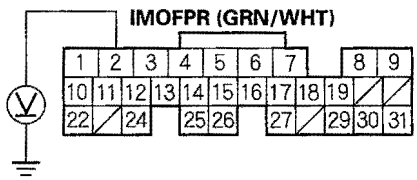

Wire side of female terminals

Is there battery voltage?

YES—Update the ECM/PCM if it does not have the latest software, or substitute a known-good ECM/PCM, then recheck (see page 11-6). If the symptom/indication goes away with a known-good ECM/PCM, replace the original ECM/PCM (see page 11-171).■

NO—Go to step 21.

21. Turn the ignition switch OFF.
22. Remove the trunk floor trim panel.
23. Remove the access panel from the floor.
24. Measure voltage between fuel pump 5P connector terminal No. 5 and body ground within the first 2 seconds after the ignition switch was turned on.

FUEL PUMP 5P CONNECTOR

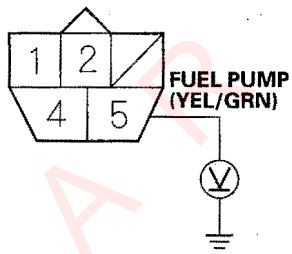

Wire side of female terminals

Is there battery voltage?

YES—Go to step 30.

NO—Go to step 25.

25. Turn the ignition switch OFF.
26. Remove PGM-FI main relay 2 (FUEL PUMP).
27. Connect PGM-FI main relay 2 (FUEL PUMP) 4P connector terminals No. 1 and No. 2 with a jumper wire.

PGM-FI MAIN RELAY 2 (FUEL PUMP) 4P CONNECTOR

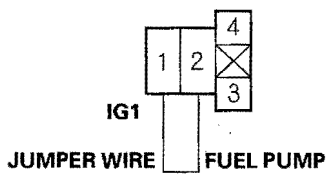

Terminal side of female terminals

(cont'd)

Protected by AP

Fuel Pump Circuit Troubleshooting (cont'd)

28. Turn the ignition switch ON (II).

29. Measure voltage between fuel pump 5P connector terminal No. 5 and body ground within the first 2 seconds.

FUEL PUMP 5P CONNECTOR

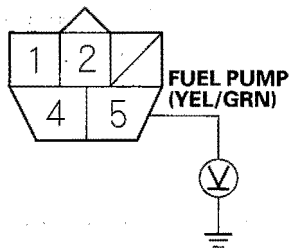

Wire side of female terminals

Is there battery voltage?

YES—Replace PGM-FI main relay 2 (FUEL PUMP).■

NO—Repair open in the wire between PGM-FI main relay 2 (FUEL PUMP) and fuel pump 5P connector.■

30. Turn the ignition switch OFF.

31. Check for continuity between fuel pump 5P connector terminal No. 4 and body ground.

FUEL PUMP 5P CONNECTOR

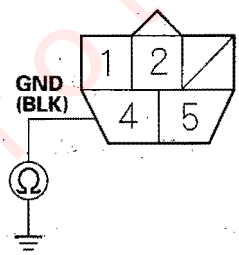

Wire side of female terminals

Is there continuity?

YES—Replace the fuel pump.■

NO—Repair open in the wire between the fuel pump 5P connector and G603.■

Protected by A R

Fuel Pressure Relieving

Before disconnecting fuel lines or hoses, relieve pressure from the system by stopping the fuel pump and then disconnecting the fuel tube/quick connect fitting in the engine compartment.

With the HDS

1. Remove the fuel fill cap.
2. Turn the ignition switch ON (II).
3. From the INSPECTION MENU of the HDS, select Fuel Pump OFF, then start the engine and let it idle until it stalls.
4. Turn the ignition switch OFF.

   NOTE:
   - Do not allow the engine to idle above 1,000 rpm or the ECM/PCM will continue to operate the fuel pump.
   - A DTC or a Temporary DTC may be set during this procedure. Check for DTCs, and clear them as needed (see page 11-4).
5. Turn the ignition switch OFF.
6. Make sure you have the anti-theft codes for the radio and the navigation system (if equipped) then write down the XM radio channel presets.
7. Make sure the ignition switch is OFF, then disconnect the negative cable from the battery.
8. Remove the quick-connect fitting cover (A).

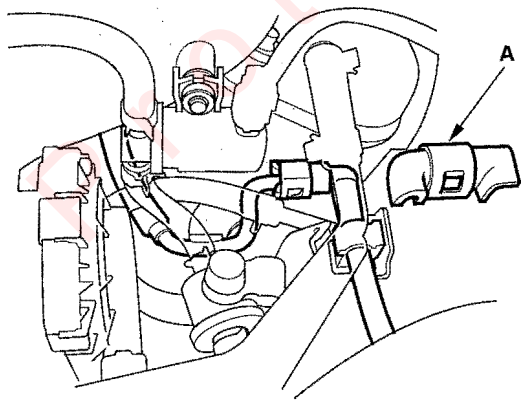

9. Check the fuel quick-connect fitting for dirt, and clean it if needed.
10. Place a rag or shop towel over the quick-connect fitting (A).

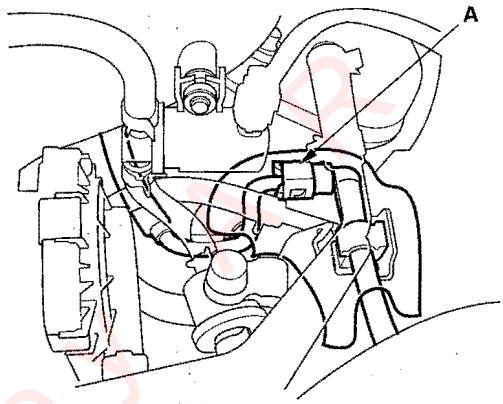

11. Disconnect the quick-connect fitting (A): Hold the connector (B) with one hand, and squeeze the retainer tabs (C) with the other hand to release them from the locking tabs (D). Pull the connector off.

    NOTE:
    - To prevent the remaining fuel in the fuel feed line or hose from flowing out, use a rag or shop towel.
    - Be careful not to damage the line (E) or other parts.
    - Do not use tools.
    - If the connector does not move, keep the retainer tabs pressed down, and alternately pull and push the connector until it comes off easily.
    - Do not remove the retainer from the line; once removed, the retainer must be replaced with a new one.

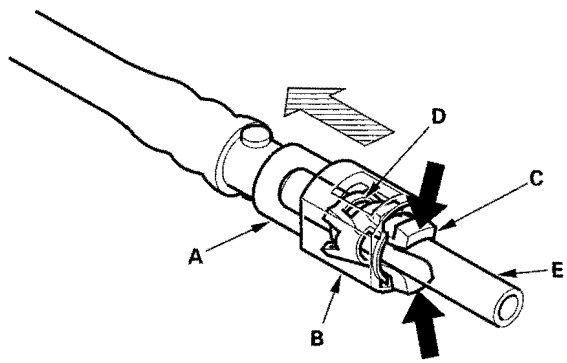

(cont'd)

Protected by

Fuel Pressure Relieving (cont'd)

12. After disconnecting the quick-connect fitting, check it for dirt or damage (see step 4 on page 11-253).

13. Reconnect the negative cable to the battery and do the following items:

    - Enter the anti-theft codes for the radio and the navigation system, then enter the customer's XM radio channel presets.
    - Set the clock.

Without the HDS

1. Make sure you have the anti-theft codes for the radio and the navigation system (if equipped) then write down the XM radio channel presets.

2. Remove the left kick panel (see page 20-62), then remove PGM-FI main relay 2 (FUEL PUMP) (A) from the under-dash fuse/relay box.

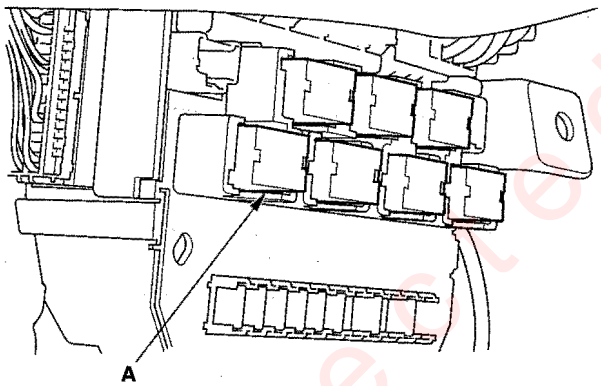

3. Start the engine, and let it idle until it stalls.

   NOTE: If any DTCs are stored, clear and ignore them.

4. Turn the ignition switch OFF.

5. Remove the fuel fill cap, and relieve the pressure in the fuel tank.

6. Make sure the ignition switch is OFF, then disconnect the negative cable from the battery.

7. Remove the quick-connect fitting cover (A).

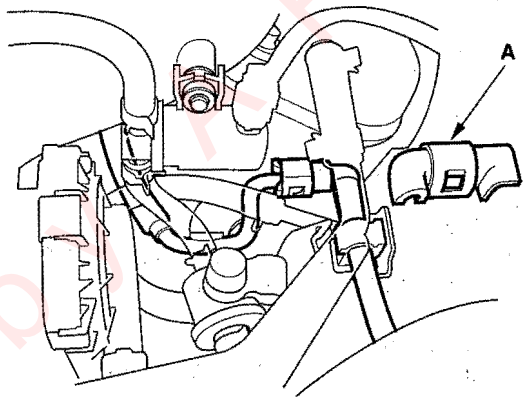

8. Check the fuel quick-connect fitting for dirt, and clean it if needed.

9. Place a rag or shop towel over the quick-connect fitting (A).

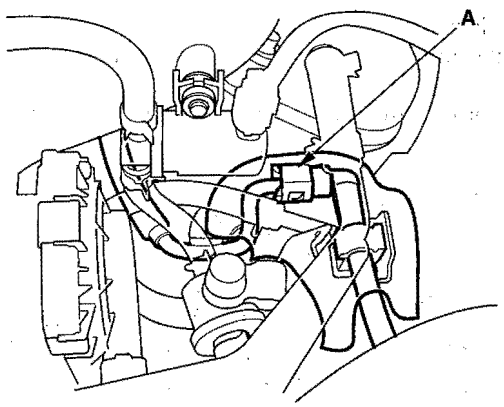

Protected by KAR

10. Disconnect the quick-connect fitting (A): Hold the connector (B) with one hand, and squeeze the retainer tabs (C) with the other hand to release them from the locking tabs (D). Pull the connector off.

    NOTE:
    - To prevent the remaining fuel in the fuel feed line or hose from flowing out, use a rag or shop towel.
    - Be careful not to damage the line (E) or other parts.
    - Do not use tools.
    - If the connector does not move, keep the retainer tabs pressed down, and alternately pull and push the connector until it comes off easily.
    - Do not remove the retainer from the line; once removed, the retainer must be replaced with a new one.

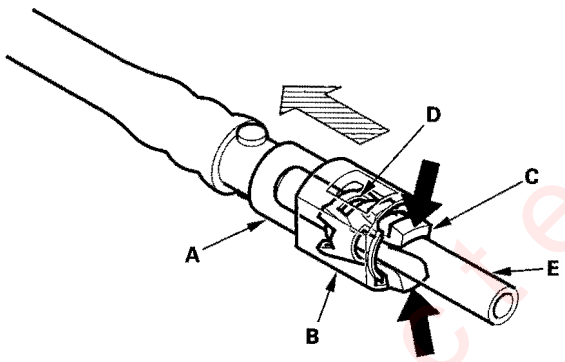

11. After disconnecting the quick-connect fitting, check it for dirt or damage (see step 4 on page 11-253).

12. Reconnect the negative cable to the battery and do the following items:

    - Enter the anti-theft codes for the radio and the navigation system, then enter the customer's XM radio channel presets.
    - Set the clock.

Fuel Pressure Test

Special Tools Required
- Fuel pressure gauge 07406-004000B
- Fuel pressure gauge attachment set 07AAJ-S6MA150

1. Relieve the fuel pressure (see page 11-245).

2. Attach the fuel pressure gauge set and the fuel pressure gauge.

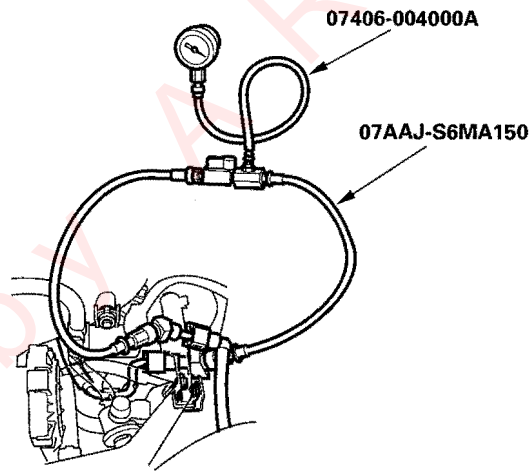

3. Start the engine and let it idle.

    - If the engine starts, go to step 5.
    - If the engine does not start, go to step 4.

4. Check to see if the fuel pump is running: listen to the fuel filler port with the fuel fill cap removed. The fuel pump should run for 2 seconds when the ignition switch is first turned on.

    - If the pump runs, go to step 5.
    - If the pump does not run, do the fuel pump circuit troubleshooting (see page 11-241).

5. Read the fuel pressure gauge. The pressure should be 330—380 kPa (3.4—3.9 kgf/cm^2, 48—55 psi).

    - If the pressure is OK, the test is complete.
    - If the pressure is out of specification, replace the fuel pressure regulator (see page 11-256) and the fuel filter (see page 11-256), then recheck the fuel pressure.

Protected by AR

Fuel Tank Draining

1. Remove the fuel tank unit (see page 11-257).
2. Using a hand pump, a hose, and a container suitable for gasoline, draw the fuel from the fuel tank.

Protected by A R

Fuel Line Inspection

Check the fuel system lines and hoses, for damage, leaks, and deterioration. Replace any damaged parts.

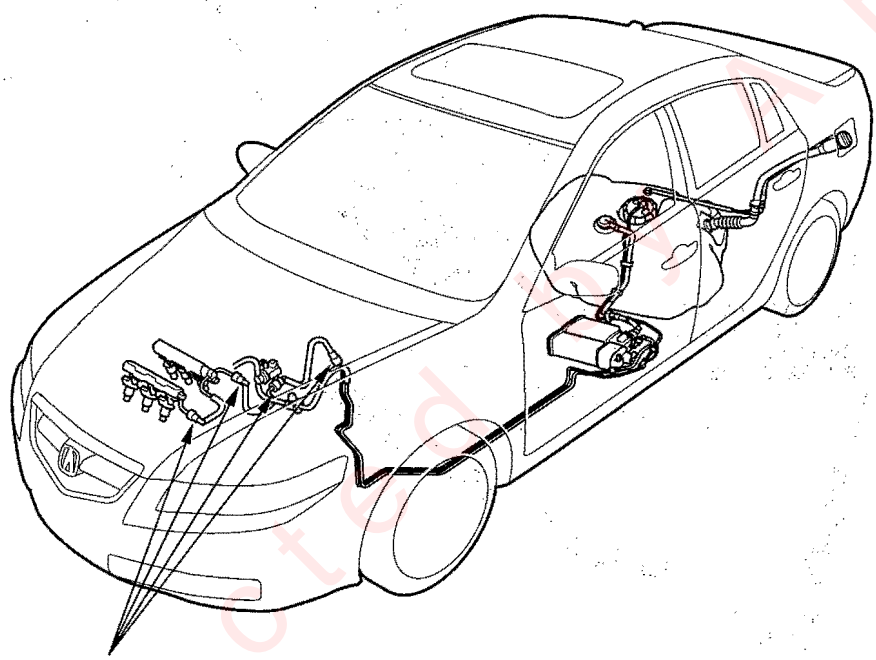

Make sure the connections are secure and the quick-connect fitting covers are firmly locked in place.

Protected by AR

(cont'd)

Fuel Line Inspection (cont'd)

Check all clamps and retighten if necessary.

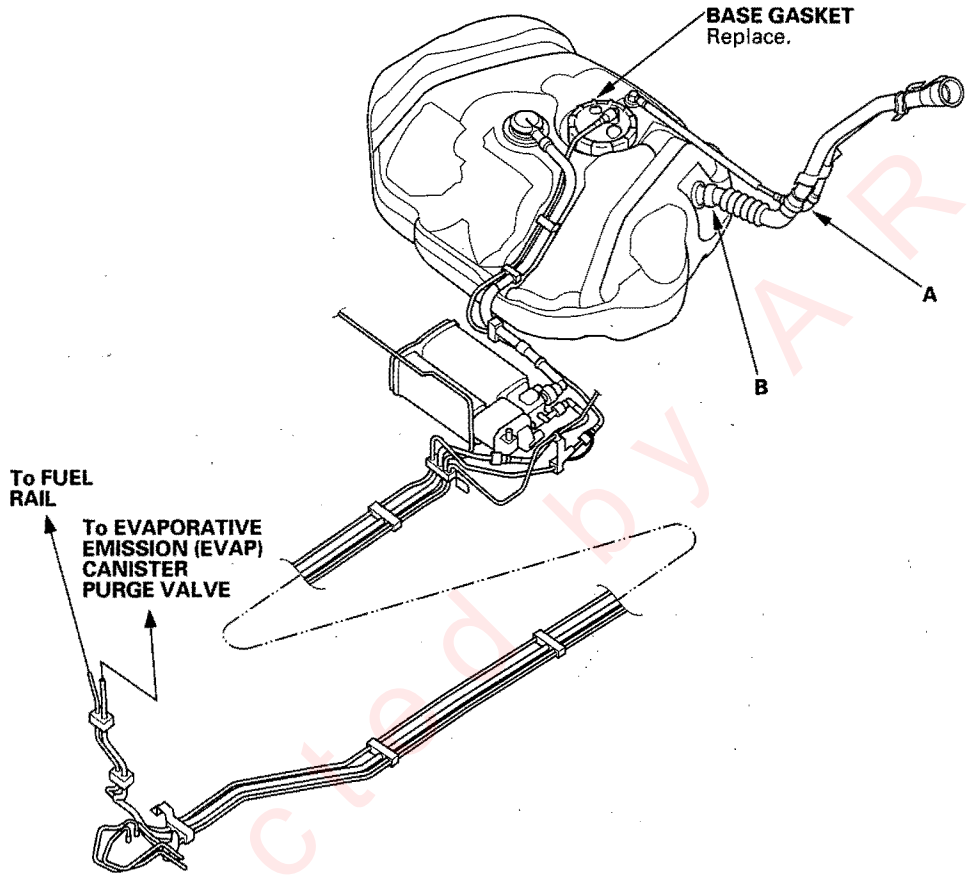

A:

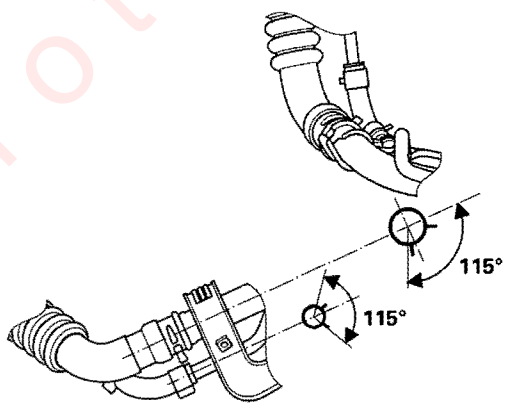

B:

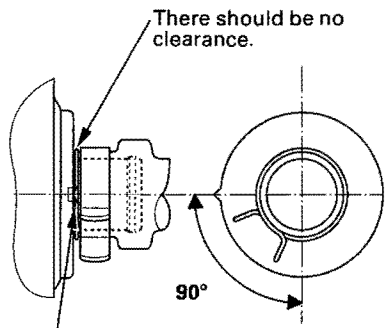

When installing the fuel fill tube, align the marks on the tube and the line.

Protected by AR

Fuel Line/Quick-Connect Fitting Precaution

The fuel line/quick-connect fittings connect the fuel rail (A) to the fuel feed hose (B), fuel feed hose (B) to the fuel feed hose (C), the fuel feed hose (C) to the fuel line (D), the fuel line (E) to the fuel tank unit (F) and the fuel vapor line (G) to the EVAP canister (H). When removing or installing the fuel feed hose, fuel tank unit, or fuel tank, it is necessary to disconnect or connect the quick-connect fittings.
Pay attention to the following:

- The fuel feed hoses, fuel line, and quick-connect fittings are not heat-resistant; be careful not to damage them during welding or other heat-generating procedures.
- The fuel feed hoses, fuel line, and quick-connect fittings are not acid-proof; do not touch them with a shop towel that was used for wiping battery electrolyte. Replace them if they came into contact with electrolyte or something similar.
- When connecting or disconnecting the fuel feed hoses, fuel line, and quick-connect fittings, be careful not to bend or twist them excessively. Replace them if they are damaged.

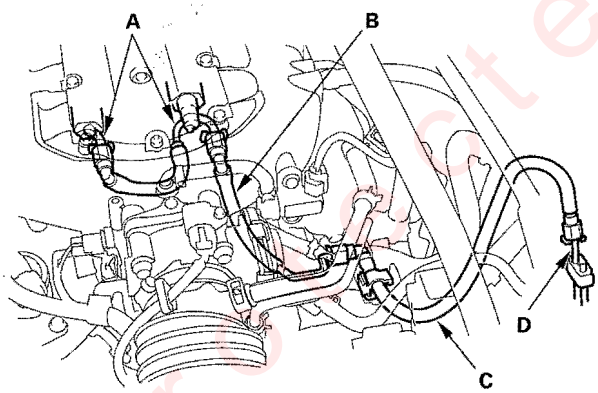

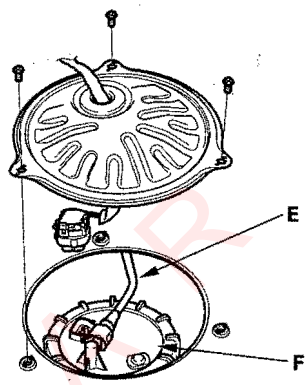

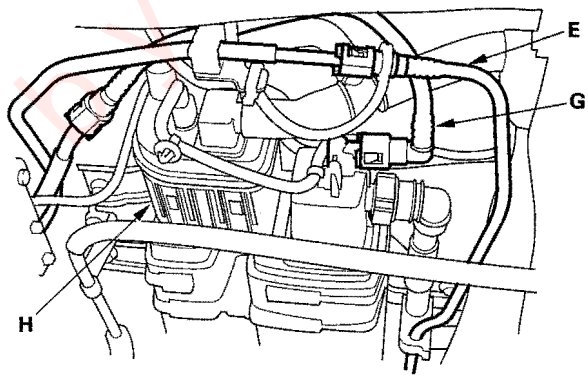

A disconnected quick-connect fitting can be reconnected, but the retainer on the mating line cannot be reused once it has been removed from the line. Replace the retainer when:

- replacing the fuel rail.
- replacing the fuel line.
- replacing the fuel pump.
- replacing the fuel filter.
- replacing the fuel gauge sending unit.
- it has been removed from the line.
- it is damaged.

Retainer location	Manufacturer	Retainer color
Engine compartment	Tokai	Blue green
Fuel tank unit: Fuel feed line, fuel tank unit side	Tokai	Orange
Fuel tank unit: Fuel feed line, fuel line side	Tokai	Blue green

Protected by KAR

Fuel Line/Quick-Connect Fitting Removal

1. Relieve the fuel pressure (see page 11-245).

2. Check the fuel quick-connect fittings (A) for dirt, and clean it if needed.

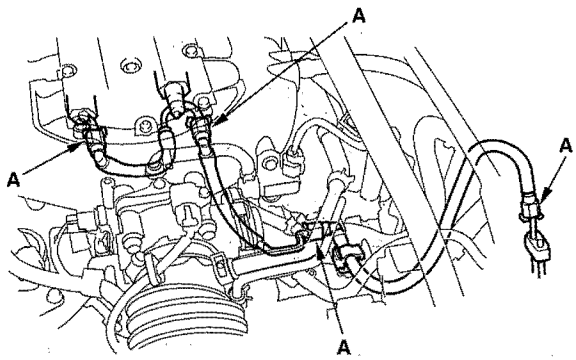

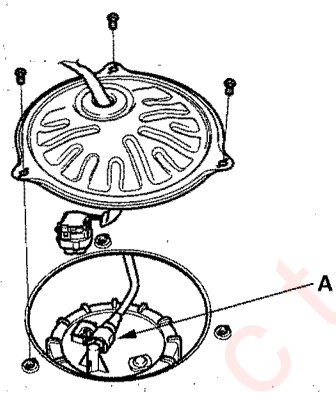

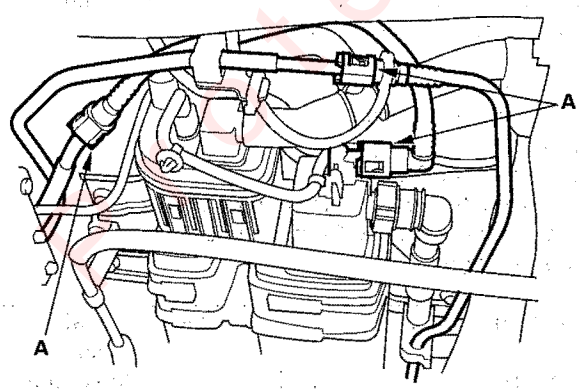

3. Place a rag or shop towel over the quick-connect fitting. Hold the connector (A) with one hand, and squeeze the retainer tabs (B) with the other hand to release them from the locking tabs (C). Pull the connector off.

NOTE:
- Be careful not to damage the line (D) or other parts. Do not use tools.
- If the connector does not move, keep the retainer tabs pressed down, and alternately pull and push the connector until it comes off easily.
- Do not remove the retainer from the line; once removed, the retainer must be replaced with a new one.

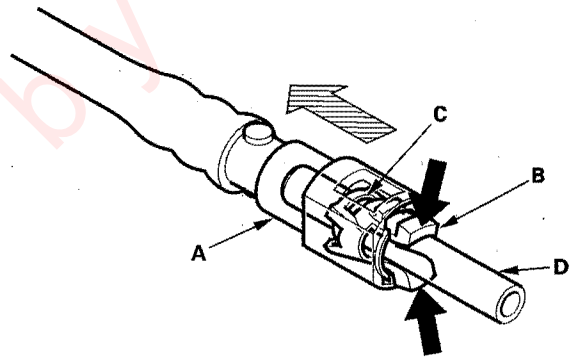

Protected by AR

4. Check the contact area (A) of the line (B) for dirt or damage.

   - If it is dirty, clean it.
   - If it is rusty or damaged, replace the fuel pump, fuel filter, or fuel feed line.

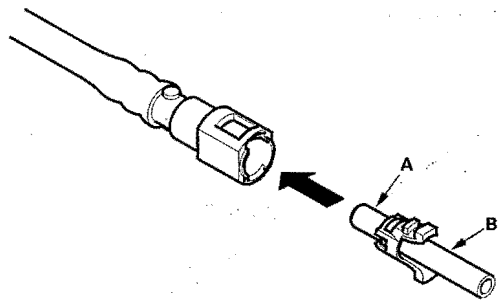

5. To prevent damage and keep foreign matter out, cover the disconnected connector and line ends with plastic bags (A).

   NOTE:
   - The retainer cannot be reused once it has been removed from the line.
     Replace the retainer when:
     – replacing the fuel rail.
     – replacing the fuel feed line.
     – replacing the fuel pump.
     – replacing the fuel filter.
     – replacing the fuel gauge sending unit.
     – it has been removed from the line.
     – it is damaged.

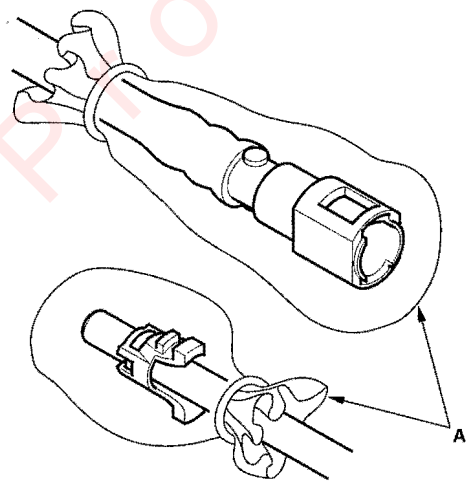

Fuel Line/Quick-Connect Fitting Installation

1. Check the contact area (A) of the line (B) for dirt or damage, and clean it if needed.

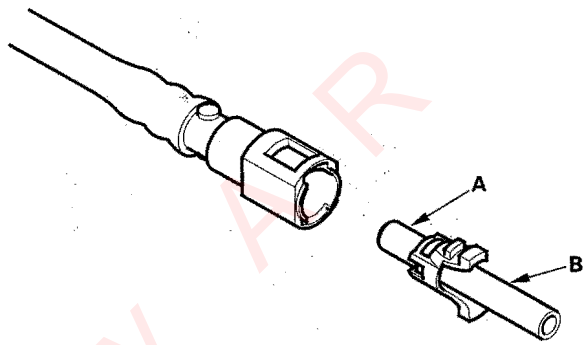

2. Insert a new retainer (A) into the connector (B) if the retainer is damaged, or after:

   - replacing the fuel rail.
   - replacing the fuel feed line.
   - replacing the fuel pump.
   - replacing the fuel filter.
   - replacing the fuel gauge sending unit.
   - removing the retainer from the line.
   - Use the same manufacturer retainer and the same size retainer when the replacing the retainer (see page 11-251).

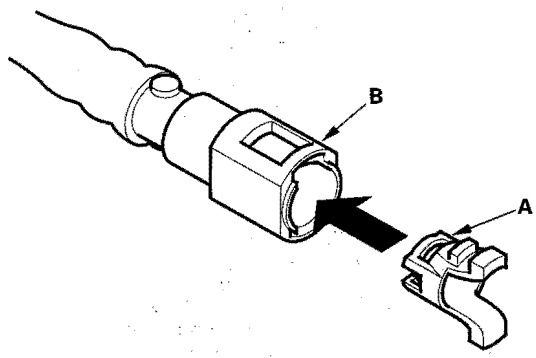

(cont'd)

Protected by AR

Fuel Line/Quick-Connect Fitting Installation (cont'd)

3. Before connecting a new fuel tube/quick-connect fitting assembly (A), remove the old retainer from the mating line.

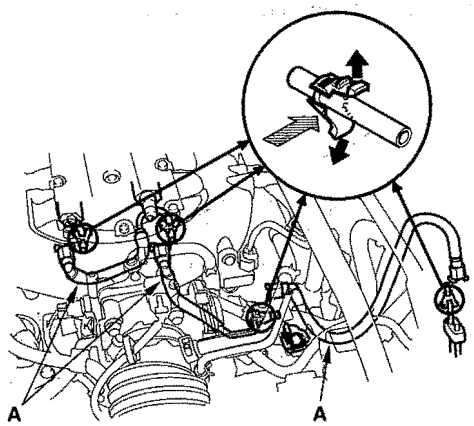

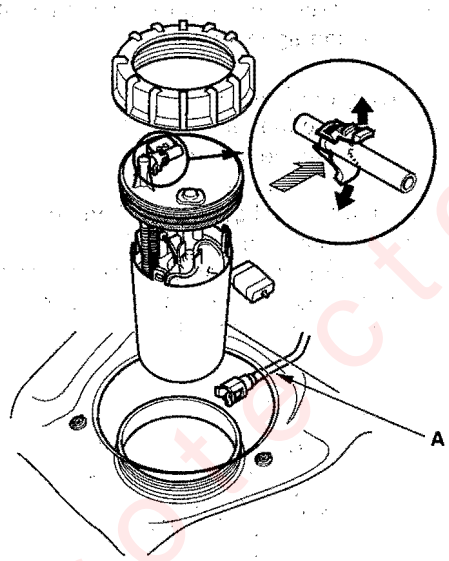

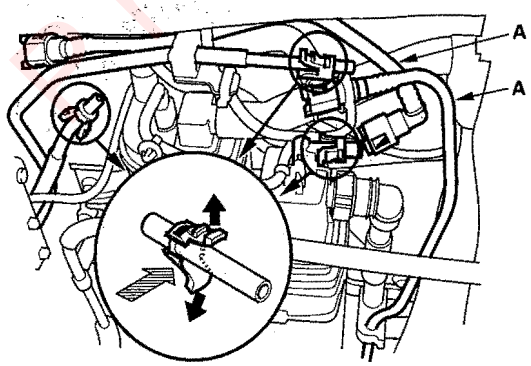

4. Align the quick-connect fittings with the line (A), and align the retainer locking tabs (B) with the connector grooves (C). Then press the quick-connect fittings onto the line until both retainer pawls lock with a clicking sound.

   NOTE: If it is hard to connect, put a small amount of new engine oil on the line end.

Connection with new retainer:

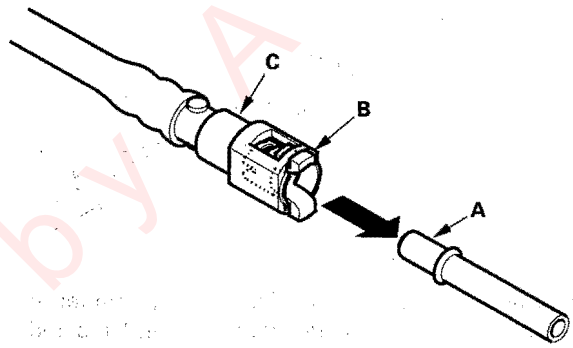

Reconnection to existing retainer:

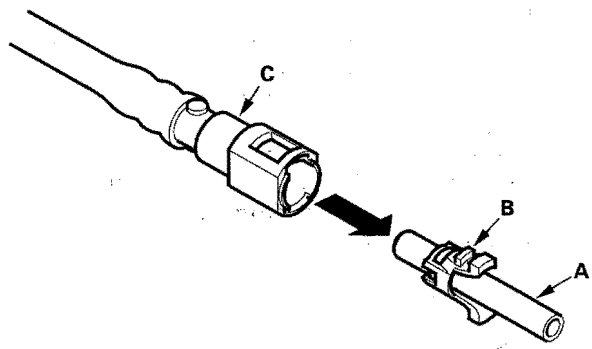

Protected by AR

5. Make sure the connection is secure and that the tabs are firmly locked into place; check visually and by pulling the connector.

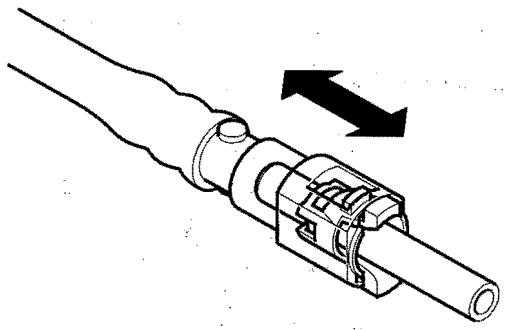

6. Reconnect the negative cable to the battery, and turn the ignition switch ON (II) (but do not operate the starter motor). The fuel pump will run for about 2 seconds, and fuel pressure will rise. Repeat two or three times, and check that there is no leakage in the fuel supply system.

Protected by A R

Fuel Pressure Regulator Replacement

1. Remove the fuel pump (see page 11-257).
2. Remove the clip (A).

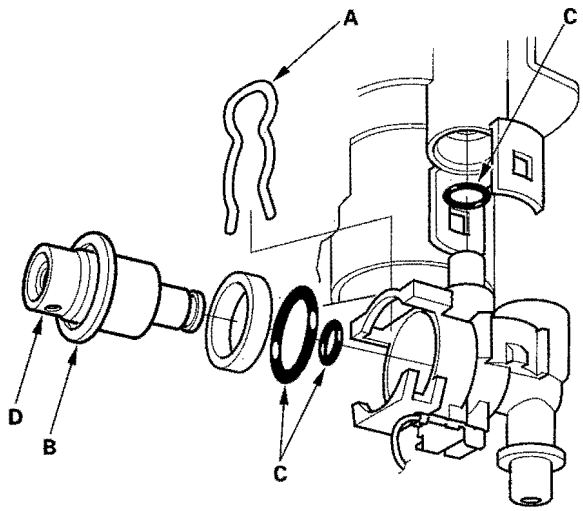

3. Remove the fuel pressure regulator (B).
4. Install the regulator in the reverse order of removal with new O-rings (C).
   Make sure the regulator is installed with the drain hole (D) facing down.

Fuel Filter Replacement

The fuel filter should be replaced whenever the fuel pressure drops below the specified value (see page 11-247), after making sure that the fuel pump and the fuel pressure regulator are OK.

1. Remove the fuel pump (see page 11-257).
2. Remove the fuel filter set (A).

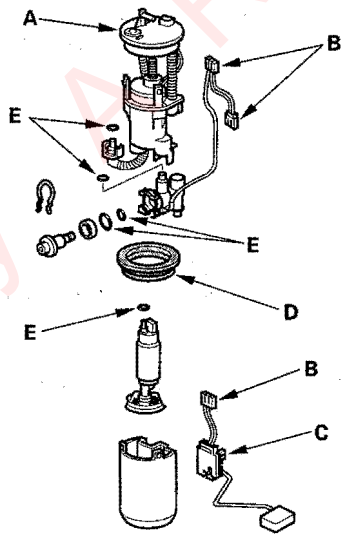

3. Check these items before installing the fuel tank unit:
   - When connecting the wire harness, make sure the connection is secure and the connectors (B) are firmly locked into place.
   - When installing the fuel gauge sending unit (C), make sure the connection is secure and the connector (B) is firmly locked into place. Be careful not to bend or twist it excessively.
4. Install the parts in the reverse order of removal with a new base gasket (D) and new O-rings (E). When installing the fuel tank unit, align the marks on the unit and the fuel tank (see step 12 on page 11-257).

Protected by AR

Fuel Pump/Fuel Gauge Sending Unit Replacement

Special Tools Required
Fuel sender wrench 07AAA-S0XA100

1. Relieve the fuel pressure (see page 11-245).
2. Remove the fuel fill cap.
3. Remove the trunk floor.
4. Remove the access panel (A) from the floor.

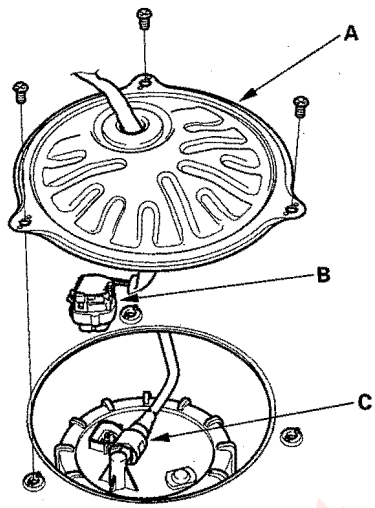

5. Disconnect the fuel pump 5P connector (B).
6. Disconnect the quick-connect fitting (C) from the fuel tank unit.
7. Using the special tool, loosen the fuel pump/sender assembly locknut (A).

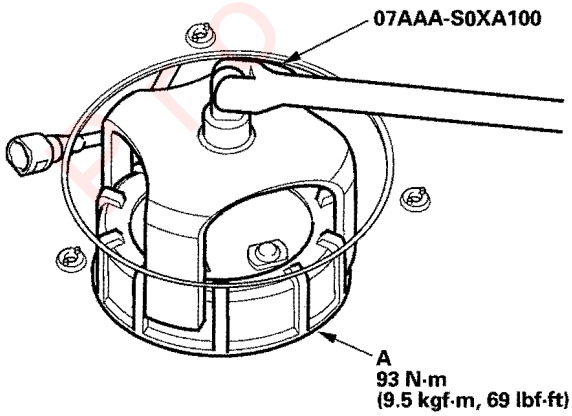

8. Remove the locknut (A) and the fuel tank unit.

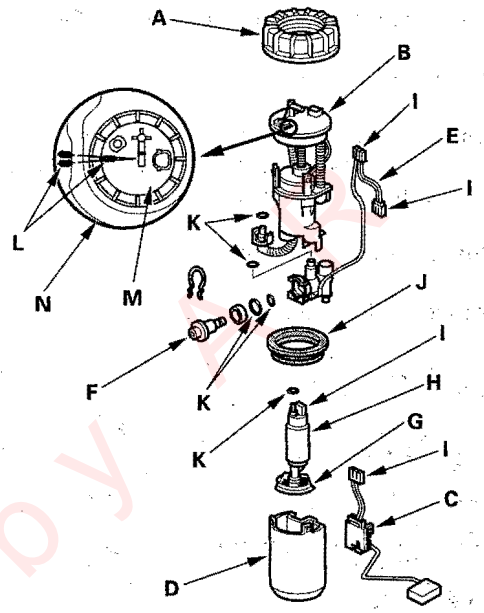

9. Remove the fuel filter (B), the fuel gauge sending unit (C), the case (D), the wire harness (E), and the fuel pressure regulator (F).
10. When connecting the fuel pump assembly, make sure the connection is secure and the suction filter (G) is firmly connected to the fuel pump (H).
11. Check these items before installing the fuel tank unit:
    - When connecting the wire harness, make sure the connection is secure and the connectors (I) are firmly locked into place.
    - When installing the fuel gauge sending unit, make sure the connection is secure and the connector (I) is firmly locked into place. Be careful not to bend or twist it excessively.
12. Install the parts in the reverse order of removal with a new base gasket (J) and new O-rings (K). When installing the fuel tank unit, align the marks (L) on the unit (M) and the fuel tank (N).

Protected by Adobe

Fuel Tank Replacement

Removal

1. Relieve the fuel pressure (see page 11-245).
2. Drain the fuel tank (see page 11-248).
3. Loosen the rear wheel nuts slightly, then raise the vehicle, and make sure it is securely supported. Remove the rear wheels.
4. Release the parking brake.
5. Remove the fuel tank covers (A).

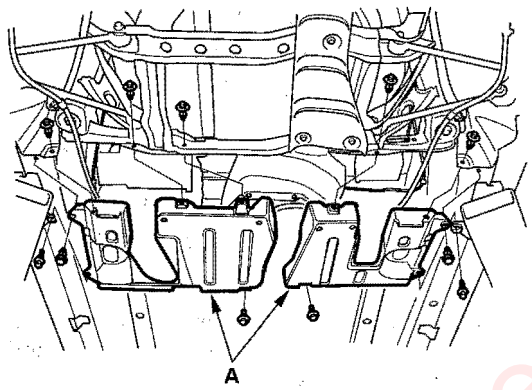

6. Remove the exhaust muffler (see page 9-6).
7. Disconnect the fuel fill neck tube (A) and breather hose (B).

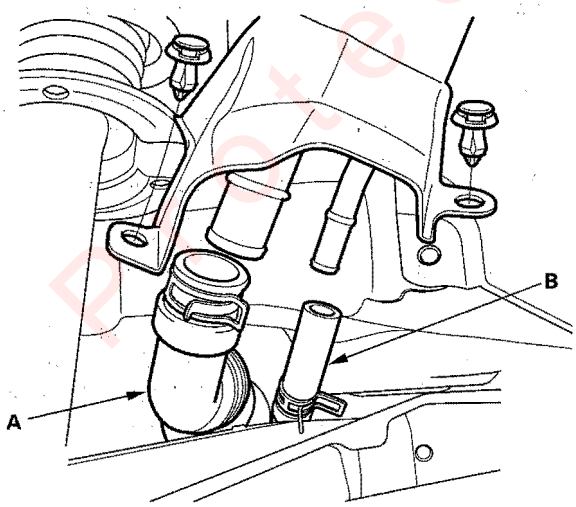

8. Disconnect the vapor line (A) from the EVAP canister (B). Then disconnect the fuel line (C).

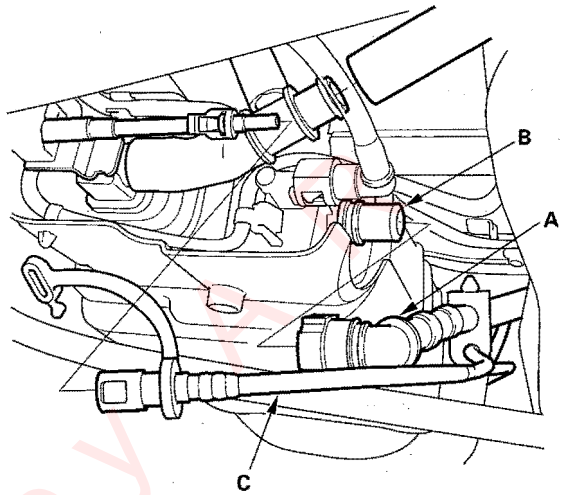

9. Disconnect the wheel sensor 2P connector (A).

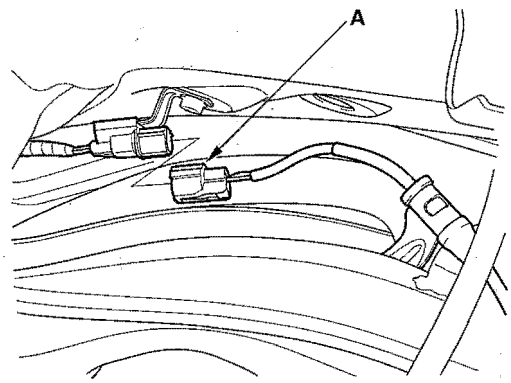

Protected by

10. Remove the two caliper bolts (A), and caliper body (B).

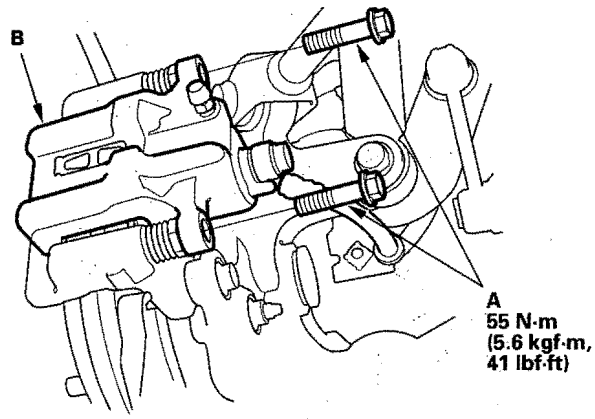

11. Remove the brake hose bracket (A).

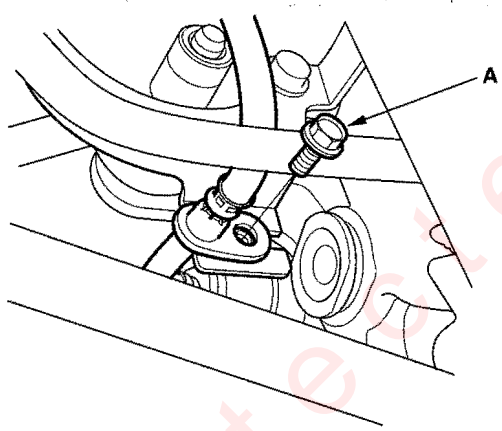

12. Hook the caliper body (A) on to the damper spring (B).

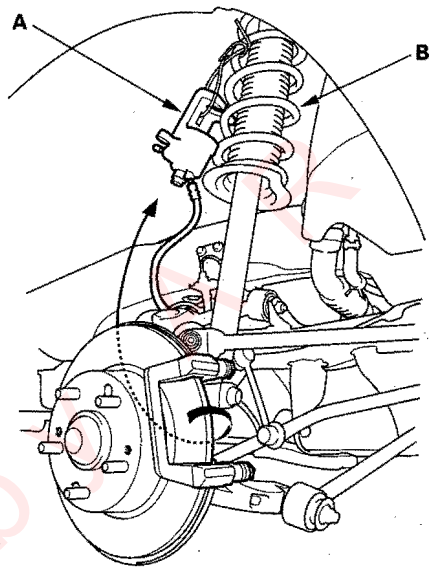

13. Remove the brake pads (see step 5 on page 19-26).
14. Remove the parking brake cable (see page 19-39).
15. Remove the flange bolt (A).

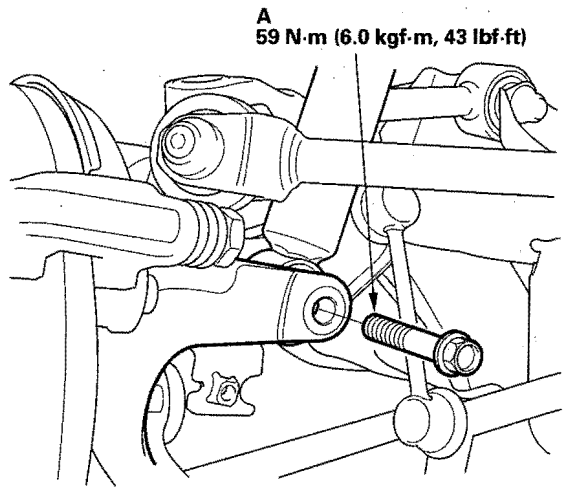

(cont'd)

Protected by

Fuel Tank Replacement (cont'd)

16. Remove the parking brake cable bracket bolt (A).

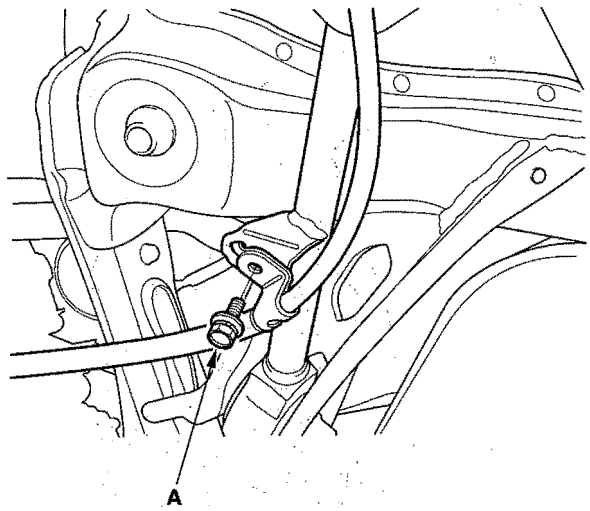

17. Remove the heat shield (A). Place a jack or support under the suspension subframe. Remove the mounting bolts (B). Remove the rear suspension subframe.

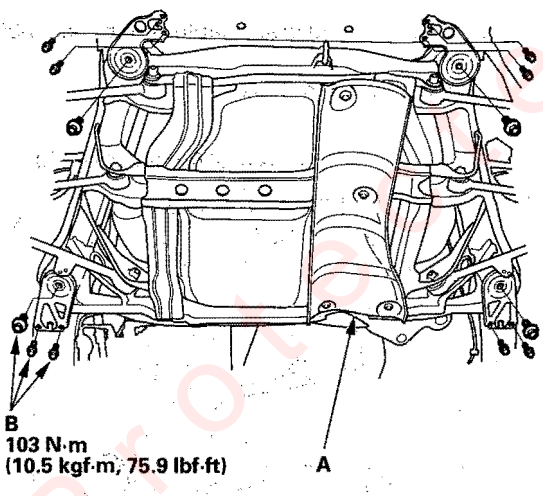

18. Remove the bolts (A) and the fuel tank straps (B).

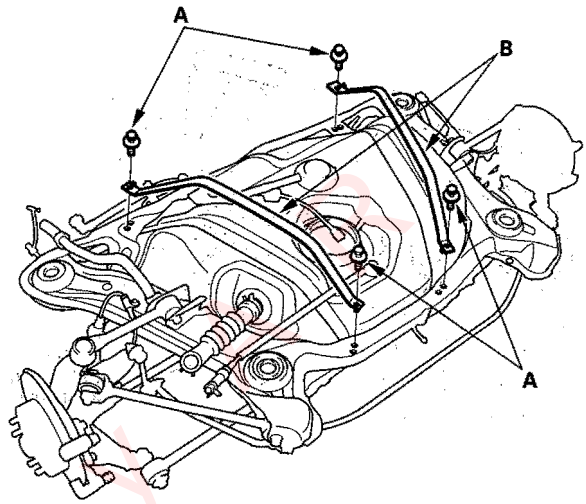

19. Lift the fuel tank out of the subframe.

Protected by

Installation

1. Install the tank straps (A), and tighten the bolts (B).

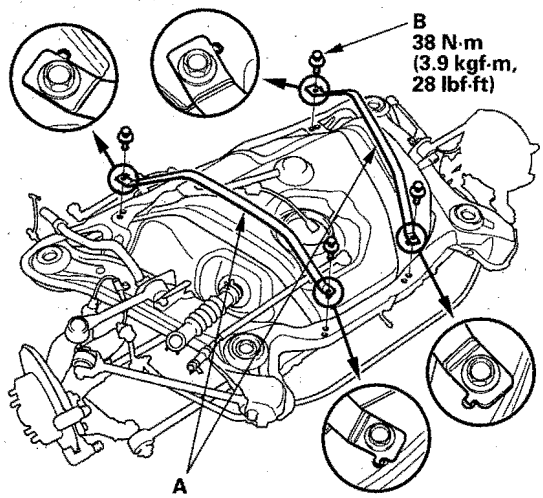

2. Place a jack or support under the rear suspension subframe. Install the rear suspension subframe, aligning the pins (A) with the holes in the subframe.

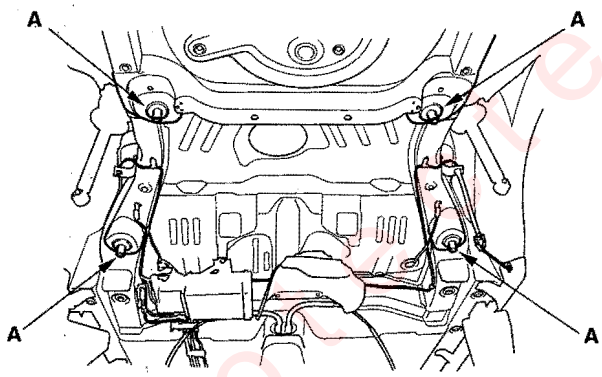

3. Install the remaining parts in the reverse order of removal.

4. After installation, do a wheel alignment (see page 18-5).

Produced by A R

Fuel Gauge Sending Unit Test

NOTE: For the fuel gauge system circuit diagram, refer to the Gauges Circuit Diagram (see page 22-256).

1. Before starting the fuel gauge sending unit test, do the B-CAN system diagnosis Test Mode A troubleshooting (see page 22-108).

   - If no problem is found, go to step 2.
   - If DTC B1175 is indicated, go to the indicated DTC troubleshooting.

2. Check the No. 21 METER (7.5A) fuse in the under-dash fuse/relay box before testing.

3. Do the gauge self-diagnostic function (see page 22-262).

   - If the fuel gauge needle sweeps from the minimum to maximum position and then returns to minimum, the gauge is OK. Go to step 4.
   - If the fuel gauge needle does not sweep correctly, replace the gauge control module and retest.

4. Turn the ignition switch OFF.

5. Remove the trunk floor.

6. Remove the access panel (A) from the floor.

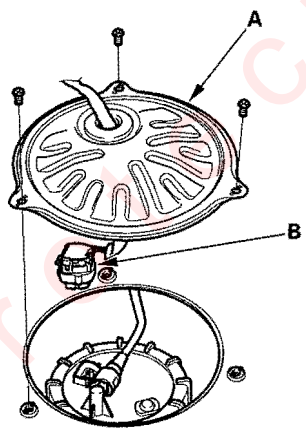

7. Disconnect the fuel pump 5P connector (B).

8. Remove the fuel tank unit from the fuel tank (see page 11-257).

9. Measure resistance between the No. 1 and No. 2 terminals with the float at E (EMPTY), 1/2 (HALF FULL), and F (FULL) positions.
   If you do not get the following readings, replace the fuel gauge sending unit (see page 11-257).

Float Position	F 7.6 in (191.4 mm)	1/2 4.4 in (113.1 mm)	LOW 2.0 in (52.4 mm)	E 0.8 in (25.6 mm)
Resistance (Ω)	19 to 21	205.5 to 215.5	487.9 to 617.1	770 to 790

NOTE: Remove the No. 15 BACK UP (40A) fuse from the under-hood fuse/relay box for at least 10 seconds after completing troubleshooting, otherwise it may take up to 20 minutes for the fuel gauge to indicate the correct fuel level.

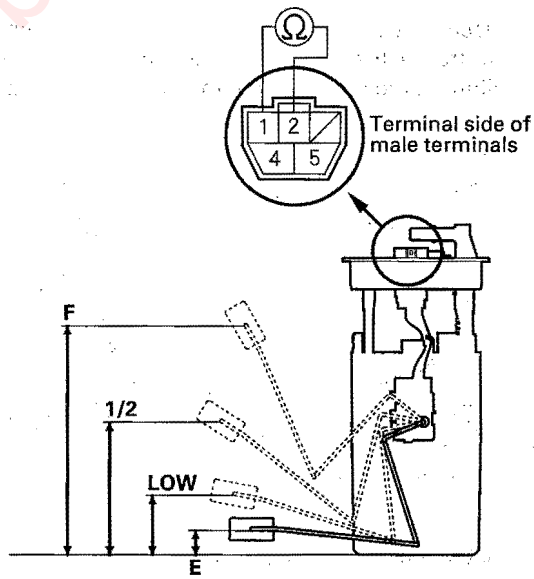

Protected by AR

Low Fuel Indicator Test

1. Do the gauge self-diagnostic function (see page 22-262).

   - If the low fuel indicator flashes, go to step 2.
   - If the low fuel indicator does not flash, replace the gauge control module.

2. Do the B-CAN system diagnosis troubleshooting Test Mode A (see page 22-108).

   - If any DTCs are indicated, do the indicated DTC troubleshooting.
   - If no DTCs are indicated, go to step 3.

3. Do the fuel gauge sending unit test (see page 11-262).

Protected by A R

Component Location Index

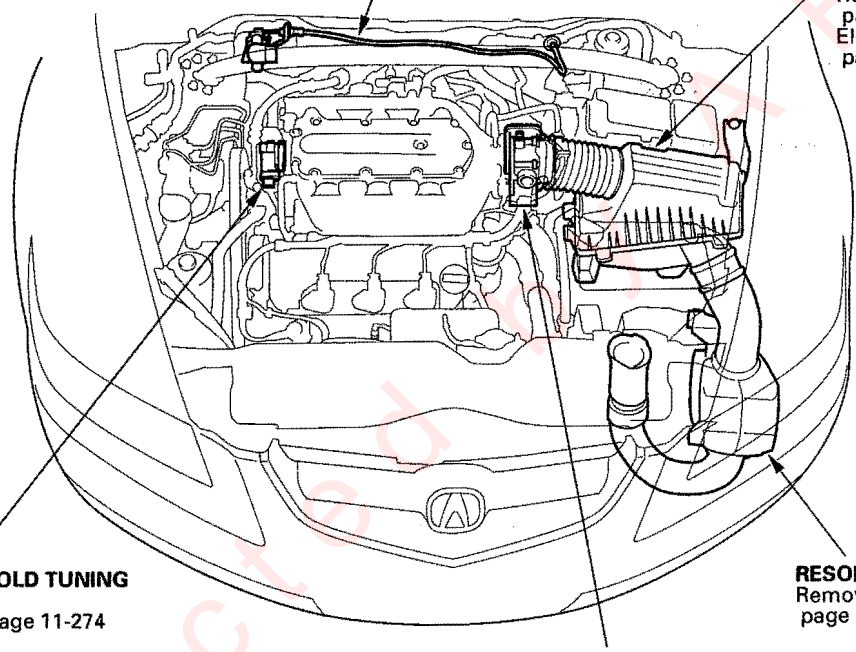

Protected by

DTC Troubleshooting

DTC P1077: IMT Valve Stuck Short

1. Start the engine, and let it idle.
2. Make sure the IMT VALVE CMD is OPEN in the DATA LIST with the HDS.
3. Check the IMT VALVE SW in the DATA LIST with the HDS.

   Is CLOSED indicated?

   YES—Go to step 4.

   NO—Intermittent failure, system is OK at this time. Check for poor connections or loose terminals at the IMT actuator and the ECM/PCM. ■
4. Turn the ignition switch OFF.
5. Disconnect the IMT actuator 5P connector.
6. Turn the ignition switch ON (II).
7. Check the IMT VALVE SW in the DATA LIST with the HDS.

   Is CLOSED indicated?

   YES—Go to step 12.

   NO—Go to step 8.
8. Turn the ignition switch OFF.
9. Jump the SCS line with the HDS.
10. Disconnect ECM/PCM connector B (24P).
11. Check for continuity between ECM/PCM connector terminal B11 and body ground.

ECM/PCM CONNECTOR B (24P)

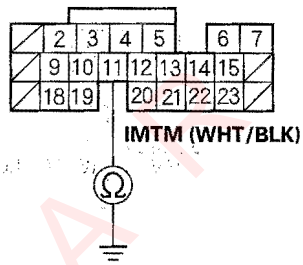

Wire side of female terminals

Is there continuity?

YES—Repair short in the wire between the ECM/PCM (B11) and the IMT actuator, then go to step 23.

NO—Go to step 29.

12. Turn the ignition switch OFF.
13. Jump the SCS line with the HDS.
14. Disconnect ECM/PCM connector B (24P).
15. Check for continuity between ECM/PCM connector terminal B4 and body ground.

ECM/PCM CONNECTOR B (24P)

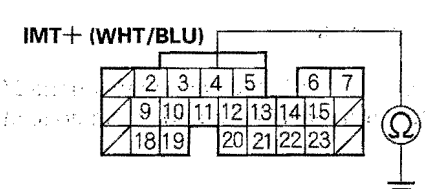

Wire side of female terminals

Is there continuity?

YES—Repair short in the wire between the ECM/PCM (B4) and the IMT actuator, then go to step 23.

NO—Go to step 16.

(cont'd)

Protected by AP

DTC Troubleshooting (cont'd)

16. Connect IMT actuator 5P connector terminal No. 5 to body ground with a jumper wire.

IMT ACTUATOR 5P CONNECTOR

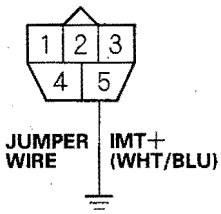

Wire side of female terminals

17. Check for continuity between ECM/PCM connector terminal B4 and body ground.

ECM/PCM CONNECTOR B (24P)

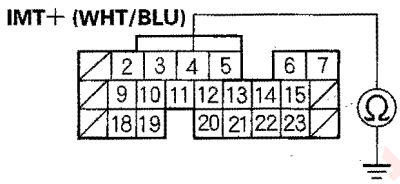

Wire side of female terminals

Is there continuity?

YES—Go to step 18.

NO—Repair open in the wire between the ECM/PCM (B4) and the IMT actuator, then go to step 23.

18. Check for continuity between ECM/PCM connector terminal B3 and body ground.

ECM/PCM CONNECTOR B (24P)

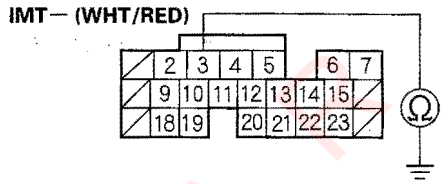

Wire side of female terminals

Is there continuity?

YES—Repair short in the wire between the ECM/PCM (B3) and the IMT actuator, then go to step 23.

NO—Go to step 19.

19. Connect IMT actuator 5P connector terminal No. 4 to body ground with a jumper wire.

IMT ACTUATOR 5P CONNECTOR

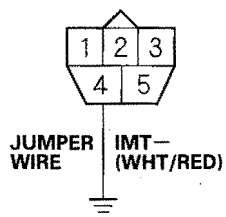

Wire side of female terminals

Protected by A

20. Check for continuity between ECM/PCM connector terminal B3 and body ground.

ECM/PCM CONNECTOR B (24P)

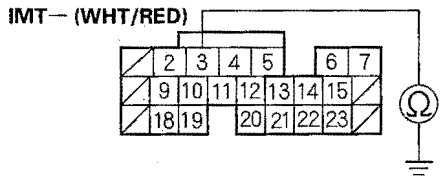

Wire side of female terminals

Is there continuity?

YES – Go to step 21.

NO – Repair open in the wire between the ECM/PCM (B3) and the IMT actuator, then go to step 23.

21. Remove the IMT actuator (see page 11-274).

22. Move the IMT valve by hand.

Does it move smoothly?

YES – Substitute a known-good IMT actuator (see page 11-274), then go to step 23 and recheck. If DTC P1077 is not indicated, replace the IMT actuator (see page 11-274), then go to step 23. If DTC P1077 is indicated, go to step 29.

NO – Remove the intake manifold upper cover (see step 1 on page 9-3), and repair the stuck valve. If necessary, replace the intake manifold (see page 9-4), then go to step 23.

23. Reconnect all connectors.

24. Turn the ignition switch ON (II).

25. Reset the ECM/PCM with the HDS.

26. Do the ECM/PCM idle learn procedure (see page 11-239).

27. Check for Temporary DTCs or DTCs with the HDS.

Are any Temporary DTCs or DTCs indicated?

YES – If DTC P1077 is indicated, check for poor connections or loose terminals at the IMT actuator and the ECM/PCM, then go to step 1. If any other Temporary DTCs or DTCs are indicated, go to the indicated DTC's troubleshooting.

NO – Go to step 28.

28. Monitor the OBD STATUS for DTC P1077 in the DTCs MENU with the HDS.

Does the screen indicate PASSED?

YES – Troubleshooting is complete. ■

NO – If the screen indicates FAILED, check for poor connections or loose terminals at the IMT actuator and the ECM/PCM, then go to step 1. If the screen indicates NOT COMPLETED, go to step 26 and recheck.

29. Update the ECM/PCM if it does not have the latest software, or substitute a known-good ECM/PCM (see page 11-6).

30. Check for Temporary DTCs or DTCs with the HDS.

Are any Temporary DTCs or DTCs indicated?

YES – If DTC P1077 is indicated, check for poor connections or loose terminals at the IMT actuator and the ECM/PCM, then go to step 1. If any other Temporary DTCs or DTCs are indicated, go to the indicated DTC's troubleshooting.

NO – If the ECM/PCM was updated, troubleshooting is complete. If the ECM/PCM was substituted, replace the original ECM/PCM (see page 11-171). ■

Protected by AP

DTC Troubleshooting (cont'd)

DTC P1078: IMT Valve Stuck Long

1. Turn the ignition switch ON (II).

   NOTE: Do not start the engine.

2. Make sure the IMT VALVE CMD is CLOSE in the DATA LIST with the HDS.

3. Check the IMT VALVE SW in the DATA LIST with the HDS.

   Is OPEN indicated?

   YES—Go to step 4.

   NO—Intermittent failure, system is OK at this time. Check for poor connections or loose terminals at the IMT actuator and the ECM/PCM. ■

4. Turn the ignition switch OFF.

5. Disconnect the IMT actuator 5P connector.

6. Turn the ignition switch ON (II).

7. Measure voltage between IMT actuator 5P connector terminal No. 1 and body ground.

IMT ACTUATOR 5P CONNECTOR

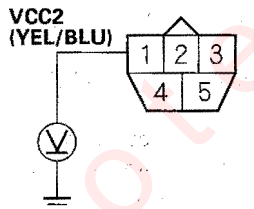

Wire side of female terminals

Is there about 5 V?

YES—Go to step 8.

NO—Repair open in the wire between the ECM/PCM (D12) and the IMT actuator, then go to step 25.

8. Measure voltage between IMT actuator 5P connector terminal No. 3 and body ground.

IMT ACTUATOR 5P CONNECTOR

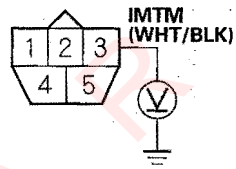

Wire side of female terminals

Is there about 5 V?

YES—Go to step 9.

NO—Go to step 14.

9. Turn the ignition switch OFF.

10. Jump the SCS line with the HDS.

11. Disconnect ECM/PCM connector D (17P).

12. Connect IMT actuator 5P connector terminal No. 2 to body ground with a jumper wire.

IMT ACTUATOR 5P CONNECTOR

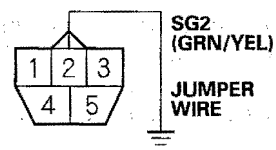

Wire side of female terminals

Protected by A R

13. Check for continuity between ECM/PCM connector terminal D10 and body ground.

ECM/PCM CONNECTOR D (17P)

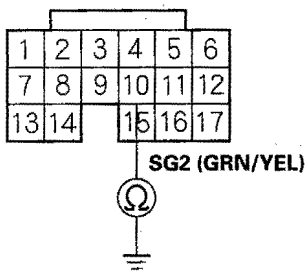

Wire side of female terminals

Is there continuity?

YES—Go to step 17.

NO—Repair open in the wire between the ECM/PCM (D10) and the IMT actuator, then go to step 25.

14. Disconnect ECM/PCM connector B (24P).

15. Connect IMT actuator 5P connector terminal No. 3 to body ground with a jumper wire.

IMT ACTUATOR 5P CONNECTOR

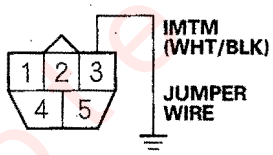

Wire side of female terminals

16. Check for continuity between ECM/PCM connector terminal B11 and body ground.

ECM/PCM CONNECTOR B (24P)

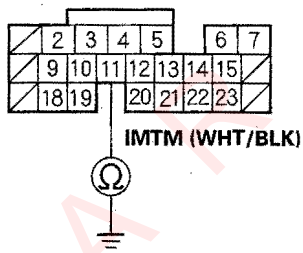

Wire side of female terminals

Is there continuity?

YES—Go to step 31.

NO—Repair open in the wire between the ECM/PCM (B11) and the IMT actuator, then go to step 25.

17. Check for continuity between ECM/PCM connector terminal B4 and body ground.

ECM/PCM CONNECTOR B (24P)

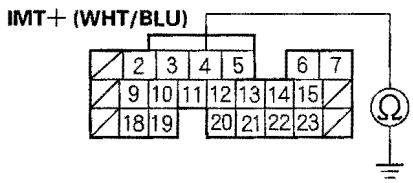

Wire side of female terminals

Is there continuity?

YES—Repair short in the wire between the ECM/PCM (B4) and the IMT actuator, then go to step 25.

NO—Go to step 18.

(cont'd)

Protected by A

DTC Troubleshooting (cont'd)

18. Connect IMT actuator 5P connector terminal No. 5 to body ground with a jumper wire.

IMT ACTUATOR 5P CONNECTOR

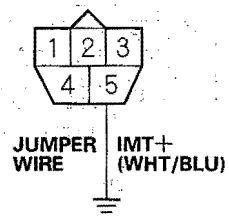

Wire side of female terminals

19. Check for continuity between ECM/PCM connector terminal B4 and body ground.

ECM/PCM CONNECTOR B (24P)

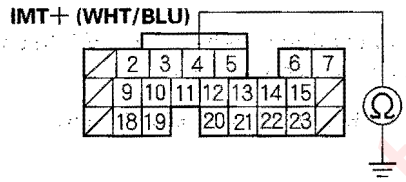

Wire side of female terminals

Is there continuity?

YES—Go to step 20.

NO—Repair open in the wire between the ECM/PCM (B4) and the IMT actuator, then go to step 25.

20. Check for continuity between ECM/PCM connector terminal B3 and body ground.

ECM/PCM CONNECTOR B (24P)

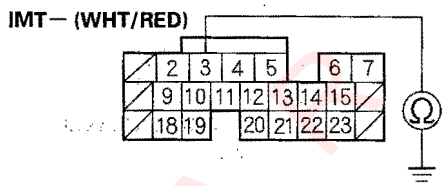

Wire side of female terminals

Is there continuity?

YES—Repair short in the wire between the ECM/PCM (B3) and the IMT actuator, then go to step 25.

NO—Go to step 21.

21. Connect IMT actuator 5P connector terminal No. 4 to body ground with a jumper wire.

IMT ACTUATOR 5P CONNECTOR

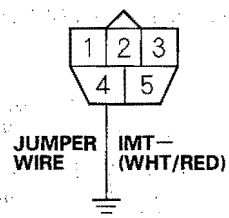

Wire side of female terminals

Protected by AI

22. Check for continuity between ECM/PCM connector terminal B3 and body ground.

ECM/PCM CONNECTOR B (24P)

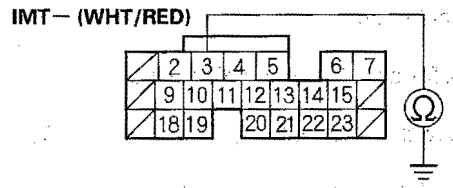

Wire side of female terminals

Is there continuity?

YES — Go to step 23.

NO — Repair open in the wire between the ECM/PCM (B3) and the IMT actuator, go to step 25.

23. Remove the IMT actuator (see page 11-274).

24. Move the IMT valve by hand.

Does it move smoothly?

YES — Substitute a known-good IMT actuator (see page 11-274), then go to step 25 and recheck. If DTC P1078 is not indicated, replace the IMT actuator (see page 11-274), then go to step 25. If DTC P1078 is indicated, then go to step 31.

NO — Remove the intake monifold upper cover (see step 1 on page 9-3), and repair the stuck valve. If necessary, replace the intake manifold (see page 9-4), then go to step 25.

25. Reconnect all connectors.

26. Turn the ignition switch ON (II).

27. Reset the ECM/PCM with the HDS.

28. Do the ECM/PCM idle learn procedure (see page 11-239).

29. Check for Temporary DTCs or DTCs with the HDS.

Are any Temporary DTCs or DTCs indicated?

YES — If DTC P1078 is indicated, check for poor connections or loose terminals at the IMT actuator and the ECM/PCM, then go to step 1. If any other Temporary DTCs or DTCs are indicated, go to the indicated DTC's troubleshooting.

NO — Go to step 30.

30. Monitor the OBD STATUS for DTC P1078 in the DTCs MENU with the HDS.

Does the screen indicate PASSED?

YES — Troubleshooting is complete. ■

NO — If the screen indicates FAILED, check for poor connections or loose terminals at the IMT actuator and the ECM/PCM, then go to step 1. If the screen indicates NOT COMPLETED, go to step 28 and recheck.

31. Update the ECM/PCM if it does not have the latest software, or substitute a known-good ECM/PCM (see page 11-6).

32. Check for Temporary DTCs or DTCs with the HDS.

Are any Temporary DTCs or DTCs indicated?

YES — If DTC P1078 is indicated, check for poor connections or loose terminals at the IMT actuator and the ECM/PCM, then go to step 1. If any other Temporary DTCs or DTCs are indicated, go to the indicated DTC's troubleshooting.

NO — If the ECM/PCM was updated, troubleshooting is complete. If the ECM/PCM was substituted, replace the original ECM/PCM (see page 11-171). ■

Protected by AP

Throttle Body Test

1. Connect the HDS to the data link connector (DLC) (A) located under the driver's side of the dashboard.

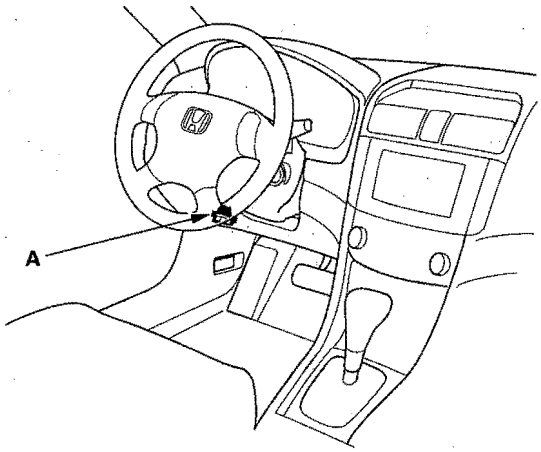

2. Start the engine. Hold the engine at 3,000 rpm with no load (in Park or neutral) until the radiator fan comes on, then let it idle.
3. Check the TP SENSOR A in the DATA LIST with the HDS. The reading should be above 2.73 %.
   - If it is not, clean the throttle body (see page 11-272).

Throttle Body Cleaning

⚠CAUTION

Do not insert your fingers into the installed throttle body when you turn the ignition switch ON (II) or while the ignition switch is ON (II). If you do, there will be serious injury to your fingers if the throttle body is activated.

1. Check for damage to the air cleaner.
2. Remove the throttle body (see page 11-277).
3. Wipe off the carbon from the throttle valve and inside the throttle body with a paper towel soaked in carburetor cleaner.

   NOTE:
   - Remove the throttle body before you clean it.
   - Be careful not to pinch your fingers.
   - To avoid removing the molybdenum coating, do not clean the bearing area of the throttle shaft (A).
   - Do not spray carburetor cleaner directly on the throttle body.
   - Use Honda genuine carburetor cleaner.

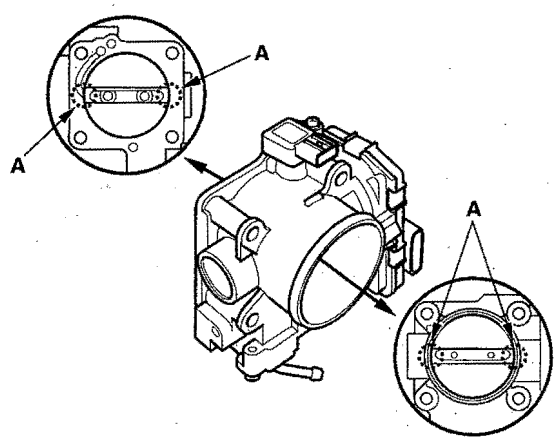

4. Install the throttle body (see page 11-277).
5. Reset the ECM/PCM with the HDS.
6. Turn the ignition switch ON (II), and wait for 2 seconds.
7. Do the ECM/PCM idle learn procedure (see page 11-239).

Protected by AR

Air Cleaner Removal/Installation

1. Remove the bolts (A) and clamps (B).

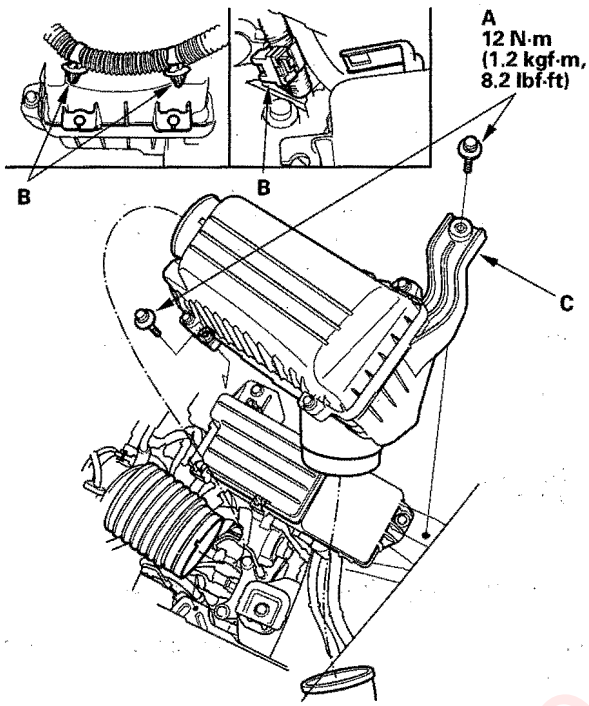

2. Remove the air cleaner (C).

3. Install the parts in the reverse order of removal.

Air Cleaner Element Replacement

NOTE: Do not use compressed air to clean the air cleaner element.

1. Open the air cleaner housing cover (A) and remove the clamps (B).

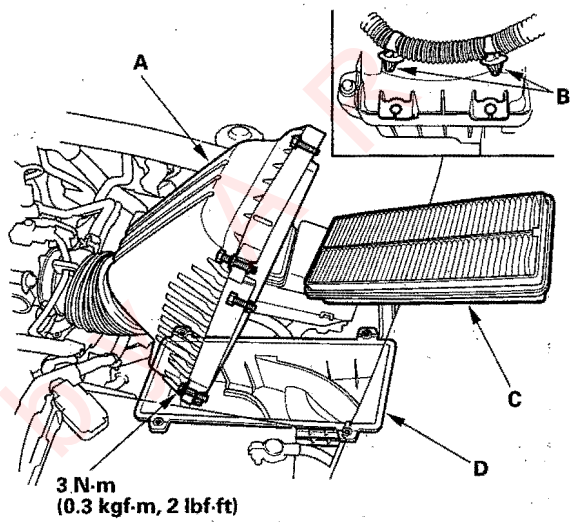

2. Remove the air cleaner (C) from the air cleaner housing (D).

3. Install the parts in the reverse order of removal.

Protected by AP

Resonator Removal/Installation

1. Remove the front bumper (see page 20-118).
2. Remove the bolts (A), and cover (B).

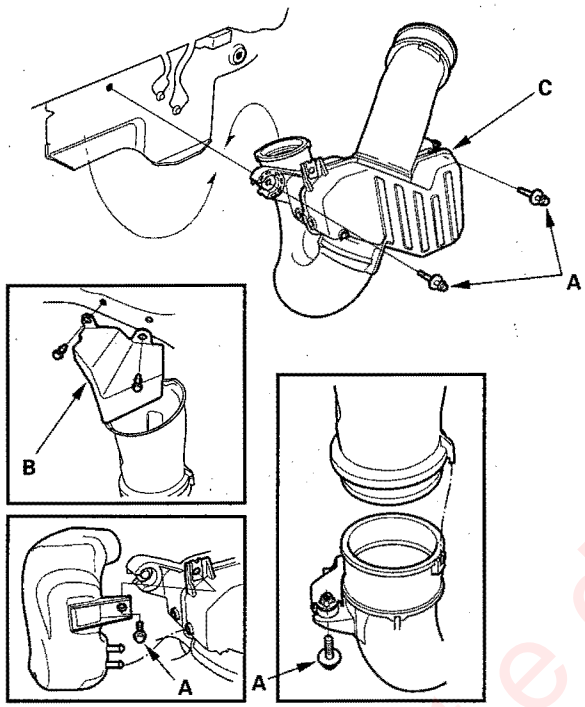

3. Remove the resonator (C).
4. Install the parts in the reverse order of removal.

IMT Actuator Replacement

1. Remove the intake manifold cover (see step 1 on page 9-3).
2. Disconnect the IMT actuator 5P connector (A).

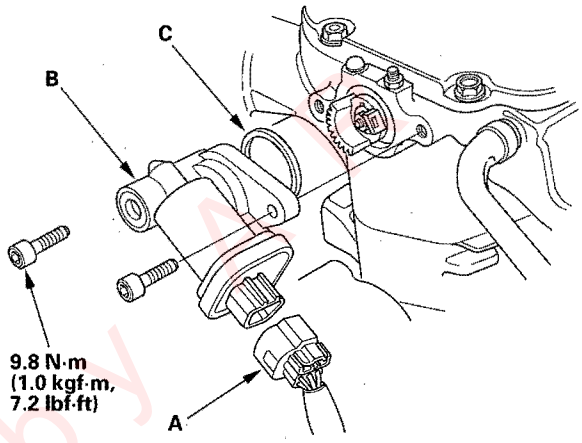

3. Remove the bolts and the IMT actuator (B).
4. Install the actuator in the reverse order of removal with a new O-ring (C).

Protected by

Throttle Cable Adjustment

1. Remove the throttle cable cover (A).

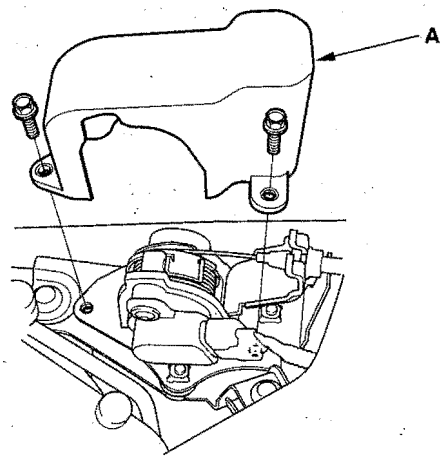

2. Check cable free play at the accelerator pedal position sensor.
   Cable free play (A) should be 10 – 12 mm, (3/8 – 1/2 in.).

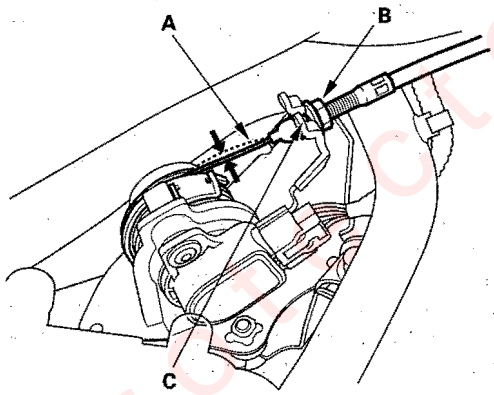

3. If free play (A) is not within spec (10–12 mm, 3/8–1/2 in.), loosen the locknut (B), turn the adjusting nut (C) until the deflection (A) is as specified, then retighten the locknut (B).

4. With the cable properly adjusted, check the throttl valve to be sure it goes to the full open stop when you push the accelerator pedal to the floor. Also check the throttle valve to be sure it returns to the idle position stop whenever you release the accelerator pedal.

Protected by AR

Throttle Cable Removal/Installation

1. Remove the throttle cable cover (see page 11-216).
2. Fully open the accelerator pedal position, then remove the throttle cable (A) from the throttle link (B).

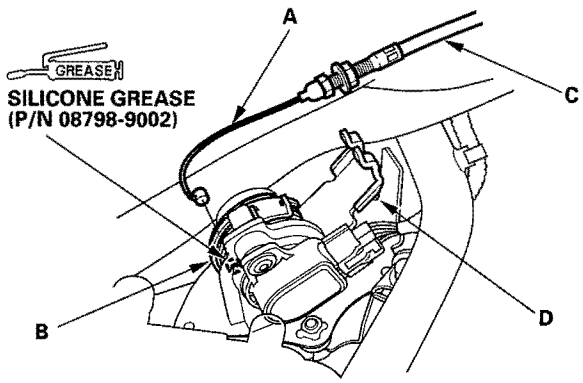

3. Remove the cable housing (C) from the cable bracket (D).
4. Remove the throttle cable (A) from the accelerator pedal (B).

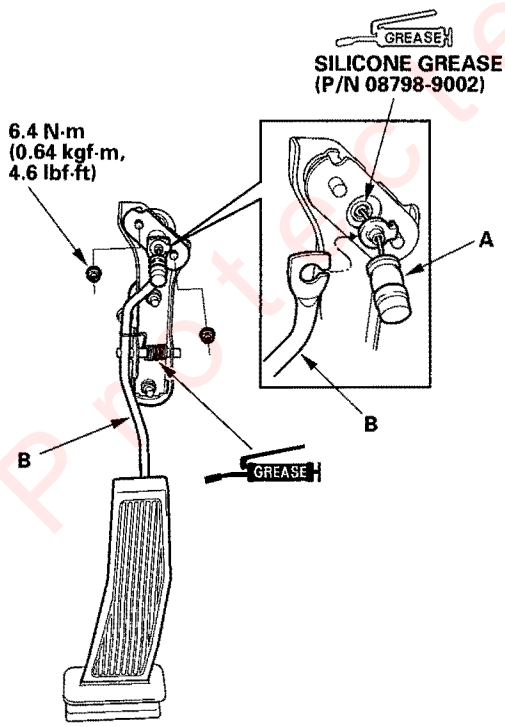

5. Install the cable in the reverse order of removal.
6. Start the engine. Hold the engine at 3,000 rpm with no load (in Park or neutral) until the radiator fan comes on, then let it idle.
7. Hold the cable, removing all slack from it.
8. Set the cable on the bracket (A). Adjust the adjusting nut (B) so that its free play is 0 mm.

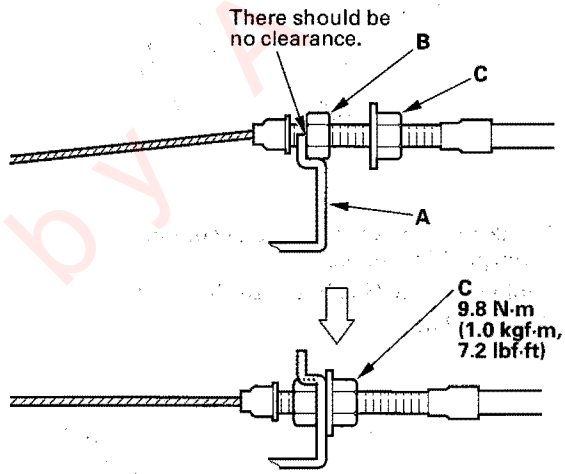

9. Position the adjusting nut on the other side of the bracket (A), then tighten the locknut (C).
10. With the cable properly adjusted, check the accelerator pedal position to be sure it goes to the full open stop fully when you push the accelerator pedal to the floor. Also check the accelerator pedal position to be sure it returns to the idle position stop whenever you release the accelerator pedal.

Protected by ARA

Throttle Body Removal/Installation

⚠CAUTION

Do not insert your fingers into the installed throttle body when you turn the ignition switch ON (II) or while the ignition switch is ON (II). If you do, there will be serious injury to your fingers if the throttle valve is activated.

1. Disconnect the MAP sensor connector (A).

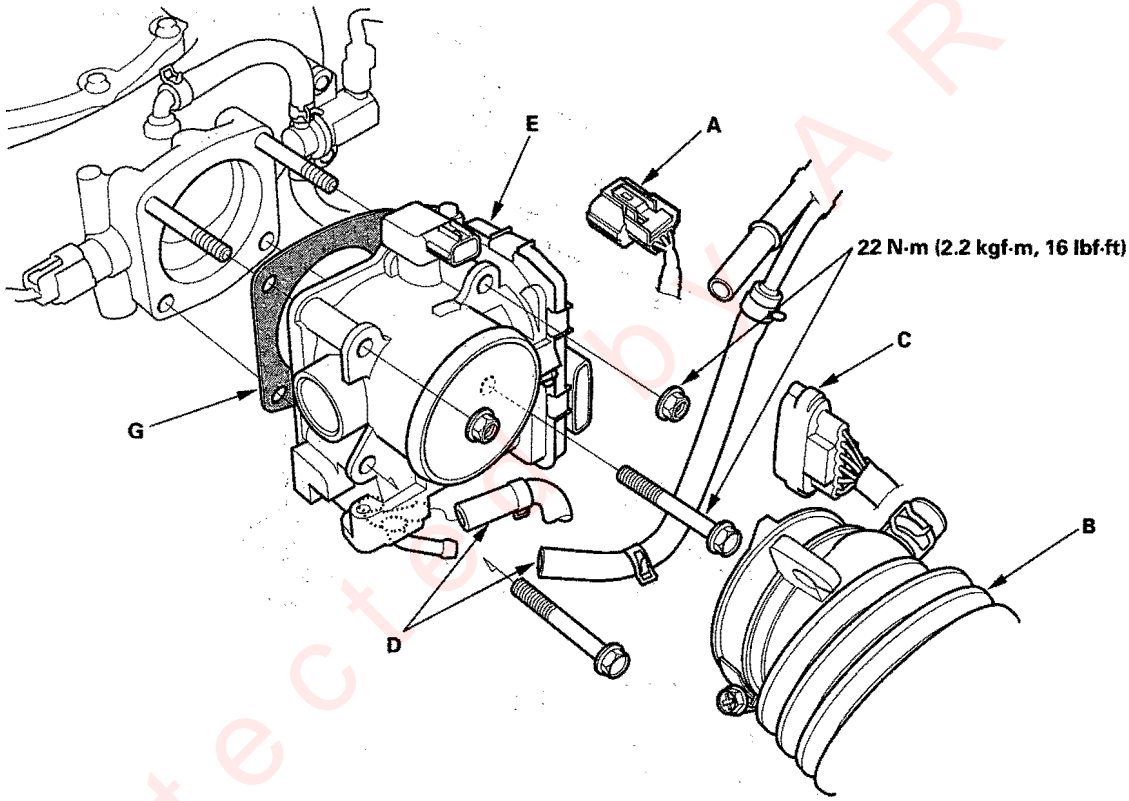

2. Remove the intake air duct (B).
3. Disconnect the throttle body connector (C).
4. Disconnect the water bypass hoses (D), and plug the water bypass hoses.
5. Remove the throttle body (E).
6. Install the parts in the reverse order of removal with a new gasket (G), then check these items:
   - Do the ECM/PCM idle learn procedure after the throttle body has been replaced (see page 11-239).
   - Refill the radiator with engine coolant (see page 10-6).

Protected by ARR

Throttle Body Disassembly/Reassembly

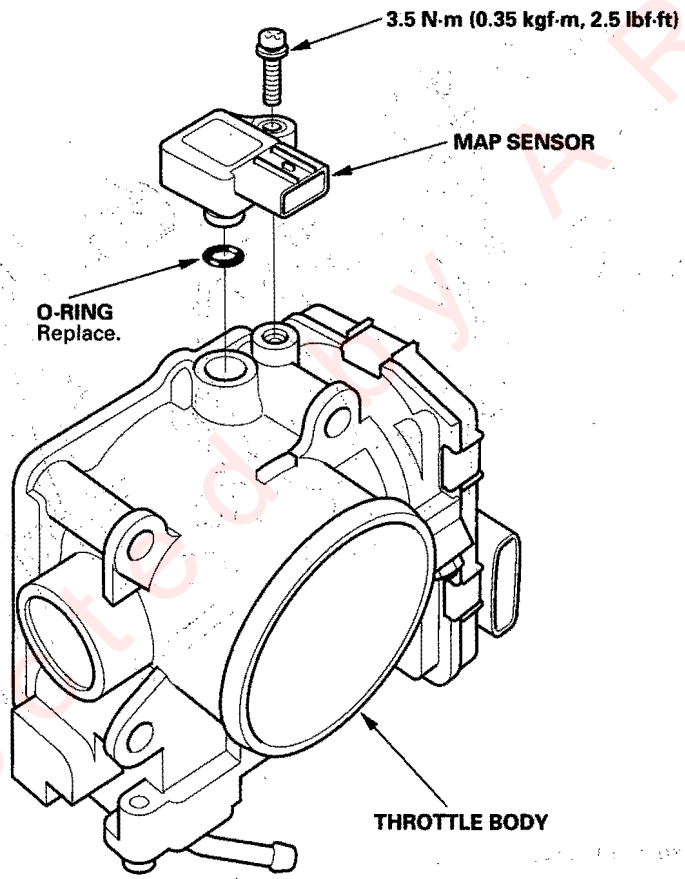

Protected by AR

DTC Troubleshooting

DTC P0420: Rear Bank Catalyst System Efficiency Below Threshold (Bank 1)

DTC P0430: Front Bank Catalyst System Efficiency Below Threshold (Bank 2)

NOTE:
- If some of the DTCs listed below are stored at the same time as DTC P0420 and/or P0430*, troubleshoot those DTCs first, then recheck for DTC P0420 and/or P0430*.
  P0137, P0138, P0157, P0158: Secondary HO2S (Sensor 2)
  P0141, P0161: Secondary HO2S (Sensor 2) Heater
- Poor quality fuel can cause these DTCs.
- Information marked with an asterisk (*) applies to the front bank (Bank 2).

1. Turn the ignition switch ON (II).
2. Clear the DTC with the HDS.
3. Start the engine. Hold the engine speed at 3,000 rpm with no load (in Park or neutral) until the radiator fan comes on, then let it idle.
4. Test-drive under these conditions:
   - Engine coolant temperature more than 158°F (70°C)
   - A/T in D position (M/T in 5th gear)
   - Vehicle speed between 50 mph (80 km/h) and 55 mph (88 km/h) with cruise control set
   - Drive about 2 minutes, decelerate for at least 4 seconds with the throttle completely closed, then maintain 55 mph (88 km/h) for 20 minutes with cruise control set
5. Monitor the OBD STATUS for DTC P0420 and/or P0430* in the DTCs MENU with the HDS.

   Does the screen indicate EXECUTING?

   YES—Go to step 6.

   NO—Go to step 4 and recheck.
6. Continue test driving until a result comes on.
7. Monitor the OBD STATUS for DTC P0420 and/or P0430* in the DTCs MENU with the HDS.

   Does the screen indicate FAILED?

   YES—Go to step 8.

   NO—If the screen indicates PASSED, intermittent failure, system is OK at this time. If the screen indicates EXECUTING, keep driving until a result comes on. If the screen indicates OUT OF CONDITION, go to step 4 and recheck.
8. Turn the ignition switch OFF.
9. Replace the TWC (see page 11-281).
10. Turn the ignition switch ON (II).
11. Reset the ECM/PCM with the HDS.
12. Do the ECM/PCM idle learn procedure (see page 11-239).

(cont'd)

Protected by AR

DTC Troubleshooting (cont'd)

13. Start the engine. Hold the engine speed at 3,000 rpm with no load (in Park or neutral) until the radiator fan comes on, then let it idle.

14. Test-drive for about 10 minutes, continually changing the vehicle speed.

15. Check the CAT MONITOR CONDITTION in the DATA LIST with the HDS.

    Is the temperature OK?

    YES—Go to step 16.

    NO—Go to step 13 and recheck.

16. Test-drive under these conditions:

    - Engine coolant temperature more than 158°F (70°C)
    - A/T in D position (M/T in 5th gear)
    - Vehicle speed between 50 mph (80 km/h) and 55 mph (88 km/h) with cruise control set
    - Drive about 2 minutes, decelerate for at least 4 seconds with the throttle completely closed, then maintain 55 mph (88 km/h) for 20 minutes with cruise control set

17. Monitor the OBD STATUS for DTC P0420 and/or P0430* in the DTCs MENU with the HDS.

    Does the screen indicate EXECUTING?

    YES—Go to step 18.

    NO—Go to step 16 and recheck.

18. Continue test driving until a result comes on.

19. Check for Temporary DTCs or DTCs with the HDS.

    Are any Temporary DTCs or DTCs indicated?

    YES—Go to the indicated DTC's troubleshooting.■

    NO—Go to step 20.

20. Monitor the OBD STATUS for DTC P0420 and/or P0430* in the DTCs MENU with the HDS.

    Does the screen indicate PASSED?

    YES—Troubleshooting is complete.■

    NO—If the screen indicates FAILED, check the fuel quality. If the screen indicates EXECUTING, keep driving until a result comes on. If the screen indicates OUT OF CONDITION, go to step 13 and recheck.

Protected by A.P.

Warm Up TWC Removal/Installation

FRONT

1. Remove the condenser fan shroud (see page 10-10).
2. Disconnect the front fuel air ratio (A/F) sensor connector and front secondary heated oxygen sensor (secondary HO2S) connector.
3. Remove the front WU-TWC.

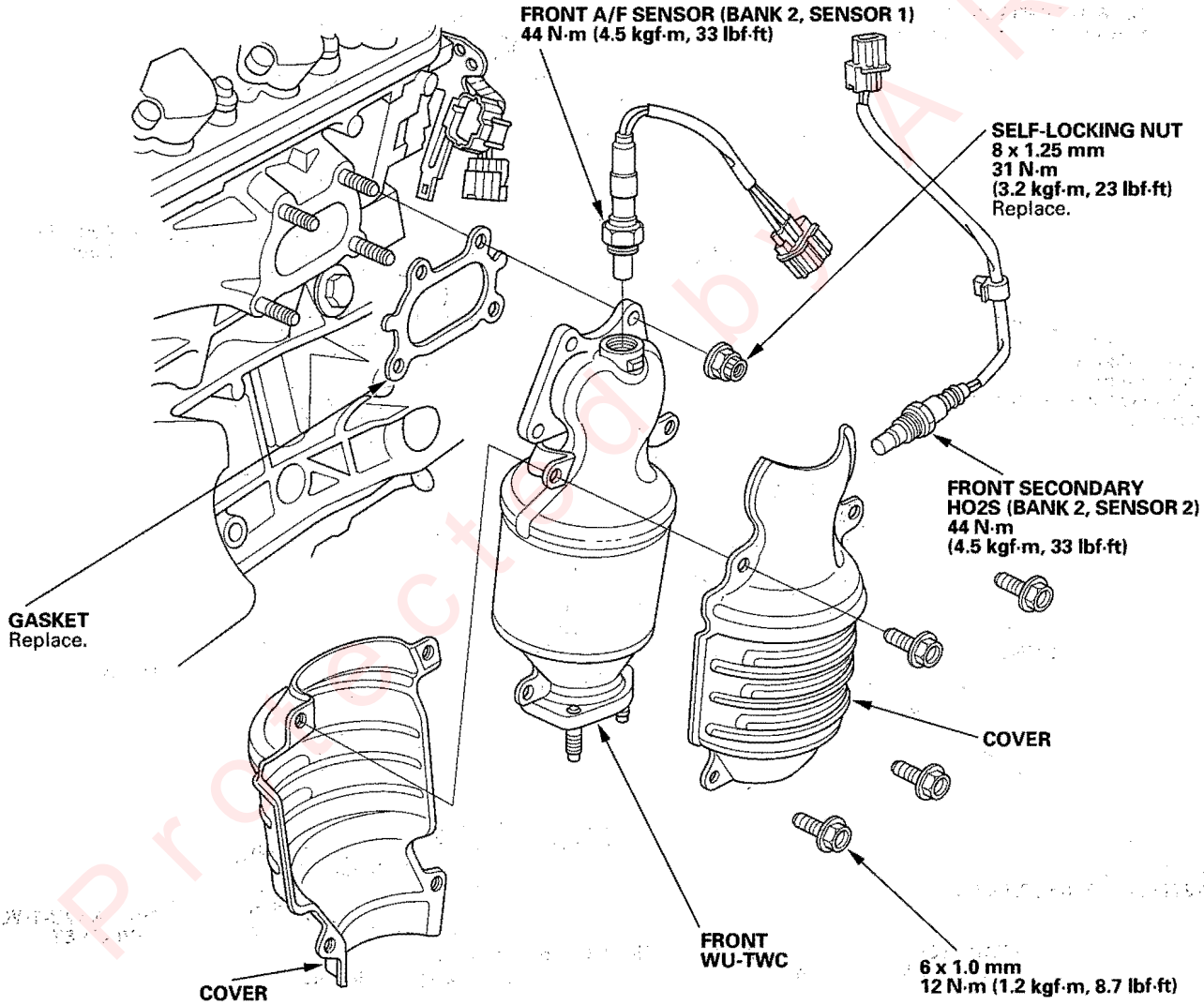

4. Install the front WU-TWC, and tighten the nuts in a crisscross pattern in two or three steps.
5. Install the other parts in the reverse order of removal.

(cont'd)

Warm Up TWC Removal/Installation (cont'd)

REAR

1. Remove the intermediate shaft (see page 16-21).
2. Disconnect the rear air fuel ratio (A/F) sensor connector and rear secondary heated oxygen sensor (secondary HO2S) connector.
3. Remove the rear WU-TWC bracket, then remove the rear WU-TWC.

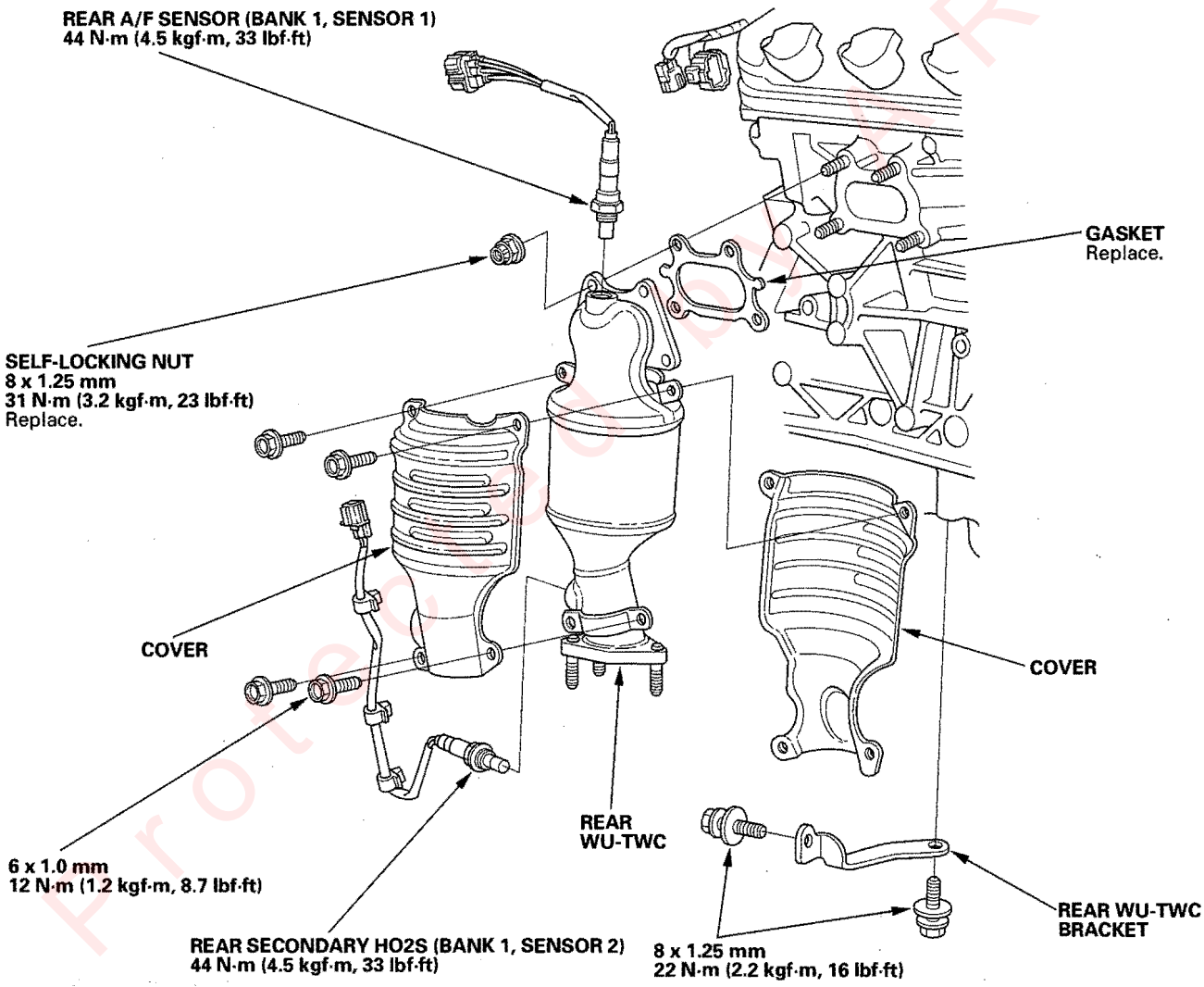

4. Install the rear WU-TWC, and tighten the nuts in a crisscross pattern in two or three steps.
5. Install the other parts in the reverse order of removal.

Protected by FAIR

Component Location Index

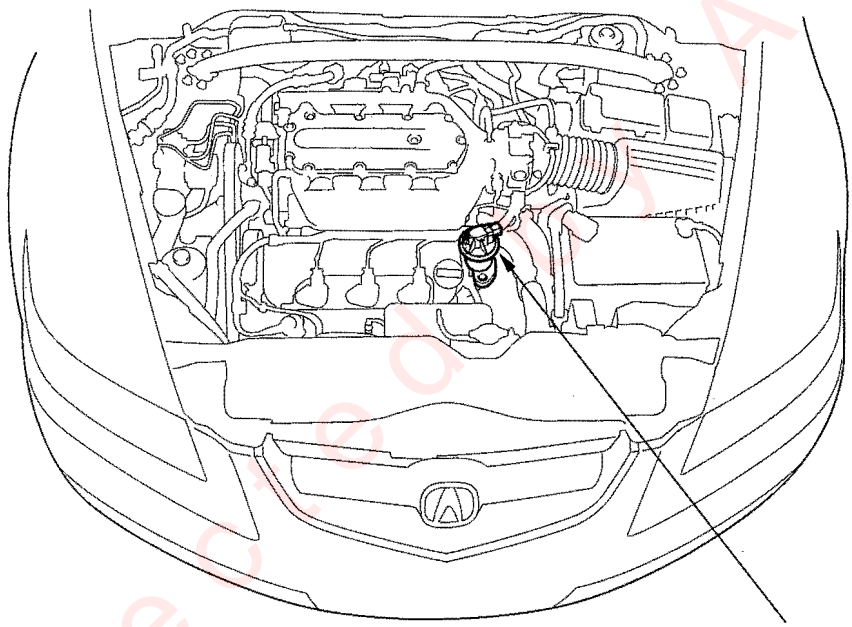

EXHAUST GAS RECIRCULATION (EGR) VALVE
Replacement, page 11-295

Protected by A R

DTC Troubleshooting

DTC P0401: EGR Insufficient Flow

1. Turn the ignition switch ON (II).
2. Clear the DTC with the HDS.
3. Start the engine. Hold the engine speed at 3,000 rpm with no load (in Park or neutral) until the radiator fan comes on, then let it idle.
4. Do the EGR TEST in the INSPECTION MENU with the HDS.

   Is the result OK?

   YES—Go to step 5.

   NO—Go to step 7.
5. Test-drive under these conditions:

   - Engine coolant temperature more than 158°F (70°C)
   - A/T in D position (M/T in 4th gear)
   - Vehicle speed at 25 mph (40 km/h) or more, and engine speed between 1,100 rpm and 3,000 rpm
   - During the drive, decelerate (with the throttle fully closed) for 5 seconds
6. Monitor the OBD STATUS for DTC P0401 in the DTCs MENU with the HDS.

   Does the screen indicate FAILED?

   YES—Remove the intake manifold upper cover (see step 1 on page 9-3), and clean the intake manifold EGR port with carburetor cleaner, then go to step 9.

   NO—If the screen indicates PASSED, intermittent failure, system is OK at this time. If the screen indicates EXECUTING, keep driving until a result comes on. If the screen indicates OUT OF CONDITION, go to step 5 and recheck.
7. Turn the ignition switch OFF.
8. Replace the EGR valve (see page 11-295).
9. Turn the ignition switch ON (II).
10. Reset the ECM/PCM with the HDS.
11. Do the ECM/PCM idle learn procedure (see page 11-239).
12. Test-drive under these conditions:

    - Engine coolant temperature more than 158°F (70°C)
    - A/T in D position (M/T in 4th gear)
    - Vehicle speed at 25 mph (40 km/h) or more, and engine speed between 1,100 rpm and 3,000 rpm
    - During the drive, decelerate (with the throttle fully closed) for 5 seconds
13. Check for Temporary DTCs or DTCs with the HDS.

    Are any Temporary DTCs or DTCs indicated?

    YES—If DTC P0401 is indicated, check for poor connections or loose terminals at the EGR valve and the ECM/PCM, then go to step 1. If the connections are OK, go to step 15. If any other Temporary DTCs or DTCs are indicated, go to the indicated DTC's troubleshooting.

    NO—Go to step 14.
14. Monitor the OBD STATUS for DTC P0401 in the DTCs MENU with the HDS.

    Does the screen indicate PASSED?

    YES—Troubleshooting is complete.■

    NO—If the screen indicates FAILED, go to step 1 and recheck. If the screen indicates EXECUTING, keep driving until a result comes on. If the screen indicates OUT OF CONDITION, go to step 12 and recheck.

Protected by FSR

15. Update the ECM/PCM if it does not have the latest software, or substitute a known-good ECM/PCM (see page 11-6).

16. Test-drive under these conditions:

    - Engine coolant temperature more than 158°F (70°C)
    - A/T in D position (M/T in 4th gear)
    - Vehicle speed at 25 mph (40 km/h) or more, and engine speed between 1,100 rpm and 3,000 rpm
    - During the drive, decelerate (with the throttle fully closed) for 5 seconds

17. Check for Temporary DTCs or DTCs with the HDS.

    Are any Temporary DTCs or DTCs indicated?

    YES—If DTC P0401 is indicated, check for poor connections or loose terminals at the EGR valve and the ECM/PCM, then go to step 1. If any other Temporary DTCs or DTCs are indicated, go to the indicated DTC's troubleshooting.

    NO—If the ECM/PCM was updated, troubleshooting is complete. If the ECM/PCM was substituted, replace the original ECM/PCM (see page 11-171). ■

Protected by AR

DTC Troubleshooting (cont'd)

DTC P0404: EGR Control Circuit Range/ Performance Problem

1. Turn the ignition switch ON (II).
2. Clear the DTC with the HDS.
3. Start the engine. Hold the engine speed at 3,000 rpm with no load (in Park or neutral) until the radiator fan comes on, then let it idle.
4. Do the EGR TEST in the INSPECTION MENU with the HDS.

   Is the result OK?

   YES—Intermittent failure, system is OK at this time. Clean any carbon build-up on the EGR valve with carburetor cleaner. ■

   NO—Go to step 5.
5. Turn the ignition switch OFF.
6. Disconnect the EGR valve 6P connector.
7. At the sensor side, measure resistance between EGR valve 6P connector terminals No. 1 and No. 2.

EGR VALVE 6P CONNECTOR

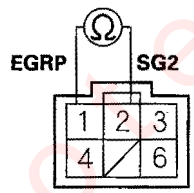

Terminal side of male terminals

Is there 100 kΩ or more?

YES—Go to step 26.

NO—Go to step 8.

8. Measure resistance between EGR valve 6P connector terminals No. 1 and No. 3.

EGR VALVE 6P CONNECTOR

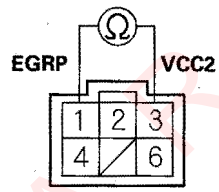

Terminal side of male terminals

Is there 100 kΩ or more?

YES—Go to step 26.

NO—Go to step 9.

9. Check for continuity between EGR valve 6P connector terminal No. 6 and body ground.

EGR VALVE 6P CONNECTOR

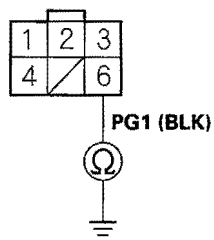

Wire side of female terminals

Is there continuity?

YES—Go to step 10.

NO—Repair open in the wire between the EGR valve and G101, then go to step 27.

Protected by ARK

10. Jump the SCS line with the HDS.

11. Disconnect ECM/PCM connector B (24P).

12. Check for continuity between ECM/PCM connector terminal B5 and body ground.

ECM/PCM CONNECTOR B (24P)

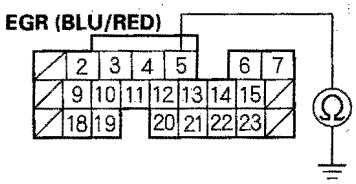

Wire side of female terminals

Is there continuity?

YES – Repair short in the wire between the ECM/PCM (B5) and the EGR valve, then go to step 27.

NO – Go to step 13.

13. Connect EGR valve 6P connector terminal No. 4 to body ground with a jumper wire.

EGR VALVE 6P CONNECTOR

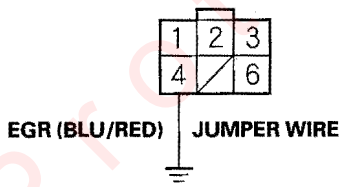

Wire side of female terminals

14. Check for continuity between ECM/PCM connector terminal B5 and body ground.

ECM/PCM CONNECTOR B (24P)

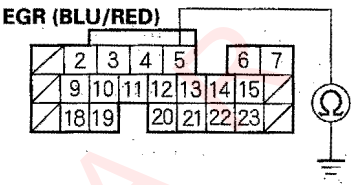

Wire side of female terminals

Is there continuity?

YES – Go to step 15.

NO – Repair open in the wire between the ECM/PCM (B5) and the EGR valve, then go to step 27.

15. Remove the EGR valve (see page 11-295).

16. Clean the intake manifold EGR port with carburetor cleaner. Also, clean the passage inside the EGR valve with carburetor cleaner.

17. Install the EGR valve (see page 11-295).

18. Reconnect the EGR valve 6P connector.

19. Reconnect ECM/PCM connector B (24P).

(cont'd)

Protected by A

DTC Troubleshooting (cont'd)

20. Turn the ignition switch ON (II).

21. Reset the ECM/PCM with the HDS.

22. Do the ECM/PCM idle learn procedure (see page 11-239).

23. Start the engine. Hold the engine speed at 3,000 rpm with no load (in Park or neutral) until the radiator fan comes on, then let it idle.

24. Do the EGR TEST in the INSPECTION MENU with the HDS.

    Is the result OK?

    YES—Go to step 32.

    NO—Go to step 25.

25. Turn the ignition switch OFF.

26. Replace the EGR valve (see page 11-295).

27. Turn the ignition switch ON (II).

28. Reset the ECM/PCM with the HDS.

29. Do the ECM/PCM idle learn procedure (see page 11-239).

30. Start the engine. Hold the engine speed at 3,000 rpm with no load (in Park or neutral) until the radiator fan comes on, then let it idle.

31. Do the EGR TEST in the INSPECTION MENU with the HDS.

32. Check for Temporary DTCs or DTCs with the HDS.

    Are any Temporary DTCs or DTCs indicated?

    YES—If DTC P0404 is indicated, check for poor connections or loose terminals at the EGR valve and the ECM/PCM, then go to step 1. If the connections and terminals are OK, go to step 34. If any other Temporary DTCs or DTCs are indicated, go to the indicated DTC's troubleshooting.

    NO—Go to step 33.

33. Monitor the OBD STATUS for DTC P0404 in the DTCs MENU with the HDS.

    Does the screen indicate PASSED?

    YES—Troubleshooting is complete. ■

    NO—If the screen indicates FAILED, go to step 1 and recheck. If the screen indicates EXECUTING, keep driving until a result comes on. If the screen indicates OUT OF CONDITION, go to step 30 and recheck.

34. Update the ECM/PCM if it does not have the latest software, or substitute a known-good ECM/PCM (see page 11-6).

35. Do the EGR TEST in the INSPECTION MENU with the HDS.

36. Check for Temporary DTCs or DTCs with the HDS.

    Are any Temporary DTCs or DTCs indicated?

    YES—If DTC P0404 is indicated, check for poor connections or loose terminals at the EGR valve and the ECM/PCM, then go to step 1. If any other Temporary DTCs or DTCs are indicated, go to the indicated DTC's troubleshooting.

    NO—If the ECM/PCM was updated, troubleshooting is complete. If the ECM/PCM was substituted, replace the original ECM/PCM (see page 11-171). ■

Protected by AR

DTC P0406: EGR Valve Position Sensor Circuit High Voltage

1. Turn the ignition switch ON (II).
2. Check the EGR VLS in the DATA LIST with the HDS.

   Is 4.88 V or higher indicated?

   YES—Go to step 3.

   NO—Intermittent failure, system is OK at this time. Check for poor connections or loose terminals at the EGR valve and the ECM/PCM. ■
3. Turn the ignition switch OFF.
4. Disconnect the EGR valve 6P connector.
5. Turn the ignition switch ON (II).
6. Measure voltage between EGR valve 6P connector terminals No. 2 and No. 3.

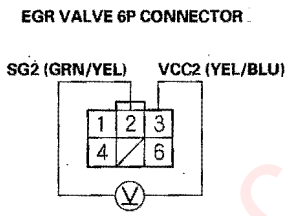

Wire side of female terminals

   Is there about 5 V?

   YES—Go to step 8.

   NO—Go to step 7.
7. Measure voltage between ECM/PCM connector terminals D12 and D10.

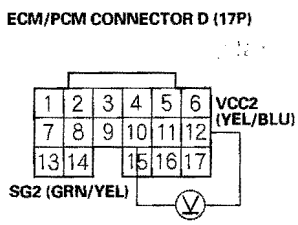

Wire side of female terminals

   Is there about 5 V?

   YES—Repair open in the wire between the EGR valve and the ECM/PCM (D10), then go to step 10.

   NO—Go to step 14.
8. Turn the ignition switch OFF.
9. Replace the EGR valve (see page 11-295).
10. Turn the ignition switch ON (II).
11. Reset the ECM/PCM with the HDS.
12. Do the ECM/PCM idle learn procedure (see page 11-239).
13. Check for Temporary DTCs or DTCs with the HDS.

    Are any Temporary DTCs or DTCs indicated?

    YES—If DTC P0406 is indicated, check for poor connections or loose terminals at the EGR valve and the ECM/PCM, then go to step 1. If any other Temporary DTCs or DTCs are indicated, go to the indicated DTC's troubleshooting.

    NO—Troubleshooting is complete. ■
14. Update the ECM/PCM if it does not have the latest software, or substitute a known-good ECM/PCM (see page 11-6).
15. Check for Temporary DTCs or DTCs with the HDS.

    Are any Temporary DTCs or DTCs indicated?

    YES—If DTC P0406 is indicated, check for poor connections or loose terminals at the EGR valve and the ECM/PCM, then go to step 1. If any other Temporary DTCs or DTCs are indicated, go to the indicated DTC's troubleshooting.

    NO—If the ECM/PCM was updated, troubleshooting is complete. If the ECM/PCM was substituted, replace the original ECM/PCM (see page 11-171). ■

Protected by AR

DTC Troubleshooting (cont'd)

DTC P2413: EGR System Malfunction

1. Turn the ignition switch ON (II).
2. Clear the DTC with the HDS.
3. Start the engine. Hold the engine speed at 3,000 rpm with no load (in Park or neutral) until the radiator fan comes on, then let it idle.
4. Do the EGR TEST in the INSPECTION MENU with the HDS.

   Is the result OK?

   YES – Intermittent failure, system is OK at this time. Check for poor connections or loose terminals at the EGR valve and the ECM/PCM. ■

   NO – Go to step 5.
5. Turn the ignition switch OFF.
6. Turn the ignition switch ON (II).
7. Check the EGR VLS in the DATA LIST with the HDS.

   Is about 0 V indicated?

   YES – Go to step 8.

   NO – Go to step 19.
8. Turn the ignition switch OFF.
9. Disconnect the EGR valve 6P connector.
10. Turn the ignition switch ON (II).
11. Measure voltage between EGR valve 6P connector terminal No. 3 and body ground.

EGR VALVE 6P CONNECTOR

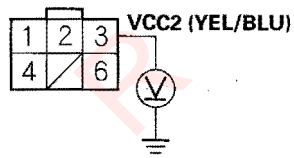

Wire side of female terminals

Is there about 5 V?

YES – Go to step 13.

NO – Go to step 12.

12. Measure voltage between ECM/PCM connector terminal D12 and body ground.

ECM/PCM CONNECTOR D (17P)

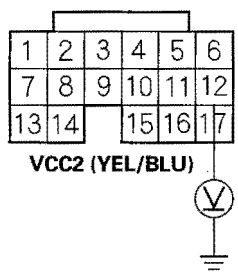

Wire side of female terminals

Is there about 5 V?

YES – Repair open in the wire between the EGR valve and the ECM/PCM (D12), then go to step 44.

NO – Go to step 50.

Protected by A P

13. Turn the ignition switch OFF.

14. Jump the SCS line with the HDS.

15. Disconnect ECM/PCM connector D (17P).

16. Check for continuity between ECM/PCM connector terminal D11 and body ground.

ECM/PCM CONNECTOR D (17P)

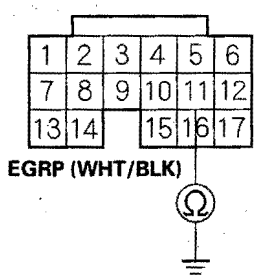

Wire side of female terminals

Is there continuity?

YES—Repair short in the wire between the ECM/PCM (D11) and the EGR valve, then go to step 44.

NO—Go to step 17.

17. Connect EGR valve 6P connector terminal No. 1 to body ground with a jumper wire.

EGR VALVE 6P CONNECTOR

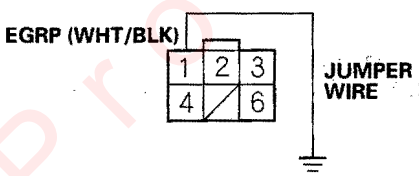

Wire side of female terminals

18. Check for continuity between ECM/PCM connector terminal D11 and body ground.

ECM/PCM CONNECTOR D (17P)

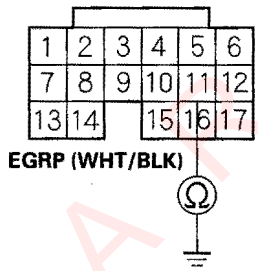

Wire side of female terminals

Is there continuity?

YES—Go to step 19.

NO—Repair open in the wire between the ECM/PCM (D11) and the EGR valve, then go to step 44.

19. Turn the ignition switch OFF.

20. Disconnect the EGR valve 6P connector (Skip this step if the connector is already disconnected).

21. At the sensor side, measure resistance between EGR valve 6P connector terminals No. 1 and No. 2.

EGR VALVE 6P CONNECTOR

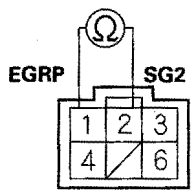

Terminal side of male terminals

Is there continuity or resistance of 100 kΩ or more?

YES—Go to step 43.

NO—Go to step 22.

(cont'd)

Protected by AK

DTC Troubleshooting (cont'd)

22. Measure resistance between EGR valve 6P connector terminals No. 1 and No. 3.

EGR VALVE 6P CONNECTOR

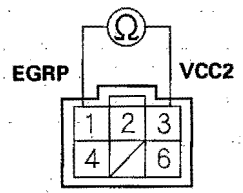

Terminal side of male terminals

Is there 100 kΩ or more?

YES – Go to step 43.

NO – Go to step 23.

23. Jump the SCS line with the HDS.

24. Disconnect ECM/PCM connector B (24P) (Skip this step if the connector is already disconnected).

25. Check for continuity between ECM/PCM connector terminal B5 and body ground.

ECM/PCM CONNECTOR B (24P)

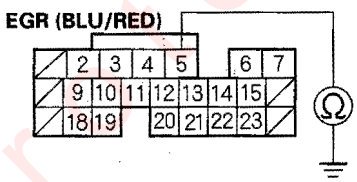

Wire side of female terminals

Is there continuity?

YES – Repair short in the wire between the ECM/PCM (B5) and the EGR valve, then go to step 44.

NO – Go to step 26.

26. Connect EGR valve 6P connector terminal No. 4 to body ground with a jumper wire.

EGR VALVE 6P CONNECTOR

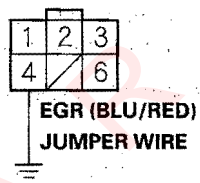

Wire side of female terminals

27. Check for continuity between ECM/PCM connector terminal B5 and body ground.

ECM/PCM CONNECTOR B (24P)

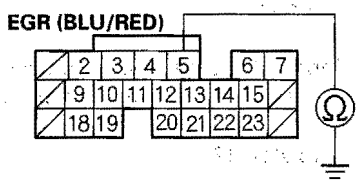

Wire side of female terminals

Is there continuity?

YES – Go to step 28.

NO – Repair open in the wire between the ECM/PCM (B5) and the EGR valve, then go to step 44.

Protected by AR

28. Remove the jumper wire from the EGR valve 6P connector.

29. Check for continuity between EGR valve 6P connector terminal No. 6 and body ground.

EGR VALVE 6P CONNECTOR

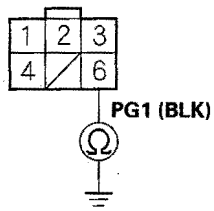

Wire side of female terminals

Is there continuity?

YES – Go to step 30.

NO – Repair open in the wire between the EGR valve and G101, then go to step 44.

30. Reconnect ECM/PCM connector B (24P).

31. Connect the battery positive terminal to EGR valve 6P connector terminal No. 4 with a jumper wire.

EGR VALVE 6P CONNECTOR

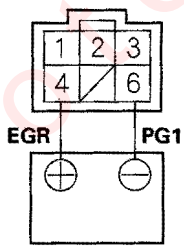

Terminal side of male terminals

32. Start the engine and let it idle, then connect the battery negative terminal to EGR valve 6P connector terminal No. 6 with a jumper wire.

Does the engine stall or run rough?

YES – Go to step 50.

NO – Go to step 33.

33. Turn the ignition switch OFF.

34. Remove the EGR valve (see page 11-295).

35. Clean the intake manifold EGR port with carburetor cleaner. Also, clean the passage inside the EGR valve with carburetor cleaner.

36. Install the EGR valve (see page 11-295).

37. Reconnect the EGR valve 6P connector.

38. Turn the ignition switch ON (II).

39. Reset the ECM/PCM with the HDS.

40. Do the ECM/PCM idle learn procedure (see page 11-239).

41. Do the EGR TEST in the INSPECTION MENU with the HDS.

Is the result OK?

YES – Go to step 48.

NO – Go to step 42.

(cont'd)

Protected by AR

DTC Troubleshooting (cont'd)

42. Turn the ignition switch OFF.
43. Replace the EGR valve (see page 11-295).
44. Turn the ignition switch ON (II).
45. Reset the ECM/PCM with the HDS.
46. Do the ECM/PCM idle learn procedure (see page 11-239).
47. Do the EGR TEST in the INSPECTION MENU with the HDS.
48. Check for Temporary DTCs or DTCs with the HDS.

    Are any Temporary DTCs or DTCs indicated?

    YES – If DTC P2413 is indicated, check for poor connections or loose terminals at the EGR valve and the ECM/PCM, then go to step 1. If any other Temporary DTCs or DTCs are indicated, go to the indicated DTC's troubleshooting.

    NO – Go to step 49.

49. Monitor the OBD STATUS for DTC P2413 in the DTCs MENU with the HDS.

    Does the screen indicate PASSED?

    YES – Troubleshooting is complete. ■

    NO – If the screen indicates FAILED, go to step 1 and recheck. If the screen indicates EXECUTING, keep driving until a result comes on. If the screen indicates OUT OF CONDITION, go to step 47 and recheck.

50. Update the ECM/PCM if it does not have the latest software, or substitute a known-good ECM/PCM (see page 11-6).
51. Do the EGR TEST in the INSPECTION MENU with the HDS.
52. Check for Temporary DTCs or DTCs with the HDS.

    Are any Temporary DTCs or DTCs indicated?

    YES – If DTC P2413 is indicated, check for poor connections or loose terminals at the EGR valve and the ECM/PCM, then go to step 1. If any other Temporary DTCs or DTCs are indicated, go to the indicated DTC's troubleshooting.

    NO – If the ECM/PCM was updated, troubleshooting is complete. If the ECM/PCM was substituted, replace the original ECM/PCM (see page 11-171). ■

Protected by

EGR Valve Replacement

1. Remove the intake manifold cover (see step 1 on page 9-3).
2. Disconnect the EGR valve 6P connector (A).

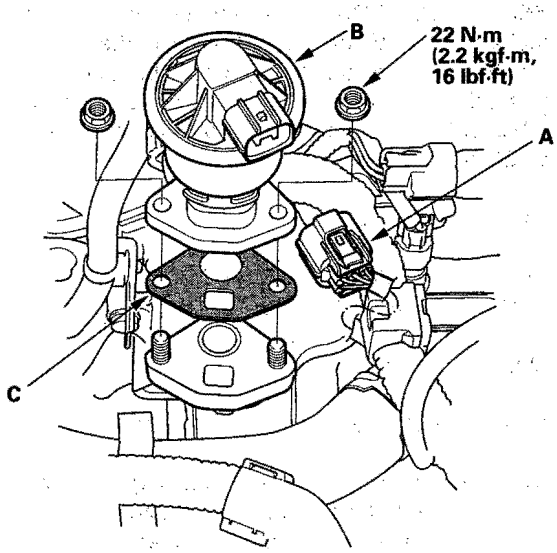

3. Remove the EGR valve (B).
4. Install the valve in the reverse order of removal with a new gasket (C).
5. Install the intake manifold cover (see step 8 on page 9-5).

Protected by AR

DTC Troubleshooting

DTC P2279: Intake Air System Leak

NOTE: If DTC P0443 is stored at the same time as DTC P2279, troubleshoot DTC P0443 first, then recheck for DTC P2279.

1. Check for vacuum leaks at these parts:

   - PCV valve
   - PCV hose
   - Purge (PCS) line
   - Throttle body
   - Intake manifold
   - Brake booster hose

   Are the parts OK?

   YES—Go to step 2.

   NO—Repair or replace the damaged parts, then go to step 4.

2. Start the engine. Hold the engine speed at 3,000 rpm with no load (in Park or neutral) until the radiator fan comes on, then let it idle for 1 minute.

3. Monitor the OBD STATUS for DTC P2279 in the DTCs MENU with the HDS.

   Does the screen indicate FAILED?

   YES—Check the camshaft timing (see step 21 on page 6-20), then go to step 4.

   NO—If the screen indicates PASSED, intermittent failure, system is OK at this time. If the screen indicates NOT COMPLETED, go to step 2 and recheck.

4. Reset the ECM/PCM with the HDS.

5. Do the ECM/PCM idle learn procedure (see page 11-239).

6. Start the engine. Hold the engine speed at 3,000 rpm with no load (in Park or neutral) until the radiator fan comes on, then let it idle for 1 minute.

7. Check for Temporary DTCs or DTCs with the HDS.

   Are any Temporary DTCs or DTCs indicated?

   YES—If DTC P2279 is indicated, check for vacuum leaks at the PCV valve, the PCV hose, the purge (PCS) line, the throttle body, or the brake booster hose, then go to step 1. If any other Temporary DTCs or DTCs are indicated, go to the indicated DTC's troubleshooting.

   NO—Go to step 8.

8. Monitor the OBD STATUS for DTC P2279 in the DTCs MENU with the HDS.

   Does the screen indicate PASSED?

   YES—Troubleshooting is complete. ■

   NO—If the screen indicates FAILED, go to step 1 and recheck. If the screen indicates NOT COMPLETED, go to step 6 and recheck.

Protected by ARS

PCV Valve Inspection and Test

1. Remove the intake manifold cover (see step 1 on page 9-3).

2. Check the PCV valve (A), hoses (B), and connections for leaks or restrictions.

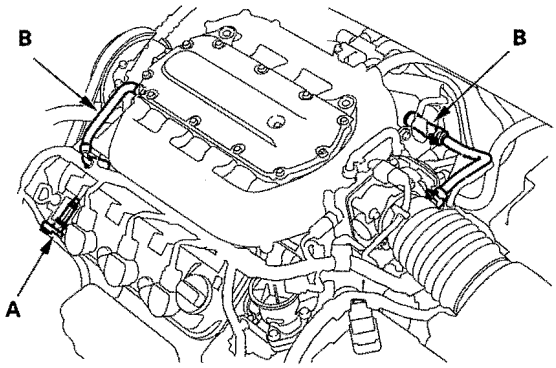

3. At idle, listen to the PCV valve (A) with a stethoscope as you lightly pinch the PCV hose (B) with your fingers or pliers several times. Each time the hose is pinched, the valve should click.

   If there is no clicking sound, check the PCV valve grommet for cracks or damage. If the grommet is OK, replace the PCV valve and recheck.

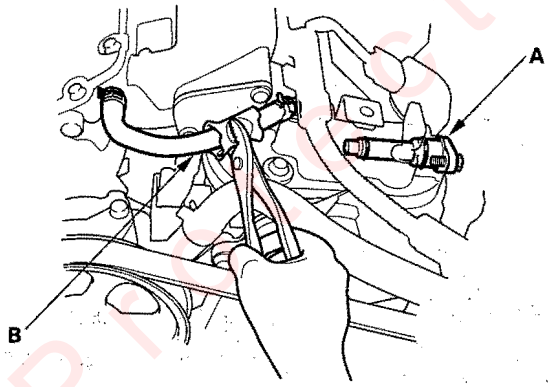

PCV Valve Replacement

1. Remove the intake manifold cover (see step 1 on page 9-3).

2. Remove the bolt (A).

   NOTE: Take care not to spill the oil on hot exhaust manifold.

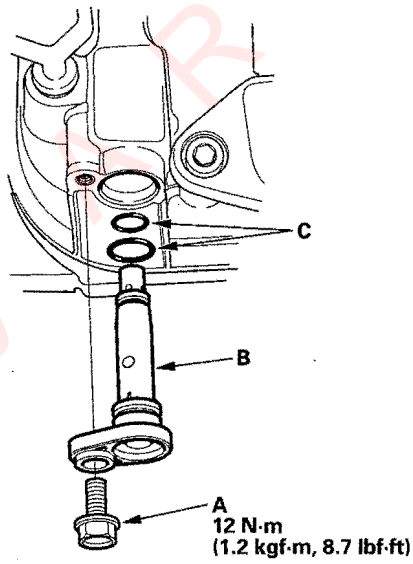

3. Remove the PCV valve (B).

4. Install the valve in the reverse order of removal.

   NOTE:
   - When installing a new PCV valve, make sure the O-rings (C) are in place.
   - When installing a used PCV valve, use new O-rings (C).

Protected by MR

Component Location Index

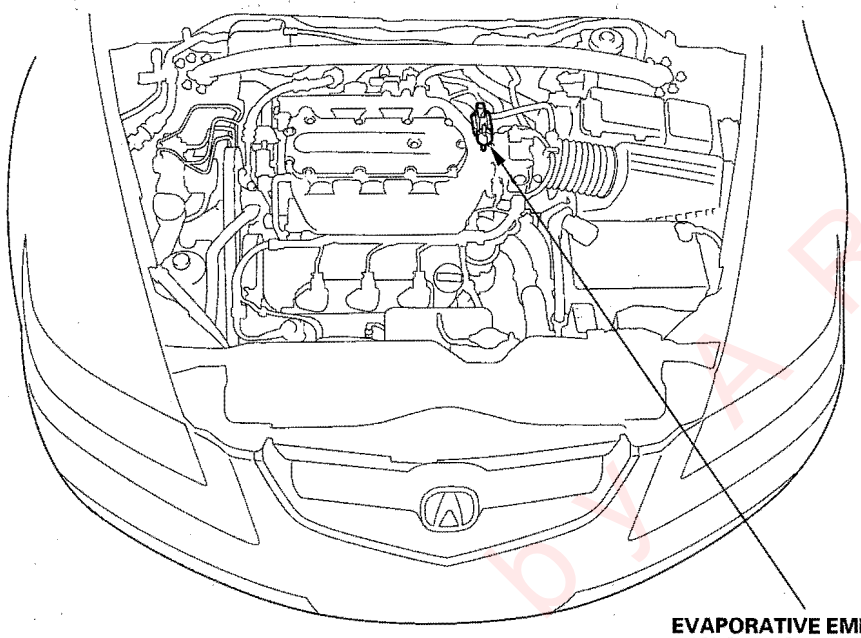

EVAPORATIVE EMISSION (EVAP) CANISTER PURGE VALVE
Replacement, page 11-325

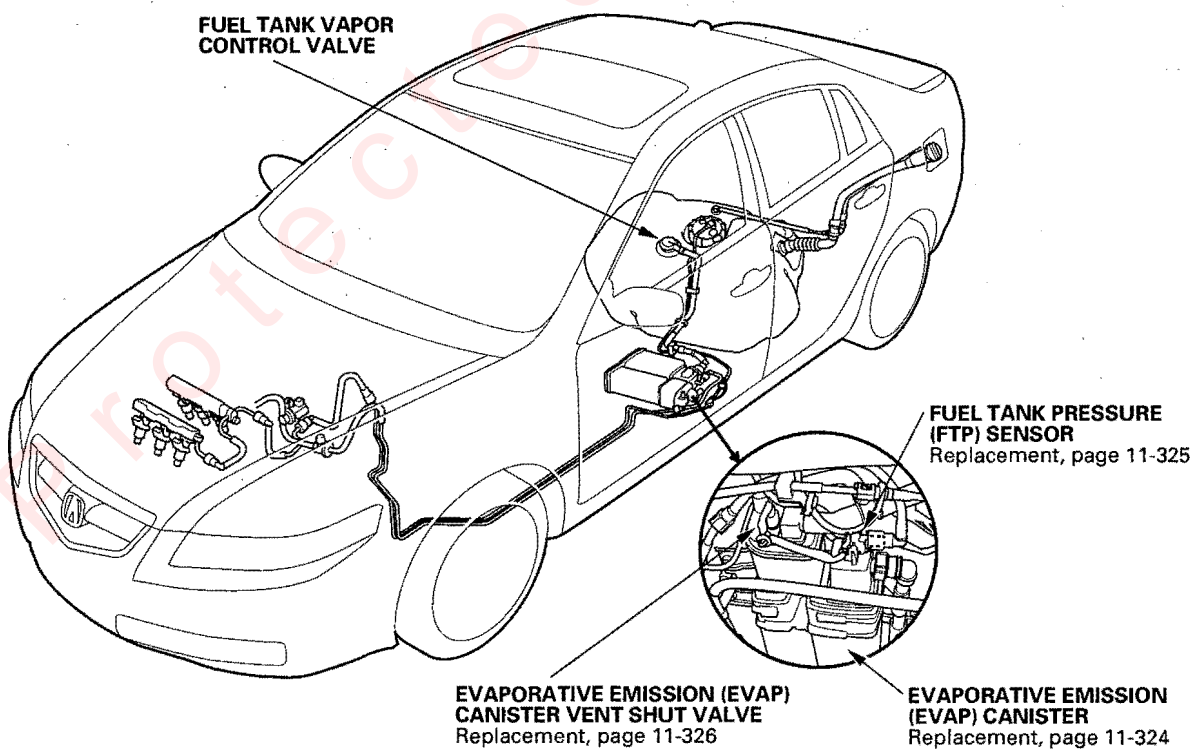

Protected by AR

DTC Troubleshooting

DTC P0442: EVAP System Small Leak Detected

DTC P0456: EVAP System Very Small Leak Detected

NOTICE

The fuel system is designed to allow specified maximum vacuum and pressure conditions. Do not deviate from the vacuum and pressure tests as indicated in these procedures. Excessive pressure/vacuum would damage the EVAP components or cause eventual fuel tank failure.

Special Tools Required

Vacuum pump/gauge, 0—30 in.Hg A973X-041-XXXXX

NOTE: Fresh fuel has a higher volatility that will create greater pressure/vacuum. The optimum condition for testing is less than a full tank of fresh fuel, If possible, to assist in leak detection, add 1 gallon of fresh fuel to the tank (as long as it will not fill the tank), just before starting these procedures.

1. Check the fuel fill cap (the cap must say "If not tightened 3 clicks check engine light may come on").

   Is the correct fuel fill cap installed and properly tightened?

   YES—Go to step 2.

   NO—Replace or tighten the cap, then go to step 22.

2. Check the fuel fill cap seal (A) and the fuel fill pipe mating surface (B). Verify that the fuel fill cap tether cord (C) is not caught under the cap.

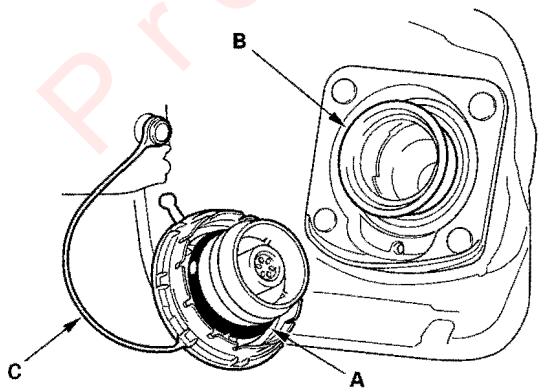

   Is the fuel fill cap seal missing or damaged, is the fuel fill pipe damaged, or is the tether cord caught under the cap?

   YES—Replace the fuel fill cap or the fuel fill pipe, then go to step 22.

   NO—Go to step 3.

3. Turn the ignition switch ON (II).

4. Clear the DTC with the HDS.

5. Do the EVAP FUNCTION TEST in the INSPECTION MENU with the HDS.

   Is the result OK?

   YES—Intermittent failure, system is OK at this time. Check for poor connections or loose terminals at the FTP sensor, the EVAP canister purge valve, or the EVAP canister vent shut valve and the ECM/PCM. ■

   NO—Go to step 6.

6. Turn the ignition switch OFF.

7. Turn the ignition switch ON (II).

8. Check for a poor connection or damage at the fuel tank vapor recirculation tube.

   Is the tube OK?

   YES—Go to step 9.

   NO—
   - Replace the fuel tank vapor recirculation tube, then go to step 22.
   - If necessary, replace the fuel tank (see page 11-258), then go to step 22.

(cont'd)

Protected by AR

DTC Troubleshooting (cont'd)

9. Disconnect the fuel tank vapor recirculation tube (A) from the EVAP canister (B), and plug the EVAP canister port (C).

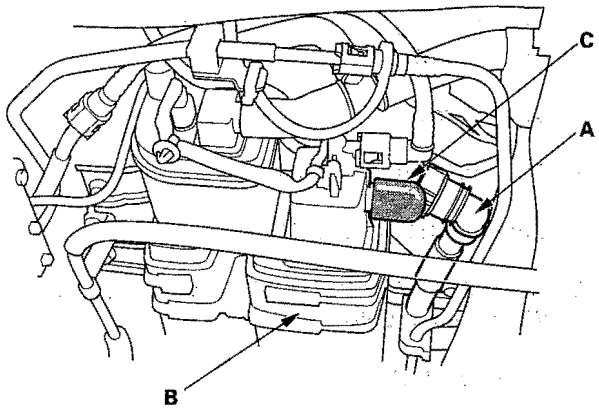

10. Disconnect the vacuum hose (purge line) from the EVAP canister purge valve (A) in the engine compartment, and connect a vacuum pump to the hose.

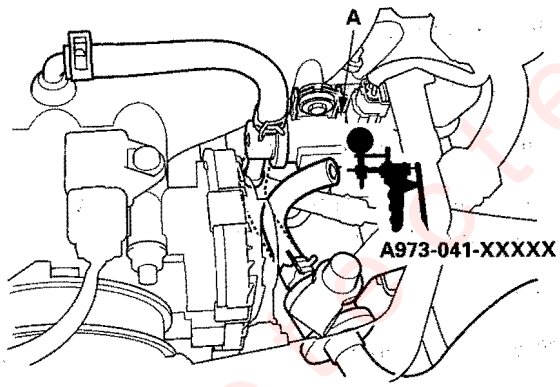

11. Do the EVAP CVS ON in the INSPECTION MENU with the HDS.

12. Apply vacuum to the hose until the FTP reads 1.90 V (0.59 in.Hg, −15.1 mmHg).

13. Monitor the FTP SENSOR in the DATA LIST for 1 minute with the HDS.

    Does the voltage drop to less than 0.2 V (0.1 in.Hg, 2.5 mmHg)?

    YES—Go to step 19.

    NO—Go to step 14.

14. Do the EVAP CVS OFF in the INSPECTION MENU with the HDS.

15. Disconnect the fresh air hose (A) from the EVAP canister vent shut valve (B), and plug the EVAP canister vent shut valve port (C).

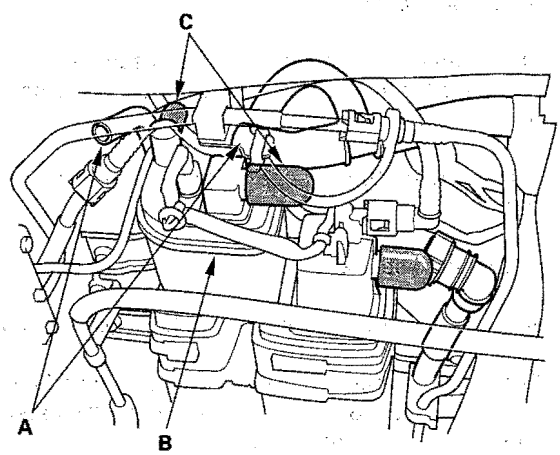

Provided by A R

16. Apply vacuum to the hose (disconnected in step 10) until the FTP reads 1.90 V (−0.59 in.Hg, −15.1 mmHg).

17. Monitor the FTP SENSOR in the DATA LIST for 1 minute with the the HDS.

    Does the voltage drop to less than 0.2 V (0.1 in.Hg, 2.5 mmHg)?

    YES—Replace the EVAP canister vent shut valve, then go to step 21.

    NO—Go to step 18.

18. Check for a loose or damaged PCS line between the EVAP canister and the EVAP canister purge valve.

    Is the line OK?

    YES—Replace the following parts, then go to step 21.

    - FTP sensor O-ring
    - EVAP canister vent shut valve case and O-ring
    - EVAP canister

    NO—Reconnect or repair the PCS hose, then go to step 21.

19. Do the EVAP CVS OFF in the INSPECTION MENU with the HDS.

20. Check these parts for looseness or damage.

    - Fuel fill pipe
    - Fuel vapor return pipe

    Are the parts OK?

    YES—Check the fuel tank unit base gasket (see page 11-257), and check the fuel tank, then go to step 21.

    NO—Repair or replace the damaged parts, then go to step 21.

21. Reconnect all hoses.

22. Turn the ignition switch ON (II).

23. Reset the ECM/PCM with the HDS.

24. Do the ECM/PCM idle learn procedure (see page 11-239).

25. Do the EVAP FUNCTION TEST in the INSPECTION MENU with the HDS.

    Is the result OK?

    YES—Troubleshooting is complete.■

    NO—Check for poor connections or loose terminals at the FTP sensor, the EVAP canister purge valve, or the EVAP canister vent shut valve and the ECM/PCM, then go to step 1.

Protected by A R

DTC Troubleshooting (cont'd)

DTC P0443: EVAP Canister Purge Valve Circuit Malfunction

Special Tools Required
Vacuum pump/gauge, 0—30 in.Hg A973X-041-XXXXX

1. Turn the ignition switch ON (II).
2. Clear the DTC with the HDS.
3. Start the engine. Hold the engine speed at 3,000 rpm with no load (in Park or neutral) until the radiator fan comes on, then let it idle.
4. Check for Temporary DTCs or DTCs with the HDS.

   Is DTC P0443 indicated?

   YES—Go to step 5.

   NO—Intermittent failure, system is OK at this time. Check for poor connections or loose terminals at the EVAP canister purge valve and the ECM/PCM. ■
5. Turn the ignition switch OFF, and allow the engine to cool below 149°F (65°C).
6. Disconnect the vacuum hose (A) from the EVAP purge valve service port (B) in the engine compartment, and connect a vacuum pump/gauge to the hose.

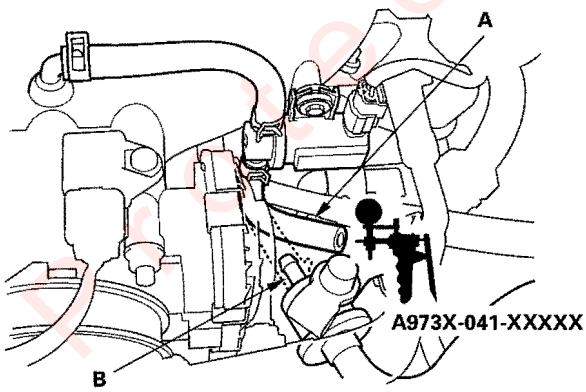

7. Start the engine, and let it idle.

   Is there vacuum?

   YES—Go to step 8.

   NO—Go to step 14.
8. Turn the ignition switch OFF.
9. Disconnect the EVAP canister purge valve 2P connector.
10. Check for continuity between EVAP canister purge valve 2P connector No. 1 and body ground.

EVAP CANISTER PURGE VALVE 2P CONNECTOR

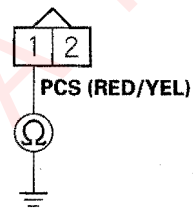

Wire side of female terminals

Is there continuity?

YES—Go to step 11.

NO—Go to step 24.

Protected by APR

11. Jump the SCS line with the HDS.
12. Disconnect ECM/PCM connector B (24P).
13. Check for continuity between EVAP canister purge valve 2P connector terminal No. 1 and body ground.

EVAP CANISTER PURGE VALVE 2P CONNECTOR

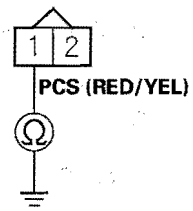

Wire side of female terminals

Is there continuity?

YES—Repair short in the wire between the EVAP canister purge valve and the ECM/PCM (B2), then go to step 25.

NO—Go to step 31.

14. Turn the ignition switch OFF.
15. Disconnect the EVAP canister purge valve 2P connector.
16. Turn the ignition switch ON (II).
17. Measure voltage between EVAP canister purge valve 2P connector terminal No. 2 and body ground.

EVAP CANISTER PURGE VALVE 2P CONNECTOR

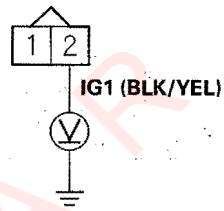

Wire side of female terminals

Is there battery voltage?

YES—Go to step 18.

NO—Repair open in the wire between the EVAP canister purge valve and the No. 18 IG ACG (15A) fuse in the under-dash fuse/relay box, then go to step 26.

18. Turn the ignition switch OFF.
19. Jump the SCS line with the HDS.
20. Disconnect ECM/PCM connector B (24P).
21. Connect EVAP canister purge valve 2P connector terminal No. 1 to body ground with a jumper wire.

EVAP CANISTER PURGE VALVE 2P CONNECTOR

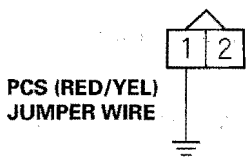

Wire side of female terminals

(cont'd)

Protected by AR

DTC Troubleshooting (cont'd)

22. Check for continuity between ECM/PCM connector terminal B2 and body ground.

ECM/PCM CONNECTOR B (24P)

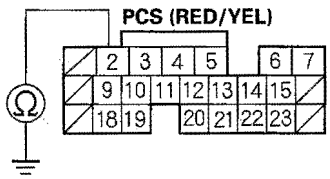

Wire side of female terminals

Is there continuity?

YES—Go to step 23.

NO—Repair open in the wire between the EVAP canister purge valve and the ECM/PCM (B2), then go to step 25.

23. Measure resistance between EVAP canister purge valve 2P connector terminals No. 1 and No. 2.

EVAP CANISTER PURGE VALVE 2P CONNECTOR

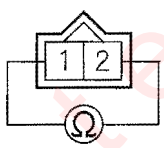

Terminal side of male terminals

Is there about 33 Ω at room temperature?

YES—Go to step 31.

NO—Go to step 24.

24. Replace the EVAP canister purge valve (see page 11-325).

25. Reconnect ECM/PCM connector B (24P).

26. Reconnect the EVAP canister purge valve 2P connector.

27. Turn the ignition switch ON (II).

28. Reset the ECM/PCM with the HDS.

29. Do the ECM/PCM idle learn procedure (see page 11-239).

30. Check for Temporary DTCs or DTCs with the HDS.

Are any Temporary DTCs or DTCs indicated?

YES—If DTC P0443 is indicated, check for poor connections or loose terminals at the EVAP canister purge valve and the ECM/PCM, then go to step 1. If any other Temporary DTCs or DTCs are indicated, go to the indicated DTC's troubleshooting.

NO—Troubleshooting is complete. ■

31. Update the ECM/PCM if it does not have the latest software, or substitute a known-good ECM/PCM (see page 11-6).

32. Check for Temporary DTCs or DTCs with the HDS.

Are any Temporary DTCs or DTCs indicated?

YES—If DTC P0443 is indicated, check for poor connections or loose terminals at the EVAP canister purge valve and the ECM/PCM, then go to step 1. If any other Temporary DTCs or DTCs are indicated, go to the indicated DTC's troubleshooting.

NO—If the ECM/PCM was updated, troubleshooting is complete. If the ECM/PCM was substituted, replace the original ECM/PCM (see page 11-171). ■

Protected by A R

DTC P0451: FTP Sensor Range/Performance Problem

NOTE: If DTC P2422 is stored at the same time as DTC P0451, troubleshoot DTC P2422 first, then recheck for DTC P0451.

1. Turn the ignition switch ON (II).
2. Clear the DTC with the HDS.
3. Start the engine, and let it idle for 1 minute.
4. Monitor the OBD STATUS for DTC P0451 in the DTCs MENU with the HDS.

   Does the screen indicate FAILED?

   YES—Go to step 5.

   NO—If the screen indicates PASSED, intermittent failure, system is OK at this time. If the screen indicates NOT COMPLETED, go to step 3 and recheck.
5. Turn the ignition switch OFF.
6. Replace the FTP sensor (see page 11-325).
7. Turn the ignition switch ON (II).
8. Reset the ECM/PCM with the HDS.
9. Do the ECM/PCM idle learn procedure (see page 11-239).
10. Start the engine, and let it idle for 1 minute.
11. Check for Temporary DTCs or DTCs with the HDS.

    Are any Temporary DTCs or DTCs indicated?

    YES—If DTC P0451 is indicated, check for poor connections or loose terminals at the FTP sensor and the ECM/PCM, then go to step 1. If any other Temporary DTCs or DTCs are indicated, go to the indicated DTC's troubleshooting.

    NO—Go to step 12.
12. Monitor the OBD STATUS for DTC P0451 in the DTCs MENU with the HDS.

    Does the screen indicate PASSED?

    YES—Troubleshooting is complete.■

    NO—If the screen indicates FAILED, check for poor connections or loose terminals at the FTP sensor and the ECM/PCM, then go to step 1. If the screen indicates NOT COMPLETED, go to step 10 and recheck.

Protected by A

DTC Troubleshooting (cont'd)

DTC P0452: FTP Sensor Circuit Low Voltage

1. Turn the ignition switch ON (II).
2. Clear the DTC with the HDS.
3. Turn the ignition switch OFF.
4. Remove the fuel fill cap.
5. Turn the ignition switch ON (II).
6. Check the FTP SENSOR in the DATA LIST with the HDS.

   Is about −7.3 kPa (−2.16 in.Hg, −55 mmHg), or 0.3 V, or less indicated?

   YES—Go to step 10.

   NO—Go to step 7.
7. Install the fuel fill cap.
8. Start the engine.
9. Monitor the OBD STATUS for DTC P0452 in the DTCs MENU with the HDS.

   Does the screen indicate FAILED?

   YES—Go to step 10.

   NO—If the screen indicates PASSED, intermittent failure, system is OK at this time. If the screen indicates NOT COMPLETED, go to step 5 and recheck.
10. Turn the ignition switch OFF.
11. Disconnect the FTP sensor 3P connector.
12. Turn the ignition switch ON (II).
13. Check the FTP SENSOR in the DATA LIST with the HDS.

    Is about 7.3 kPa (2.15 in.Hg, 54.7 mmHg), or 4.90 V indicated?

    YES—Go to step 20.

    NO—Go to step 14.
14. Measure voltage between FTP sensor 3P connector terminal No. 1 and body ground.

FTP SENSOR 3P CONNECTOR

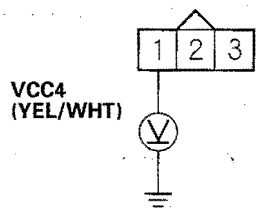

Wire side of female terminals

Is there about 5 V?

YES—Go to step 16.

NO—Go to step 15.

Protected by AR

15. Measure voltage between ECM/PCM connector terminal A12 and body ground.

ECM/PCM CONECTOR A (31P)

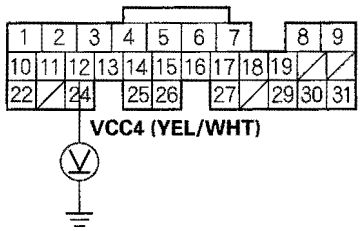

Wire side of female terminals

Is there about 5 V?

YES—Repair open in the wire between the ECM/PCM (A12) and the FTP sensor, then go to step 23.

NO—Go to step 29.

16. Turn the ignition switch OFF.
17. Jump the SCS line with the HDS.
18. Disconnect ECM/PCM connector A (31P).
19. Check for continuity between FTP sensor 3P connector terminal No. 2 and body ground.

FTP SENSOR 3P CONNECTOR

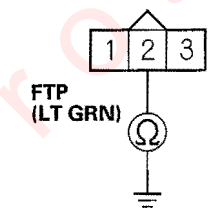

Wire side of female terminals

Is there continuity?

YES—Repair short in the wire between the ECM/PCM (A29) and the FTP sensor, then go to step 22.

NO—Go to step 29.

20. Turn the ignition switch OFF.
21. Replace the FTP sensor (see page 11-325).
22. Reconnect the ECM/PCM connectors.
23. Reconnect the FTP sensor 3P connector.
24. Turn the ignition switch ON (II).
25. Reset the ECM/PCM with the HDS.
26. Do the ECM/PCM idle learn procedure (see page 11-239).
27. Check for Temporary DTCs or DTCs with the HDS.

Are any Temporary DTCs or DTCs indicated?

YES—If DTC P0452 is indicated, check for poor connections or loose terminals at the FTP sensor and the ECM/PCM, then go to step 1. If any other Temporary DTCs or DTCs are indicated, go to the indicated DTC's troubleshooting.

NO—Go to step 28.

28. Monitor the OBD STATUS for DTC P0452 in the DTCs MENU with the HDS.

Does the screen indicate PASSED?

YES—Troubleshooting is complete. ■

NO—If the screen indicates FAILED, check for poor connections or loose terminals at the FTP sensor and the ECM/PCM, then go to step 1. If the screen indicates NOT COMPLETED, go to step 26 and recheck.

(cont'd)

Protected by A R

DTC Troubleshooting (cont'd)

29. Update the ECM/PCM if it does not have the latest software, or substitute a known-good ECM/PCM (see page 11-6).

30. Check for Temporary DTCs or DTCs with the HDS.

    Are any Temporary DTCs or DTCs indicated?

    YES—If DTC P0452 is indicated, check for poor connections or loose terminals at the FTP sensor and the ECM/PCM, then go to step 1. If any other Temporary DTCs or DTCs are indicated, go to the indicated DTC's troubleshooting.

    NO—If the ECM/PCM was updated, troubleshooting is complete. If the ECM/PCM was substituted, replace the original ECM/PCM (see page 11-171).■

Protected by AR

DTC P0453: FTP Sensor Circuit High Voltage

1. Turn the ignition switch ON (II).
2. Clear the DTC with the HDS.
3. Turn the ignition switch OFF.
4. Remove the fuel fill cap.
5. Turn the ignition switch ON (II).
6. Check the FTP SENSOR in the DATA LIST with the HDS.

   Is about 7.3 kPa (2.16 in.Hg, 55 mmHg), or 4.7 V, or more indicated?

   YES—Go to step 10.

   NO—Go to step 7.
7. Install the fuel fill cap.
8. Start the engine.
9. Monitor the OBD STATUS for DTC P0453 in the DTCs MENU with the HDS.

   Does the screen indicate FAILED?

   YES—Go to step 10.

   NO—If the screen indicates PASSED, intermittent failure, system is OK at this time. Check for poor connections or loose terminals at the FTP sensor and ECM/PCM. If the screen indicates NOT COMPLETED, go to step 6 and recheck.
10. Turn the ignition switch OFF.
11. Disconnect the FTP sensor 3P connector.
12. Turn the ignition switch ON (II).
13. Measure voltage between FTP sensor 3P connector terminal No. 2 and body ground.

FTP SENSOR 3P CONNECTOR

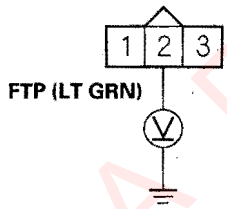

Wire side of female terminals

Is there about 5 V?

YES—Go to step 14.

NO—Go to step 15.

14. Measure voltage between FTP sensor 3P connector terminals No. 1 and No. 3.

FTP SENSOR 3P CONNECTOR

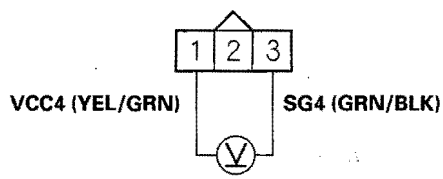

Wire side of female terminals

Is there about 5 V?

YES—Go to step 20.

NO—Repair open in the wire between the ECM/PCM (A1) and the FTP sensor, then go to step 23.

15. Turn the ignition switch OFF.
16. Jump the SCS line with the HDS.
17. Disconnect ECM/PCM connector A (31P).

(cont'd)

Protected by AR

DTC Troubleshooting (cont'd)

18. Connect FTP sensor connector terminal No. 2 to body ground with a jumper wire.

FTP SENSOR 3P CONNECTOR

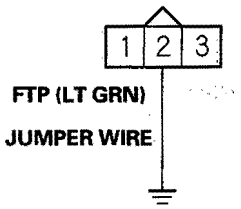

Wire side of female terminals

19. Check for continuity between ECM/PCM connector terminal A29 and body ground.

ECM/PCM CONECTOR A (31P)

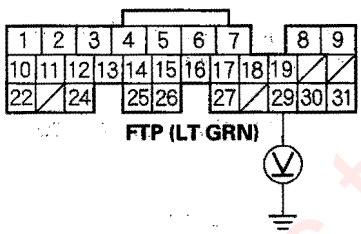

Wire side of female terminals

Is there continuity?

YES—Go to step 29.

NO—Repair open in the wire between the ECM/PCM (A29) and the FTP sensor, then go to step 22.

20. Turn the ignition switch OFF.
21. Replace the FTP sensor (see page 11-325).
22. Reconnect ECM/PCM connector A (31P).
23. Reconnect the FTP sensor 3P connector.
24. Turn the ignition switch ON (II).
25. Reset the ECM/PCM with the HDS.
26. Do the ECM/PCM idle learn procedure (see page 11-239).
27. Check for Temporary DTCs or DTCs with the HDS.

Are any Temporary DTCs or DTCs indicated?

YES—If DTC P0453 is indicated, check for poor connections or loose terminals at the FTP sensor and the ECM/PCM, then go to step 1. If any other Temporary DTCs or DTCs are indicated, go to the indicated DTC's troubleshooting.

NO—Go to step 28.

28. Monitor the OBD STATUS for DTC P0453 in the DTCs MENU with the HDS.

Does the screen indicate PASSED?

YES—Troubleshooting is complete.■

NO—If the screen indicates FAILED, check for poor connections or loose terminals at the FTP sensor and the ECM/PCM, then go to step 1. If the screen indicates NOT COMPLETED, go to step 26 and recheck.

29. Update the ECM/PCM if it does not have the latest software, or substitute a known-good ECM/PCM (see page 11-6).
30. Check for Temporary DTCs or DTCs with the HDS.

Are any Temporary DTCs or DTCs indicated?

YES—If DTC P0453 is indicated, check for poor connections or loose terminals at the FTP sensor and the ECM/PCM, then go to step 1. If any other Temporary DTCs or DTCs are indicated, go to the indicated DTC's troubleshooting.

NO—If the ECM/PCM was updated, troubleshooting is complete. If the ECM/PCM was substituted, replace the original ECM/PCM (see page 11-171).■

Protected by AR

DTC P0457: EVAP System Leak Detected Fuel Fill Cap Loose or Missing

1. Check the fuel fill cap (the cap must say "If not tightened 3 clicks check engine light may come on").

   Is the correct fuel fill cap installed and properly tightened?

   YES—Go to step 2.

   NO—Replace or tighten the cap, then go to step 19.

2. Check the fuel fill cap seal (A) and the fuel fill pipe mating surface (B). Verify that the fuel fill cap tether cord (C) is not caught under the cap.

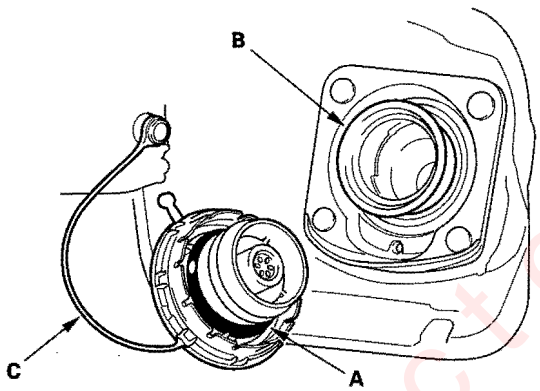

   Is the fuel fill cap seal missing or damaged, is the fuel fill pipe damaged, or is the tether cord caught under the cap?

   YES—Replace the fuel fill cap or the fuel fill pipe, then go to step 19.

   NO—Go to step 3.

3. Turn the ignition switch ON (II).

4. Clear the DTC with the HDS.

5. Do the EVAP FUNCTION TEST in the INSPECTION MENU with the HDS.

   Is the result OK?

   YES—Intermittent failure, system is OK at this time. Check for poor connections or loose terminals at the FTP sensor, or the EVAP canister vent shut valve and the ECM/PCM. ■

   NO—Go to step 6.

6. Turn the ignition switch OFF.

7. Remove the EVAP canister vent shut valve from the EVAP canister (see page 11-326).

8. Connect the 2P connector to the EVAP canister vent shut valve.

9. Turn the ignition switch ON (II).

10. Do the EVAP CVS ON in the INSPECTION MENU with the HDS.

11. Check the EVAP canister vent shut valve (A) operation.

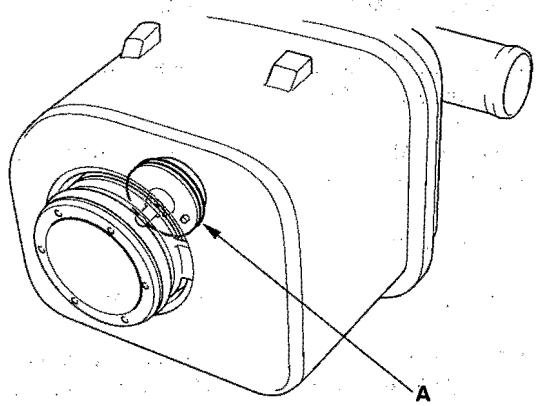

    Does the valve operate?

    YES—Check the routing of the EVAP canister vent tube, then go to step 18.

    NO—Go to step 12.

(cont'd)

Protected by AR

DTC Troubleshooting (cont'd)

12. Turn the ignition switch OFF.
13. Replace the EVAP canister vent shut valve (see page 11-326).
14. Turn the ignition switch ON (II).
15. Reset the ECM/PCM with the HDS.
16. Do the ECM/PCM idle learn procedure (see page 11-239).
17. Do the EVAP FUNCTION TEST in the INSPECTION MENU with the HDS.

    Is the result OK?

    YES—Troubleshooting is complete.■

    NO—Check for poor connections or loose terminals at the FTP sensor, or the EVAP canister vent shut valve and the ECM/PCM, then go to step 1.
18. Reinstall the EVAP canister vent shut valve.
19. Turn the ignition switch ON (II).
20. Reset the ECM/PCM with the HDS.
21. Do the ECM/PCM idle learn procedure (see page 11-239).
22. Do the EVAP FUNCTION TEST in the INSPECTION MENU with the HDS.

    Is the result OK?

    YES—Troubleshooting is complete.■

    NO—Check for poor connections or loose terminals at the FTP sensor, or the EVAP canister vent shut valve and the ECM/PCM, then go to step 1.

Protected by AR

DTC P0496: EVAP System High Purge Flow

1. Turn the ignition switch ON (II).
2. Clear the DTC with the HDS.
3. Do the EVAP FUNCTION TEST in the INSPECTION MENU with the HDS.

   Is the result OK?

   YES—Intermittent failure, system is OK at this time. Check for poor connections or loose terminals at the FTP sensor, the EVAP canister purge valve, or the EVAP canister vent shut valve and the ECM/PCM. ■

   NO—Go to step 4.
4. Turn the ignition switch OFF.
5. Replace the EVAP canister purge valve (see page 11-325).
6. Turn the ignition switch ON (II).
7. Reset the ECM/PCM with the HDS.
8. Do the ECM/PCM idle learn procedure (see page 11-239).
9. Do the EVAP FUNCTION TEST in the INSPECTION MENU with the HDS.

   Is the result OK?

   YES—Troubleshooting is complete. ■

   NO—Check for poor connections or loose terminals at the FTP sensor, the EVAP canister purge valve, or the EVAP canister vent shut valve and the ECM/PCM, then go to step 1.

Protected by AR

DTC Troubleshooting (cont'd)

DTC P0497: EVAP System Low Purge Flow

Special Tools Required
- Vacuum pump/gauge, 0—30 in.Hg A973X-041-XXXXX
- Vacuum/pressure gauge, 0—4 in.Hg 07JAZ-001000B

1. Check the fuel fill cap (the cap must say "If not tightened 3 clicks check engine light may come on").

   Is the correct fuel fill cap installed and properly tightened?

   YES—Go to step 2.

   NO—Replace or tighten the fuel fill cap, then go to step 23.

2. Turn the ignition switch ON (II).

3. Clear the DTC with the HDS.

4. Do the EVAP FUNCTION TEST in the INSPECTION MENU with the HDS.

   Is the result OK?

   YES—Intermittent failure, system is OK at this time. Check for poor connections or loose terminals at the FTP sensor, the EVAP canister purge valve, or the EVAP canister vent shut valve and the ECM/PCM.■

   NO—Go to step 5.

5. Check for a loose or damaged PCS line between the intake manifold and the EVAP canister purge valve.

   Is the line OK?

   YES—Go to step 6.

   NO—Reconnect or repair the PCS line, then go to step 23.

6. Disconnect the vacuum hose from the EVAP canister purge valve service port (A) in the engine compartment, and connect a vacuum pump towards the EVAP canister purge valve (B).

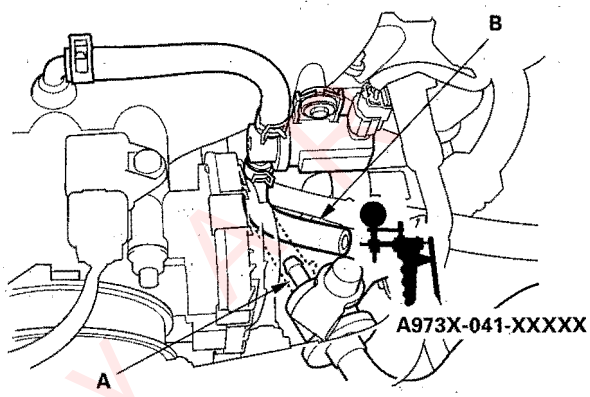

7. Do the EVAP PCS ON in the INSPECTION MENU with the HDS.

8. Slowly apply about 0.6 in.Hg (15 mmHg) of vacuum to the hose.

   Does it hold vacuum?

   YES—Replace the EVAP canister purge valve, then go to step 23.

   NO—Go to step 9.

9. Reconnect the vacuum hose to the EVAP service port.

10. Disconnect the vacuum hose from the PCS line (at the EVAP canister side), and connect a vacuum pump to the hose.

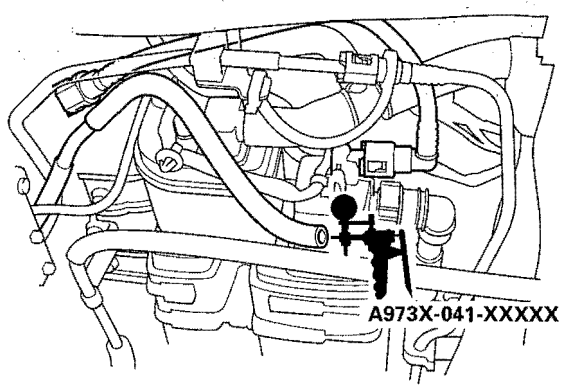

Protected by

11. Do the EVAP PCS ON in the INSPECTION MENU with the HDS.

12. Slowly apply about 2 kPa (0.6 in.Hg, 15 mmHg) of vacuum to the hose.

    Does it hold vacuum?

    YES—Check for a restrictied PCS line between the EVAP canister purge valve and the EVAP canister, then go to step 22.

    NO—Go to step 13.

13. Remove the FTP sensor with its connector connected (see page 11-325).

14. Connect a T-fitting (A) from the vacuum gauge and the vacuum pump to the FTP sensor (B) as shown.

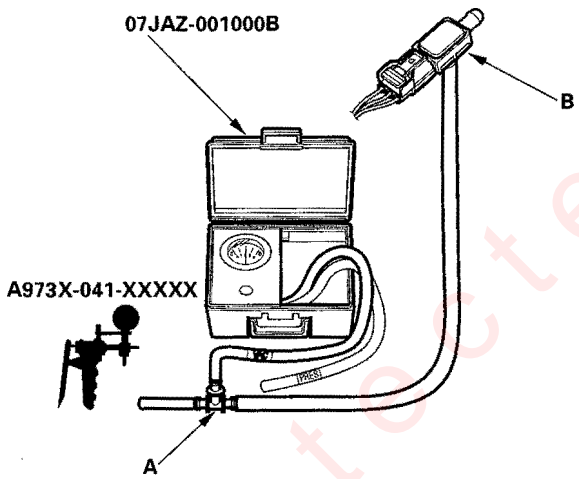

15. Slowly apply about 1.3 kPa (0.4 in.Hg, 10 mmHg) of vacuum to the hose.

16. Check the FTP SENSOR in the DATA LIST with the HDS.

    Is the difference more than 1.1 kPa (0.31 in.Hg, 8 mmHg) before and after applying vacuum?

    YES—Go to step 17.

    NO—Replace the FTP sensor (see page 11-325), then go to step 22.

17. Reconnect the vacuum hoses to the PCS line (EVAP canister side), and reinstall the FTP sensor.

18. Disconnect the vacuum hose (A) from the EVAP canister purge valve (B), and connect a vacuum pump to the hose.

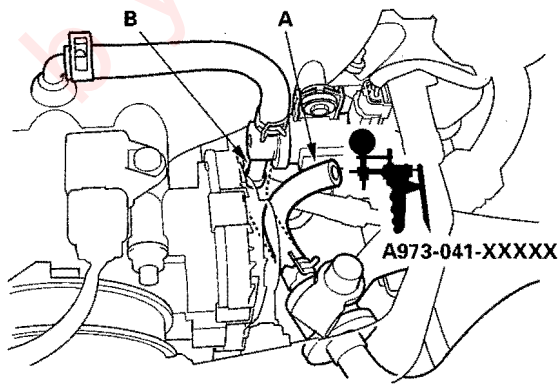

19. Do the EVAP CVS ON in the INSPECTION MENU with the HDS.

20. Slowly apply about 2 kPa (0.6 in.Hg, 15 mmHg) of vacuum to the hose.

    Does the hose hold vacuum?

    YES—Check for blockage on the EVAP canister port, then go to step 21.

    NO—Replace the EVAP canister vent shut valve (see page 11-326), then go to step 21.

(cont'd)

Protected by A.P.

DTC Troubleshooting (cont'd)

21. Install the FTP sensor (see page 11-325).
22. Reconnect all hoses.
23. Turn the ignition switch ON (II).
24. Reset the ECM/PCM with the HDS.
25. Do the ECM/PCM idle learn procedure (see page 11-239).
26. Do the EVAP FUNCTION TEST in the INSPECTION MENU with the HDS.

    Is the result OK?

    YES—Troubleshooting is complete.■

    NO—Check for poor connections or loose terminals at the FTP sensor, the EVAP canister purge valve, or the EVAP canister vent shut valve and the ECM/PCM, then go to step 1.

Protected by AR

DTC P0498: EVAP Canister Vent Shut Valve Control Circuit Low Voltage

1. Turn the ignition switch ON (II).
2. Clear the DTC with the HDS.
3. Check for Temporary DTCs or DTCs with the HDS.

   Is DTC P0498 indicated?

   YES—Go to step 6.

   NO—Go to step 4.
4. Do the EVAP CVS ON in the INSPECTION MENU with the HDS.
5. Check for Temporary DTCs or DTCs with the HDS.

   Is DTC P0498 indicated?

   YES—Go to step 6.

   NO—Intermittent failure, system is OK at this time. Check for poor connections or loose terminals at the EVAP canister vent shut valve and the ECM/PCM. ■
6. Turn the ignition switch OFF.
7. Disconnect the EVAP canister vent shut valve 2P connector.
8. Turn the ignition switch ON (II).
9. Measure voltage between EVAP canister vent shut valve 2P connector terminal No. 2 and body ground.

EVAP CANISTER VENT SHUT VALVE 2P CONNECTOR

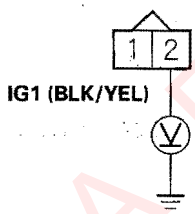

Wire side of female terminals

Is there battery voltage?

YES—Go to step 10.

NO—Repair open in the wire between the EVAP canister vent shut valve and the No. 18 IG ACG (15A) fuse in the under-dash fuse/relay box, then go to step 20.

10. Turn the ignition switch OFF.
11. Measure resistance between EVAP canister vent shut valve 2P connector terminals No. 1 and No. 2.

EVAP CANISTER VENT SHUT VALVE 2P CONNECTOR

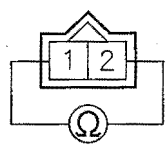

Terminal side of male terminals

Is there about 25—30 Ω at room temperature?

YES—Go to step 12.

NO—Go to step 18.

(cont'd)

Protected by AR

DTC Troubleshooting (cont'd)

12. Turn the ignition switch OFF.
13. Jump the SCS line with the HDS.
14. Disconnect ECM/PCM connector A (31P).
15. Check for continuity between ECM/PCM connector terminal A10 and body ground.

ECM/PCM CONECTOR A (31P)

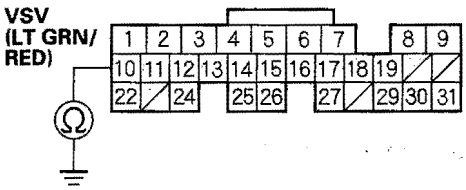

Wire side of female terminals

Is there continuity?

YES—Repair short in the wire between the EVAP canister vent shut valve and the ECM/PCM (A10), then go to step 19.

NO—Go to step 16.

16. Connect EVAP canister vent shut valve 2P connector terminal No. 1 to body ground with a jumper wire.

EVAP CANISTER VENT SHUT VALVE 2P CONNECTOR

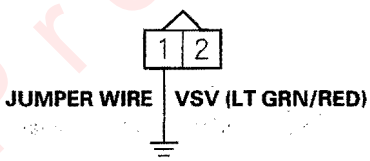

Wire side of female terminals

17. Check for continuity between ECM/PCM connector terminal A10 and body ground.

ECM/PCM CONECTOR A (31P)

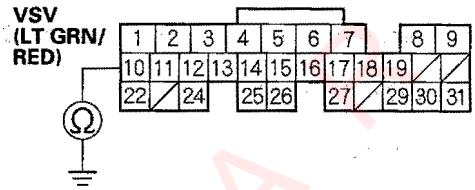

Wire side of female terminals

Is there continuity?

YES—Go to step 26.

NO—Repair open in the wire between the EVAP canister vent shut valve and the ECM/PCM (A10), then go to step 19.

18. Replace the EVAP canister vent shut valve (see page 11-326).
19. Reconnect ECM/PCM connector A (31P).

Protected by A

20. Reconnect the EVAP canister vent shut valve 2P connector.

21. Turn the ignition switch ON (II).

22. Reset the ECM/PCM with the HDS.

23. Do the ECM/PCM idle learn procedure (see page 11-239).

24. Do the EVAP CVS ON in the INSPECTION MENU with the HDS.

25. Check for Temporary DTCs or DTCs with the HDS.

    Are any Temporary DTCs or DTCs indicated?

    YES—If DTC P0498 is indicated, check for poor connections or loose terminals at the EVAP canister vent shut valve and the ECM/PCM, then go to step 1. If any other Temporary DTCs or DTCs are indicated, go to the indicated DTC's troubleshooting.

    NO—Troubleshooting is complete. ■

26. Update the ECM/PCM if it does not have the latest software, or substitute a known-good ECM/PCM (see page 11-6).

27. Do the EVAP CVS ON in the INSPECTION MENU with the HDS.

28. Check for Temporary DTCs or DTCs with the HDS.

    Are any Temporary DTCs or DTCs indicated?

    YES—If DTC P0498 is indicated, check for poor connections or loose terminals at the EVAP canister vent shut valve and the ECM/PCM, then go to step 1. If any other Temporary DTCs or DTCs are indicated, go to the indicated DTC's troubleshooting.

    NO—If the ECM/PCM was updated, troubleshooting is complete. If the ECM/PCM was substituted, replace the original ECM/PCM (see page 11-171). ■

Protected by AR

DTC Troubleshooting (cont'd)

DTC P0499: EVAP Canister Vent Shut Valve Control Circuit High Voltage

1. Turn the ignition switch ON (II).
2. Clear the DTC with the HDS.
3. Do the EVAP CVS ON in the INSPECTION MENU with the HDS.
4. Check for Temporary DTCs or DTCs with the HDS.

   Is DTC P0499 indicated?

   YES—Update the ECM/PCM if it does not have the latest software, or substitute a known-good ECM/PCM, then recheck (see page 11-6). If the symptom/indication goes away with a known-good ECM/PCM, replace the original ECM/PCM (see page 11-171).■

   NO—Intermittent failure, system is OK at this time. Check for poor connections or loose terminals at the EVAP canister vent shut valve and the ECM/PCM.■

Protected by AR

DTC P1454: FTP Sensor Range/Performance Problem

1. Turn the ignition switch ON (II).
2. Clear the DTC with the HDS.
3. Turn the ignition switch OFF.
4. Remove the fuel fill cap, and wait 1 minute.
5. Turn the ignition switch ON (II).
6. Check the FTP SENSOR in the DATA LIST with the HDS.

   Is it between −0.67 kPa and 0.67 kPa (−0.2−0.2 in.Hg, −5−5 mmHg), or 2.4−2.6 V?

   YES−Intermittent failure, system is OK at this time. Check for poor connections or loose terminals at the FTP sensor and the ECM/PCM. ■

   NO−Go to step 7.

7. Remove the FTP sensor (A) from the EVAP canister with its connector connected (see page 11-325).

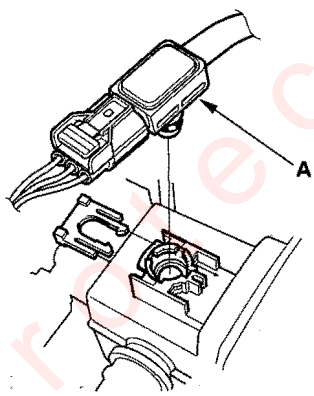

8. Check the FTP SENSOR in the DATA LIST with the HDS.

   Is it between −0.67 kPa and 0.67 kPa (−0.2−0.2 in.Hg, −5−5 mmHg), or 2.4−2.6 V?

   YES−Check for debris or clogging at the EVAP canister and the FTP sensor, then go to step 9.

   NO−Check for debris or restriction at the FTP sensor air tube. If the tube is OK, replace the FTP sensor (see page 11-325), then go to step 10.

9. Install the FTP sensor on the EVAP canister.
10. Turn the ignition switch ON (II).
11. Reset the ECM/PCM with the HDS.
12. Do the ECM/PCM idle learn procedure (see page 11-239).
13. Check for Temporary DTCs or DTCs with the HDS.

    Are any Temporary DTCs or DTCs indicated?

    YES−If DTC P1454 is indicated, check for poor connections or loose terminals at the FTP sensor and the ECM/PCM, then go to step 1. If any other Temporary DTCs or DTCs are indicated, go to the indicated DTC's troubleshooting.

    NO−Go to step 14.

14. Check the FTP SENSOR in the DATA LIST with the HDS.

    Is it between −0.67 kPa and 0.67 kPa (−0.2−0.2 in.Hg, −5−5 mmHg), or 2.4−2.6 V?

    YES−Troubleshooting is complete. ■

    NO−Check for poor connections or loose terminals at the FTP sensor and the ECM/PCM, then go to step 1.

Protected by AR

DTC Troubleshooting (cont'd)

DTC P2422: EVAP Canister Vent Shut Valve Stuck Closed Malfunction

1. Turn the ignition switch ON (II).
2. Clear the DTC with the HDS.
3. Remove the fuel fill cap for 5 seconds, then install it.
4. Start the engine. Hold the engine speed at 3,000 rpm with no load (in Park on neutral) until the radiator fan comes on, then let it idle.
5. Monitor the OBD STATUS for DTC P2422 in the DTCs MENU with the HDS.

   Does the screen indicate FAILED?

   YES – Go to step 6.

   NO – If the screen indicates PASSED, intermittent failure, system is OK at this time. Check for a poor connection or loose terminals at the EVAP canister vent shut valve and ECM/PCM. If the screen indicates NOT COMPLETED, go to step 3 and recheck.
6. Clear the DTC with the HDS.
7. Remove the EVAP canister vent shut valve from the EVAP canister (see page 11-326).
8. Connect the 2P connector to the EVAP canister vent shut valve.
9. Turn the ignition switch ON (II).
10. Do the EVAP CVS ON in the INSPECTION MENU with the HDS.
11. Check the EVAP canister vent shut valve (A) operation.

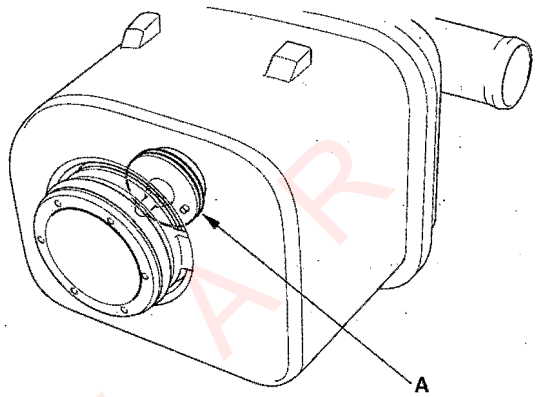

   Does the valve operate?

   YES – Check for a restriction in the EVAP canister, then install the EVAP canister vent shut valve, and go to step 14.

   NO – Go to step 12.
12. Turn the ignition switch OFF.
13. Replace the EVAP canister vent shut valve (see page 11-326).
14. Turn the ignition switch ON (II).
15. Reset the ECM/PCM with the HDS.
16. Do the ECM/PCM idle learn procedure (see page 11-239).
17. Turn the ignition switch OFF.
18. Remove the fuel fill cap for 5 seconds, then install it.
19. Start the engine. Hold the engine speed at 3,000 rpm with no load (in Park or neutral) until the radiator fan comes on, then let it idle.

Protected by AR

20. Check for Temporary DTCs or DTCs with the HDS.

    Are any Temporary DTCs or DTCs indicated?

    YES—If DTC P2422 is indicated, check for poor connections or loose terminals at the FTP sensor, or the EVAP canister vent shut valve and the ECM/PCM, then go to step 1. If any other Temporary DTCs or DTCs are indicated, go to the indicated DTC's troubleshooting.

    NO—Go to step 21.

21. Monitor the OBD STATUS for DTC P2422 in the DTCs MENU with the HDS.

    Does the screen indicate PASSED?

    YES—Troubleshooting is complete. ■

    NO—If the screen indicates FAILED, check for poor connections or loose terminals at the FTP sensor, or the EVAP canister vent shut valve and the ECM/PCM, then go to step 1. If the screen indicates NOT COMPLETED, go to step 18 and recheck.

Protected by AR

EVAP Canister Replacement

1. Remove the EVAP canister cover (A).

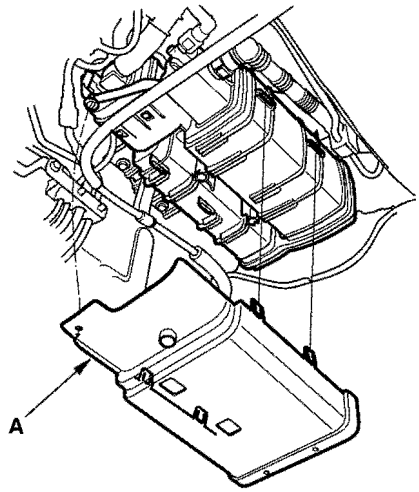

2. Remove the hoses (A), the FTP sensor 3P connector (B), and EVAP canister vent shut valve 2P connector (C).

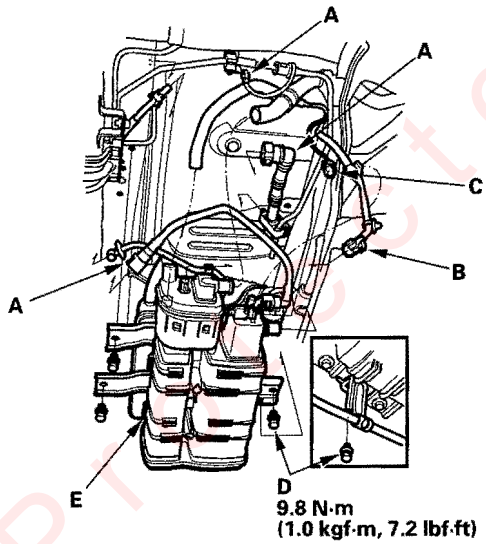

3. Remove the bolt (D).

4. Remove the EVAP canister assembly (E).

5. Remove the EVAP canister bracket (A).

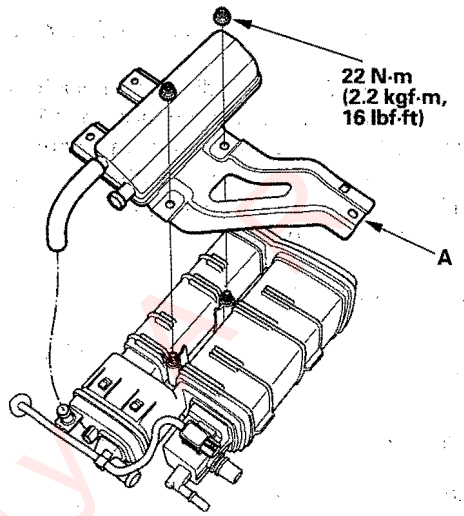

6. Install the canister in the reverse order of removal.

Protected by

FTP Sensor Replacement

1. Remove the EVAP canister (see page 11-324).
2. Remove the FTP sensor (A).

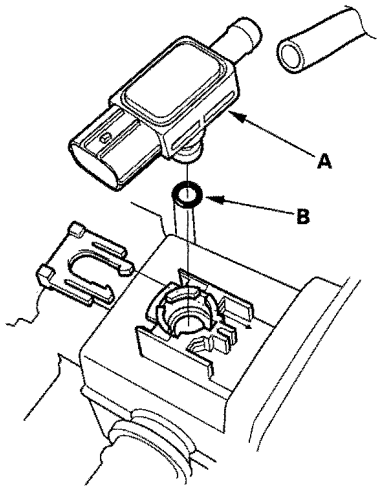

3. Install the sensor in the reverse order of removal with a new O-ring (B).

EVAP Canister Purge Valve Replacement

1. Disconnect the hoses (A) and the EVAP canister purge valve 2P connector (B).

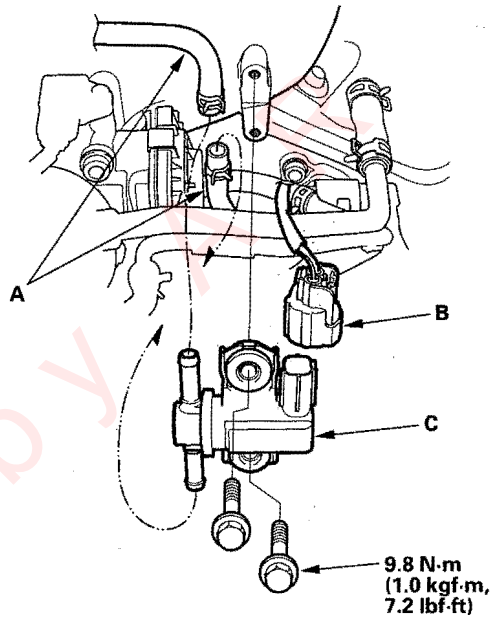

2. Remove the EVAP canister purge valve (C).
3. Install the valve in the reverse order of removal.

Protected by

EVAP Canister Vent Shut Valve Replacement

1. Remove the EVAP canister (see page 11-324).

2. Open the stopper (A) and then remove the EVAP canister vent shut valve (B).

   NOTE: Be careful not to damage the stoppers.

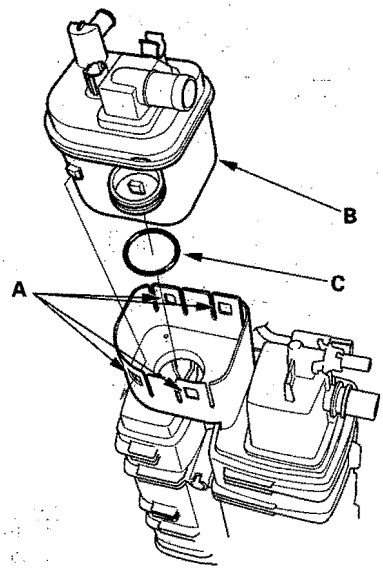

3. Install the valve in the reverse order of removal with a new O-ring (C).

   NOTE: Do not coat the O-ring with oil.

Protected by AR

Transaxle

Clutch 12-1

Manual Transmission 13-1

Automatic Transmission 14-1

Driveline/Axle 16-1

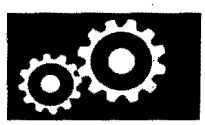

Protected by A R

Clutch

Special Tools 12-2
Component Location Index 12-3
System Description 12-4
Clutch Pedal, Clutch Pedal Position Switch, and Clutch Interlock Switch Adjustment 12-6
Clutch Pedal Replacement 12-7
Clutch Master Cylinder Replacement 12-8
Slave Cylinder Replacement 12-10
Clutch Replacement 12-12

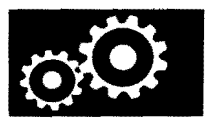

Protected by R

Special Tools

Ref. No.	Tool Number	Description	Qty
①	07AAE-P8EA000	Pressure Plate Compressor	1
②	07AAF-P8EA000	Clutch Alignment Shaft	1
③	07AAK-P8EA000	Pressure Plate Compressor Adapter	1
④	07LAB-PV00100 or 07924-PD20003	Ring Gear Holder	1
⑤	07746-0010200	Attachment, 37 x 40 mm	1
⑥	07749-0010000	Driver	1

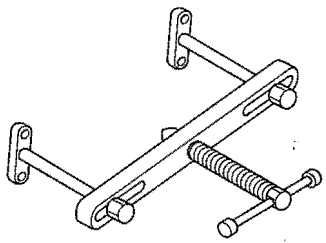
①

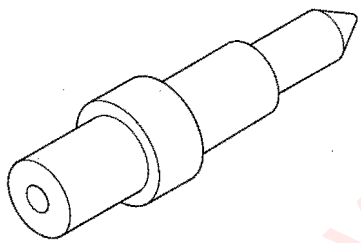
②

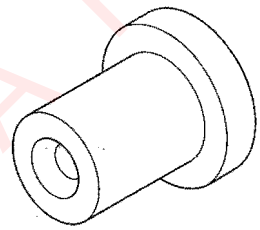
③

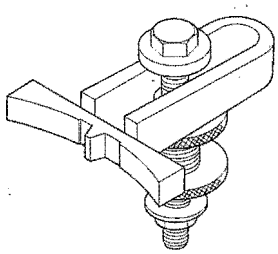
④

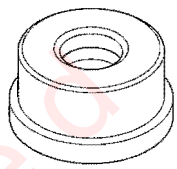
⑤

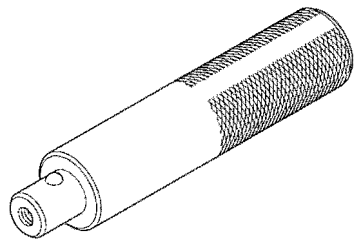
⑥

Protected by AR

Component Location Index

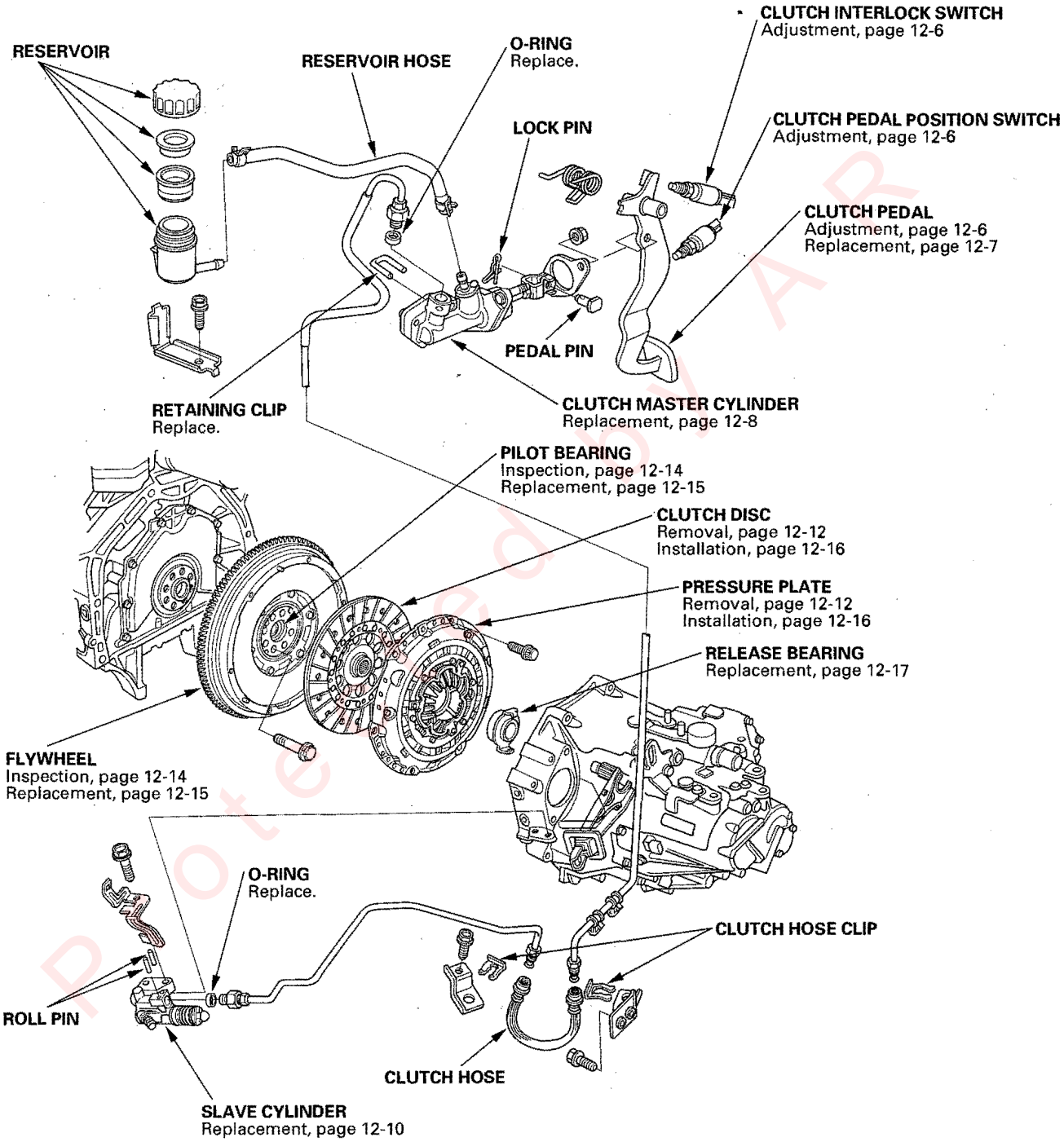

Protected by AR

System Description

Self-Adjusting Clutch (SAC)

Function

On ordinary clutches, the clutch pedal load increases as the clutch disc wears. The self-adjusting clutch is designed so that the clutch pedal load will not increase even when the clutch disc wears. This is done by automatically adjusting the fulcrum of the diaphragm spring in accordance with the wear of the clutch disc. The clutch pedal load stays consistent even when the clutch disc is worn.

Construction

The self-adjusting clutch consists of a pressure plate, a sensor spring, a diaphragm spring, an adjusting ring, three coil springs, a pressure plate cover, and a compensation spring. They are riveted together and must not be disassembled. If there is problem with any part of the pressure plate or clutch disc, they must be replaced as a set.

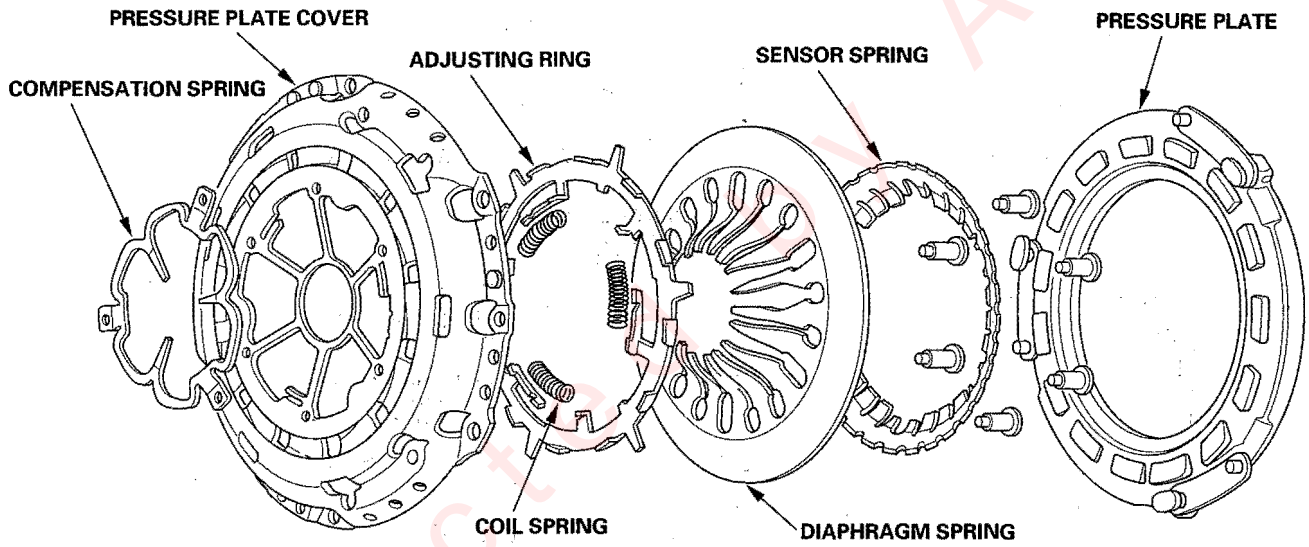

Operation

1. When the clutch disc wears slightly.
   As the clutch begins to wear, the release load increases slightly. However, this does not affect the operation of the clutch because the release load does not exceed that of the sensor.

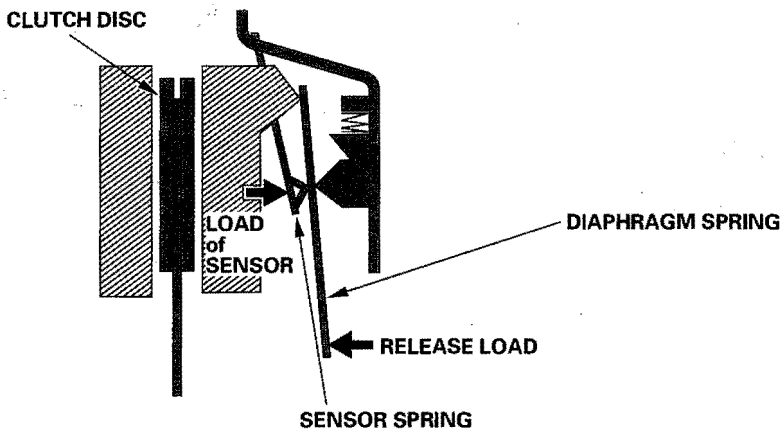

2. When the clutch disc wears considerably.
   The sensor spring starts to deflect as the clutch disc is worn further and the release load exceeds that of the sensor.

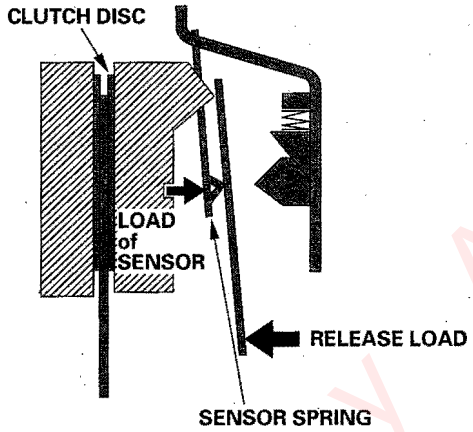

The fulcrum then moves following the amount of sensor spring deflection. As this takes place, the fulcrum of diaphragm spring is adjusted, keeping the release load consistent.

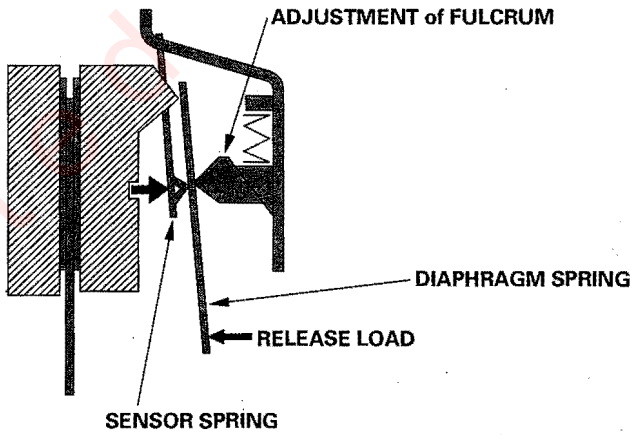

Protected by AR

Clutch Pedal, Clutch Pedal Position Switch, and Clutch Interlock Switch Adjustment

NOTE:
- Check the clutch pedal position switch (see page 4-44).
- Check the clutch interlock switch (see page 4-8).
- Remove the driver's floor mat before adjusting the clutch pedal.
- The clutch is self-adjusting to compensate for wear.
- If there is no clearance between the master cylinder piston and pushrod, the release bearing will be held against the diaphragm spring, which can result in clutch slippage or other clutch problems.

1. Loosen the clutch pedal position switch locknut (A), and back off the clutch pedal position switch (B) until it no longer touches the clutch pedal (C).

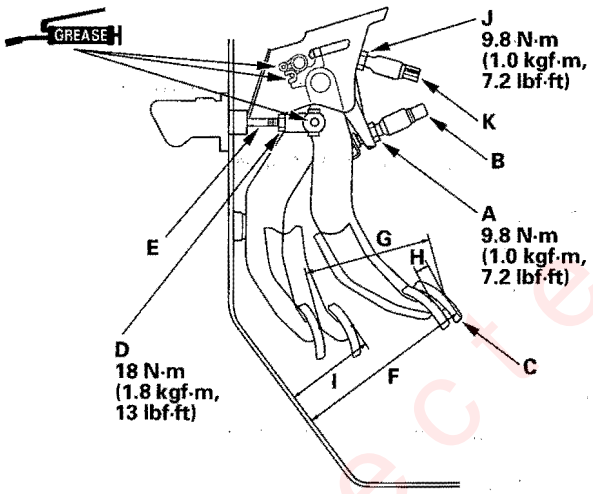

2. Loosen the clutch pushrod locknut (D), and turn the pushrod (E) in or out to get the specified height (F), stroke (G), free play (H) and disengagement height (I) at the clutch pedal.

Clutch Pedal Stroke:	**130—140 mm (5.12—5.51 in.)**
Clutch Pedal Free Play:	**10—18 mm (0.39—0.71 in.)**
Clutch Pedal Height:	**191 mm (7.52 in.)**
Clutch Pedal Disengagement Height:	**90.5 mm (3.56 in.)**

3. Tighten the clutch pushrod locknut (D).
4. With the clutch pedal released, turn in the clutch pedal position switch (B) until it contacts the clutch pedal (C).
5. Turn in the clutch pedal position switch (B) an additional 3/4 to 1 turn.
6. Tighten the clutch pedal position switch locknut (A).
7. Press the clutch pedal to the floor.
8. Release the clutch pedal 3—8 mm (0.39—0.63 in.) from the fully pressed position, and hold it there. Adjust the position of the clutch interlock switch (K) so the engine will start with the clutch pedal in this position.
9. Tighten the clutch interlock switch locknut (J).

Protected by AR

Clutch Pedal Replacement

1. Remove the driver's dashboard lower cover (see page 20-82).

2. Disconnect the clutch pedal position switch connector (A) and clutch interlock switch connector (B).

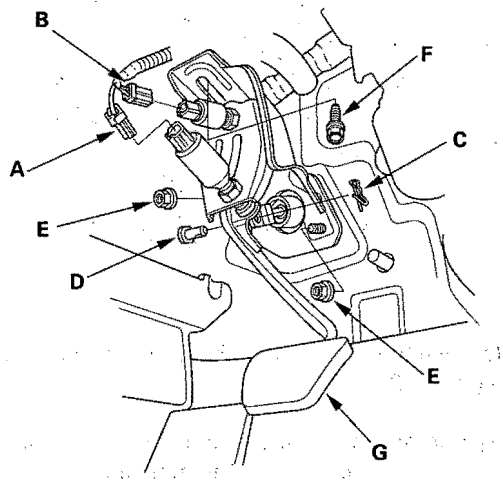

3. Pry out the lock pin (C), and pull the pedal pin (D) out of the yoke.

4. Remove the master cylinder mounting nuts (E) and clutch pedal mounting bolt (F).

5. Remove the clutch pedal (G).

6. Install the clutch pedal (A).

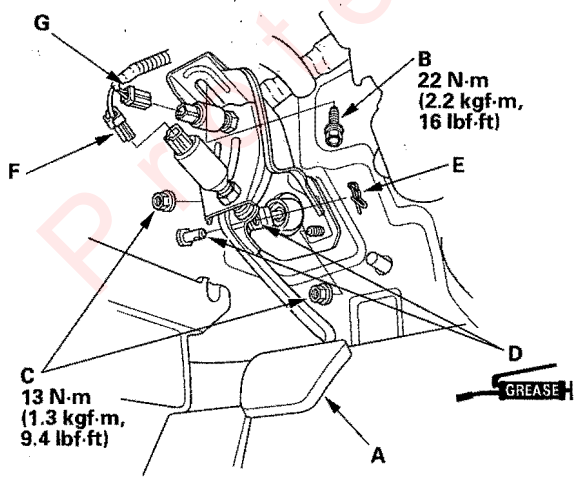

7. Install the clutch pedal mounting bolt (B) and master cylinder mounting nuts (C).

8. Apply grease to the pedal pin (D), and slide it into the yoke, then install a new lock pin (E).

9. Connect the clutch pedal position switch connector (F) and clutch interlock switch connector (G).

10. Adjust the clutch pedal, clutch pedal position switch, and clutch interlock switch (see page 12-6).

11. Reinstall the driver's dashboard lower cover (see page 20-82).

Protected by AR

Clutch Master Cylinder Replacement

NOTE: Do not spill brake fluid on the vehicle; it may damage the paint; if brake fluid does contact the paint, wash it off immediately with water.

1. Remove the left rear engine compartment cover (A) and the left side engine compartment cover (B).

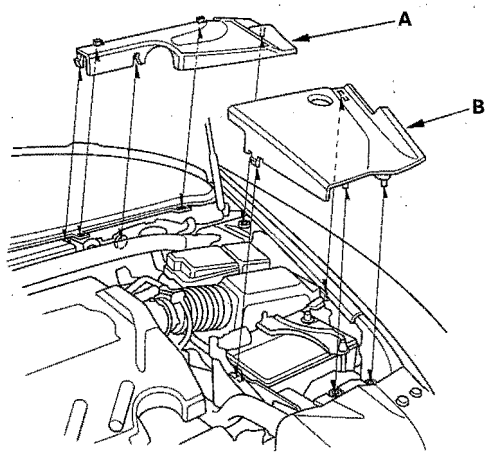

2. Remove the brake fluid from the clutch master cylinder reservoir with a syringe.

3. Make sure you have the anti-theft codes for the radio and the navigation system, then write down the customer's XM radio channel presets. Make sure the ignition switch is OFF.
Disconnect the negative (−) cable first, then the positive (+) cable from the battery.
Remove the battery.

4. Remove the air cleaner housing (see page 11-273).

5. Remove the battery base.

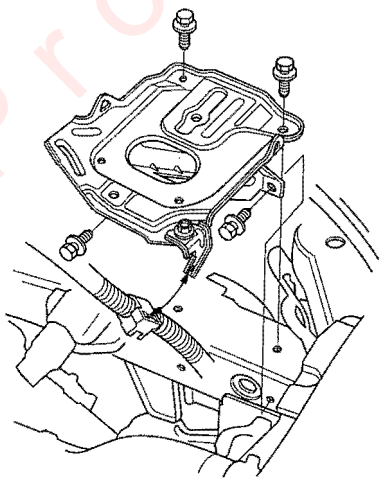

6. Remove the under-hood fuse/relay box.

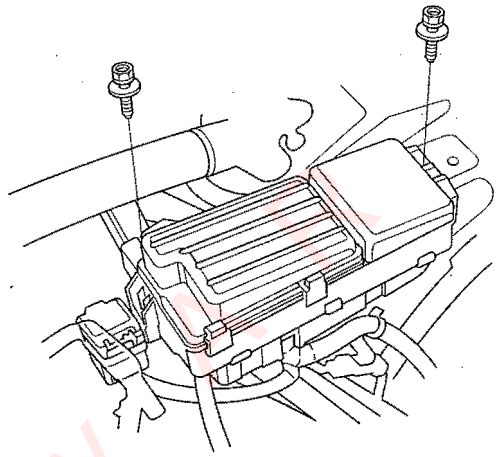

7. Remove the driver's dashboard lower cover (see page 20-82).

8. Pry out the lock pin (A), and pull the pedal pin (B) out of the yoke. Remove the master cylinder mounting nuts (C).

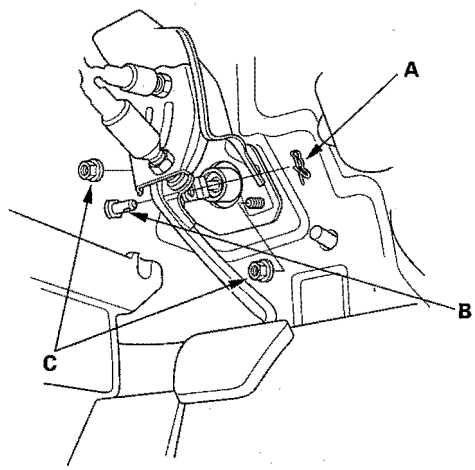

Protected by

9. Remove the reservoir mounting bolt (A).

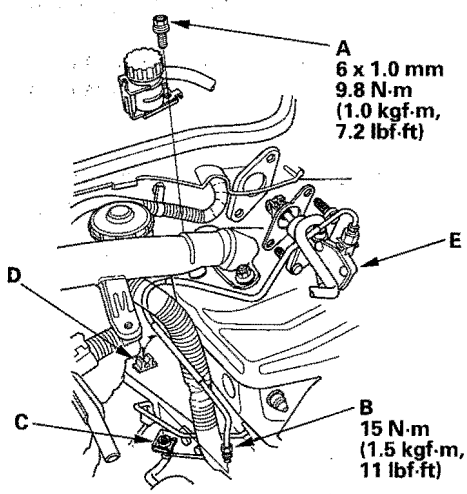

10. Disconnect the clutch line (B) from the bracket (C).

11. Remove the clutch line from the clamp (D).

12. Remove the clutch master cylinder (E).

13. Disconnect the reservoir hose (A), then remove the retaining clip (B) and remove the clutch line (C) from the clutch master cylinder (D). Plug the end of the reservoir hose and clutch line with a shop towel to prevent brake fluid from coming out.

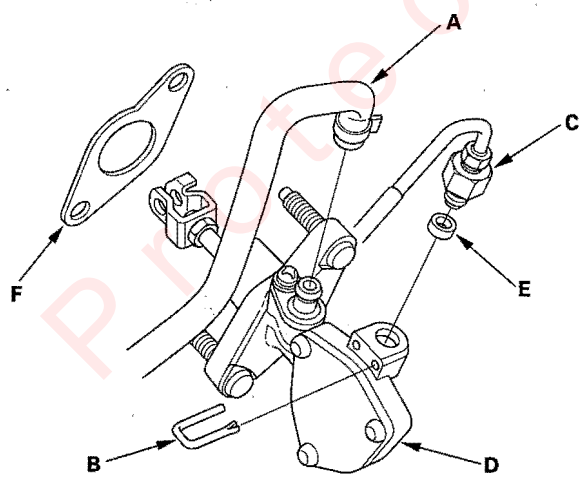

14. Remove the O-ring (E) and clutch master cylinder seal (F) from the clutch master cyliner.

15. Install the clutch master cylinder in the reverse order of removal, and note these items.

- Apply brake assembly lube to the clutch line, and install a new O-ring.
- Tighten the master cylinder mounting nuts to 13 N·m (1.3 kgf·m, 9.4 lbf·ft).
- Install the driver's dashboard lower cover.
- Install the under-hood fuse/relay box.
- Install the battery base.
- Install the air cleaner housing (see page 11-273).
- Install the battery.
- Reconnect the battery cables; positive (+) cable first, then the negative (−) cable.
- Install the left rear engine compartment cover and the left side engine compartment cover.
- Enter the anti-theft codes for the radio and the navigation system, then enter the customer's XM radio channel presets.

16. Make sure the hose clamps (A) are positioned on the master sylinder (B) and reservoir (C) as shown.

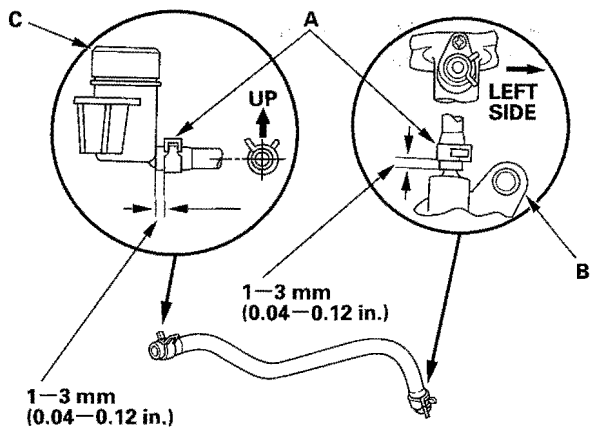

(cont'd)

Clutch Master Cylinder Replacement (cont'd)

17. To prevent the retaining clip (A) from coming off, pry open the tip of the retaining clip (B) with a screwdriver.

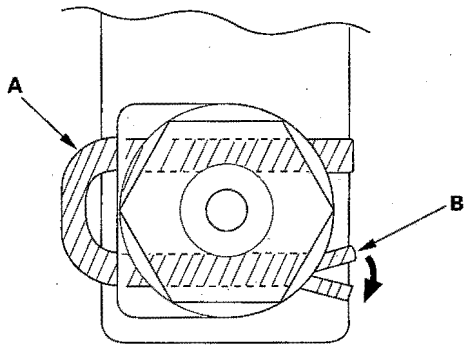

18. Bleed the clutch master hydraulic system (see step 10 on page 12-11).

19. Refill the brake fluid in the reservoir to the MAX (upper) level line (see step 11 on page 12-12).

Slave Cylinder Replacement

NOTE:
- Use fender covers to avoid damaging painted surfaces.
- Do not spill brake fluid on the vehicle; it may damage the paint; if brake fluid does contact the paint, wash it off immediately with water.

1. Remove the left rear engine compartment cover (A) and the left side engine compartment cover (B).

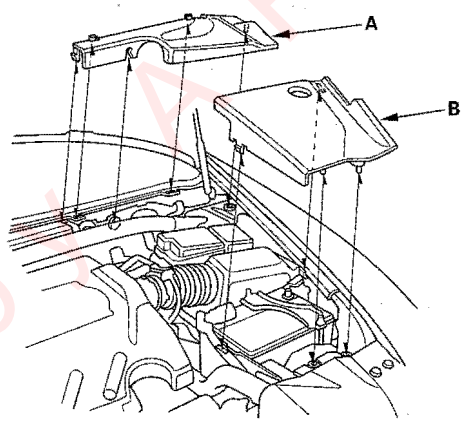

2. Make sure you have the anti-theft codes for the radio and the navigation system, then write down the customer's XM radio channel presets. Make sure the ignition switch is OFF.
   Disconnect the negative (−) cable first, then the positive (+) cable from the battery.
   Remove the battary.

3. Remove the air cleaner housing (see page 11-273).

4. Remove the battery base.

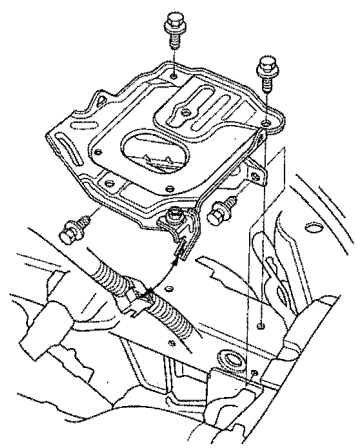

Protected by

5. Remove the mounting bolts (A), harness bracket (B), and slave cylinder (C).

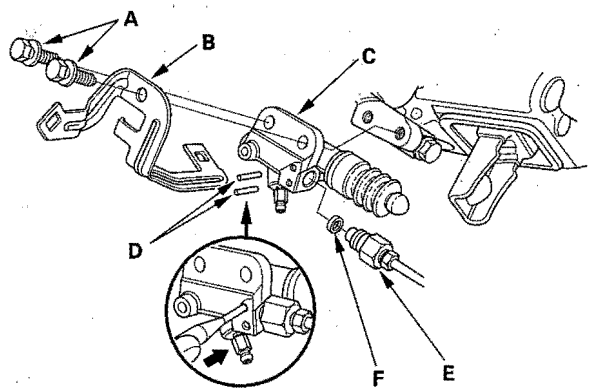

6. Remove the roll pins (D). Disconnect the clutch line (E), and remove the O-ring (F). Plug the end of the clutch line with a shop towel to prevent brake fluid from coming out.

7. Install the slave cylinder in the reverse order of removal. Install a new O-ring (A).

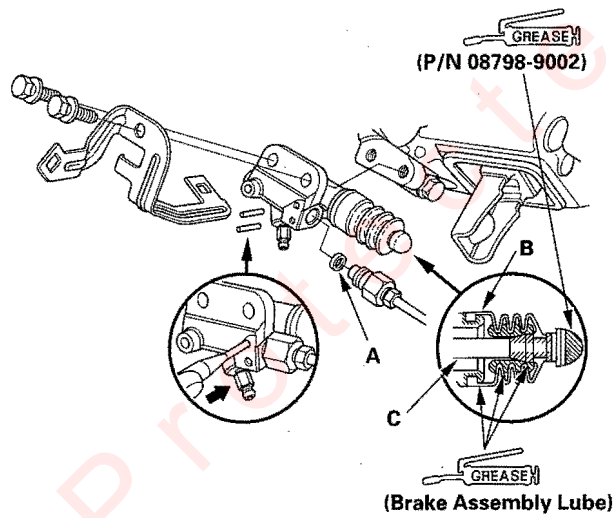

8. Pull back the boot (B), and apply brake assembly lube to the boot and slave cylinder rod (C). Reinstall the boot.

9. Apply super high temp urea grease (P/N 08798-9002) to the pushrod of the slave cylinder. Tighten the slave cylinder mounting bolts to 22 N· m (2.2 kgf·m, 16 lbf·ft).

10. Bleed the clutch hydraulic system.

- Attach a hose to the bleeder screw (A), and suspend the hose in a container of brake fluid.
- Make sure there is an adequate supply of fluid in the clutch master cylinder, then slowly pump the clutch pedal until no more bubbles appear at the bleeder hose.
- It may be necessary to limit the movement of the release fork (B) with a block of wood to remove all the air from the system.
- Tighten the bleeder screw to 8 N·m (0.8 kgf·m, 5.8 lbf·ft); do not overtighten it.
- Refill the clutch master cylinder with fluid when done.
- Use only Honda DOT 3 brake fluid.
- Confirm clutch operation and check for leaking fluid.

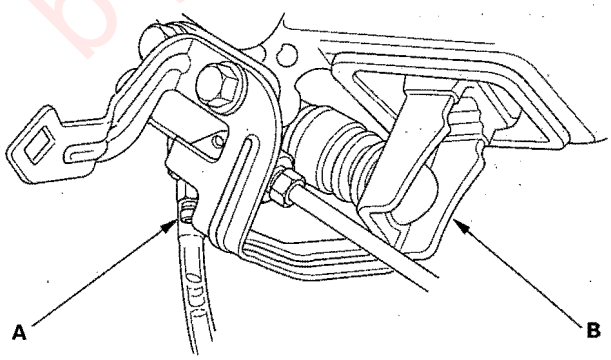

(cont'd)

Protected by FSR

Slave Cylinder Replacement (cont'd)

11. Make sure the fluid level in the reservoir is at the MAX (upper) level line (A).

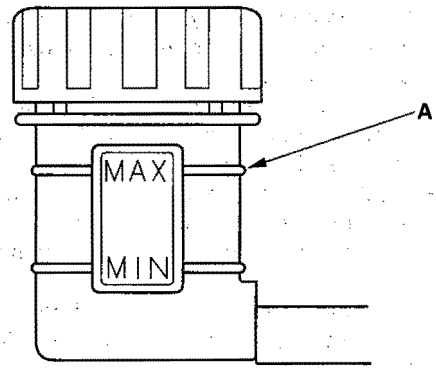

12. Install the battery base.
13. Install the air cleaner housing.
14. Install the battery.
15. Reconnect the battery cables; positive (+) cable first, then the negative (−) cable.
16. Install the left rear engine compartment cover and the left side engine compartment cover.
17. Enter the anti-theft codes for the radio and navigation system, then enter the customer's XM radio channel presets.

Clutch Replacement

Special Tools Required
- Pressure plate compressor 07AAE-P8EA000
- Clutch alignment shaft 07AAF-P8EA000
- Pressure plate compressor adapter 07AAK-P8EA000
- Ring gear holder 07LAB-PV00100 or 07924-PD20003
- Attachment, 37 x 40 mm 07746-0010200
- Driver 07749-0010000

NOTICE
You must use the special tools required to remove and install the clutch pressure plate or you will irreversibly damage it.

Pressure Plate and Clutch Disc Removal

1. Check the height of the diaphragm spring fingers using the special tool and a feeler gauge. If the height is more than the service limit, replace the pressure plate and clutch disc as a set.

Standard (New): 0.6 mm (0.02 in.) max.
Service Limit: 0.8 mm (0.03 in.)

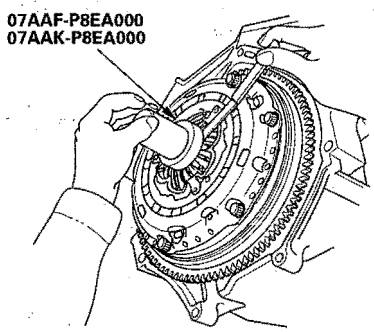

2. Install the special tools.

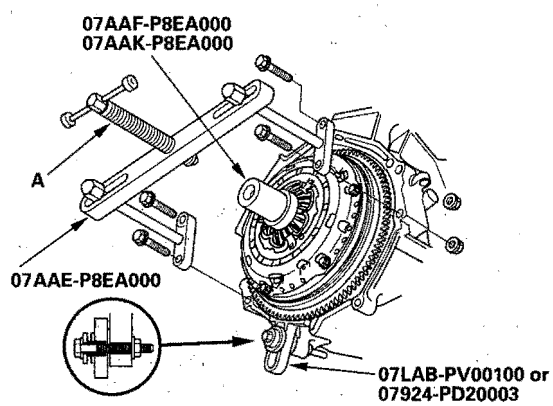

3. Turn the center screw (A) clockwise by hand to apply pressure on the diaphragm spring. Continue turning the center screw until it stops.

Protected by AR

4. Loosen the pressure plate mounting bolts (A) in the pattern shown in several steps, then remove the bolts.

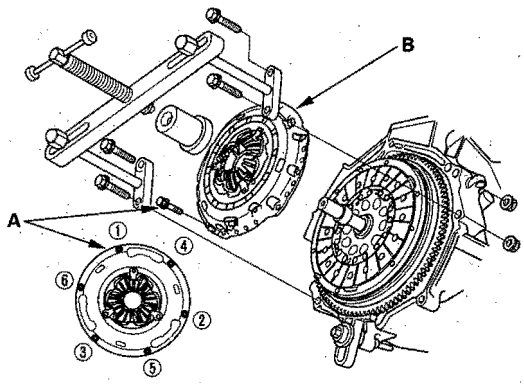

5. Turn the center screw on the pressure plate compressor counterclockwise by hand to release the pressure, then install two pressure plate mounting bolts, hand-tight, to hold the pressure plate (B). Remove the special tools and the pressure plate.

6. Inspect the fingers of the diaphragm spring (A) for wear at the release bearing contact area.

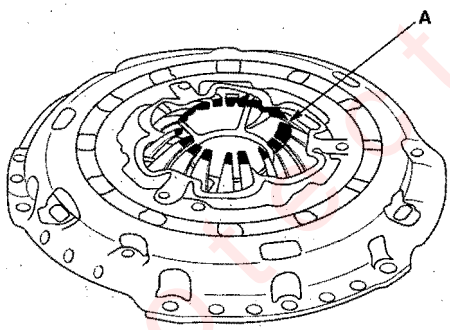

7. Inspect the pressure plate surface (A) for wear, cracks, and burning.

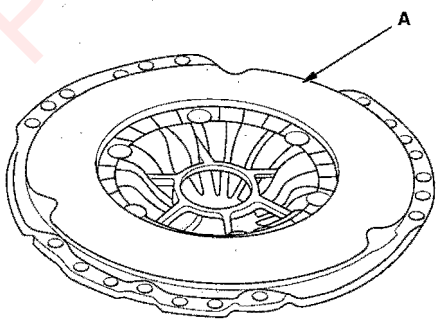

8. Inspect for warpage using a straight edge (A) and a feeler gauge (B). Measure across the pressure plate (C). If the warpage is more than the service limit, replace the pressure plate and clutch disc as a set.

Standard (New): 0.03 mm (0.001 in.) max.
Service Limit: 0.15 mm (0.006 in.)

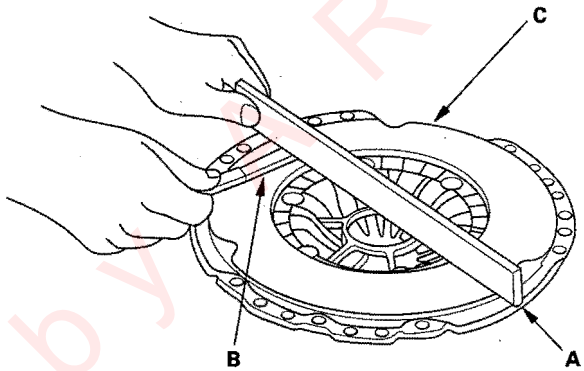

9. Remove the clutch disc and special tools.

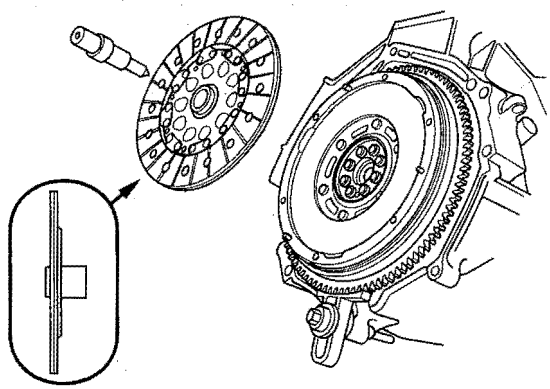

10. Inspect the lining of the clutch disc for signs of slipping or oil. If the clutch disc is burned black or oil soaked, replace it and the pressure plate as a set.

(cont'd)

Protected by R

Clutch Replacement (cont'd)

11. Measure the clutch disc thickness. If the thickness is less than the service limit, replace the clutch disc and pressure plate as a set.

Standard (New): 8.68—9.53 mm (0.342—0.375 in.)
Service Limit: 7.2 mm (0.283 in.)

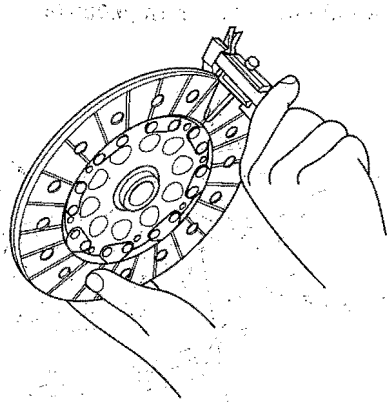

12. Measure the rivet depth from the clutch disc lining surface (A) to the rivets (B) on both sides. If the rivet depth is less than the service limit, replace the clutch disc and pressure plate as a set.

Standard (New): 1.0 mm (0.039 in.)
Service Limit: 0.2 mm (0.008 in.)

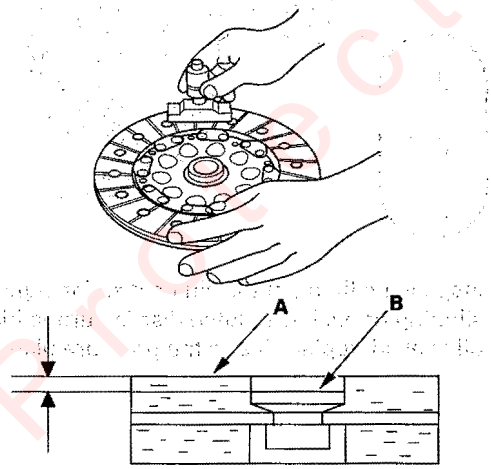

Flywheel and Pilot Bearing Inspection

1. Inspect the ring gear teeth for wear and damage.
2. Inspect the clutch disc mating surface on the flywheel for wear, cracks, and burning.
3. Measure the flywheel (A) runout using a dial indicator (B) through at least two full turns with the engine installed. Push against the flywheel each time you turn it to take up the crankshaft thrust washer clearance. If the runout is not within the standard, replace the flywheel, and recheck the runout. Resurfacing the flywheel is not recommended.

Standard (New): 0.05—0.45 mm (0.002—0.018 in).

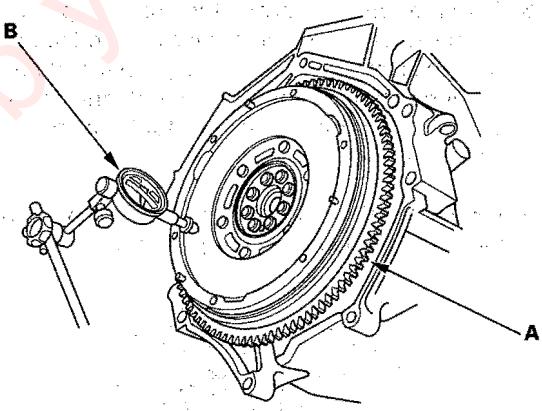

4. Turn the inner race of the pilot bearing with your finger. The pilot bearing should turn smoothly and quietly. Check that the pilot bearing outer race fits tightly in the flywheel. If the race does not turn smoothly, quietly, or fit tight in the flywheel, replace the pilot bearing.

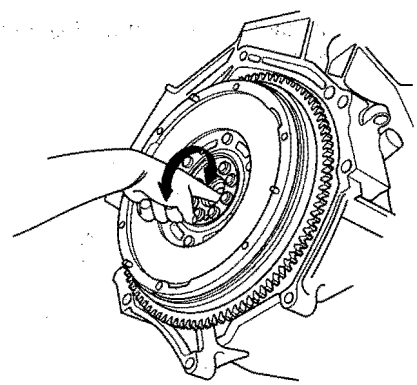

Protected by

Flywheel and Pilot Bearing Replacement

1. Install the special tool.

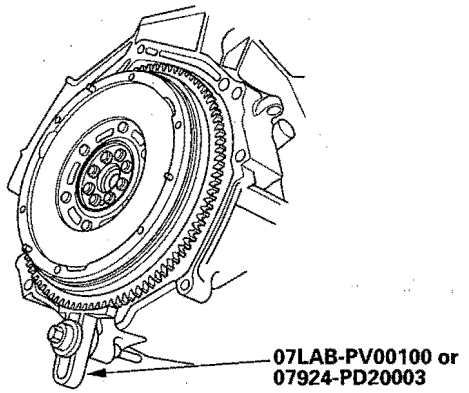

2. Remove the flywheel mounting bolts in a crisscross pattern in several steps, then remove the flywheel.

3. Remove the pilot bearing (A) from the flywheel (B).

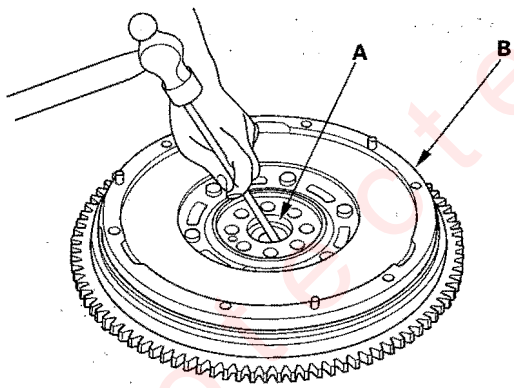

4. Install the new pilot bearing (A) into the flywheel using the special tools. Apply a light coat of oil to the bearing outer surface.

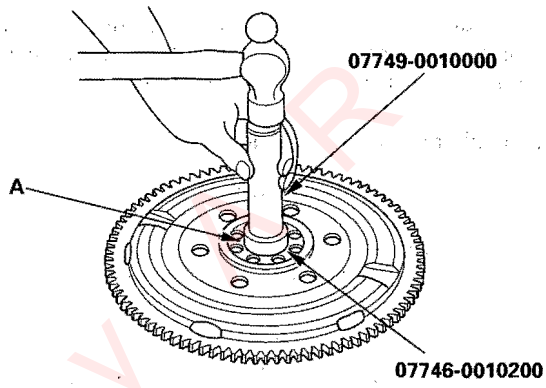

5. Install the flywheel and mounting bolts, finger-tight.

6. Install the special tool, then torque the flywheel mounting bolts in a crisscross pattern in several steps.

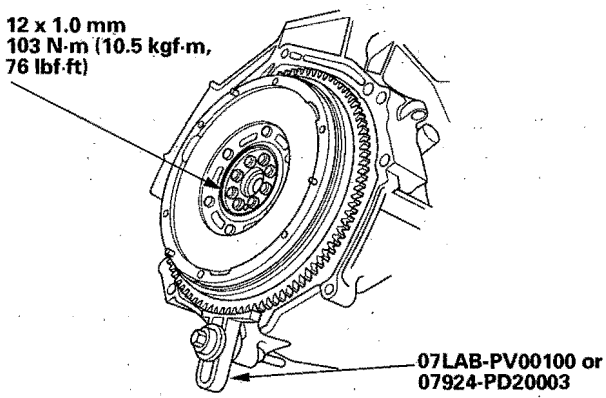

(cont'd)

Protected by CR

Clutch Replacement (cont'd)

Clutch Disc and Pressure Plate Installation

NOTE: The clutch disc and pressure plate are a matched set and must be replaced together.

1. Temporarily install the clutch disc onto the splines of the transmission mainshaft. Make sure the clutch disc slides freely on the mainshaft.

2. Install the ring gear holder.

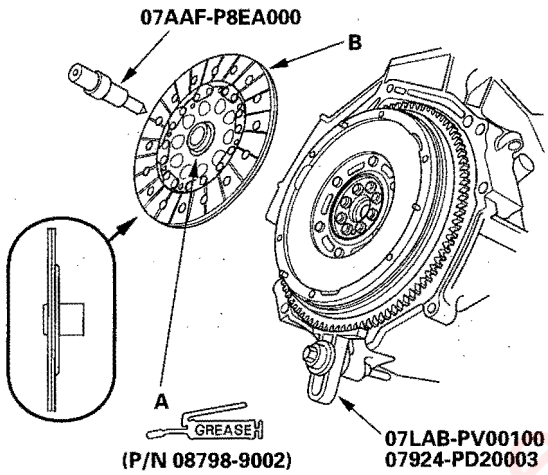

3. Apply super high temp urea grease (P/N 08798-9002) to the splines (A) of the clutch disc (B), then install the clutch disc using the special tools.

4. Align a point mark (A) across the pressure plate (B) and flywheel (C).

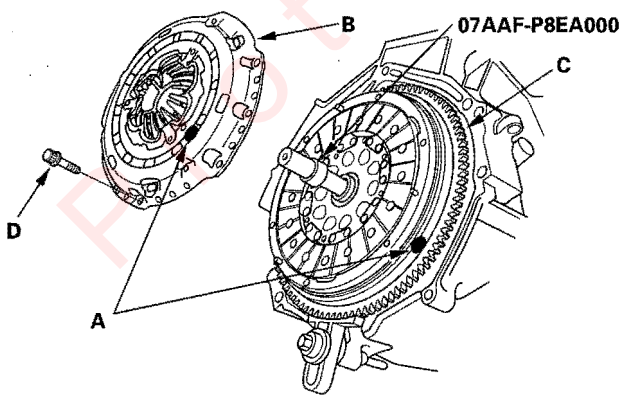

5. Install the pressure plate and the mounting bolts (D), finger-tight.

6. Install the special tools.

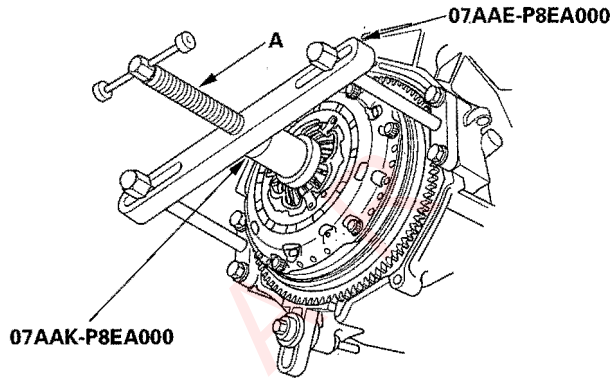

7. Turn the center screw (A) clockwise by hand to apply pressure on the diaphragm spring. Continue turning the center screw until it stops.

8. Be careful not to damage the pressure plate (A). Tighten (180 degrees apart) the pressure plate mounting bolts (B) in a star pattern in several steps.

PRESSURE PLATE MOUNTING BOLT TORQUE: 25 N·m (2.6 kgf·m, 19 lbf·ft)

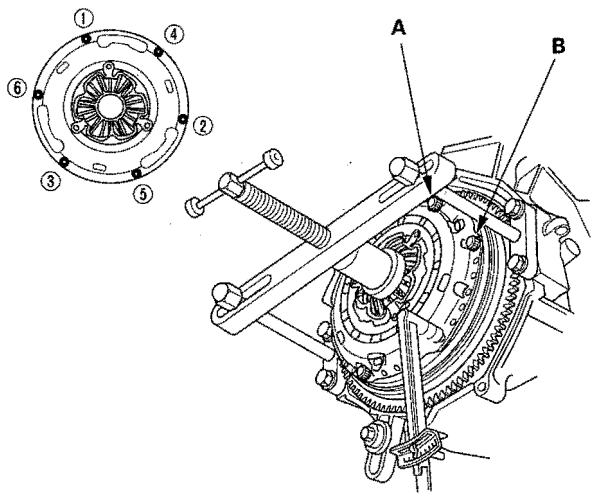

9. Turn the center screw on the pressure plate compressor counterclockwise by hand to release the pressure, then remove the special tools.

10. Make sure the diaphragm spring fingers are all the same height.

Protected by A

Release Bearing Replacement

1. Remove the release fork boot (A) from the clutch housing (B).

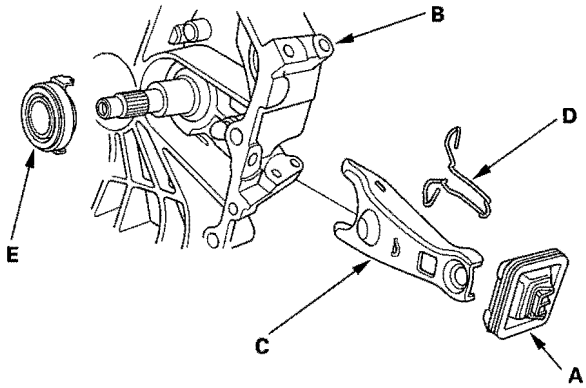

2. Remove the release fork (C) from the clutch housing by squeezing the release fork set spring (D). Remove the release bearing (E).

3. Check the play of the release bearing by spinning it with your hand. If there is excessive play, replace the release bearing.

   NOTE: The release bearing is packed with grease. Do not wash it in solvent.

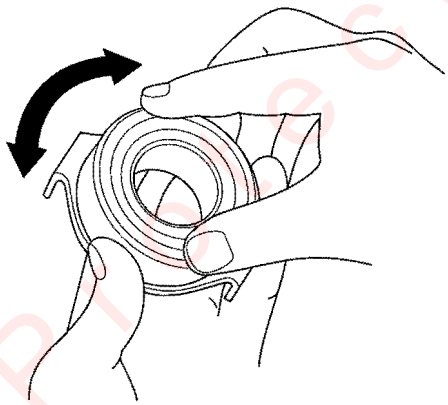

4. Apply super high temp urea grease (P/N 08798-9002) to the release fork (A), the release fork bolt (B), the release bearing (C), and the release fork set spring (D) in the shaded areas.

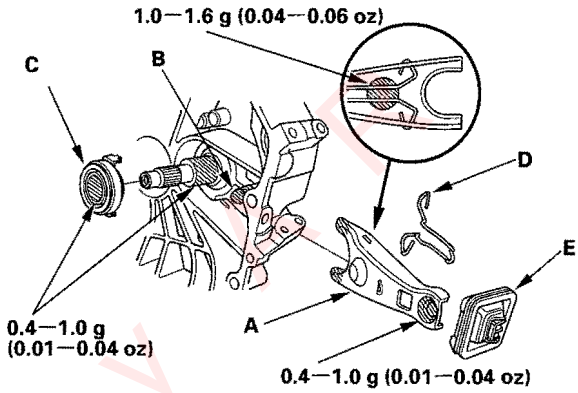

5. With the release fork slid between the release bearing pawls, install the release bearing on the mainshaft while inserting the release fork through the hole in the clutch housing.

6. Align the detent of the release fork with the release fork bolt, then press the release fork over the release fork bolt squarely.

7. Install the release fork boot (E). Make sure the boot seals around the release fork and clutch housing.

8. Move the release fork (A) right and left to make sure that it fits properly against the release bearing (B) and that the release bearing slides smoothly. Wipe off any extra grease.

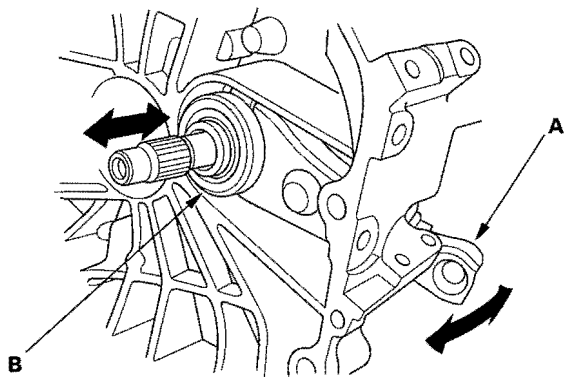

Protected by

Manual Transmission

Special Tools 13-2

Reverse Lockout System

General Troubleshooting Information 13-3
Component Location Index 13-4
System Description 13-5
Circuit Diagram 13-6
Circuit Troubleshooting 13-6
Reverse Lockout Solenoid Test 13-8
Reverse Lockout Solenoid Assembly Disassembly/Reassembly 13-8

Manual Transmission

Transmission Fluid Inspection and Replacement 13-10
Back-up Light Switch Test 13-12
Transmission Removal 13-13
Transmission Installation 13-22
Transmission Disassembly 13-32
Reverse Shift Lever Clearance Inspection 13-38
Select Arm Clearance Inspection 13-39
Shift Arm Clearance Inspection 13-40
Oil Pump Clearance Inspection 13-40
Shift Fork Clearance Inspection 13-41
Shift Fork Disassembly/Reassembly 13-43
Mainshaft Assembly Clearance Inspection 13-44
Mainshaft Disassembly 13-47
Mainshaft Inspection 13-48
Mainshaft Reassembly 13-49
Countershaft Assembly Clearance Inspection 13-53
Countershaft Disassembly 13-54
Countershaft Inspection 13-55
Countershaft Reassembly 13-56
Reverse Idler Gear Shaft Assembly Disassembly/Reassembly 13-62
Synchro Sleeve and Hub Inspection and Reassembly 13-63
Synchro Ring and Gear Inspection 13-63
Mainshaft Oil Seal Replacement 13-65
Countershaft Bearing Replacement 13-65
Mainshaft Thrust Clearance Adjustment 13-66
Transmission Reassembly 13-69
Gearshift Mechanism Replacement 13-76
Shift Lever Housing Replacement 13-77

M/T Differential

Component Location Index 13-78
Limited Slip Differential Check ... 13-79
Differential Carrier, Final Driven Gear Replacement 13-80
Carrier Bearing Replacement 13-80
Oil Seal Replacement 13-81
Bearing Outer Race Replacement 13-82
Carrier Bearing Preload Adjustment 13-83

Protected by AR

Special Tools

Ref.No.	Tool Number	Description	Qty
*①	07GAJ-PG20110	Mainshaft Holder	1
*②	07GAJ-PG20130	Mainshaft Base	1
③	07NAD-PX40100	Attachment, 78 x 80 mm	1
④	07NAD-P20A100	Oil Seal Driver Attachment	1
⑤	07PAF-0030100	Installer, 46 mm I.D.	1
⑥	07SAZ-001000A	Backprobe Set	2
⑦	07XAJ-S0KA100	Preload Inspection Tool	1
**⑧	07YAC-0010100	Adjustable Bearing Puller, 45—75 mm	1
⑨	070AD-PYZA100	Driver, 56 x 62 mm	1
⑩	07746-0010300	Attachment, 42 x 47 mm	1
⑪	07746-0010600	Attachment, 72 x 75 mm	1
⑫	07746-0030100	Driver, 40 mm I.D.	1
⑬	07749-0010000	Driver	1
⑭	07946-MB00000	Driver, 30 mm I.D.	1

* Part of Mainshaft Inspection Tool Set, 07GAJ-PG20102.

* * Must be used with commercially available 3/8"-16 Slide Hammer.

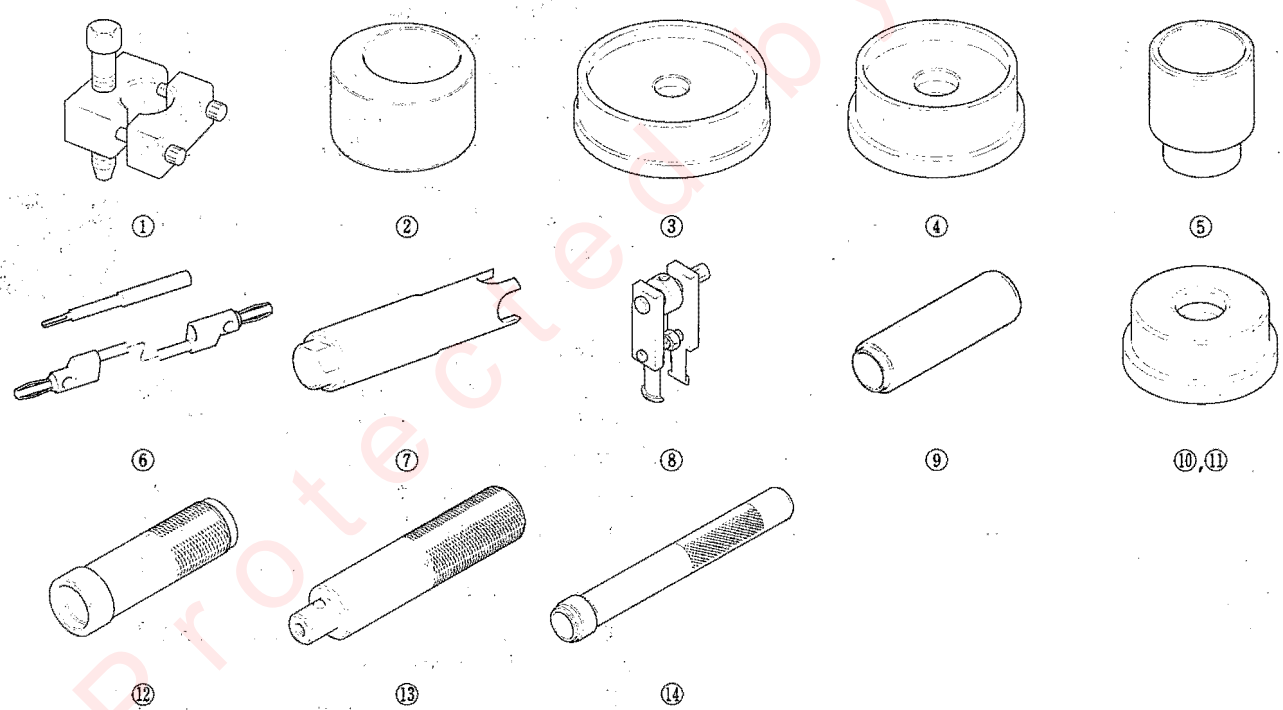

Protected by A R

General Troubleshooting Information

How to Troubleshoot Circuits at the ECM

Special Tools Required
Backprobe set 07SAZ-001000A (2 required)

1. Connect the backprobe adapters (A) to the stacking patch cords (B), and connect the cords to a digital multimeter (C).

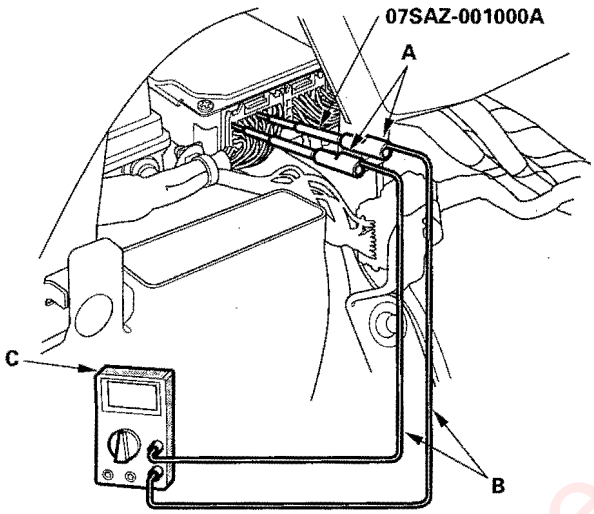

2. Using the wire insulation as a guide for the contoured tip of the backprobe adapter, gently slide the tip into the connector from the wire side until it touches the end of the wire terminal.

Protected by AR

Reverse Lockout System

Component Location Index

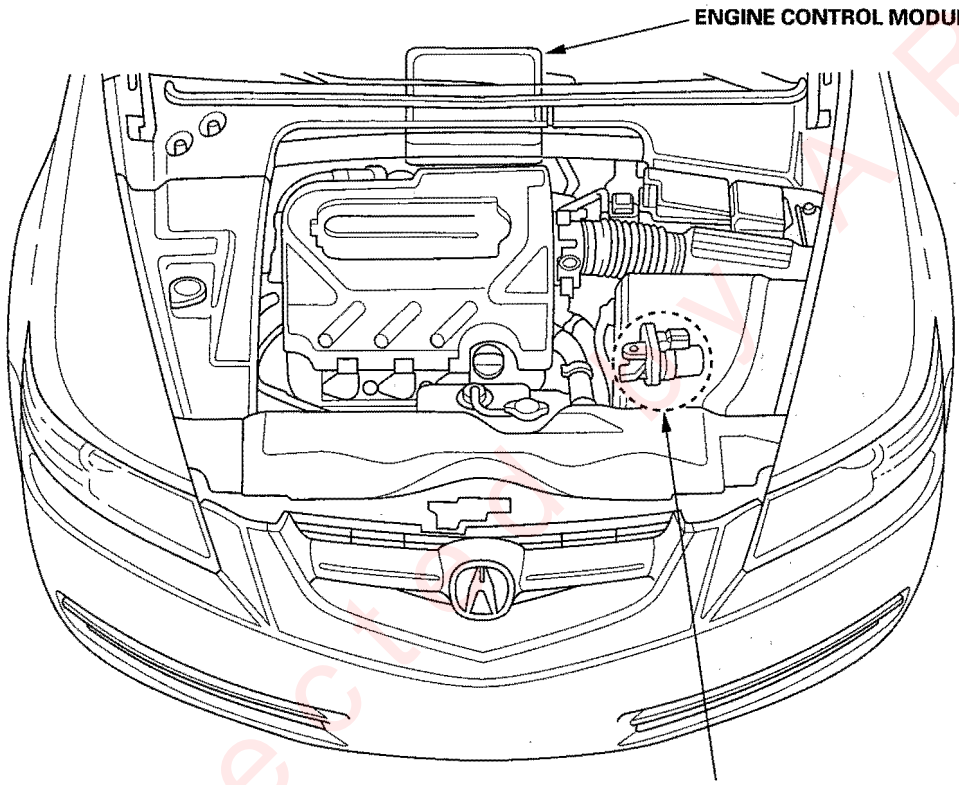

REVERSE LOCKOUT SOLENOID
Test, page 13-8
Disassembly/Reassembly, page 13-8

Protected by MAR

System Description

At a vehicle speed of 12 mph (20 km/h) or more, a signal from the ECM activates the reverse lockout solenoid, which pushes the select lock cam and select lock pin into the locked position. As a result, the interlock cannot rotate to the reverse select position, making it impossible to engage reverse gear. At a vehicle speed of 9 mph (15 km/h) or less, the signal from the ECM is interrupted which turns off the reverse lockout solenoid. The return spring pulls back the select lock pin, enabling the interlock to move freely so that reverse gear can be selected.

Vehicle speed	Inhibitor	Reverse selection
Above 12 mph (20 km/h)	ON	Not allowed
Below 9 mph (15 km/h)	OFF	OK
IG-S/W OFF	OFF	OK

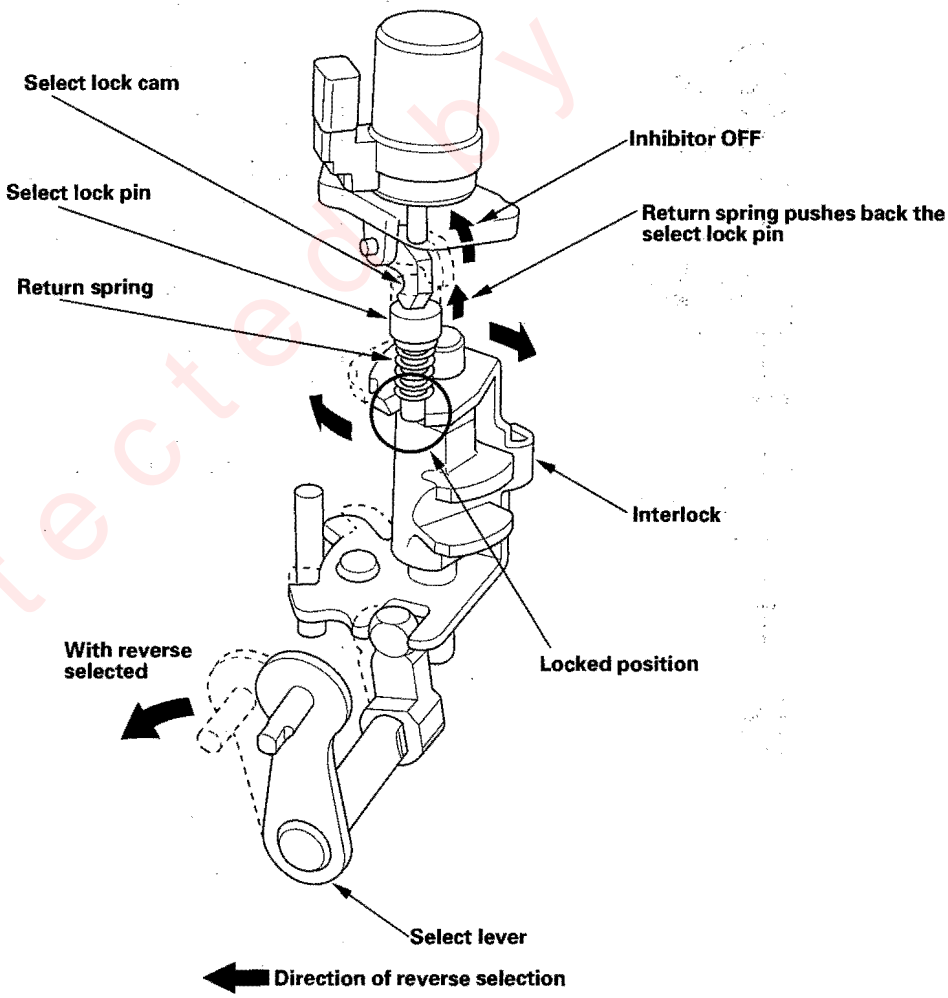

Protected by A R

Reverse Lockout System

Circuit Diagram

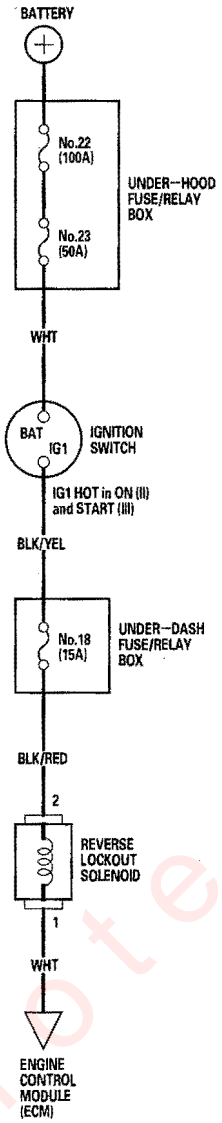

Circuit Troubleshooting

1. Check the No. 18 (15A) fuse in the under-dash fuse/relay box.

   Is the fuse OK?

   YES – Go to step 2.

   NO – Replace the fuse, and recheck. ■

2. Start the engine, and check the Malfunction Indicator Lamp (MIL).

   Does the MIL come on?

   YES – Troubleshoot the DTC (see page 11-3), and recheck. ■

   NO – Go to step 3.

3. Turn the ignition switch OFF.

4. Shift into reverse gear.

   Can the transmission be shifted into reverse gear?

   YES – Go to step 5.

   NO – Repair the transmission, and recheck. ■

5. Turn the ignition switch ON (II). With the vehicle moving slowly (vehicle speed below 9 mph (15 km/h)), shift the transmission into reverse gear.

   Can the transmission be shifted into reverse gear?

   YES – Go to step 6.

   NO – Go to step 7.

6. Raise the front wheels, and block the rear wheels. Run the engine so the speedometer reads above 12 mph (20 km/h).

   Can the transmission be shifted into reverse gear?

   YES – Go to step 7.

   NO – Intermittent failure, system is OK at this time. ■

Protected by A R

7. Turn the ignition switch OFF.

8. Disconnect the reverse lockout solenoid 2P connector.

9. Turn the ignition switch ON (II).

10. Measure the voltage between the reverse lockout solenoid 2P connector terminal No. 2 and body ground.

REVERSE LOCKOUT SOLENOID 2P CONNECTOR

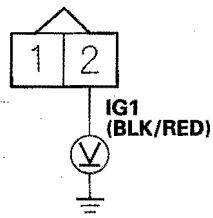

Wire side of female terminals

Is there battery voltage?

YES—Go to step 11.

NO—Check for loose or poor connections. If the connections are OK, repair open in the wire between the No. 18 (15A) fuse in the under-dash fuse/relay box and the reverse lockout solenoid. ■

11. Turn the ignition switch OFF.

12. Remove the reverse lockout solenoid (see page 13-8).

13. Connect the No. 2 terminal of the reverse lockout solenoid to the battery positive terminal, and connect the No. 1 terminal to the battery negative terminal. Check that the reverse lockout solenoid operates.

REVERSE LOCKOUT SOLENOID 2P CONNECTOR

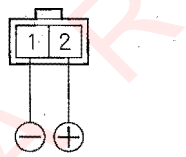

Terminal side of male terminals

Does the reverse lockout solenoid operate properly?

YES—Go to step 14.

NO—Replace the reverse lockout solenoid. ■

14. Reinstall the reverse lockout solenoid, and reconnect the solenoid 2P connector.

15. Turn the ignition switch ON (II).

16. Measure the voltage between ECM connector A22 and body ground.

ECM CONNECTOR A

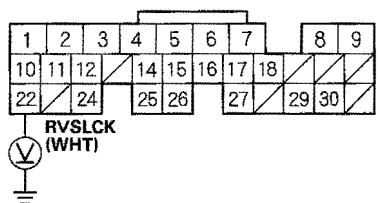

Wire side of female terminals

Is there battery voltage?

YES—Check for loose connectors at ECM connector A (31P). If necessary, update the ECM if it does not have the latest software, or substitute a known-good ECM, then recheck (see page 11-6). If the symptom/indication goes away with a known-good ECM, replace the original ECM. ■

NO—Repair open in the wire between reverse lockout solenoid and the ECM (A22). ■

Protected by AR

Reverse Lockout Solenoid Test

1. Remove the reverse lockout solenoid (see page 13-8).
2. Connect the battery positive terminal to the No. 2 terminal of the reverse lockout solenoid 2P connector, and connect the battery negative terminal to the No. 1 terminal.

REVERSE LOCKOUT SOLENOID 2P CONNECTOR

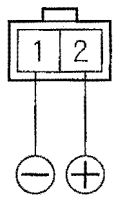

Terminal side of male terminals

3. Check that the reverse lockout solenoid operates.
4. If the reverse lockout solenoid does not work, replace it.

Reverse Lockout Solenoid Disassembly/Reassembly

1. Lay the fender cover over the fender, then remove the left rear engine compartment cover (A) and the left side engine compartment cover (B).

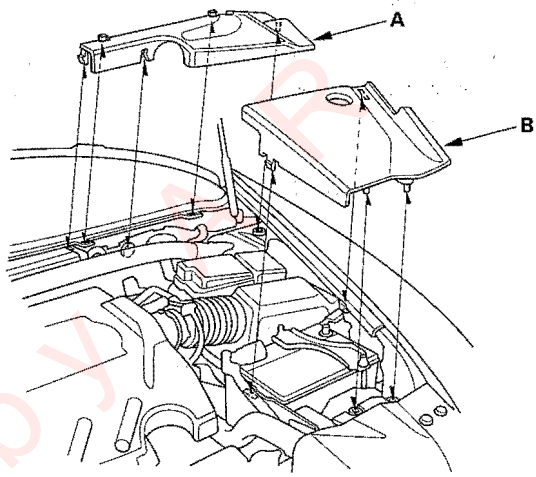

2. Make sure you have the anti-theft codes for the radio and the navigation system, then write down the customer's XM radio channel presets. Make sure the ignition switch is OFF.
   Disconnect the negative (−) cable first, then the positive (+) cable from the battery. Remove the battery.
3. Remove the air cleaner housing (see page 11-273).
4. Remove the battery base.

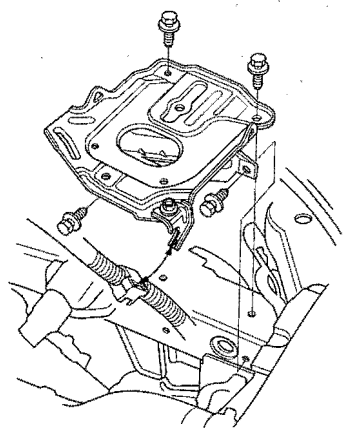

Protected by

5. Carefully remove the shift cable, select cable, and cable bracket together to avoid bending the cables (see step 17 on page 13-16).

6. Disconnect the reverse lockout solenoid connector.

7. Remove the bolts (A), transmission harness stay (B), and reverse lockout solenoid assembly (C).

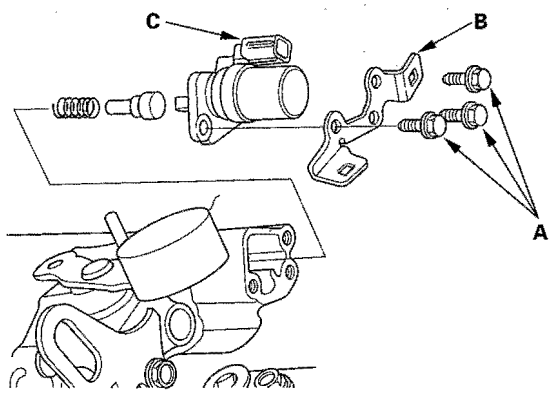

8. Remove the roller (A) and select lock cam (B).

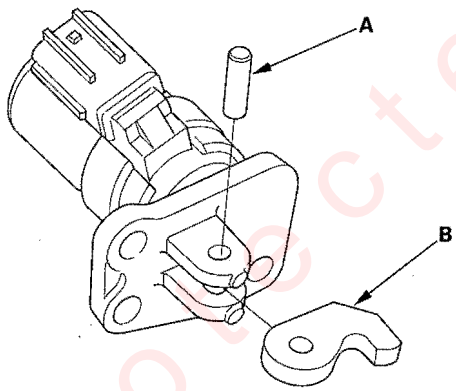

9. Install in the reverse order of removal.

10. Remove the dirt and oil from the sealing surface. Apply liquid gasket (P/N 08718-0001) to the sealing surface.

    NOTE: If 4 minutes have passed after applying the liquid gasket, reapply it, and install the solenoid. Allow it to cure at least 20 minutes after assembly before filling the transmission with oil.

11. Install the reverse lockout solenoid assembly (A) and transmission harness stay (B).

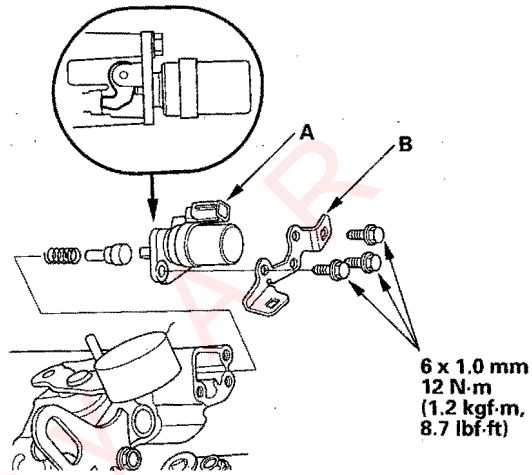

12. Connect the reverse lockout solenoid connector.

13. Install the cable bracket, select cable, and shift cable (see step 37 on page 13-28).

14. Install the battery base (see step 48 on page 13-30).

15. Install the air cleaner housing (see page 11-273).

16. Install the battery. Connect the positive (+) cable first, then the negative (−) cable to the battery.

17. Install the left rear engine compartment cover and the left side engine compartment cover.

18. Enter the anti-theft codes for the radio and navigation system, then enter the customer's XM radio channel presets.

    NOTE: The radio presets are no longer lost when the battery is disconnected.

Protected by ARR

Transmission Fluid Inspection and Replacement

1. Park the vehicle on level ground, and turn the ignition switch OFF.

2. Remove the under cover (see step 30 on page 13-18).

3. Remove the oil check bolt (A) and washer (B). Check the condition of the fluid. If the fluid is dirty, remove the drain plug (C) and washer (D).

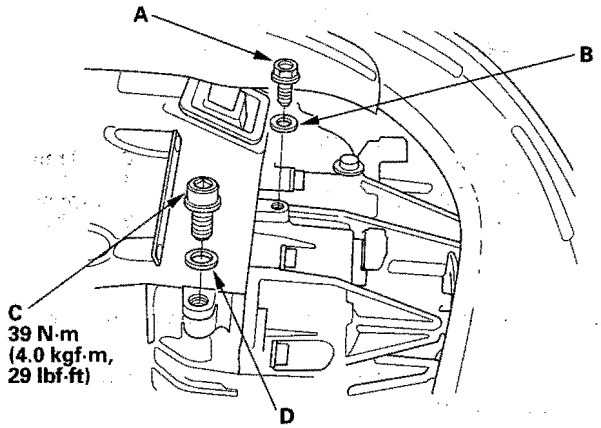

4. Install the drain plug with a new washer.

5. Lay the fender cover over the fender, then remove the left rear engine compartment cover (A) and the left side engine compartment cover (B).

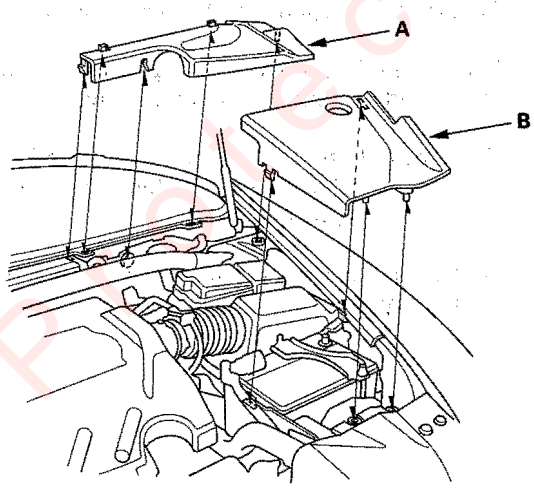

6. Make sure you have the anti-theft codes for the radio and the navigation system, then write down the customer's XM radio channel presets. Make sure the ignition switch is OFF.
Disconnect the nagative (−) cable first, then the positive (+) cable from the battery. Remove the battery.

7. Remove the air cleaner housing (see page 11-273).

8. Remove the battery base.

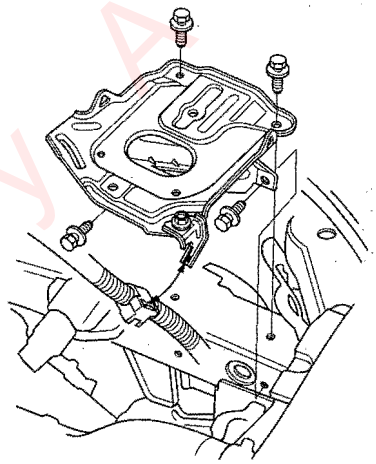

9. Remove the oil filler plug (A) and washer (B).

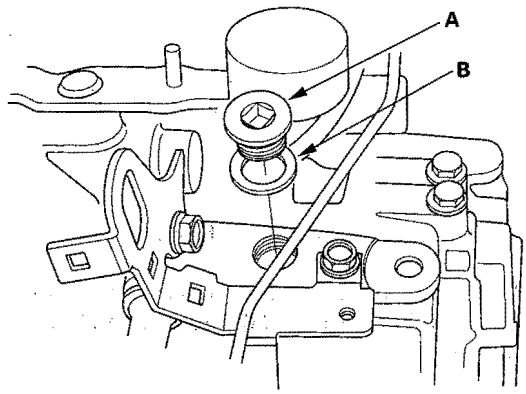

Protected by AR

10. Refill the fluid from the oil filler plug hole of transmission, and until the transmission fluid overflows from the oil check bolt hole (A).

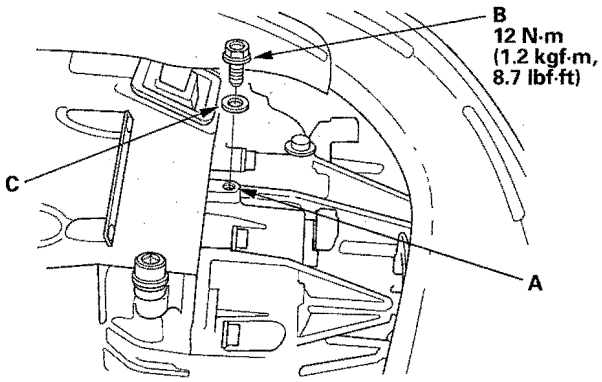

11. After the fluid stops overflowing, install the oil check bolt (B) with a new washer (C).

    Fluid Capacity
    2.2 ℓ (2.3 US qt) at fluid change
    2.5 ℓ (2.6 US qt) at overhaul

    Always use Honda Manual Transmission Fluid (MTF). Using engine oil can cause stiffer shifting because it does not contain the proper additives.

12. Install the oil filler plug (A) with a new washer (B).

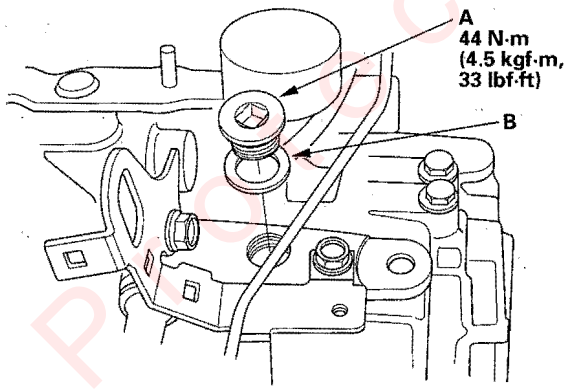

13. Install the battery base.

14. Install the air cleaner housing (see page 11-273).

15. Install the battery. Connect the positive (+) cable first, then the negative (−) cable to the battery.

16. Install the left rear engine compartment cover and the left side engine compartment cover.

17. Enter the anti-theft codes for the radio and navigation system, then enter the customer's XM radio channel presets.

Protected by AR

Back-up Light Switch Test

1. Lay the fender cover over the fender, then remove the left rear engine compartment cover (A) and the left side engine compartment cover (B).

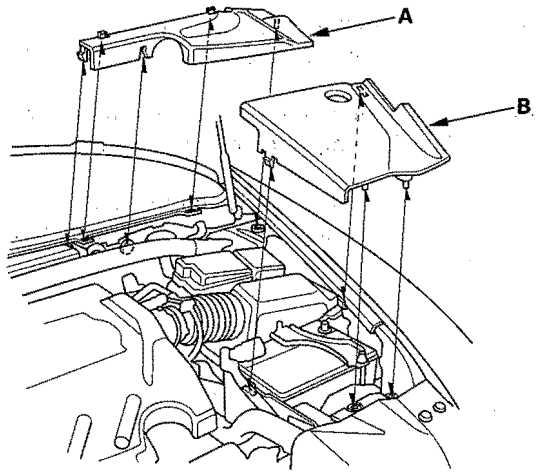

2. Make sure you have the anti-theft codes for the radio and the navigation system, then write down the customer's XM radio channel presets. Make sure the ignition switch is OFF.
Disconnect the nagative (−) cable first, then the positive (+) cable from the battery. Remove the battery.

3. Remove the air cleaner housing (see page 11-273).

4. Remove the battery base.

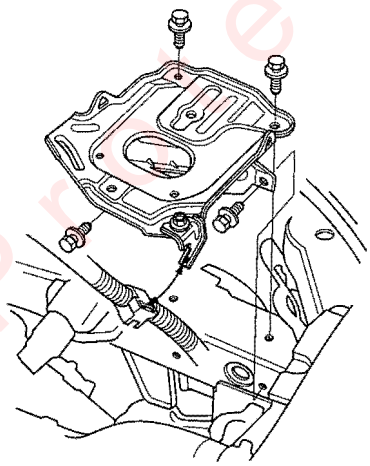

5. Disconnect the back-up light switch (A) 2P connector.

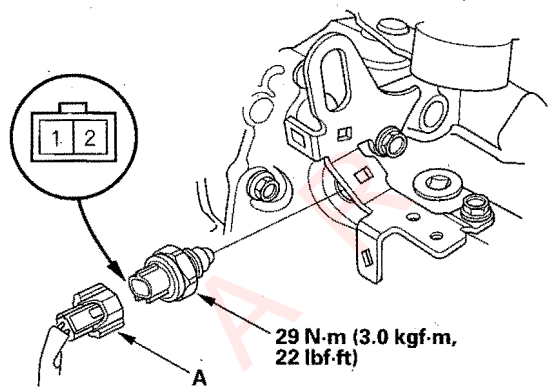

6. Check for continuity between the No. 1 and No. 2 terminals of the back-up light switch 2P connector. There should be continuity when the shift lever is in reverse.

7. If necessary, replace the back-up light switch. Apply liquid gasket (P/N 08718-0001) to the switch, and install it on the transmission housing. Tighten the back-up light switch to the specified torque.

8. Install the battery base.

9. Install the air cleaner housing (see page 11-273).

10. Install the battery. Connect the positive (+) cable first, then the negative (−) cable to the battery.

11. Install the left rear engine compartment cover and the left side engine compartment cover.

12. Enter the anti-theft codes for the radio and navigation system, then enter the customer's XM radio channel presets.

Protected by A

Transmission Removal

Special Tools Required
- Engine support hanger, A and Reds AAR-T-12566 (Available through the Honda Tool and Equipment Program 888-424-6857)
- Engine hanger balance bar VSB02C000019
- Front subframe adapter VSB02C000016

NOTE: Use fender covers to avoid damaging painted surfaces.

1. Set the wheels in the straight ahead position.

2. Lock the steering wheel.

3. Disconnect the support struts from both sides of the pivot ball (bolted to the hood). Secure the hood (A) in a vertical position. Remove the right side pivot ball, and install it into the lower threaded hole (B), then reattach the support strut.

   NOTE: Do not attempt to close the hood with the support strut in the vertical position; it will damage the support sturt and hood.

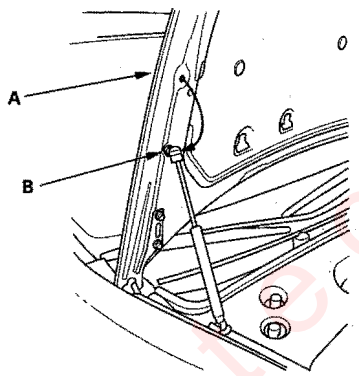

4. Remove the left rear engine compartment cover (A) and the left side engine compartment cover (B).

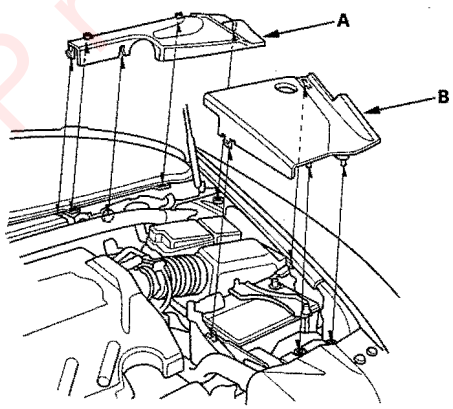

5. Remove the right side engine compartment cover (A) and the right rear engine compartment cover (B).

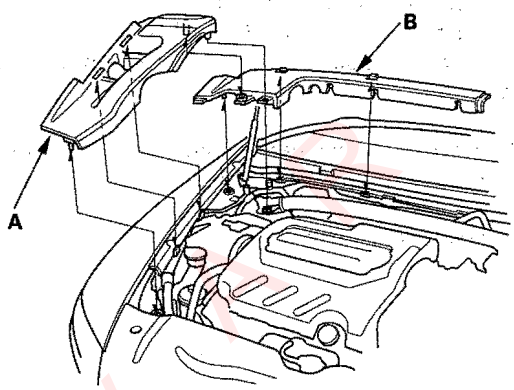

6. Remove the intake manifold cover (A) and the bulkhead cover (B).

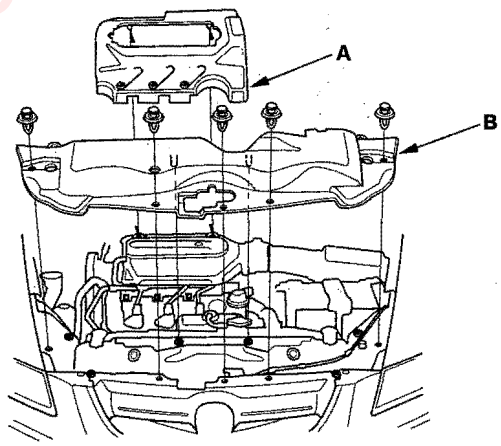

(cont'd)

Protected by

Transmission Removal (cont'd)

7. Make sure you have the anti-theft codes for the radio and the navigation system, then write down the customer's XM radio channel presets. Make sure the ignition switch is OFF.
   Disconnect the negative (−) cable first, then the positive (+) cable from the battery. Remove the battery.

8. Remove the air cleaner housing and resonator chamber (see page 11-273).

9. Remove the battery base.

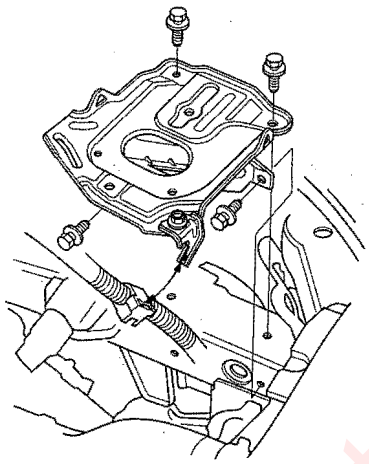

10. Remove the under-hood fuse/relay box.

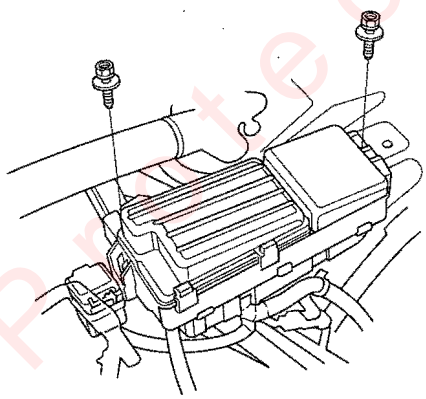

11. Remove the strut bar.

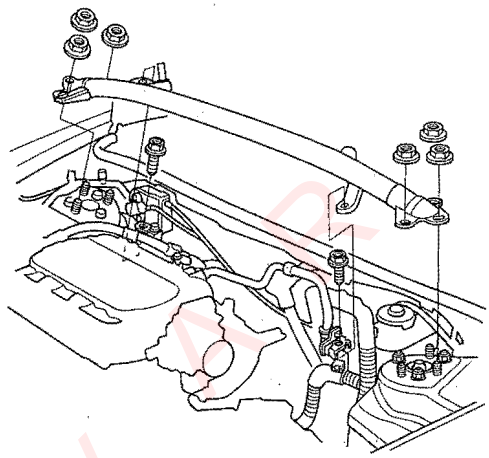

12. Disconnect the back-up light switch connector (A) and reverse lockout solenoid connector (B), then remove the harness clips (C).

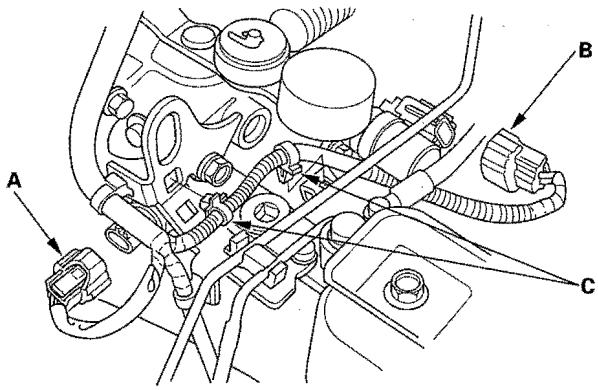

Protected by ARR

13. Disconnect the input shaft (mainshaft) speed sensor connector (A) and output shaft (countershaft) speed sensor connector (B).

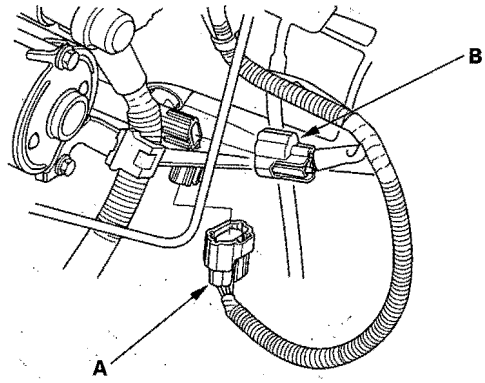

14. Remove the harness clips (A), then disconnect the vacuum hose (B).

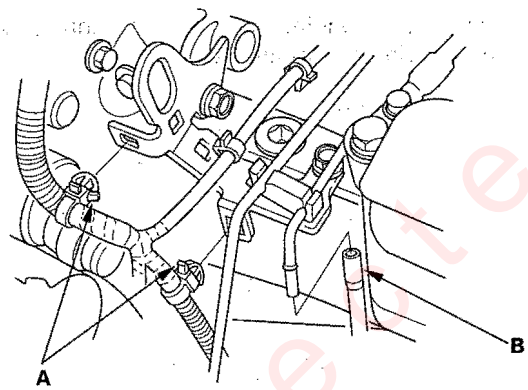

15. Disconnect the starter cable (A), then remove the starter motor (B).

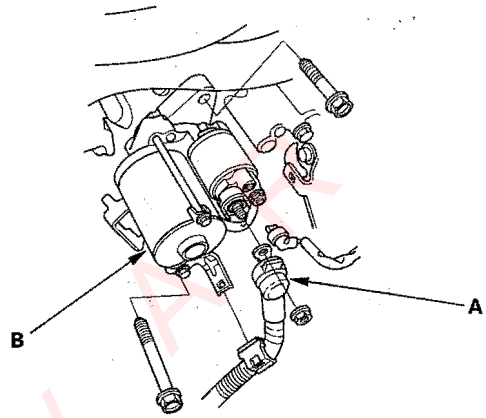

16. Remove the harness bracket.

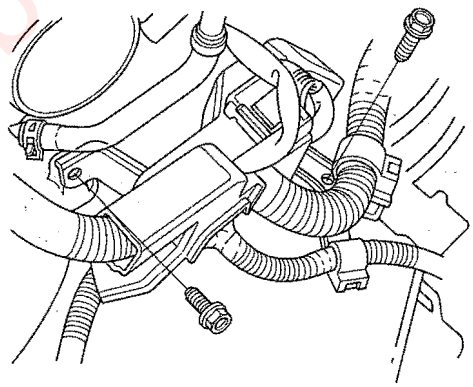

Protected by AIR

(cont'd)

Transmission Removal (cont'd)

17. Remove the cable bracket (A), then disconnect the cables (B) from the top of the transmission housing. Carefully remove both cables and the bracket together to avoid bending the cables.

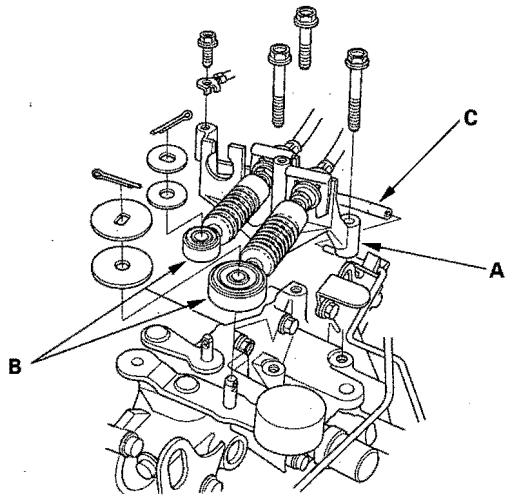

18. Disconnect the vacuum hose (C).

19. Carefully remove the slave cylinder without bending the clutch line. Do not press the clutch pedal once the slave cylinder has been removed.

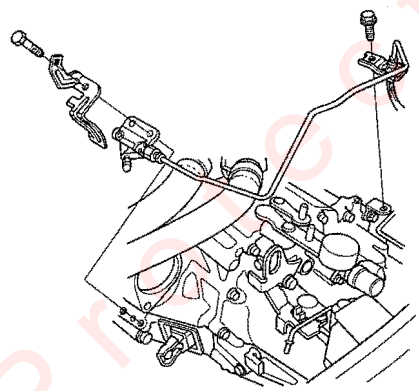

20. Remove the engine front mount mounting nuts (A), engine front mount stop (B), and the engine front mount mounting bolt (C).

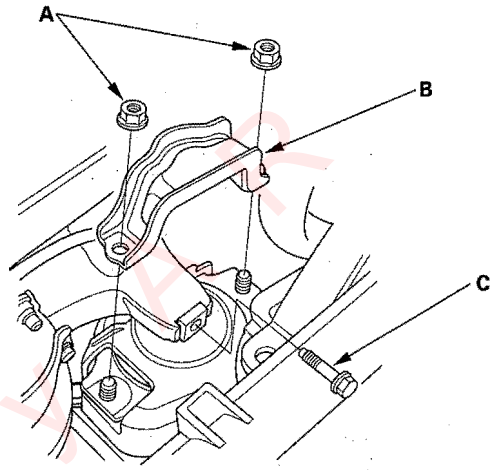

21. Remove the engine rear mount mounting nuts (A) and engine rear mount stop (B).

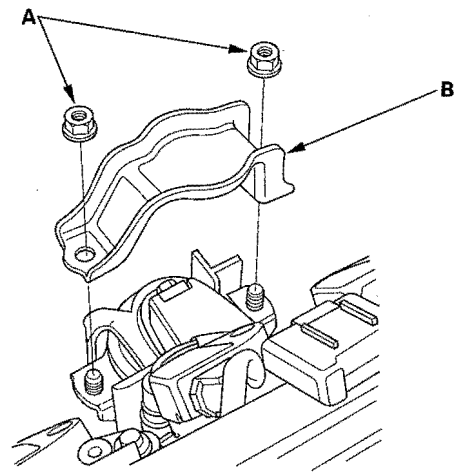

Protected by

22. Remove the transmission upper mounting bolts.

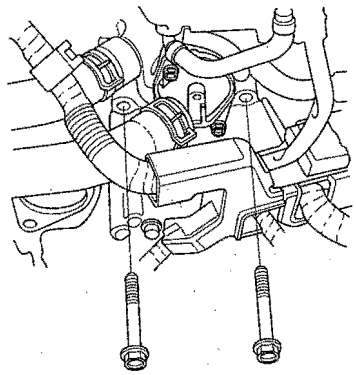

23. Remove and plug the return hose (A) from the power steering fluid reservoir (B). Wipe off any spilled fluid at once.

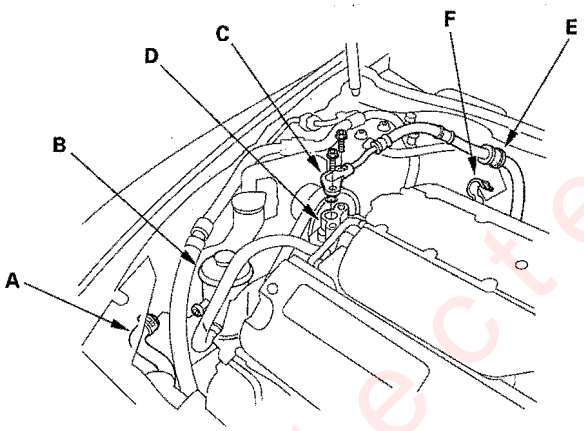

24. Remove the power steering pump outlet line (C) from the power steering pump (D), and remove the hose (E) from its clamp (F).

25. Lift and support the engine with the engine support hanger (A) and the engine balance bar (B). Attach the front arm (C) to the front cylinder head with a spacer (D) and the 10 x 1.25 mm bolt (E). Attach the rear arm (F) to the rear cylinder head with the 8 x 1.25 mm bolt (G).

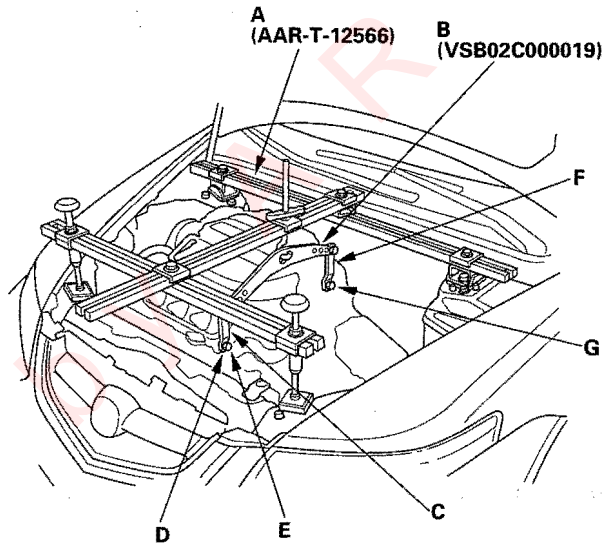

26. Remove the steering joint cover (A).

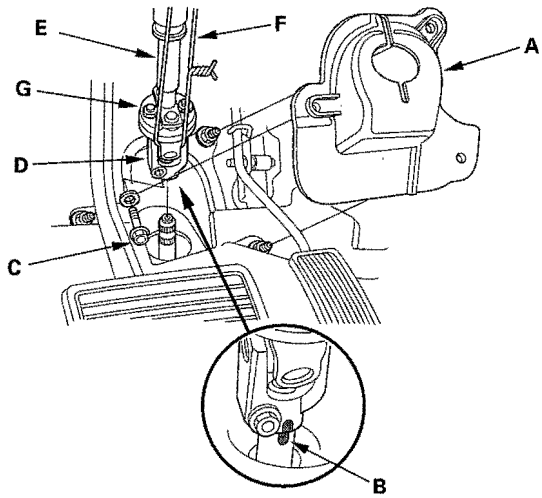

27. Make a reference mark (B) across the steering joint and steering gearbox pinion shaft. Remove the steering joint bolt (C), and disconnect the steering joint (D) by removing the steering joint toward the steering column. Hold the slider shaft (E) on the column with a piece of wire (F) between the joint yoke (G) on the slider shaft to the joint yoke on the upper shaft (see step 8 on page 17-24).

(cont'd)

Protected

Transmission Removal (cont'd)

28. Remove the transmission mount bracket (A) and ground cable (B).

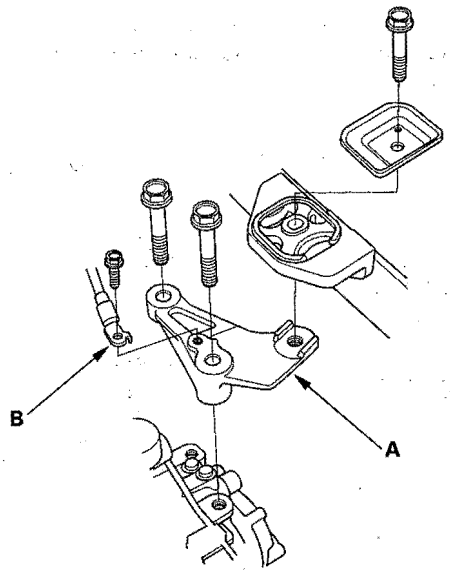

29. Raise the vehicle, and make sure it is securely supported.

30. Remove the under cover.

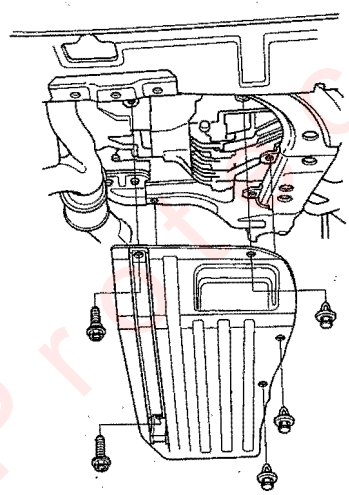

31. Drain the transmission fluid. Install the drain bolt with a new washer (see page 13-10).

32. Remove the splash shield.

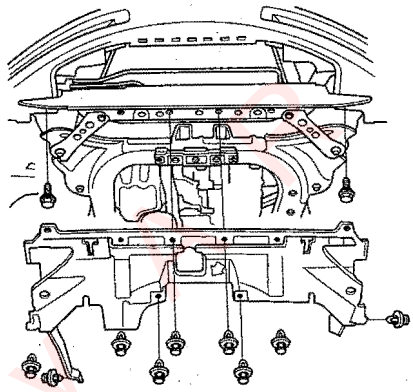

33. Remove the exhaust pipe A.

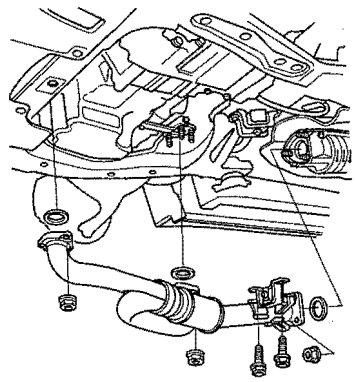

Protected by

34. Separete the front stabilizer link (see step 6 on page 16-4).

35. Remove the damper fork (see step 7 on page 16-5).

36. Separate the knuckle from the lower arm (see step 8 on page 16-5).

37. Separate the tie-rod ball joint (see step 11 on page 17-30).

38. Remove the left and right driveshaft inboard joints (see step 11 on page 16-5).

39. Remove the intermediate shaft (see page 16-21).

40. Remove the rear engine lower mount mounting bolts.

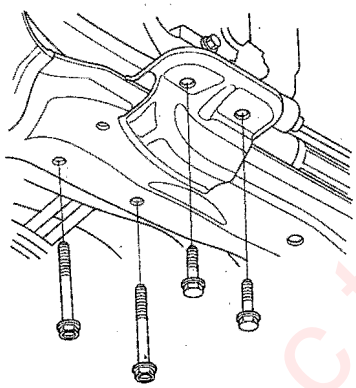

41. Disconnect the power steering pressure switch connector.

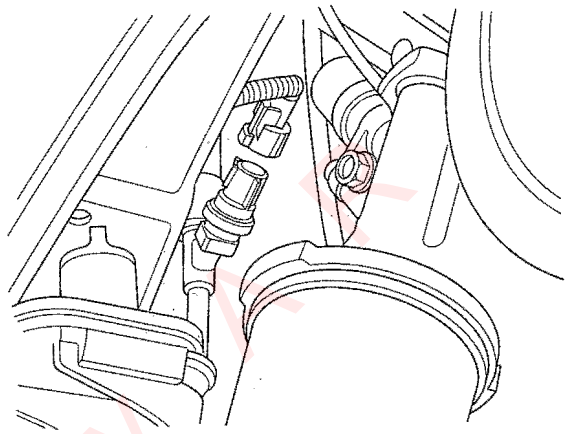

Protected by

(cont'd)

Transmission Removal (cont'd)

42. Remove the transmission lower mount mounting nuts.

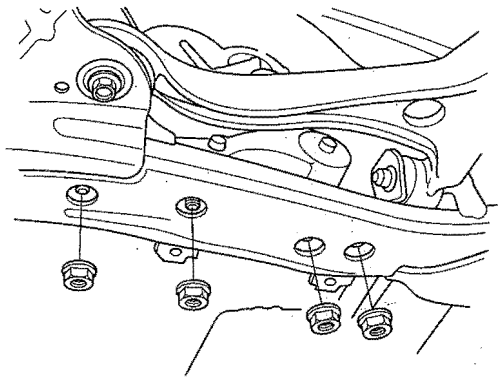

43. Remove the middle subframe mounting bolts.

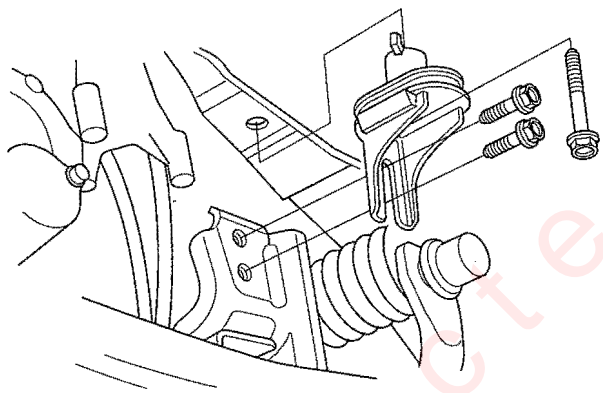

44. Make the appropriate reference lines (A) at both ends of the subframe (B) that line up with the edge (C) of the stiffeners (D).

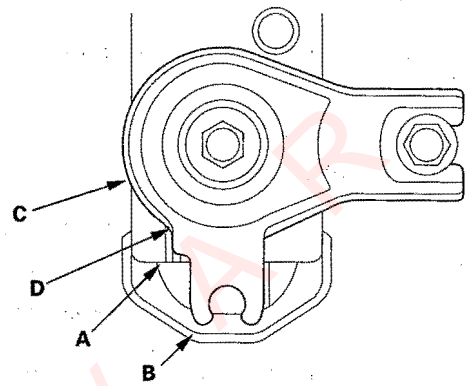

45. Support the subframe with the subframe adapter and a jack.

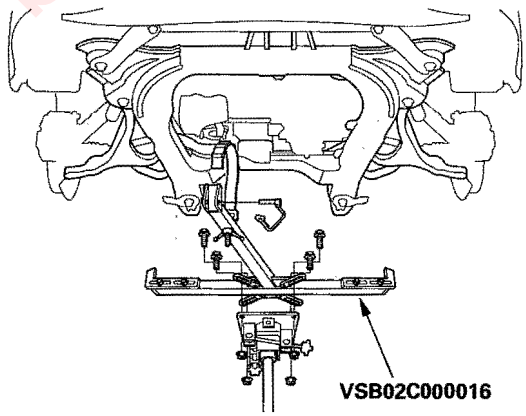

Protected by AR

46. Remove the front suspension subframe stays (A) and front suspension subframe (B).

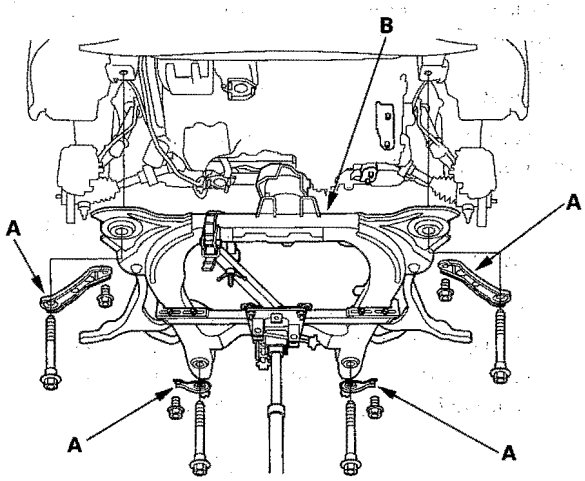

47. Remove the front engine mount upper bracket.

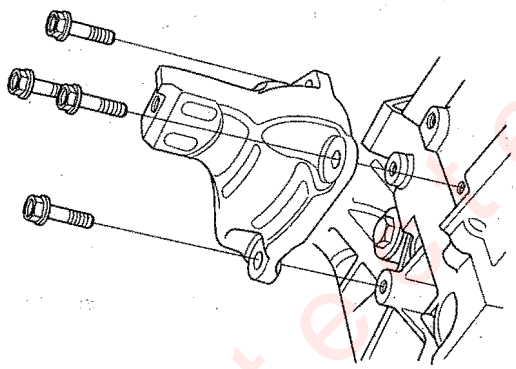

48. Remove the transmission lower front mount (A) and the transmission lower rear mount (B).

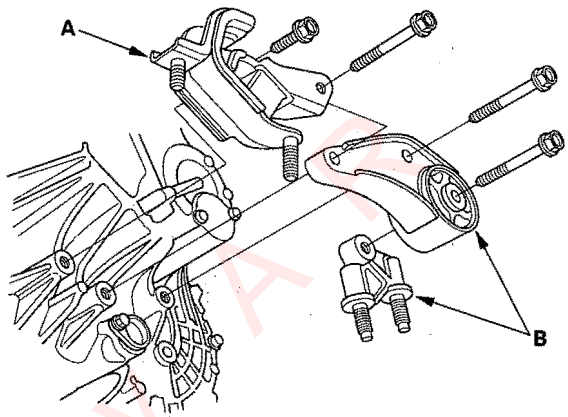

49. Remove the clutch cover.

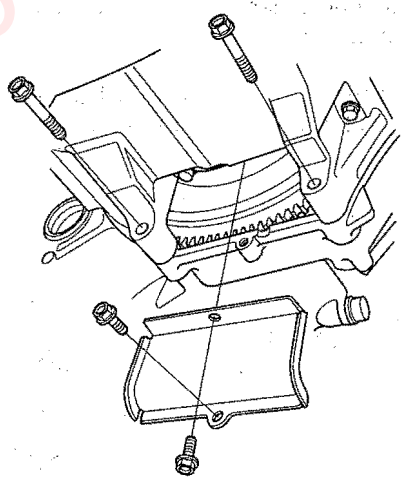

Protected by AIS

(cont'd)

Transmission Removal (cont'd)

50. Place the transmission jack under the transmission, and remove the transmission lower mounting bolts.

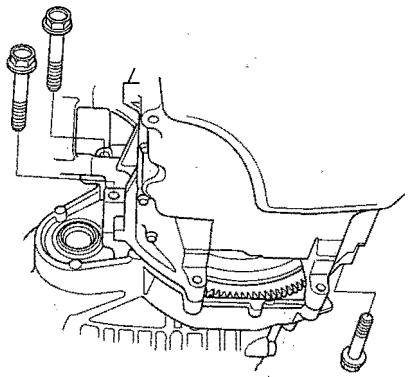

51. Pull the transmission away from the engine until the transmission mainshaft clears the clutch pressure plate, then lower the transmission on the transmission jack.

52. Remove the boot (A), release fork (B), and release bearing (C) from the transmission.

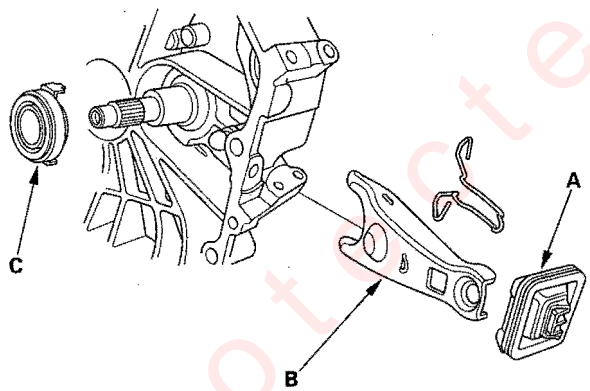

Transmission Installation

Special Tools Required

- Engine support hanger, A and Reds AAR-T-12566 (Available through the Honda Tool and Equipment Program 888-424-6857)
- Engine hanger balance bar VSB02C000019
- Front subframe adapter VSB02C000016

NOTE: Use fender covers to avoid damaging painted surfaces.

1. Check that the two dowel pins are installed in the clutch housing.

2. Apply super high temp urea grease (P/N 08798-9002) to the release fork (A) and the release bearing (B). Install the release fork, the release bearing, and the boot (C).

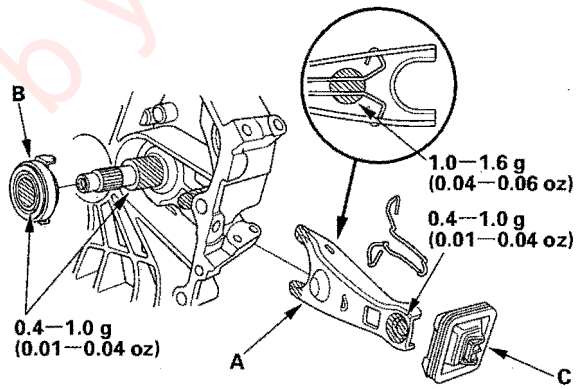

3. Place the transmission on the transmission jack, and raise it to the engine level.

4. Install the transmission lower mounting bolts.

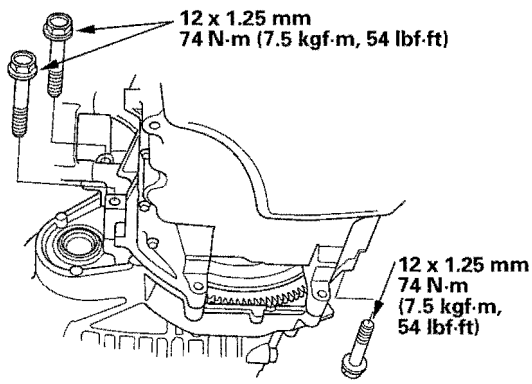

Protected by AR

5. Install the clutch cover.

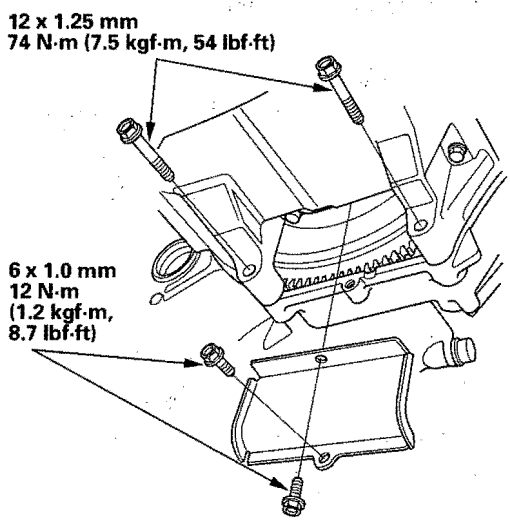

6. Install the front engine mount upper bracket.

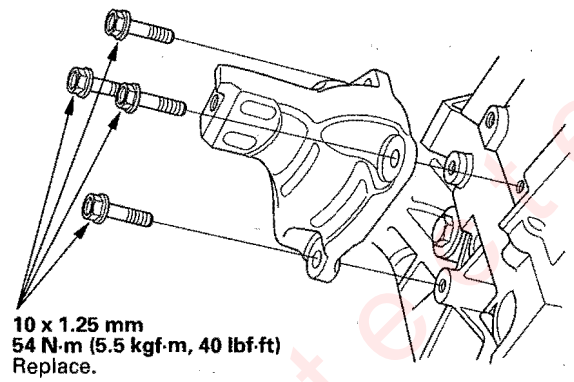

7. Support the subframe with the subframe adapter and a jack.

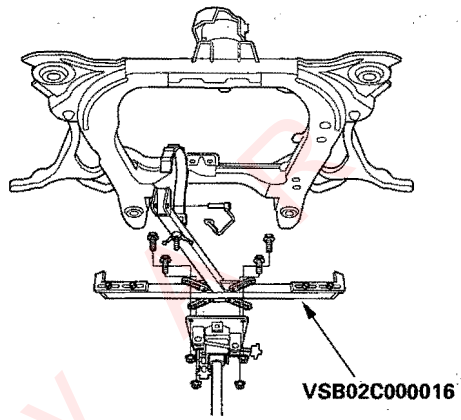

8. Install the front suspension subframe (A) and front suspension subframe stays (B).

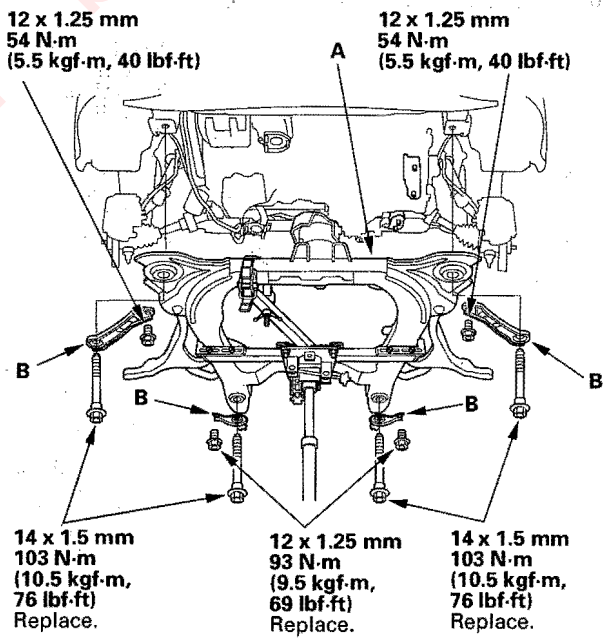

(cont'd)

Protected by

Transmission Installation (cont'd)

9. Align the reference marks (A) with edge (B) of both rear stiffer (C), and tighten the rear subframe mounting bolts, then front bolts, and tighten the stiffener bolts to the specified torque.

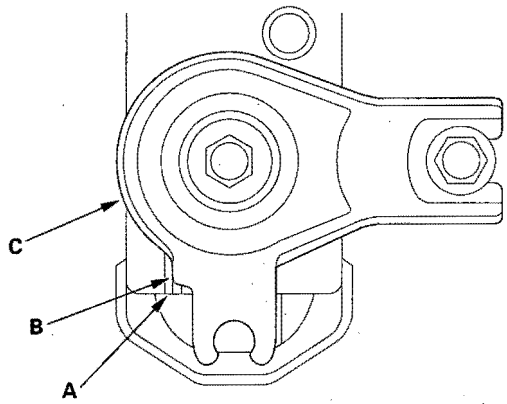

10. Install the middle subframe mounting bolts.

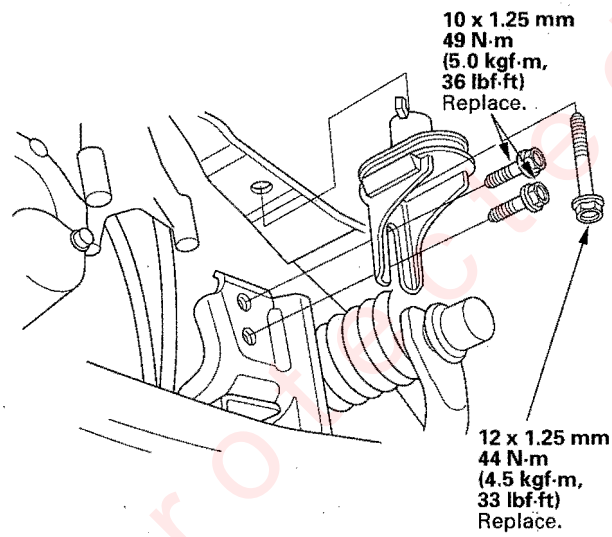

11. Install the transmission lower front mount (A) and the transmission lower rear mount (B).

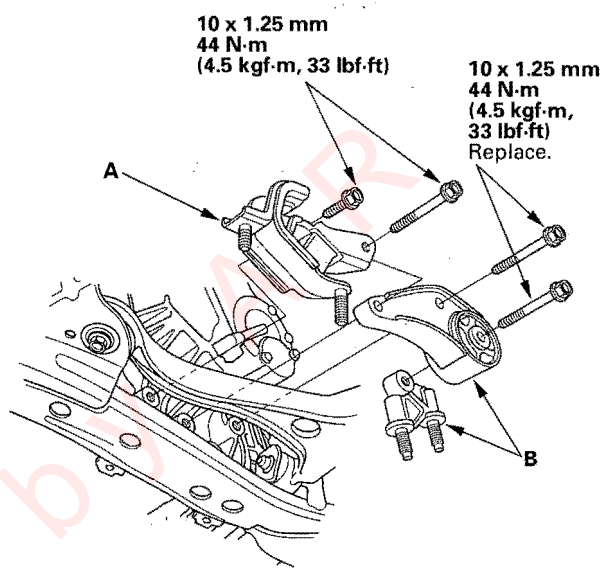

12. Install the transmission lower mount mounting nuts.

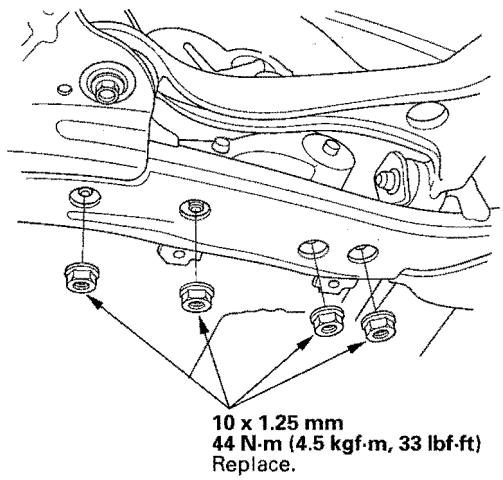

Produced by MOR

13. Install the rear engine lower mount mounting bolts.

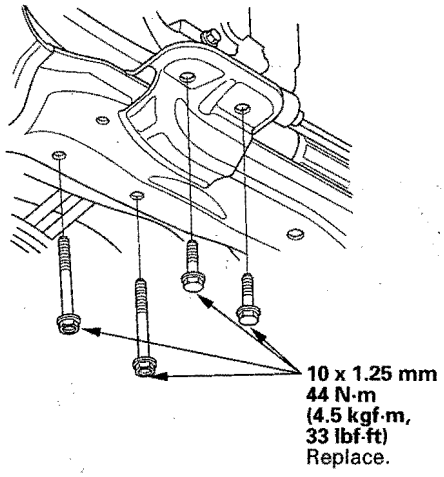

14. Connect the power steering pressure switch connector.

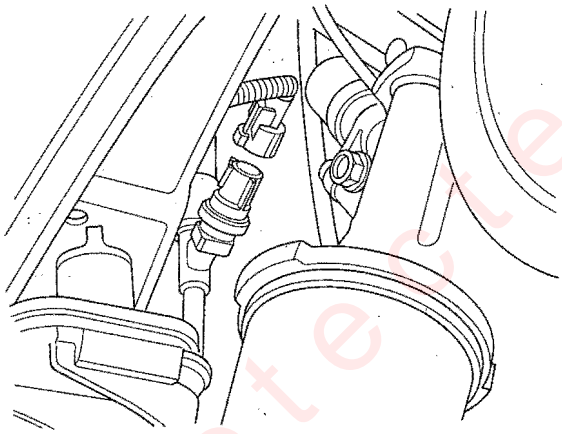

15. Connect the return line to the power steering fluid reservoir.

16. Install the tie-rod ball joint (see step 27 on page 17-56).

17. Install the front wheels, and set them in the straight ahead position.

18. Lower the vehicle.

19. Unlock the steering wheel.

20. Connect the steering joint to the steering gearbox pinion shaft (A) by aligning the reference mark (B), and remove the wire (C) from the joint yoke (D).

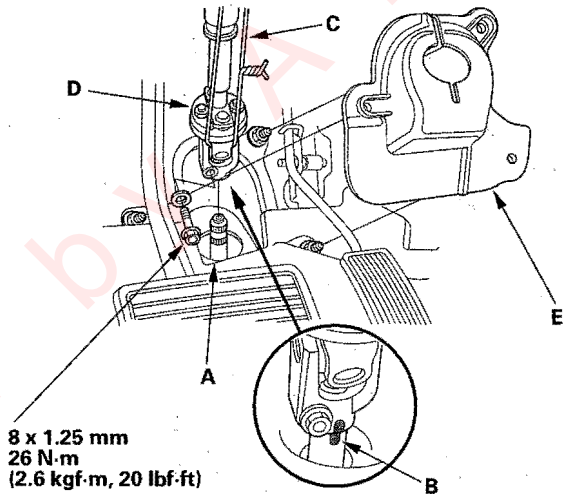

21. Install the steering joint cover (E).

22. Install the intermediate shaft (see page 16-29).

23. Install the left and right driveshaft inboard joints (see page 16-18).

24. Install the knuckle onto the lower arm (see step 5 on page 16-19).

25. Install the damper fork (see step 7 on page 16-19).

26. Connect the front stabilizer (see step 9 on page 16-20).

(cont'd)

Protected by AK

Transmission Installation (cont'd)

27. Install the exhaust pipe A and new gaskets (B).

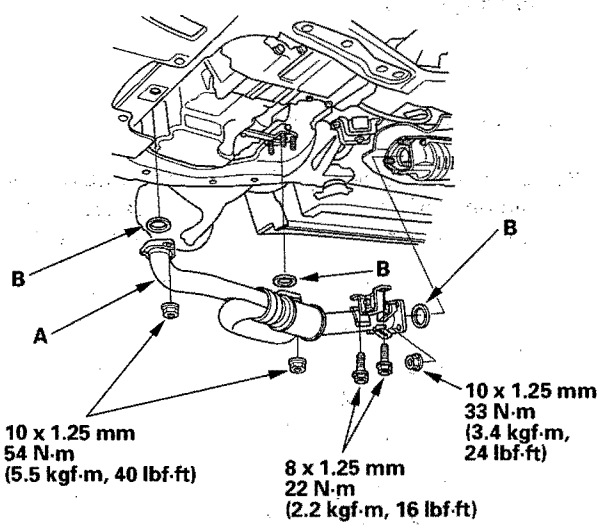

28. Install the splash shield.

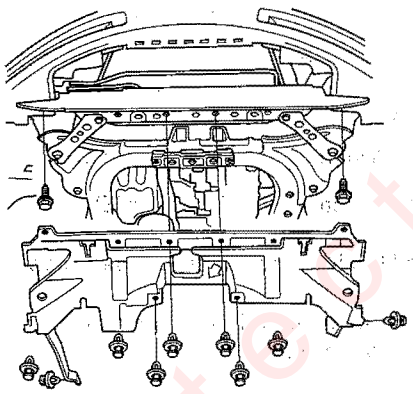

29. Install the under cover.

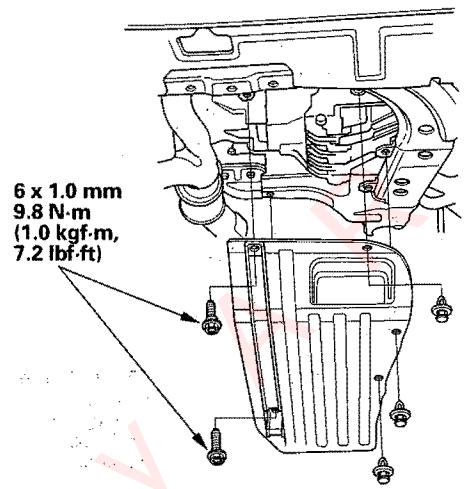

30. Lay the fender cover over the fender, then install the transmission mount bracket (A) and ground cable (B).

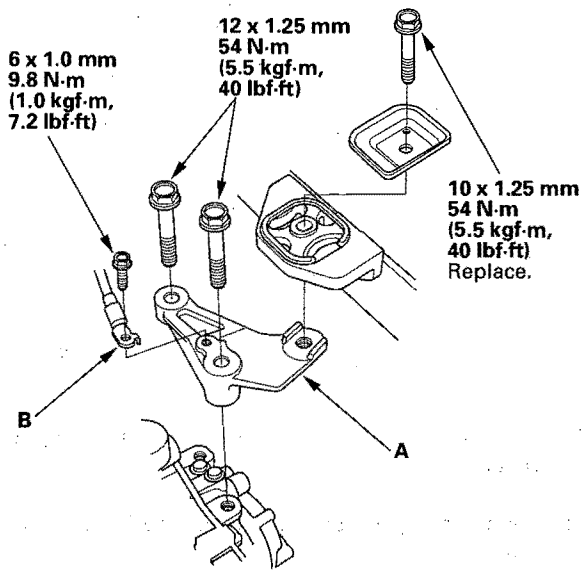

31. Remove the engine hanger and special tool from the engine.

Protected by

32. Install the transmission upper mounting bolts.

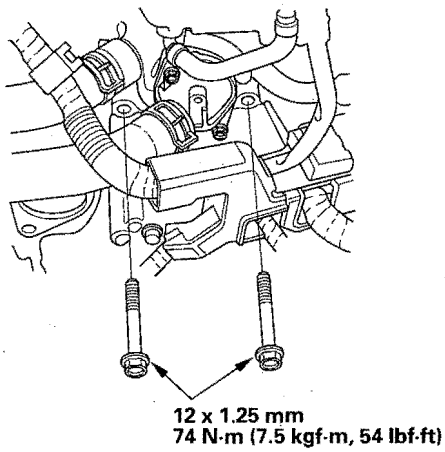

33. Install the engine rear mount stop.

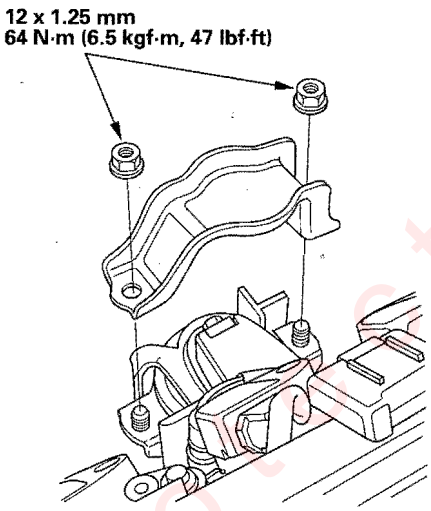

34. Install the engine front mount mounting bolt (A) and the engine front mount stop (B).

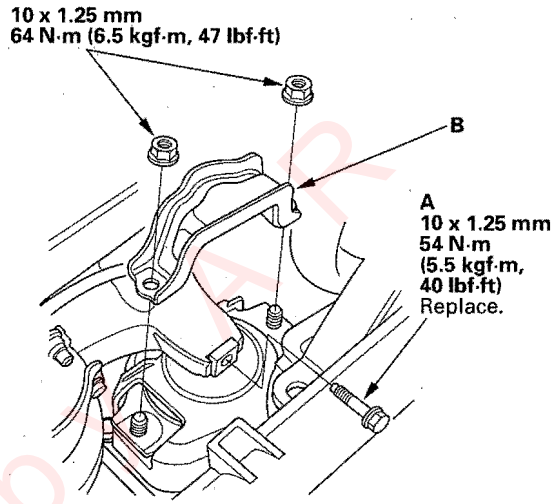

35. Apply super high temp urea grease (P/N 08798-9002) to the end of the cylinder rod. Install the slave cylinder. Be careful not to bend the clutch line.

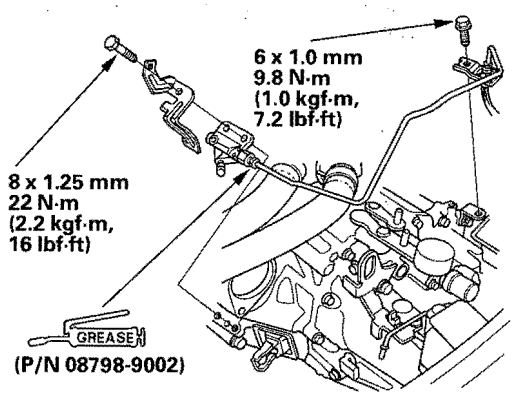

(cont'd)

Protected by AR

Transmission Installation (cont'd)

36. Connect the vacuum hose (A).

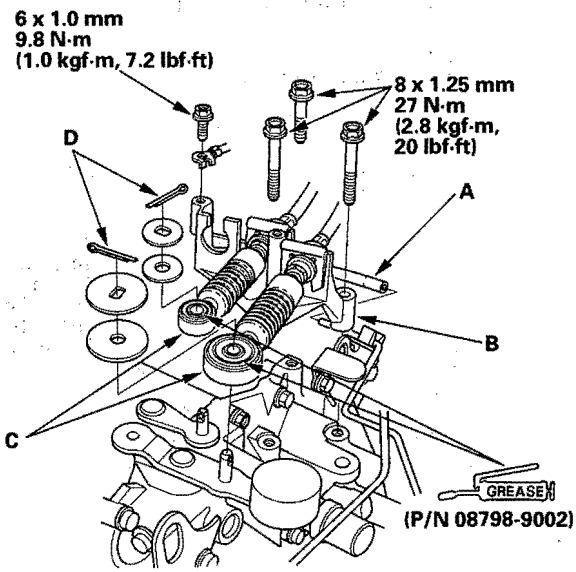

37. Install the cable bracket (B) and cables (C).

38. Apply a light coat of super high temp urea grease (P/N 08798-9002) to the cable ends, and install new cotter pins (C).

39. Install the harness bracket.

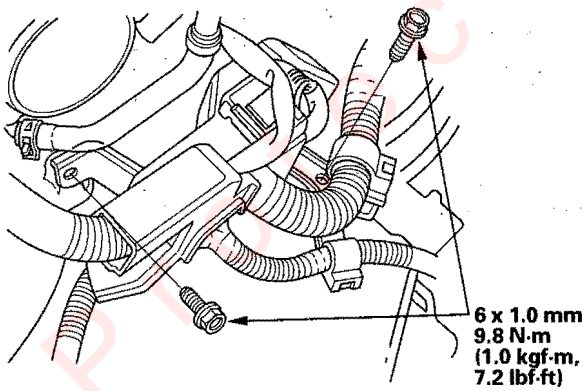

40. Install the starter motor (A), then connect the starter cable (B).

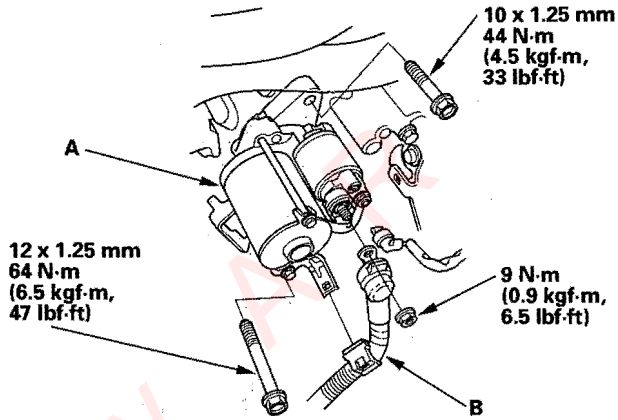

41. Connect the vacuum hose (A), then install the harness clips (B).

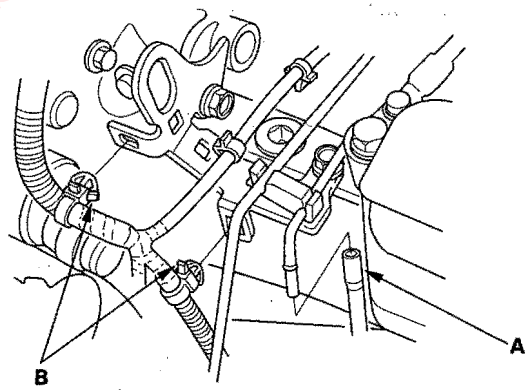

Protected by ARA

42. Connect the input shaft (mainshaft) speed sensor connector (A) and output shaft (countershaft) speed sensor connector (B).

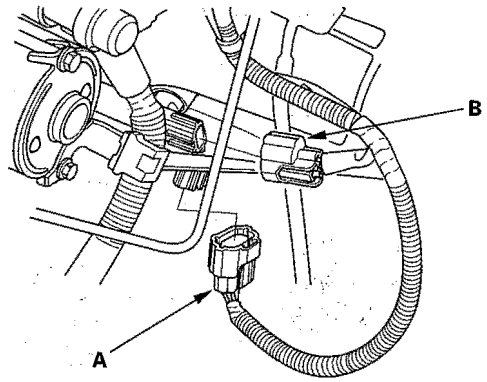

43. Connect the back-up light switch connector (A) and reverse lockout solenoid connector (B), then install the harness clips (C).

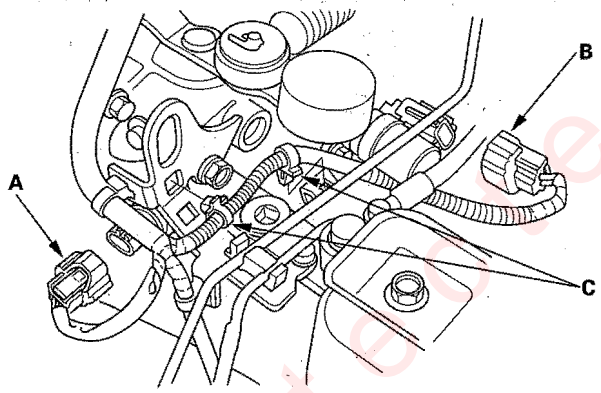

44. Install the power steering pump outlet line (A) with a new O-ring (B) to the pump (C), and install the hose (D) in its clamp (E).

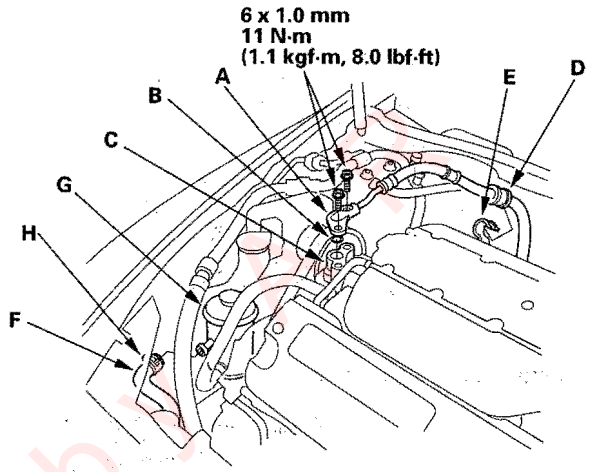

45. Connect the return the hose (F) to the power steering fluid reservoir (G), then secure the hose with its clamp (H).

46. Install the strut bar.

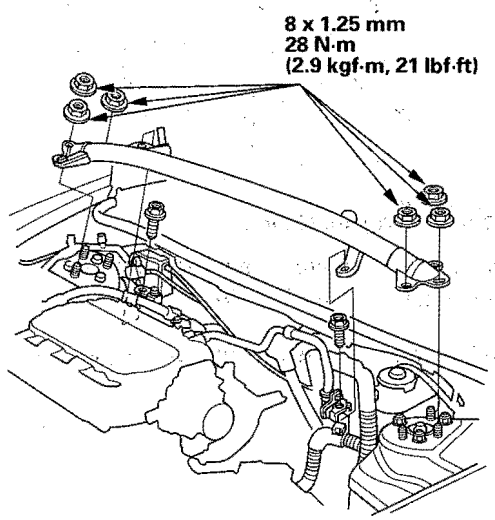

(cont'd)

Protected by

Transmission Installation (cont'd)

47. Install the under-hood fuse/relay box.

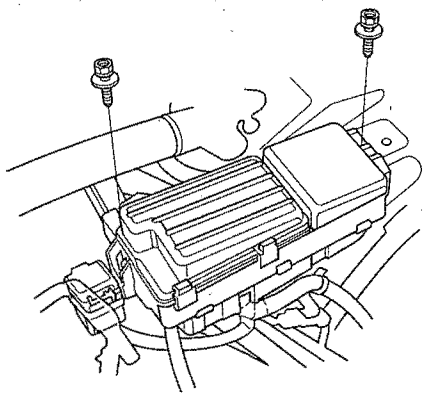

48. Install the battery base.

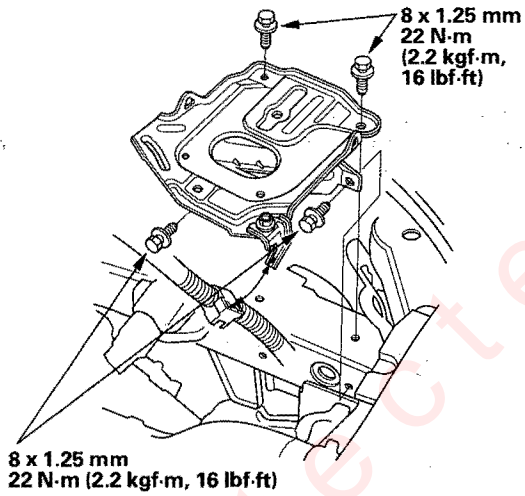

49. Install the resonator chamber and air cleaner housing (see page 11-273).

50. Refill the transmission fluid (see page 13-10).

51. Install the bulkhead cover (A) and the intake manifold cover (B).

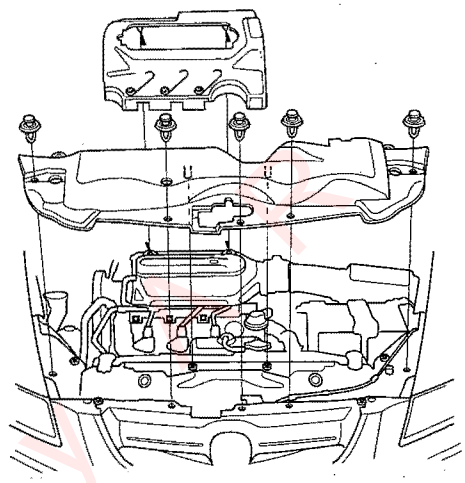

52. Install the right rear engine compartment cover (A) and the right side engine compartment cover (B).

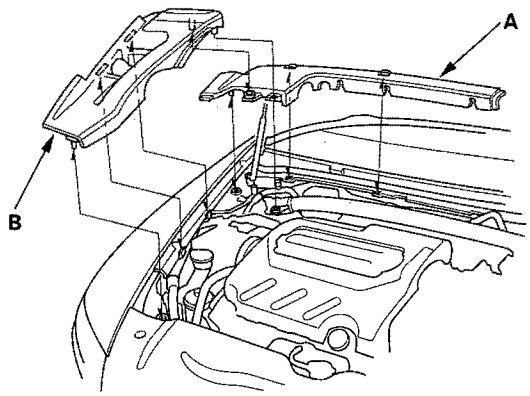

Protected by

53. Install the left side engine compartment cover (A) and the left rear engine compartment cover (B).

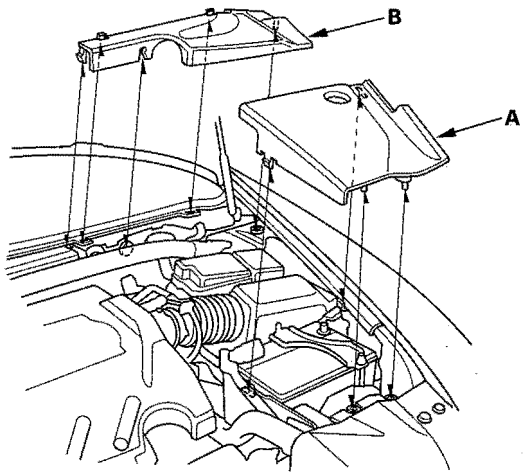

54. Disconnect the right side support strut from the pivot ball (bolted to the hood). Secure the hood (A) in a vertical position. Remove the right side pivot ball and install it into the upper threaded hole (B), then reattach the support struts.

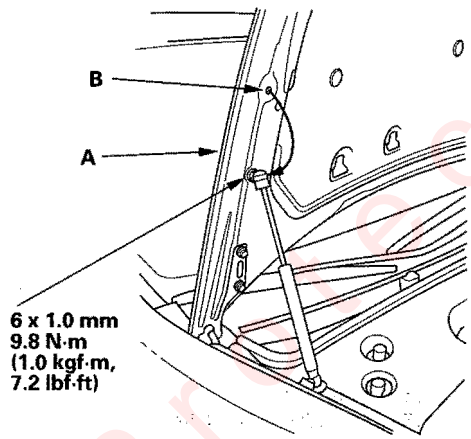

55. Remove the steering wheel (see page 17-21).

56. Center the cable reel by first rotating it clockwise until it steps. Then rotate it counterclockwise (about three full turns) until the arrow mark on the label points straight up.

57. Reinstall the steering wheel (see page 17-23).

58. Fill the power steering fluid reservoir with fluid to the upper level line.

59. Install the battery. Connect the positive (+) cable first, then the negative (−) cable to the battery.

60. Start the engine, and run it at fast idle, then turn the steering wheel from lock-to-lock several times to bleed air from the system.

61. Recheck the fluid level, and refill if necessary.

62. Check the front wheel alignment (see page 18-5).

63. Check the steering wheel spoke angle. If the steering spoke angles to the right and left are not equal (steering wheel and rack are not centered), correct the engagement of the joint/pinion shaft serrations, then adjust the front toe by turning the tie-rod ends if necessary. If you need to correct the engagement of the joint/pinion shaft, repeat steps 60 through 62.

64. Test drive the vehicle.

65. Check the clutch operation.

66. Enter the anti-theft codes for the radio and navigation system, then enter the customer's XM radio channel presets, and set the clock.

Protected by

Transmission Disassembly

Exploded View - Clutch Housing

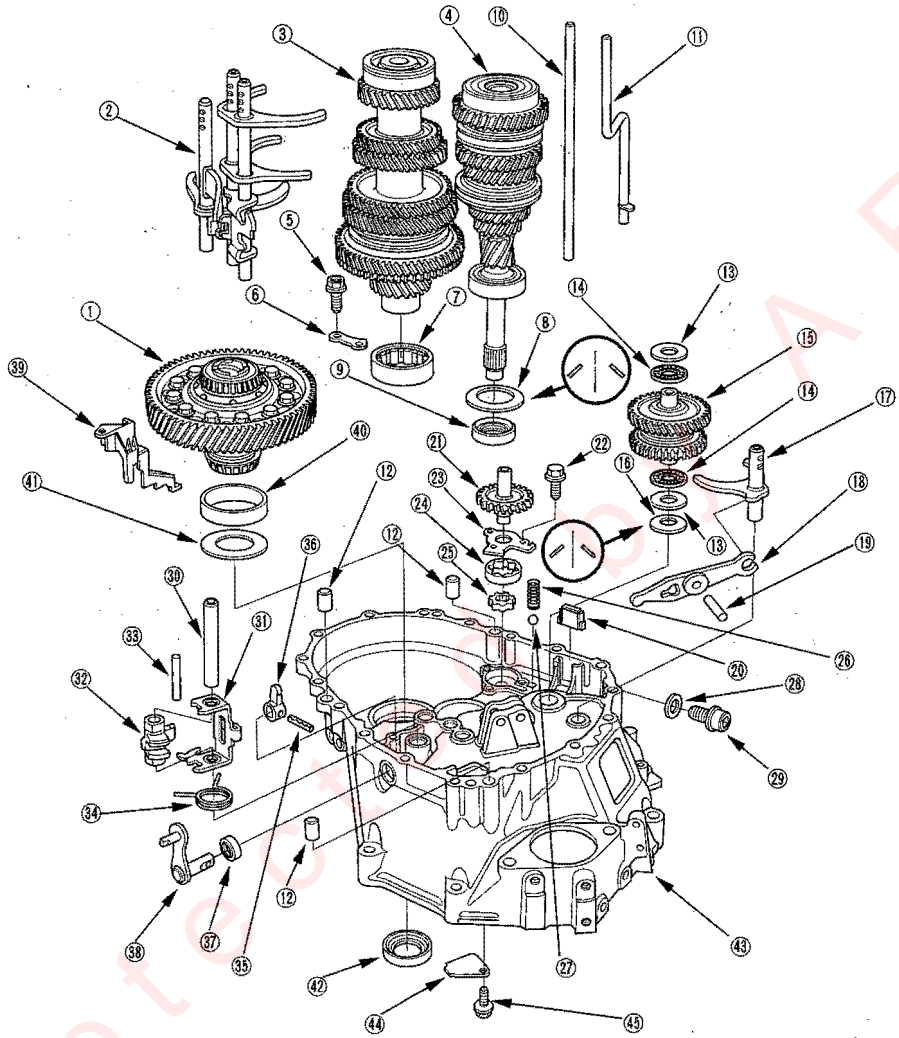

① DIFFERENTIAL ASSEMBLY
② SHIFT FORK ASSEMBLY
③ COUNTERSHAFT ASSEMBLY
④ MAINSHAFT ASSEMBLY
⑤ 6 mm FLANGE BOLT
12 N·m (1.2 kgf·m, 8.7 lbf·ft)
⑥ BEARING SET PLATE
⑦ NEEDLE BEARING
⑧ 64 mm SPRING WASHER
⑨ 28 x 43 x 7 mm OIL SEAL
Replace.
⑩ OIL GUIDE PIPE A
⑪ OIL GUIDE PIPE
⑫ 14 x 20 mm DOWEL PIN
⑬ 20 mm THRUST WASHER
⑭ 20 mm THRUST NEEDLE BEARING
⑮ REVERSE IDLER GEAR SHAFT ASSEMBLY
⑯ 33 mm SPRING WASHER
⑰ REVERSE SHIFT FORK
⑱ REVERSE SHIFT LEVER
⑲ 8 x 50 mm PIN
⑳ MAGNET
㉑ OIL PUMP SHAFT
㉒ 6 mm FLANGE BOLT
12 N·m (1.2 kgf·m, 8.7 lbf·ft)
㉓ OIL PUMP PLATE
㉔ OIL PUMP OUTER ROTOR
㉕ OIL PUMP INNER ROTOR
㉖ RELIEF VALVE SPRING
㉗ STEEL BALL
㉘ 14 mm WASHER
Replace.
㉙ DRAIN PLUG
39 N·m (4.0 kgf·m, 29 lbf·ft)
㉚ SHIFT PIECE SHAFT
㉛ INTERLOCK
㉜ SHIFT PIECE
㉝ 8 x 50 mm PIN
㉞ SELECT RETURN SPRING
㉟ 5 x 22 mm, 3 x 22 mm SPRING PIN
Replace.
㊱ SELECT ARM
㊲ 14 x 20 x 5 mm DUST SEAL
Replace.
㊳ SELECT LEVER
㊴ OIL GUTTER PLATE
㊵ 45 x 80 x 21 mm BEARING OUTER RACE
㊶ 46 x 80 x 1 mm SPACER
㊷ 35 x 54 x 8 mm OIL SEAL
Replace.
㊸ CLUTCH HOUSING
㊹ BREATHER PLATE
㊺ 6 mm FLANGE BOLT
12 N·m (1.2kgf·m, 8.7 lbf·ft)

Exploded View - Transmission Housing

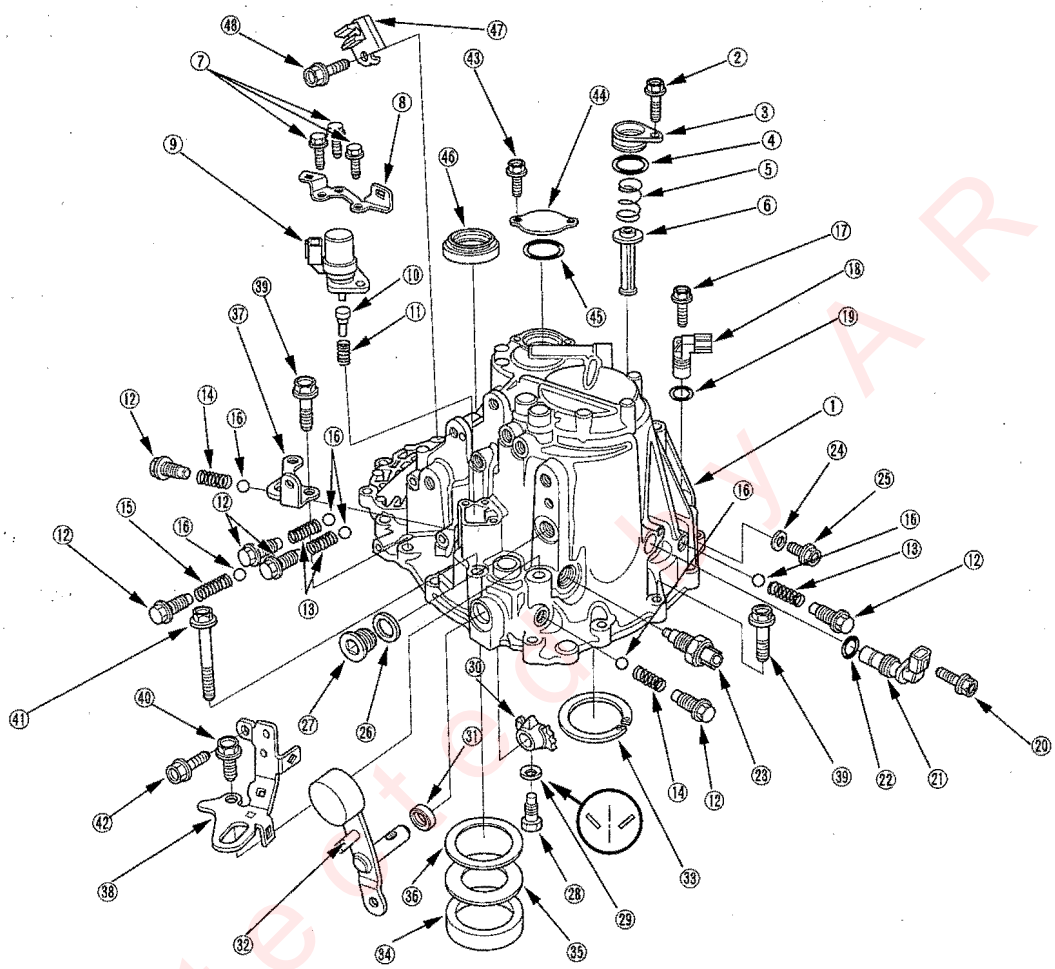

① TRANSMISSION HOUSING
② 6 mm FLANGE BOLT
12 N·m (1.2kgf·m, 8.7 lbf·ft)
③ STRAINER COVER
④ O-RING
Replace.
⑤ STRAINER SET SPRING
⑥ OIL PUMP STRAINER
⑦ 6 mm FLANGE BOLT
12 N·m (1.2 kgf·m, 8.7 lbf·ft)
⑧ TRANSMISSION HARNESS STAY
⑨ REVERSE LOCKOUT SOLENOID
⑩ SELECT LOCK PIN
⑪ SELECT LOCK SPRING
⑫ SET SCREW
22 N·m (2.2 kgf·m, 16 lbf·ft)
⑬ 27.4 mm SPRING (3)
⑭ 22.0 mm SPRING (2)
⑮ 26.1 mm SPRING (1)
⑯ STEEL BALL
⑰ 6 mm FLANGE BOLT
12 N·m (1.2 kgf·m, 8.7 lbf·ft)
⑱ INPUT SHAFT
(MAINSHAFT) SPEED SENSOR
⑲ O-RING
Replace.
⑳ 6 mm FLANGE BOLT
12 N·m (1.2 kgf·m, 8.7 lbf·ft)
㉑ OUTPUT SHAFT
(COUNTERSHAFT) SPEED SENSOR
㉒ O-RING
Replace.
㉓ BACK-UP LIGHT SWITCH
29 N·m (3.0 kgf·m, 22 lbf·ft)
㉔ 6 mm WASHER
Replace.
㉕ OIL CHECK BOLT
12 N·m (1.2 kgf·m, 8.7 lbf·ft)
㉖ 20 mm WASHER
Replace.
㉗ FILLER PLUG
44 N·m (4.5 kgf·m, 33 lbf·ft)
㉘ 8 mm SPECIAL BOLT
29 N·m (3.0 kgf·m, 22 lbf·ft)
㉙ 8 mm SPRING WASHER
㉚ SHIFT ARM
㉛ DUST SEAL
Replace.
㉜ CHANGE LEVER
㉝ 82 mm SHIM
㉞ 45 x 81 x 18 mm BEARING OUTER RACE
㉟ 46 x 81 x 1 mm SPACER
㊱ 81 mm SHIM
㊲ TRANSMISSION HANGER B
㊳ TRANSMISSION HANGER A
㊴ 10 x 42 mm FLANGE BOLT
44 N·m (4.5 kgf·m, 33 lbf·ft)
㊵ 10 x 20 mm FLANGE BOLT
44 N·m (4.5 kgf·m, 33 lbf·ft)
㊶ 10 x 90 mm FLANGE BOLT
44 N·m (4.5 kgf·m, 33 lbf·ft)
㊷ 8 mm FLANGE BOLT
27 N·m (2.8 kgf·m, 20 lbf·ft)
㊸ 6 mm FLANGE BOLT
12 N·m (1.2 kgf·m, 8.7 lbf·ft)
㊹ TRANSMISSION CASE CAP
㊺ O-RING
Replace.
㊻ 40 x 56 x 9 mm OIL SEAL
Replace.
㊼ CLUTCH PIPE BRACKET
㊽ 8 mm FLANGE BOLT
27 N·m (2.8 kgf·m, 20 lbf·ft)

(cont'd)

Transmission Disassembly (cont'd)

NOTE: Place the clutch housing on two pieces of wood thick enough to keep the mainshaft from hitting the workbench.

1. Remove the strainer cover (A), O-ring (B), strainer set spring (C), and oil pump strainer (D).

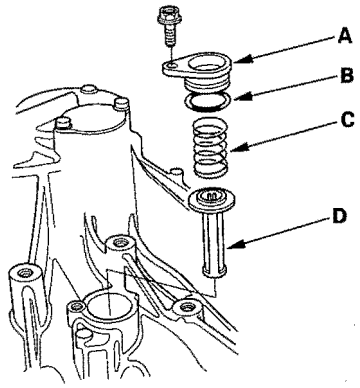

2. Remove the transmission harness stay (A), reverse lockout solenoid (B), and back-up light switch (C).

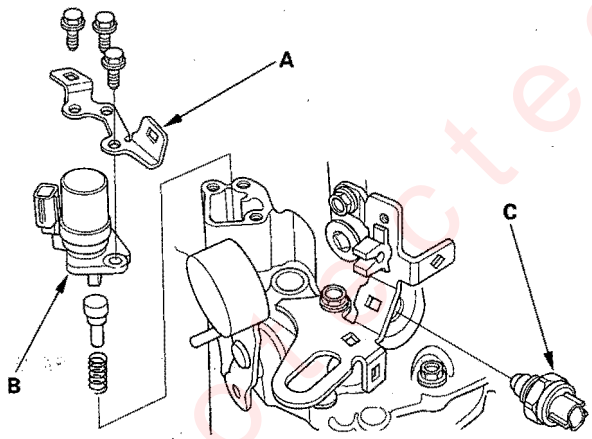

3. Remove the set screws (A), 22.0 mm spring (B), 26.1 mm spring (C), 27.4 mm springs (D), steel balls (E), oil filler plug (F), washer (G), and clutch pipe bracket (H).

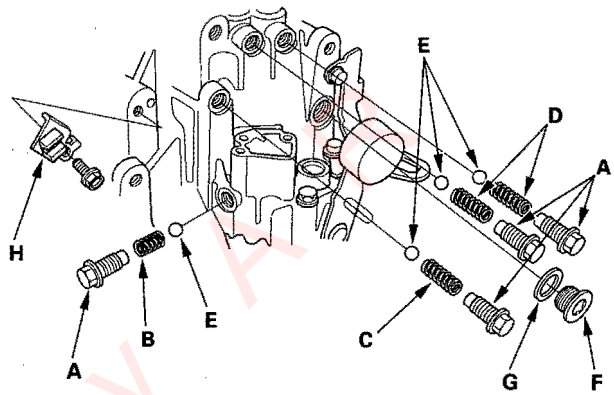

4. Remove the set screws (A), 22.0 mm spring (B), 27.4 mm spring (C), steel balls (D), input shaft (mainshaft) speed sensor (E), output shaft (countershaft) speed sensor (F), and O-rings (G).

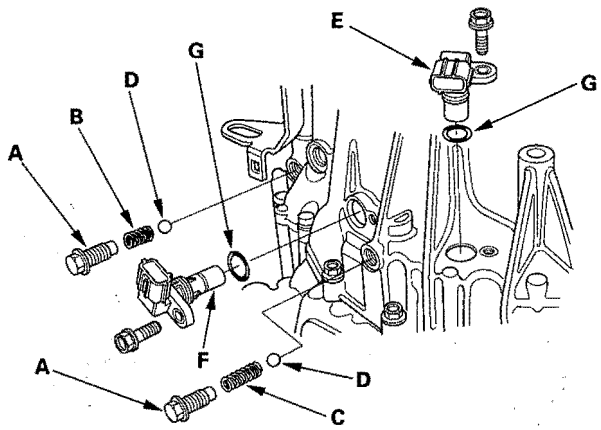

Protected by AP

5. Remove the oil check bolt (A), 6 mm washer (B), drain plug (C), and 14 mm washer (D).

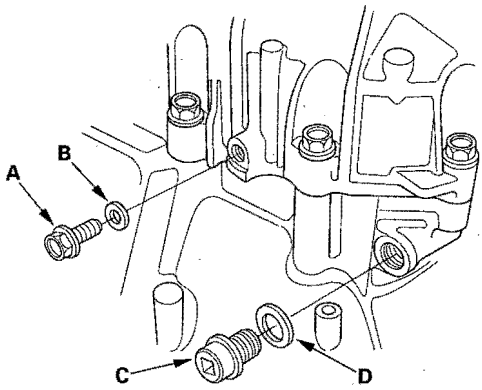

6. Remove the transmission hanger (A), transmission hanger (B), and 8 mm flange bolt (C). Remove the 10 mm flange bolts in a crisscross pattern in several steps.

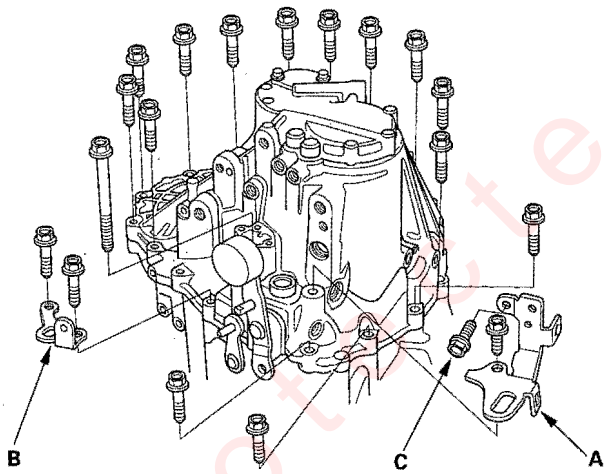

7. Remove the transmission case cap (A) and 37.7 mm O-ring (B).

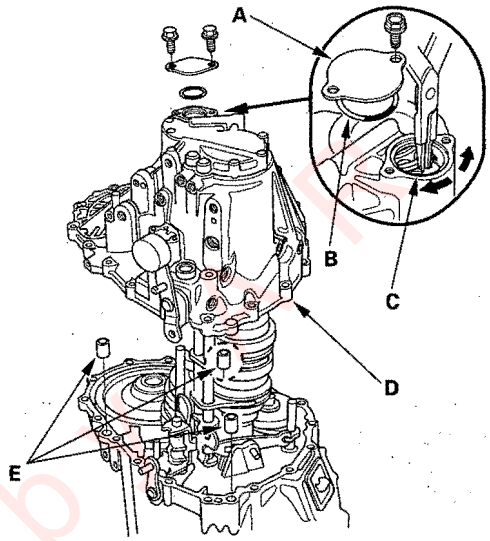

8. Expand the 75 mm snap ring (C) on the countershaft ball bearing, and remove it from the groove with snap ring pliers.

9. Remove the transmission housing (D) and 14 x 20 mm dowel pins (E).

10. Remove the oil guide pipe A, oil guide pipe (B), and magnet (C).

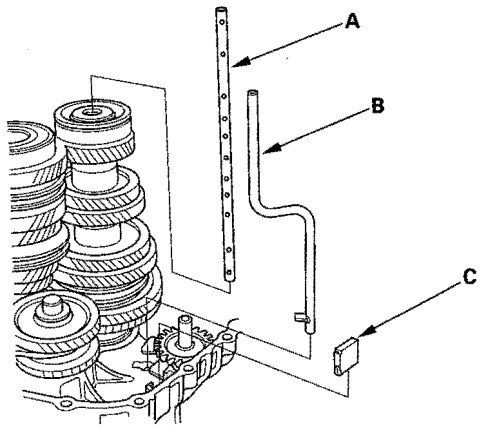

(cont'd)

Protected by

Transmission Disassembly (cont'd)

11. Remove the pin (A) and reverse shift lever (B).

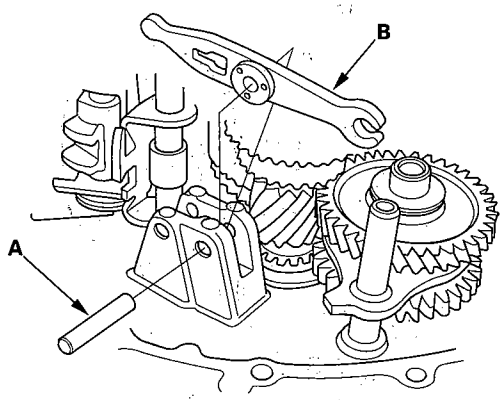

12. Remove the 20 mm thrust washers (A), 20 mm thrust needle bearings (B), reverse idler gear shaft assembly (C), 33 mm spring washer (D), and reverse shift fork (E) as an assembly.

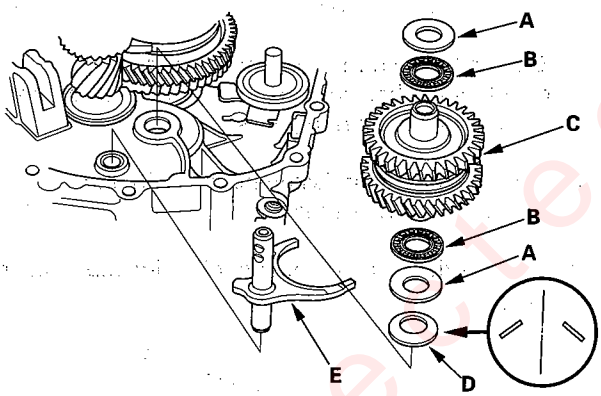

13. Remove the pin (A), select return spring (B), shift piece shaft (C), shift piece (D) and interlock (E).

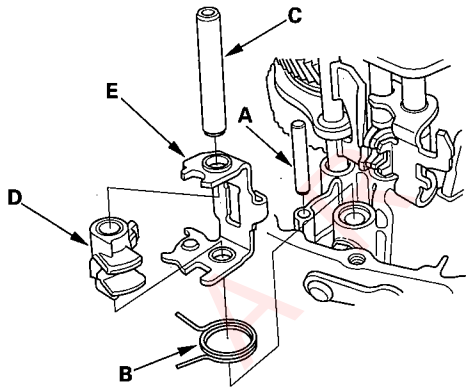

14. Remove the 5 mm spring pin, 3 mm spring pin (A), select arm (B), 14 x 20 x 5 mm dust seal (C), and select lever (D).

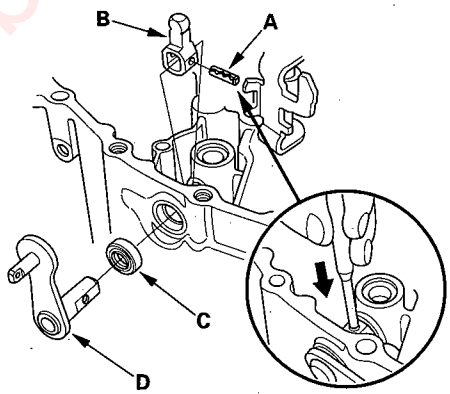

Protected by AR

15. Apply tape to the mainshaft splines to protect the seal, then remove the mainshaft assembly (A) and countershaft assembly (B) with the shift forks (C) from the clutch housing (D).

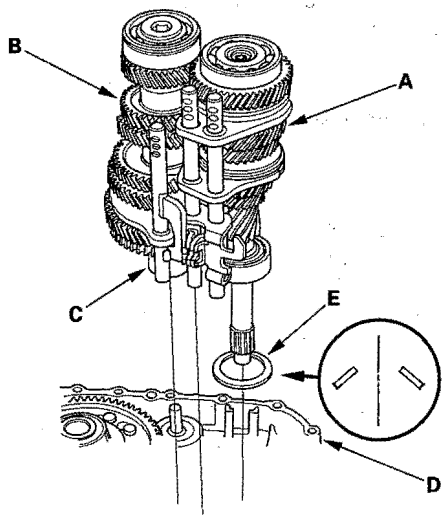

16. Remove the 64 mm spring washer (E).

17. Remove the oil pump shaft (A) and differential assembly (B).

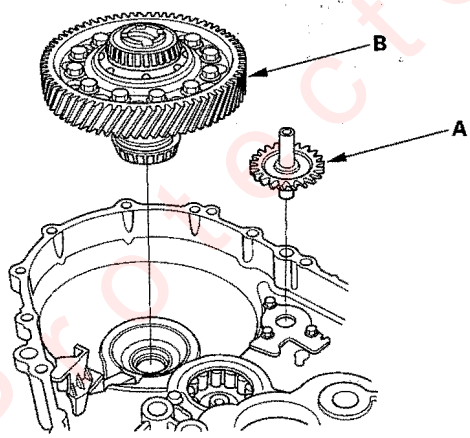

18. Remove the oil pump plate (A), oil pump inner rotor (B), oil pump outer rotor (C), relief valve spring (D), and steel ball (E).

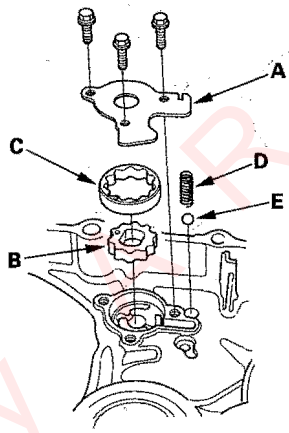

19. Remove the 82 mm shim (A) from the transmission housing (B).

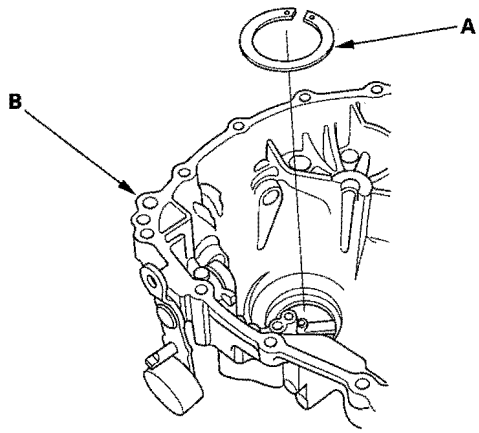

(cont'd)

Protected by

Transmission Disassembly (cont'd)

20. Remove the 8 mm special bolt (A), 8 mm spring washer (B), shift arm (C), change lever (D), and 16 x 23 x 5 mm dust seal (E).

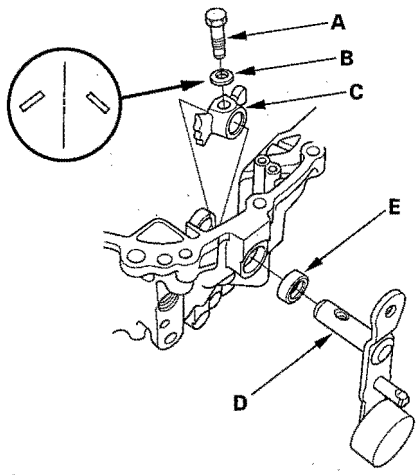

Reverse Shift Lever Clearance Inspection

1. Measure the clearance between the reverse shift lever (A) and reverse shift fork (B) with a feeler gauge (C). If the clearance is more than the service limit, go to step 2.

Standard: **0.05—0.50 mm (0.002—0.020 in.)**
Service Limit: **0.6 mm (0.024 in.)**

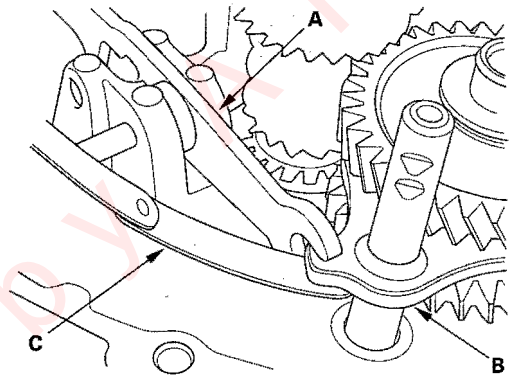

2. Measure the width of the reverse shift lever.

- If the width is not within the standard, replace the reverse shift lever.
- If the width is within the standard, replace the reverse shift fork.

Standard: 6.400—6.650 mm (0.2520—0.2618 in.)

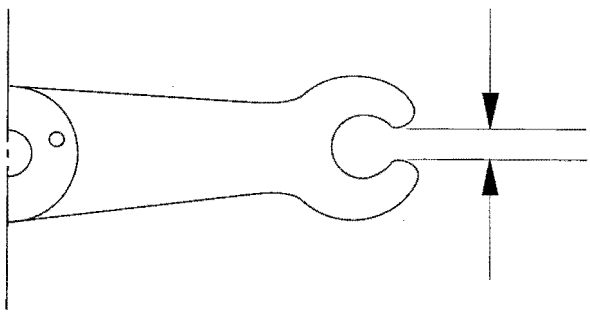

Protected by KAR

3. Measure the clearance between the reverse shift lever (A) and reverse shift piece (B) with a feeler gauge (C). If the clearance is more than the service limit, go to step 4.

Standard: 0–0.4 mm (0–0.015 in.)
Service Limit: 0.5 mm (0.020 in.)

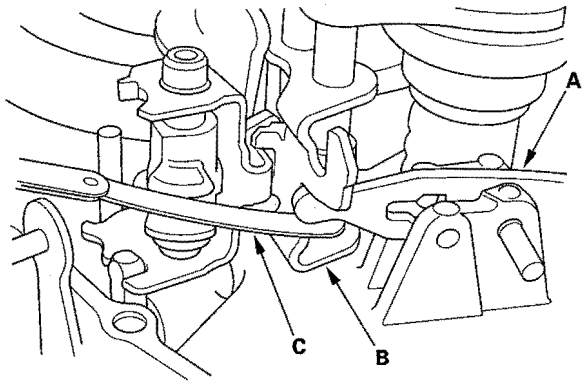

4. Measure the width of the reverse shift lever.

- If the width is not within the standard, replace the reverse shift lever.
- If the width is within the standard, replace the reverse shift piece.

Standard: 13.0–13.2 mm (0.51–0.52 in.)

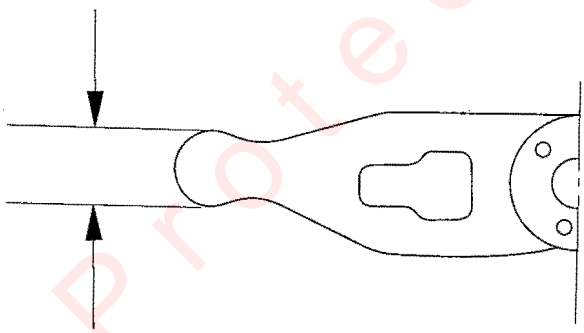

Select Arm Clearance Inspection

1. Measure the clearance between the select arm (A) and interlock (B) with a feeler gauge (C). If the clearance is more than the service limit, go to step 2.

Standard: 0.05–0.25 mm (0.002–0.010 in.)
Service Limit: 0.5 mm (0.020 in.)

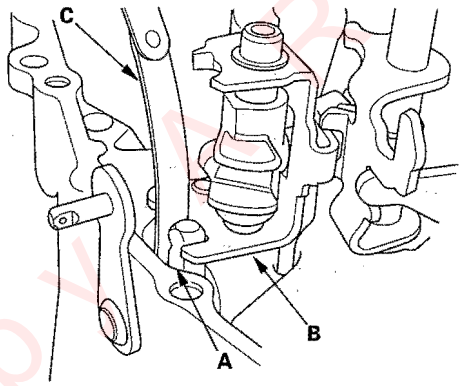

2. Measure the width of the select arm.

- If the width is not within the standard, replace the select arm.
- If the width is within the standard, replace the interlock.

Standard: 12.9–13.0 mm (0.50–0.51 in.)

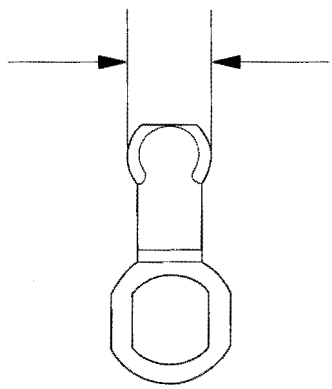

Protected by ARR

Shift Arm Clearance Inspection

1. Measure the clearance between the shift arm (A) and shift piece (B) with a feeler gauge (C). If the clearance is more than the service limit, go to step 2.

Standard: 0.05—0.25 mm (0.002—0.010 in.)
Service Limit: 0.5 mm (0.020 in.)

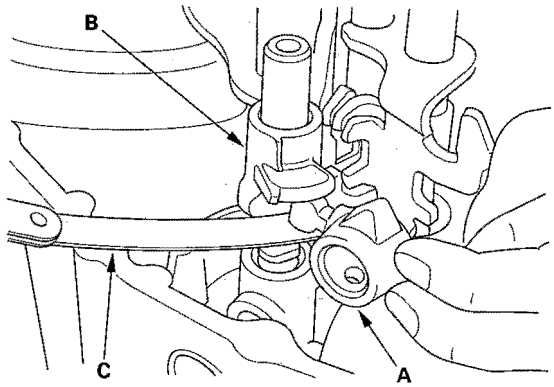

2. Measure the width of the shift arm.

- If the width is not within the standard, replace the shift arm.
- If the width is within the standard, replace the shift piece.

Standard: 13.9—14.0 mm (0.54—0.55 in.)

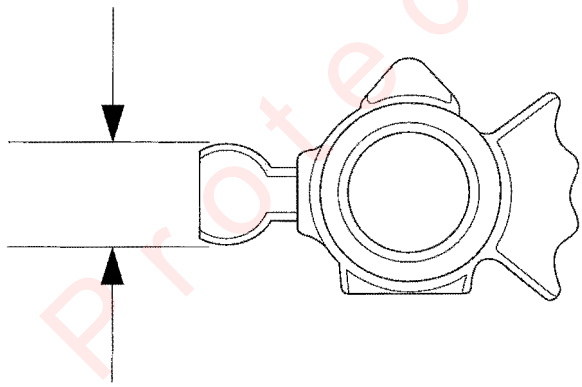

Oil Pump Clearance Inspection

1. Measure the thrust clearance between the oil pump gears (A) and clutch housing (B) with a straight edge (C) and a feeler gauge (D).

Standard (new) : 0.03—0.13 mm (0.001—0.005 in.)
Service Limit: 0.15 mm (0.006 in.)

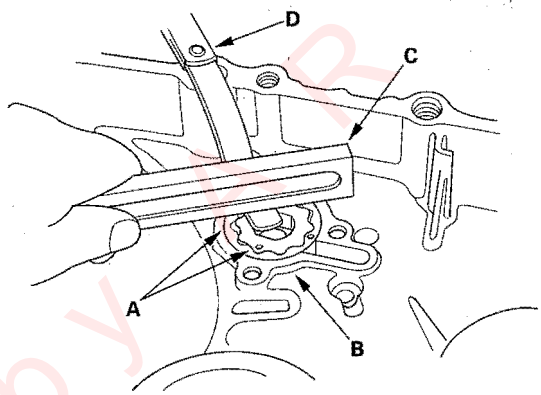

2. Measure the side clearance between the outer rotor (A) and clutch housing (B) with a feeler gauge (C).

Standard (new) : 0.1—0.2 mm (0.004—0.008 in.)
Service Limit: 0.22 mm (0.009 in.)

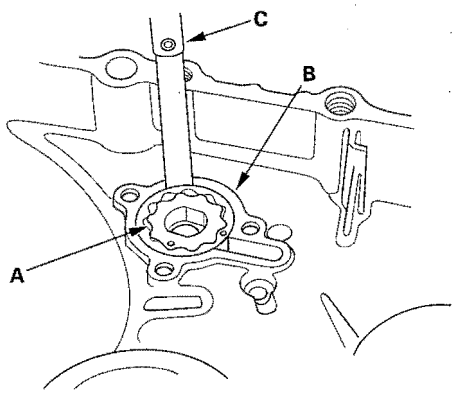

Protected by HR

3. Measure the side clearance between the outer rotor (A) and inner rotor (B) with a feeler gauge (C).

Standard (new) : below 0.14 mm (0.006 in.)
Service Limit: 0.2 mm (0.008 in.)

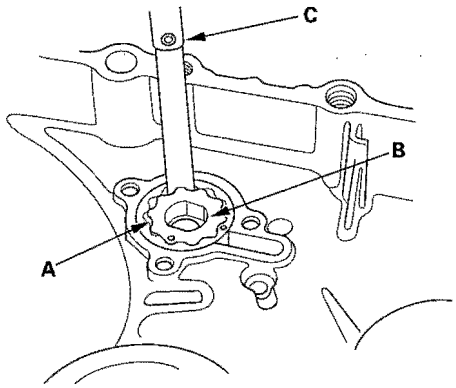

4. If clearance is not within the standard, replace the oil pump outer and inner rotors.

Shift Fork Clearance Inspection

NOTE: The synchro sleeve and synchro hub should be replaced as a set.

1. Measure the clearance between each shift fork (A) and its matching synchro sleeve (B). If the clearance exceeds the service limit, go to step 2.

Standard: 0.35 – 0.65 mm (0.014 – 0.026 in.)
Service Limit: 1.0 mm (0.039 in.)

1ST/2ND, 3RD/4TH, 5TH/6TH:

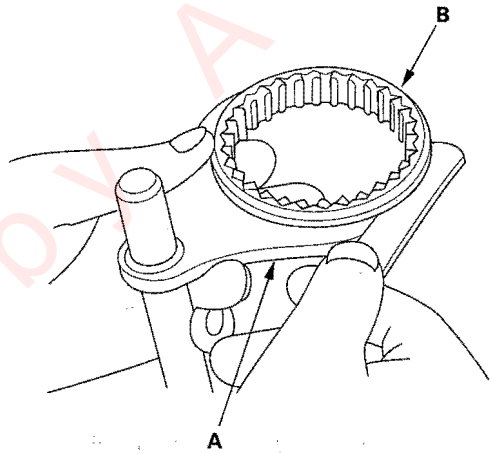

REVERSE:

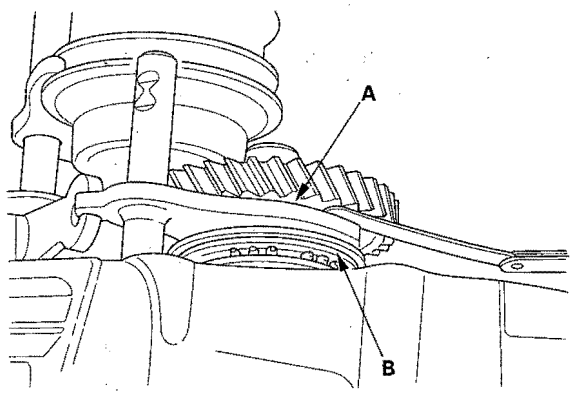

(cont'd)

Protected by AR

Shift Fork Clearance Inspection (cont'd)

2. Measure the thickness of the shift fork fingers.

   - If the thickness is not within the standard, replace the shift fork.
   - If the thickness is within the standard, replace the synchro sleeve.

Standard:
1st/2nd, 3rd/4th, 5th/6th: 7.4—7.6 mm (0.29—0.30 in.)
Reverse: 6.2—6.4 mm (0.24—0.25 in.)

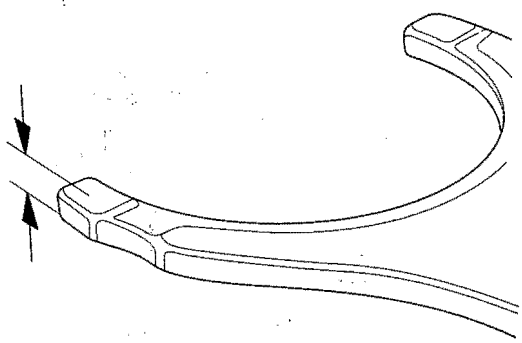

3. Measure the clearance between the shift fork (A) and shift piece (B). If the clearance exceeds the service limit, go to step 4.

Standard: 0.2—0.6 mm (0.008—0.024 in.)
Service Limit: 0.7 mm (0.028 in.)

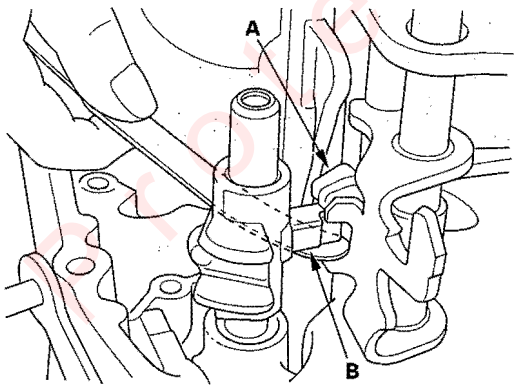

4. Measure the width of the shift piece.

   - If the width is not within the standard, replace the shift piece.
   - If the width is within the standard, replace the shift fork.

Standard: 12.8—13.0 mm (0.50—0.51 in.)

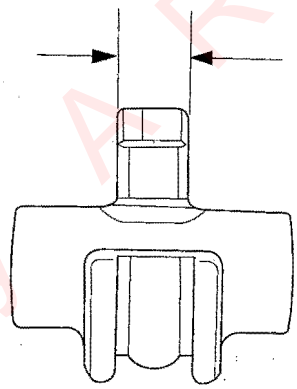

Protected by AR

Shift Fork Disassembly/Reassembly

Prior to reassembling, clean all parts in solvent, dry them, and apply lubricant to all contact surfaces.

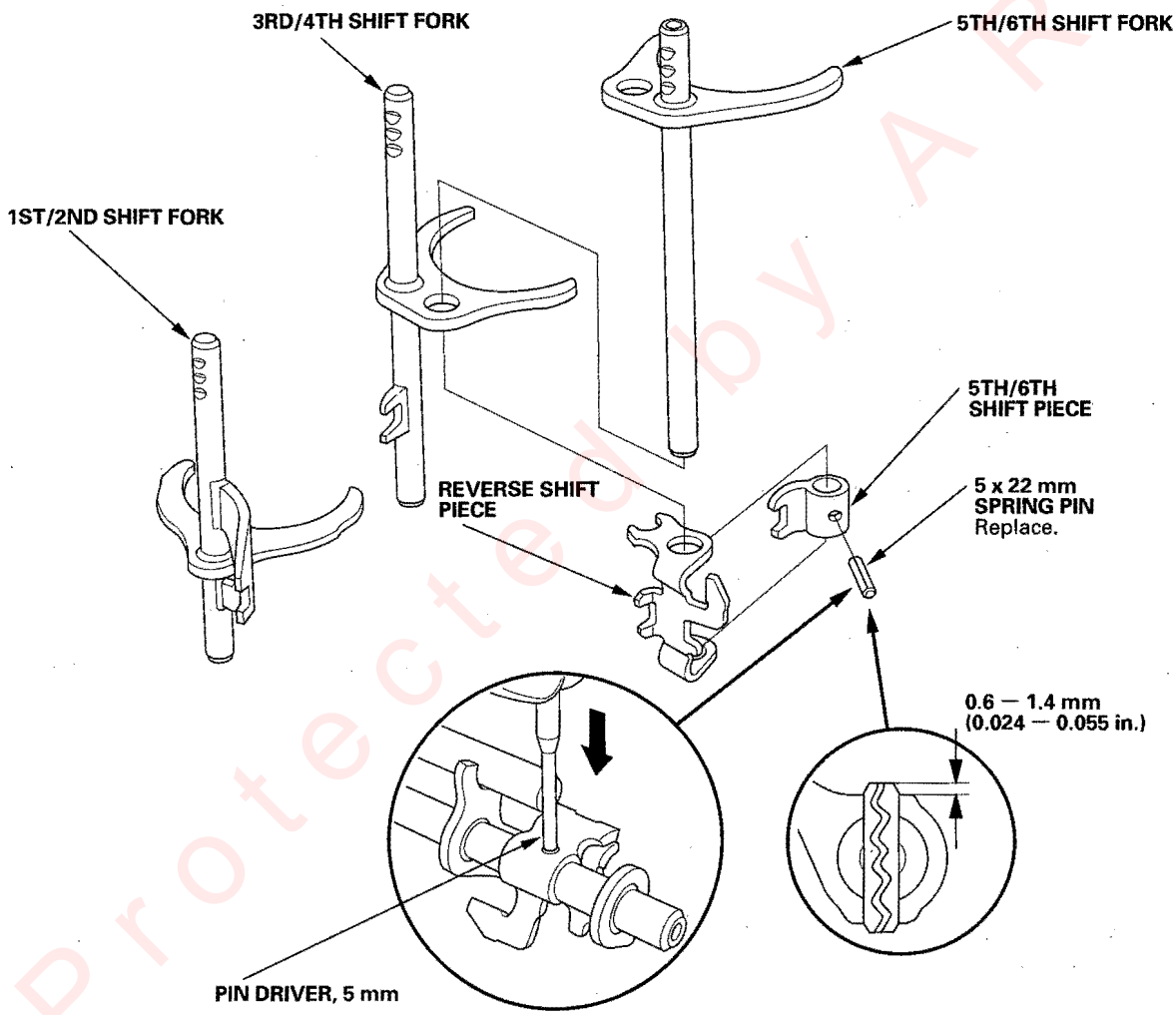

Protected by AR

Mainshaft Assembly Clearance Inspection

NOTE: If replacement is required, always replace the synchro sleeve and hub as a set.

1. Support the bearing inner race with an appropriate sized socket (A), and push down on the mainshaft (B).

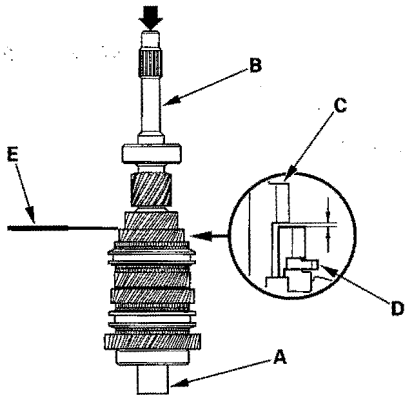

2. Measure the clearance between 2nd (C) and 3rd (D) gears with a feeler gauge (E).

   - If the clearance is more than the service limit, go to step 3.
   - If the clearance is within the service limit, go to step 4.

   Standard: 0.06—0.19 mm (0.002—0.007 in.)
   Service Limit: 0.3 mm (0.01 in.)

3. Measure the thickness of 3rd gear.

   - If the thickness is less than the service limit, replace 3rd gear.
   - If the thickness is within the service limit, replace the 3rd/4th synchro hub/sleeve.

   Standard: 23.89—23.97 mm (0.941—0.944 in.)
   Service Limit: 23.8 mm (0.94 in.)

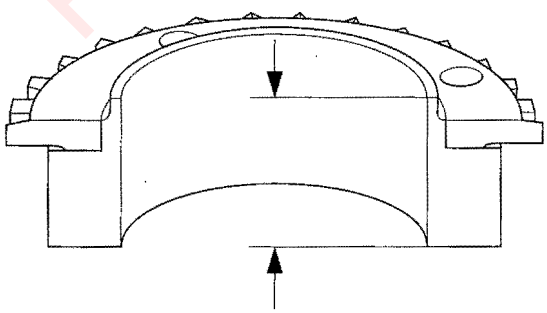

4. Measure the clearance between 4th gear (A) and the distance collar (B) with a dial indicator (C). If the clearance is more than the service limit, go to step 5.

   Standard: 0.06—0.19 mm (0.002—0.007 in.)
   Service Limit: 0.3 mm (0.01 in.)

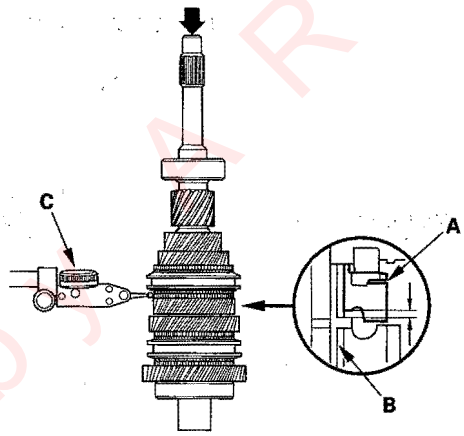

5. Measure distance ① on the 4th gear side distance collar.

   - If distance ① is not within the standard, replace the distance collar.
   - If distance ① is within the standard, go to step **6**.

   Standard: 22.53—22.58 mm (0.887—0.889 in.)

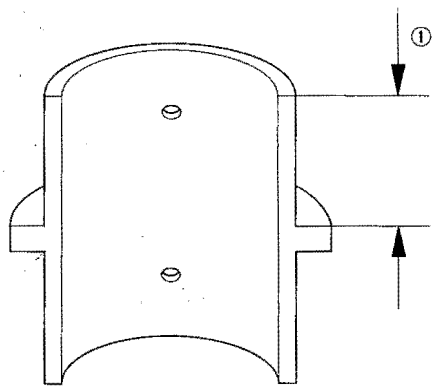

Protected by AR

6. Measure the thickness of 4th gear.

   - If the thickness is less than the service limit, replace 4th gear.
   - If the thickness is within the service limit, replace the 3rd/4th synchro hub/sleeve.

   Standard: 22.39—22.47 mm (0.881—0.885 in.)
   Service Limit: 22.3 mm (0.88 in.)

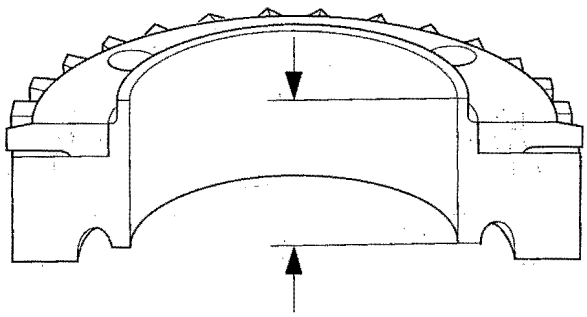

7. Measure the clearance between the distance collar (A) and 5th gear (B) with a dial indicator (C). If the clearance is more than the service limit, go to step 8.

   Standard: 0.06—0.19 mm (0.002—0.007 in.)
   Service Limit: 0.3 mm (0.01 in.)

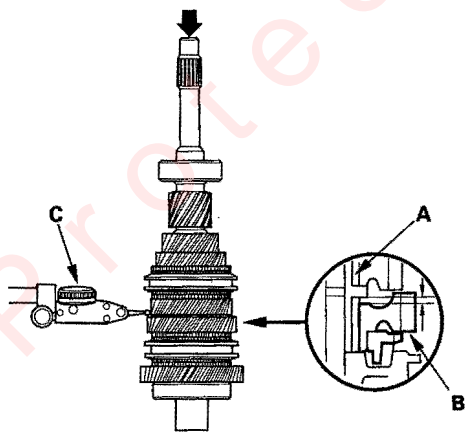

8. Measure distance ② on the 5th gear side distance collar.

   - If distance ② is not within the standard, replace the distance collar.
   - If distance ② is within the standard, go to step 9.

   Standard: 22.53—22.58 mm (0.887—0.889 in.)

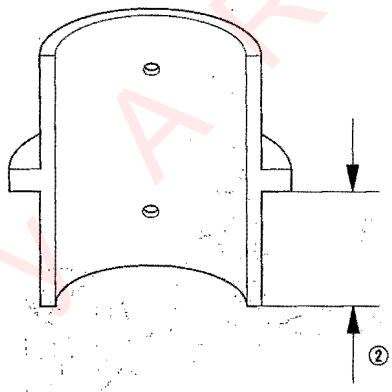

9. Measure the thickness of 5th gear.

   - If the thickness is less than the service limit, replace 5th gear.
   - If the thickness is within the service limit, replace the 5th/6th synchro hub/sleeve.

   Standard: 22.39—22.47 mm (0.881—0.885 in.)
   Service Limit: 22.3 mm (0.88 in.)

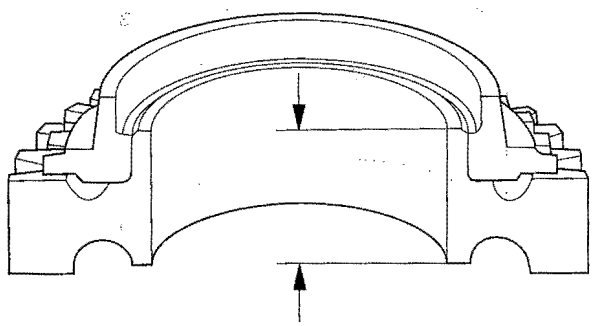

(cont'd)

Mainshaft Assembly Clearance Inspection (cont'd)

10. Measure the clearance between 6th gear (A) and the angular ball bearing inner race (B) with a dial indicator (C). If the clearance is more than the service limit, go to step 11.

Standard: 0.06–0.19 mm (0.002–0.007 in.)
Service Limit: 0.3 mm (0.01 in.)

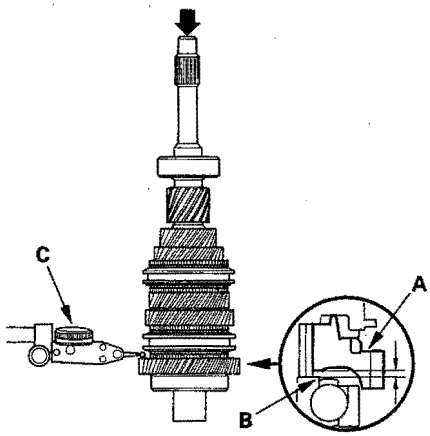

11. Measure the thickness of the distance collar.

- If the thickness is less than the standard, replace the distance collar.
- If the thickness is within the standard, go to step 12.

Standard: 22.03–22.08 mm (0.867–0.869 in.)

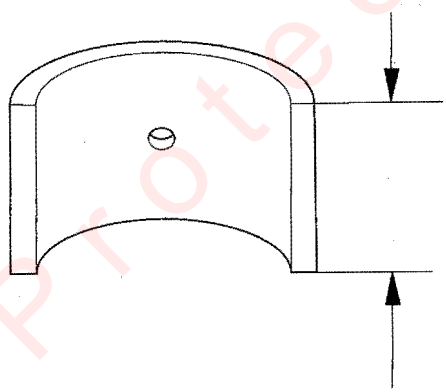

12. Measure the thickness of 6th gear.

- If the thickness is less than the service limit, replace 6th gear.
- If the thickness is within the service limit, replace the 5th/6th synchro hub/sleeve.

Standard: 21.89–21.97 mm (0.862–0.865 in.)
Service Limit: 21.8 mm (0.86 in.)

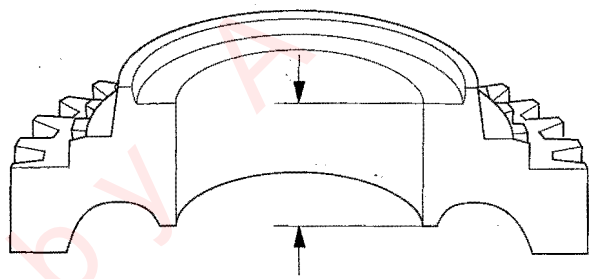

Protected by FAR

Mainshaft Disassembly

1. Support 6th gear (A) on the steel blocks, and press the mainshaft out of the ball bearing (B). Use of a jaw-type puller can damage the gear teeth.

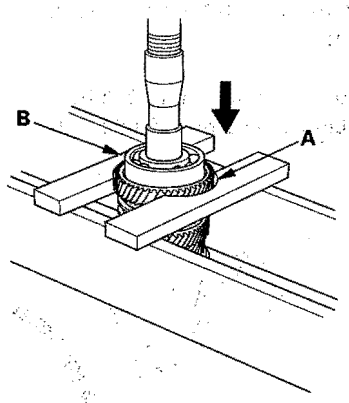

2. Support 5th gear (A) on the steel blocks, and press the mainshaft out of the 5th/6th synchro hub (B). Use of a jaw-type puller can damage the gear teeth.

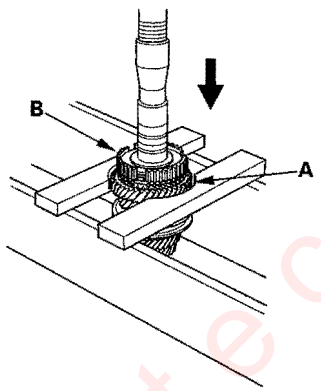

3. Support 3rd gear (A) on the steel blocks, and press the mainshaft out of the 3rd/4th synchro hub (B). Use of a jaw-type puller can damage the gear teeth.

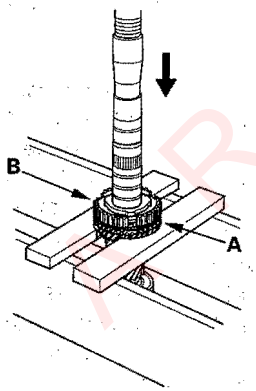

4. Support the angular ball bearing on the steel blocks, and press out the mainshaft.

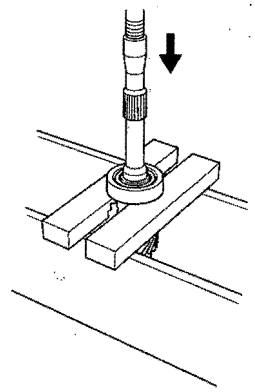

Protected by ARR

Mainshaft Inspection

1. Inspect the oil passage, gear, and bearing surfaces for wear and damage, then measure the mainshaft at points A, B, C, D, E, and F. If any part of the mainshaft is less than the service limit, replace it.

Standard:
A Ball bearing surface (transmission housing side):
30.987—31.000 mm (1.2200—1.2205 in.)
B 6th gear distance collar surface:
32.987—33.000 mm (1.2987—1.2992 in.)
C 4th/5th gear distance collar surface:
35.987—36.000 mm (1.4168—1.4173 in.)
D Needle bearing surface:
41.984—42.000 mm (1.6529—1.6535 in.)
E Ball bearing surface (clutch housing side):
28.002—28.015 mm (1.1024—1.1030 in.)
F Pilot bearing surface:
19.967—19.980 mm (0.7861—0.7866 in.)
Service Limit:
A: 30.93 mm (1.218 in.)
B: 32.93 mm (1.296 in.)
C: 35.93 mm (1.415 in.)
D: 41.93 mm (1.651 in.)
E: 27.95 mm (1.100 in.)
F: 19.91 mm (0.784 in.)

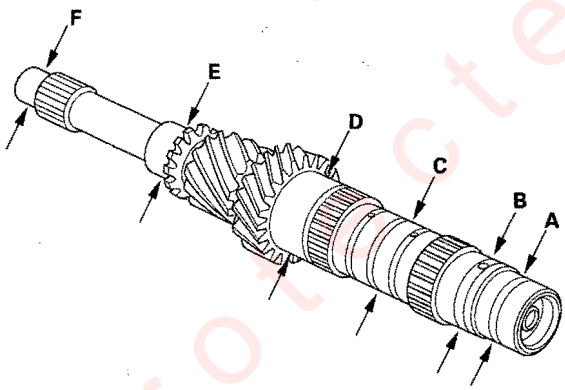

2. Inspect the runout by supporting both ends of the mainshaft. Then rotate the mainshaft two complete turns while measuring with a dial gauge. If the runout is more than the service limit, replace the mainshaft.

Standard: 0.02 mm (0.001 in.) max.
Service Limit: 0.05 mm (0.002 in.)

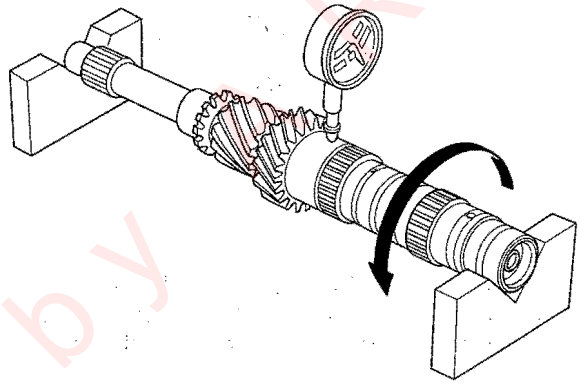

Protected by

Mainshaft Reassembly

Exploded View

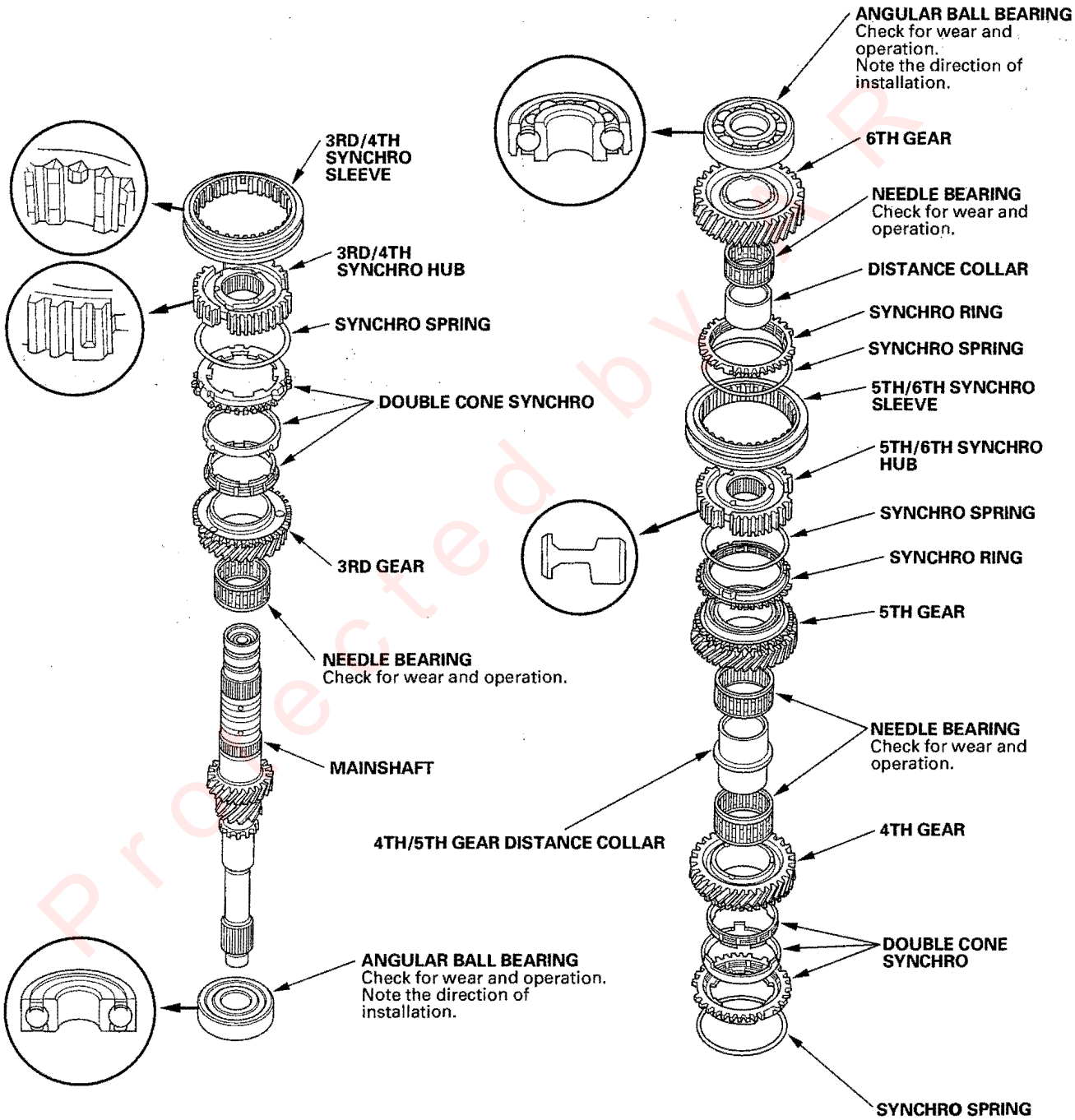

Protected by KAR

(cont'd)

Mainshaft Reassembly (cont'd)

Special Tools Required
- Driver, 40 mm I.D. 07746-0030100
- Driver, 30 mm I.D. 07946-MB00000

NOTE: Refer to the Exploded View as needed during this procedure.

1. Clean all parts in solvent, dry them, and apply lubricant to all contact surfaces except the 3rd/4th and 5th/6th synchro hubs.

2. Install the new angular ball bearing (A) using the special tool and a press. Note the direction of installation.

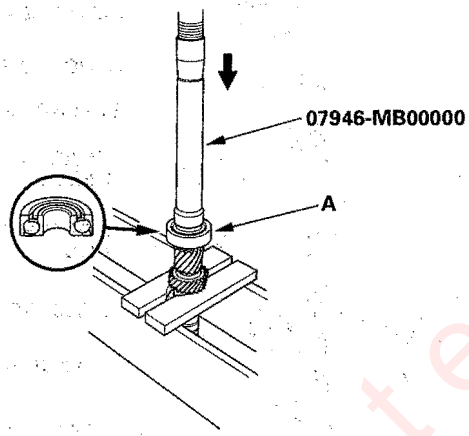

3. Install the needle bearing (A) and 3rd gear (B) on the mainshaft (C).

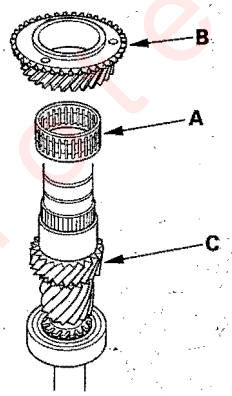

4. Install the double cone synchro assembly (A) by aligning the synchro cone fingers (B) with the holes in 3rd gear (C), then install the synchro spring (D).

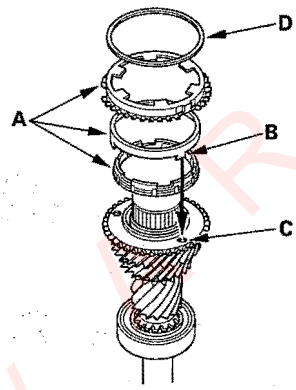

5. Install the 3rd/4th synchro hub (A) by aligning the outer synchro ring fingers (B) with the grooves in the 3rd/4th synchro hub (C).

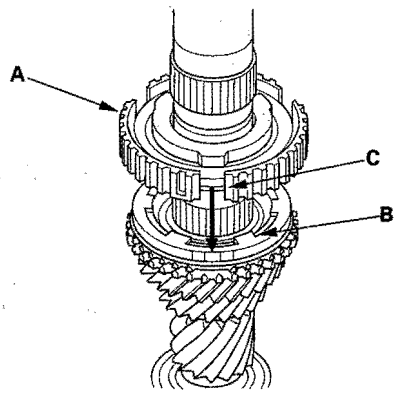

Protected by VAR

6. Install the 3rd/4th synchro hub (A) using the special tool.

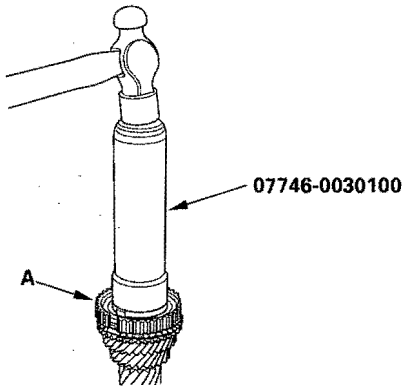

7. Install the 3rd/4th synchro sleeve (A) by aligning the stops (B) with the 3rd/4th synchro sleeve and hub. After installing, check the operation of the 3rd/4th synchro hub set.

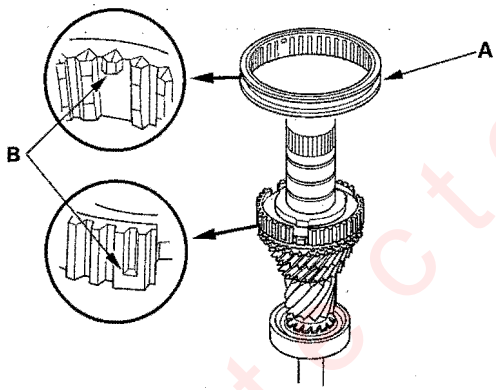

8. Install the synchro spring (A).

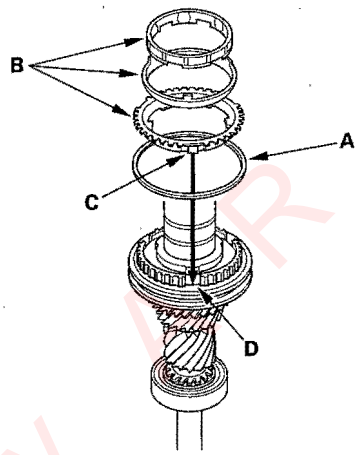

9. Install the double cone synchro assembly (B) by aligning the outer synchro ring fingers (C) with the grooves in 3rd/4th synchro hub (D).

10. Install 4th gear (A) by aligning the synchro cone fingers (B) with the holes in 4th gear (C).

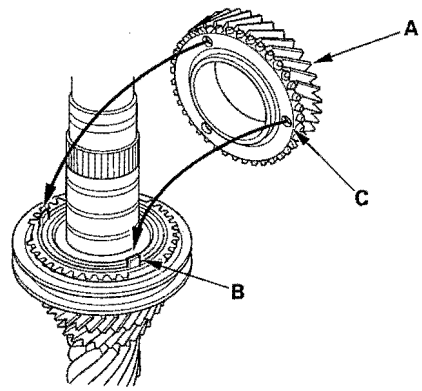

11. Install the needle bearings, distance collar, 5th gear, synchro ring, and synchro spring.

(cont'd)

Protected by ARR

Mainshaft Reassembly (cont'd)

12. Install the 5th/6th synchro hub (A) by aligning the outer synchro ring fingers (B) with the grooves in 5th/6th synchro hub (C).

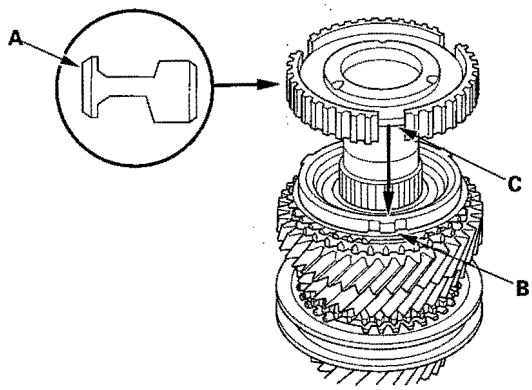

13. Install the 5th/6th synchro hub (A) using the special tool.

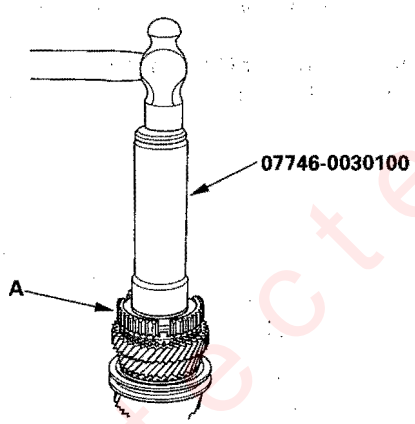

14. Install the 5th/6th synchro sleeve.

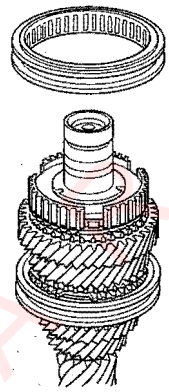

15. Install the synchro spring and synchro ring.

16. Install the distance collar, needle bearing, and 6th gear.

17. Install the new angular ball bearing (A) using the special tool. Note the direction of installation.

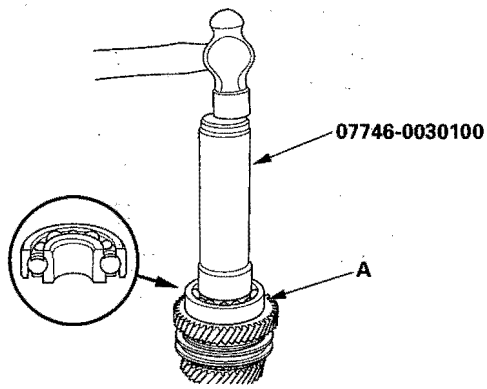

Protected by A

Countershaft Assembly Clearance Inspection

NOTE: Before inspection, check that the 20 mm special bolt is tightened to the specified torque.

1. Measure the clearance between 1st gear (A) and the countershaft reverse gear (B) with a dial indicator (C). If the clearance is more than the service limit, go to step 2.

   Standard: 0.04—0.17 mm (0.002—0.007 in.)
   Service Limit: 0.28 mm (0.011 in.)

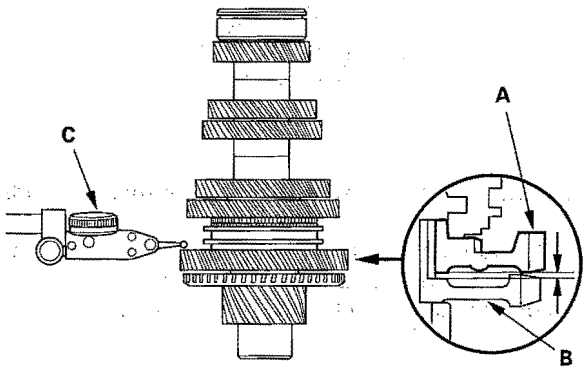

2. Measure the distance of the countershaft reverse gear.

   - If the distance is less than the standard, replace the countershaft reverse gear.
   - If the thickness is within the standard, go to step 3.

   Standard: 23.03—23.08 mm (0.907—0.909 in.)

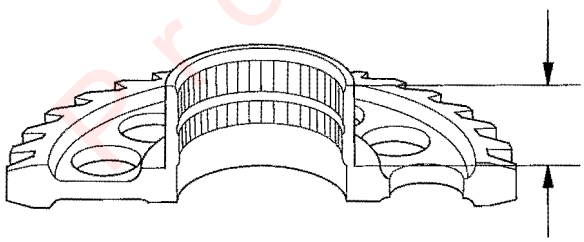

3. Measure the thickness of 1st gear.

   - If the thickness is less than the service limit, replace 1st gear.
   - If the thickness within the service limit, replace the 1st/2nd synchro hub/sleeve.

   Standard: 22.91—22.99 mm (0.902—0.905 in.)
   Service Limit: 22.86 mm (0.900 in.)

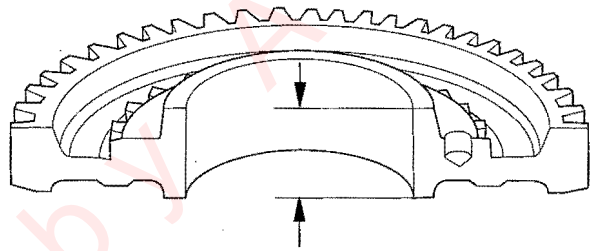

4. Measure clearance between 2nd gear (A) and 3rd gear (B) with a feeler gauge (C). If the clearance is more than the service limit, go to step 5.

   Standard: 0.04—0.17 mm (0.002—0.007 in.)
   Service Limit: 0.28 mm (0.011 in.)

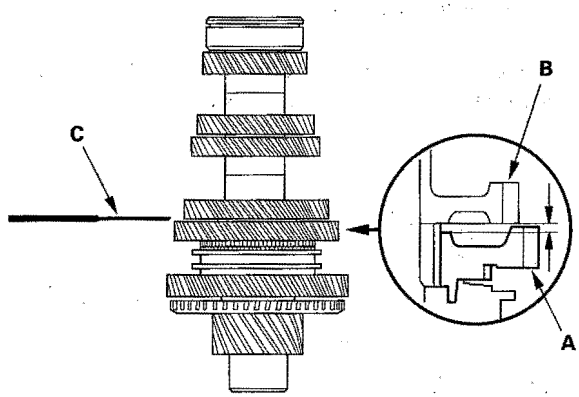

(cont'd)

Protected by A R

Countershaft Assembly Clearance Inspection (cont'd)

5. Measure the thickness of the distance collar.

   - If the thickness is less than the standard, replace the distance collar.
   - If the thickness is within the standard, go to step 6.

   Standard: 23.03—23.08 mm (0.907—0.909 in.)

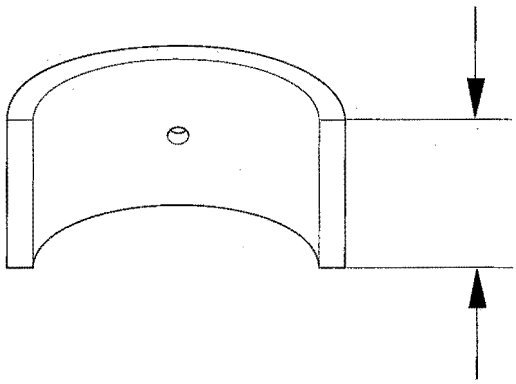

6. Measure the thickness of 2nd gear.

   - If the thickness is less than the service limit, replace 2nd gear.
   - If the thickness is within the service limit, replace the 1st/2nd synchro hub.

   Standard: 22.91—22.99 mm (0.902—0.905 in.)
   Service Limit: 22.86 mm (0.900 in.)

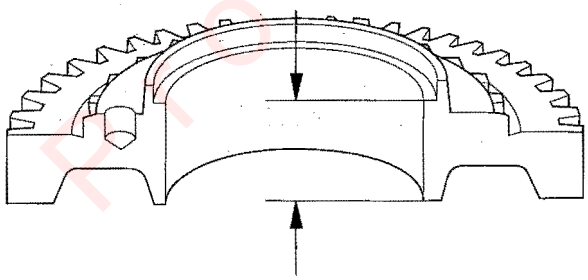

Countershaft Disassembly

1. Securely clamp the countershaft assembly in a bench vise with wood blocks.

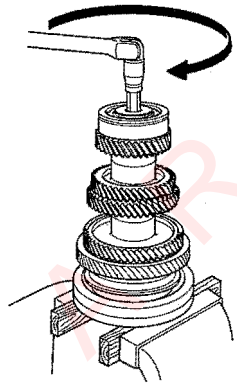

2. Remove the 20 mm special bolt (left-hand threads).

3. Support 6th gear (A) on steel blocks (B), then use a press (C) and an attachment (D) to press the countershaft (E) out of the ball bearing.

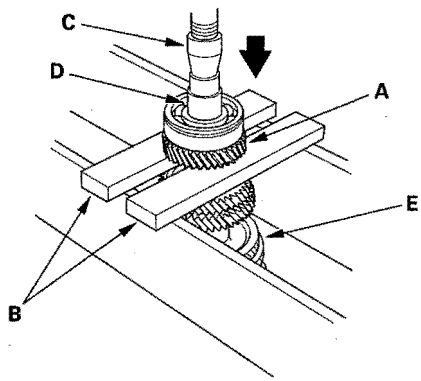

4. Remove the 35 mm shim and 6th gear.

Protected by HR

5. Support 4th gear (A) on steel blocks (B), then use a press (C) and an attachment (D) to press the countershaft (E) out of 4th and 5th gear.

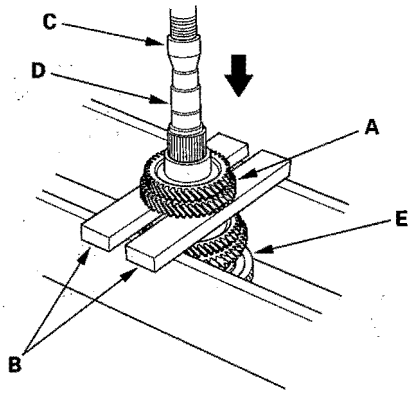

6. Support 2nd gear (A) on steel blocks (B), then use a press (C) and an attachment (D) to press the countershaft (E) out of 2nd and 3rd gear.

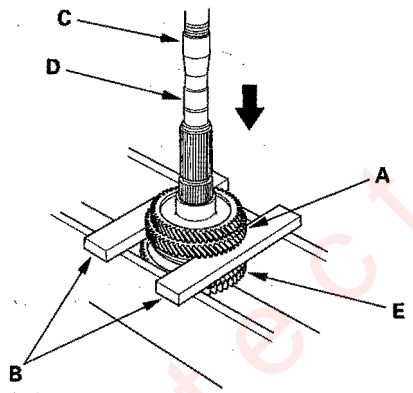

Countershaft Inspection

1. Inspect the oil passage, gear, and bearing surfaces for wear and damage, then measure the countershaft at points A, B, C, and D. If any part of the countershaft is less than the service limit, replace it.

Standard:
A Ball bearing surface (transmission housing side):
30.002–30.015 mm (1.1812–1.1817 in.)
B Distance collar surface:
42.975–42.991 mm (1.6919–1.6926 in.)
C Countershaft reverse gear surface:
45.934–45.950 mm (1.8084–1.8091 in.)
D Needle bearing surface (clutch housing side):
43.974–43.990 mm (1.7313–1.7319 in.)
Service Limit:
A: 29.95 mm (1.179 in.)
B: 42.92 mm (1.690 in.)
C: 45.88 mm (1.806 in.)
D: 43.92 mm (1.729 in.)

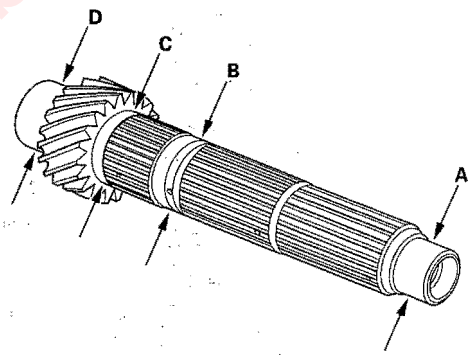

2. Inspect the runout by supporting both ends of the countershaft. Then rotate the countershaft two complete turns while measuring with a dial gauge. If the runout exceeds the service limit, replace the countershaft.

Standard: 0.02 mm (0.001 in.) max.
Service Limit: 0.05 mm (0.002 in.)

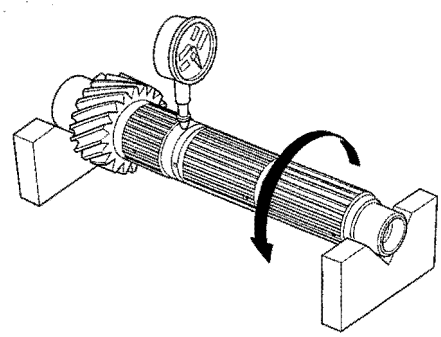

Protected by A

Countershaft Reassembly

Exploded View

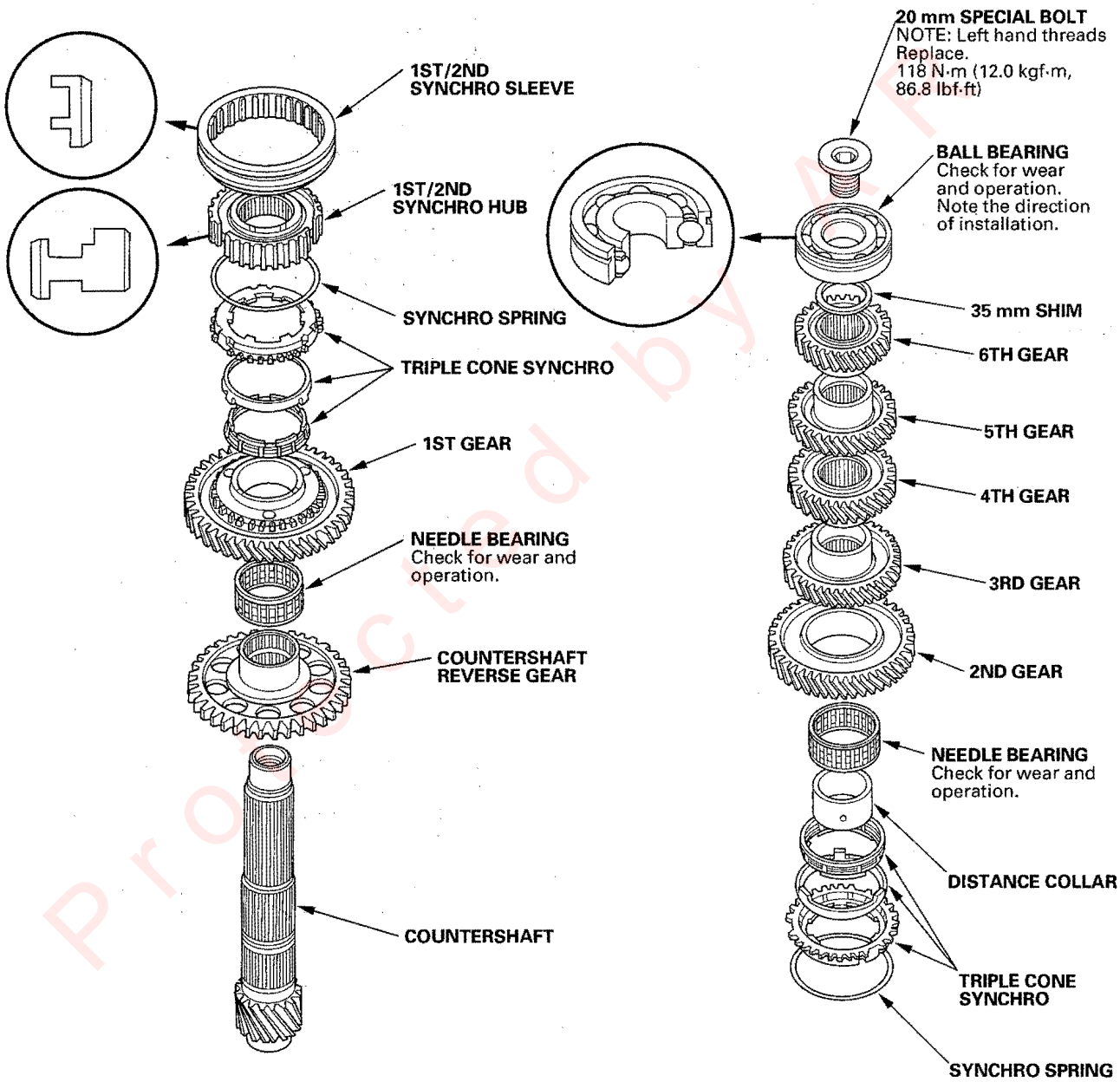

Produced by

Special Tools Required
- Driver, 56 x 62 mm 070AD-PYZA100
- Driver, 40 mm I.D. 07746-0030100

NOTE: Refer to the Exploded View as needed during this procedure.

1. Clean all parts in solvent, dry them, and apply lubricant to all contact surfaces.

2. Install the countershaft reverse gear (A), needle bearing (B), and 1st gear (C) onto the countershaft (D).

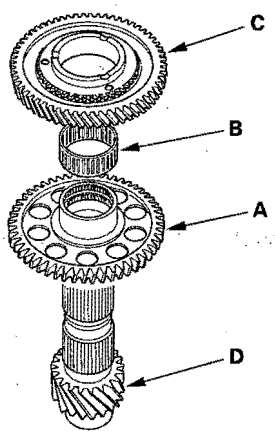

3. Install the triple cone synchro assembly (A) by aligning the synchro cone fingers (B) with the holes in 1st gear (C), then install the synchro spring (D).

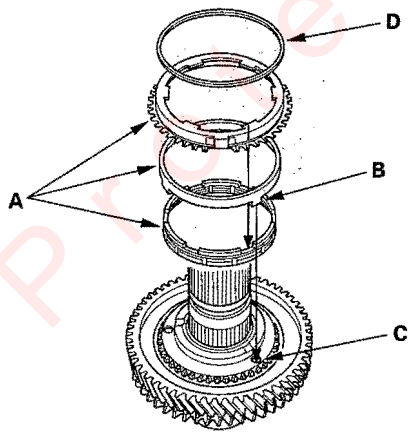

4. Install the 1st/2nd synchro hub (A) by aligning the outer synchro ring fingers (B) with the grooves in the 1st/2nd synchro hub (C).

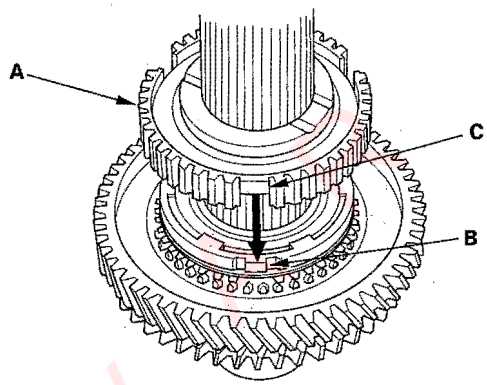

5. Install the 1st/2nd synchro sleeve.

6. Install the synchro spring (A).

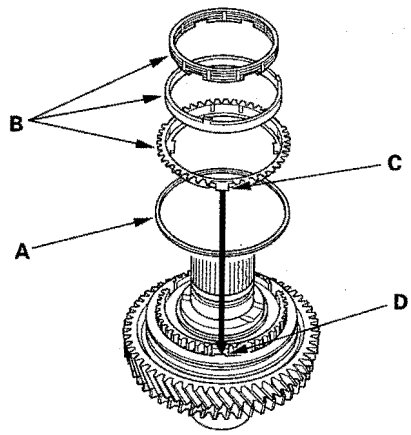

7. Install the triple cone synchro assembly (B) by aligning the outer synchro ring fingers (C) with the grooves in the 1st/2nd synchro hub (D).

8. Install the distance collar and needle bearing.

(cont'd)

Presented by

Countershaft Reassembly (cont'd)

9. Install 2nd gear (A) by aligning the synchro cone fingers (B) with the holes in 2nd gear (C).

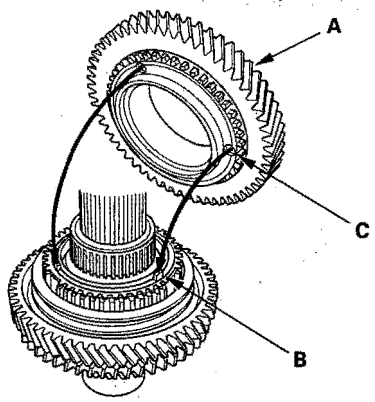

10. Support the countershaft (A) on the steel blocks, then install 3rd gear (B) using the special tool and a press (C).

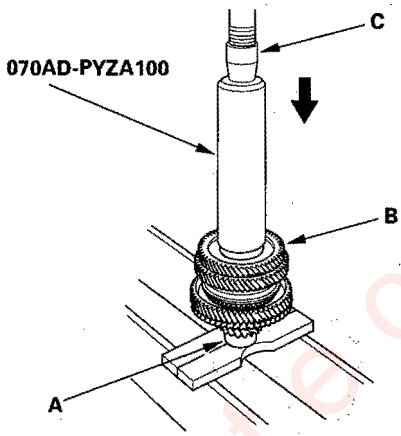

11. Install 4th gear (A) using the special tool and a press (B).

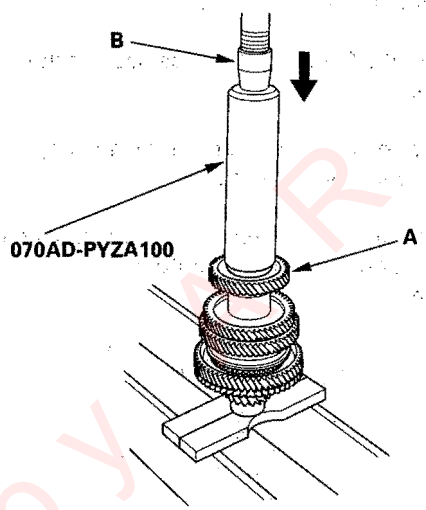

12. Install 5th gear (A) using the special tool and a press (B).

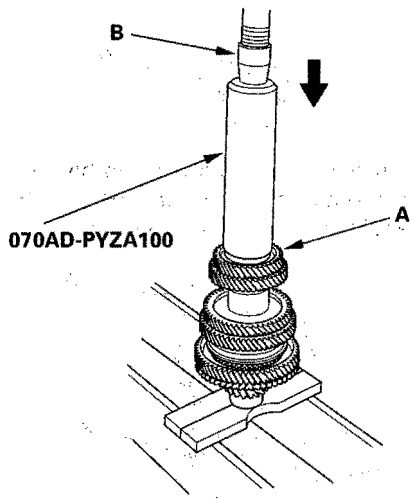

Protected by

13. Install 6th gear (A) using the special tool and a press (B).

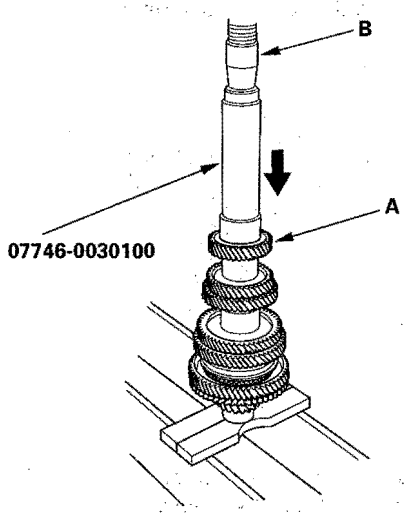

14. Install the 35 mm shim (A) and the old ball bearing (B) using the special tool and a press (C).

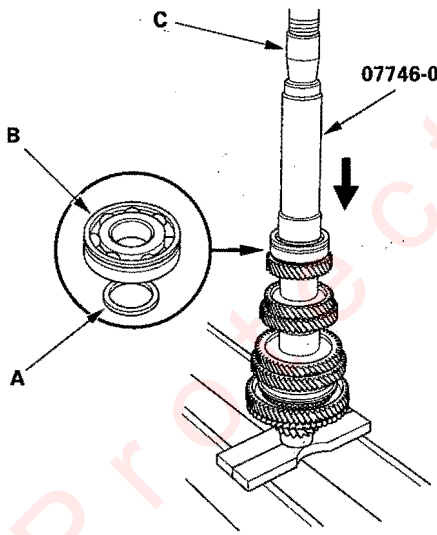

15. Measure the clearance between the old bearing (A) and the 35 mm shim (B) with a feeler gauge (C).

Standard: 0.04—0.10 mm (0.0016—0.0039 in.)

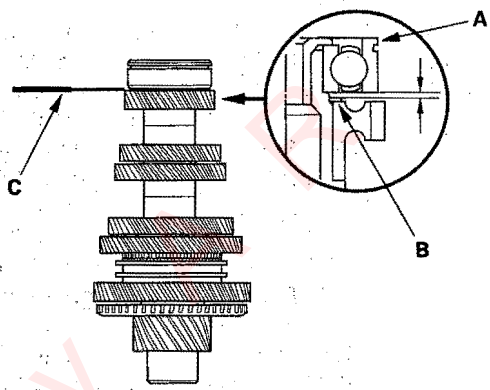

(cont'd)

Protected by

Countershaft Reassembly (cont'd)

16. If the clearance is more than the standard, select a new shim from the following table.

35 mm Shim

	Part Number	Thickness
A	23981-PPP-000	0.87 mm (0.034 in.)
AA	23981-PPP-900	0.91 mm (0.036 in.)
B	23982-PPP-000	0.95 mm (0.037 in.)
AB	23982-PPP-900	0.99 mm (0.039 in.)
C	23983-PPP-000	1.03 mm (0.041 in.)
AC	23983-PPP-900	1.07 mm (0.042 in.)
D	23984-PPP-000	1.11 mm (0.044 in.)
AD	23984-PPP-900	1.15 mm (0.045 in.)
E	23985-PPP-000	1.19 mm (0.047 in.)
AE	23985-PPP-900	1.23 mm (0.048 in.)
F	23986-PPP-000	1.27 mm (0.050 in.)
AF	23986-PPP-900	1.31 mm (0.052 in.)
G	23987-PPP-000	1.35 mm (0.053 in.)
AG	23987-PPP-900	1.39 mm (0.055 in.)
H	23988-PPP-000	1.43 mm (0.056 in.)
AH	23988-PPP-900	1.47 mm (0.058 in.)
J	23989-PPP-000	1.51 mm (0.059 in.)
AJ	23989-PPP-900	1.55 mm (0.061 in.)
K	23990-PPP-000	1.59 mm (0.063 in.)
AK	23990-PPP-900	1.63 mm (0.064 in.)
L	23991-PPP-000	1.67 mm (0.066 in.)
AL	23991-PPP-900	1.71 mm (0.067 in.)
M	23992-PPP-000	1.75 mm (0.069 in.)
AM	23992-PPP-900	1.79 mm (0.070 in.)
N	23993-PPP-000	1.83 mm (0.072 in.)
AN	23993-PPP-900	1.87 mm (0.074 in.)
P	23994-PPP-000	1.91 mm (0.075 in.)
AP	23994-PPP-900	1.95 mm (0.077 in.)
Q	23995-PPP-000	1.99 mm (0.078 in.)

17. Support 6th gear (A) on steel blocks (B), then using a press (C) and an attachment (D) to press the countershaft out of the old ball bearing.

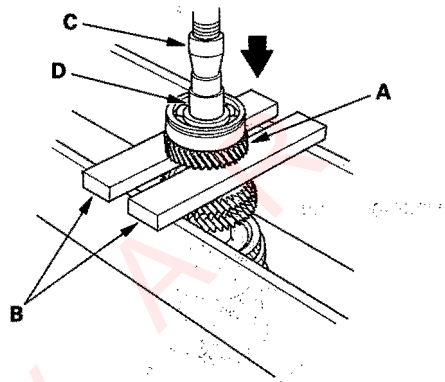

18. If a new 35 mm shim was selected in step 16, install the shim, and recheck the clearance.

19. Install 6th gear (A) using the special tool and a press (B).

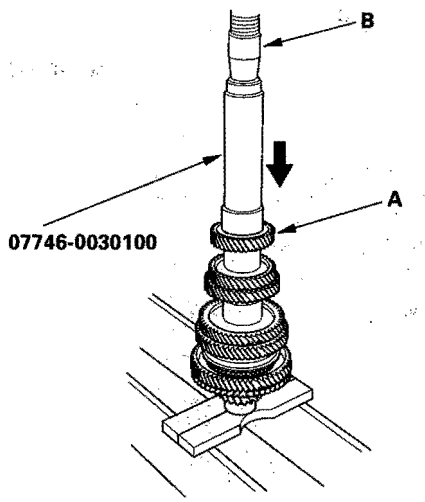

Protected by ARK

20. Install the 35 mm shim (A) and new bearing (B) using the special tool and a press (C).

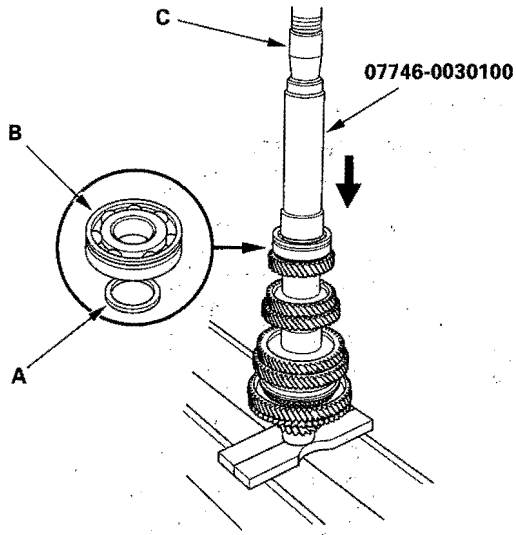

21. Securely clamp the countershaft assembly in a bench vise with wood blocks (A).

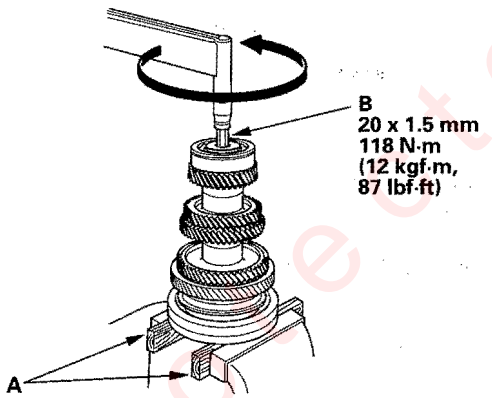

22. Tighten the new 20 mm special bolt (B) (left-hand threads).

Protected by AR

Reverse Idler Gear Shaft Assembly Disassembly/Reassembly

Prior to reassembling, clean all the parts in solvent, dry them, and apply lubricant to all contact surfaces.

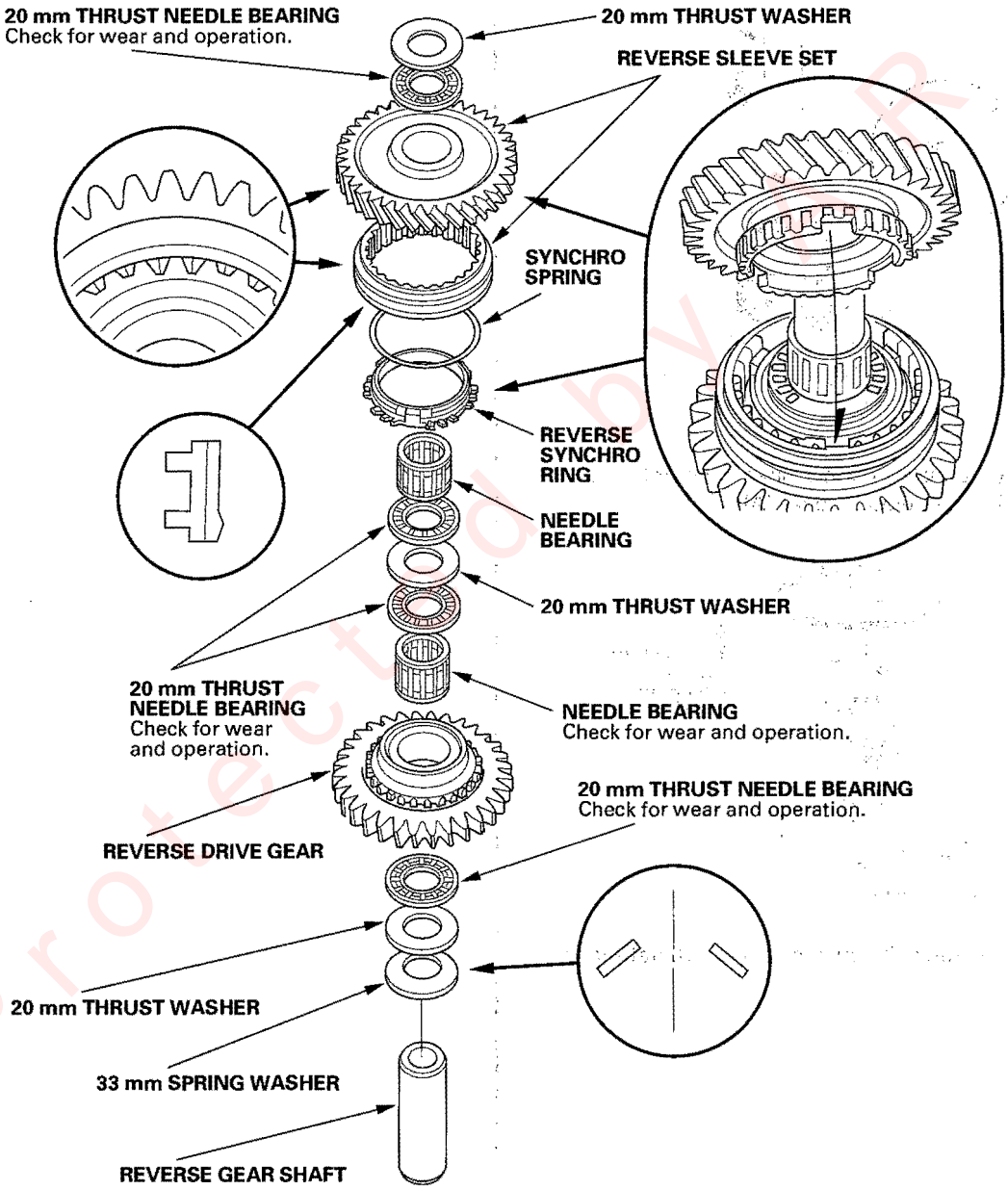

Protected by

Synchro Sleeve and Hub Inspection and Reassembly

1. Inspect gear teeth on all synchro hubs and synchro sleeves for wear (rounded off corners).

2. Install each synchro hub (A) in its mating synchro sleeve (B), and check for free movement. Make sure you match the three sets of longer teeth (C) (120 degrees apart) on the synchro sleeve with the three sets of deeper grooves (D) in the synchro hub. Do not install the synchro sleeve with its longer teeth in the synchro hub slots (E) because it will damage the spring ring.

   NOTE: If replacement is required, always replace the synchro sleeve and synchro hub as a set.

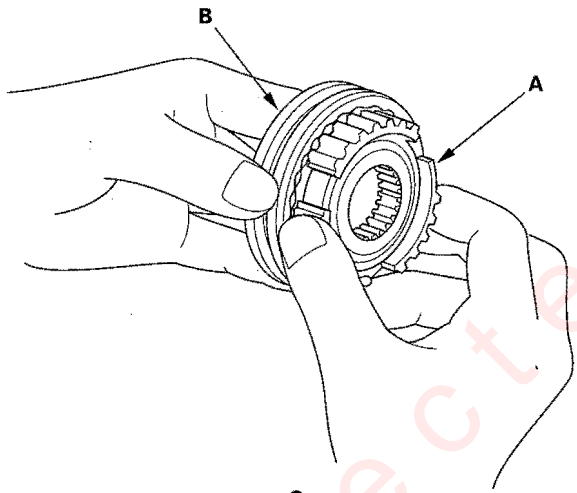

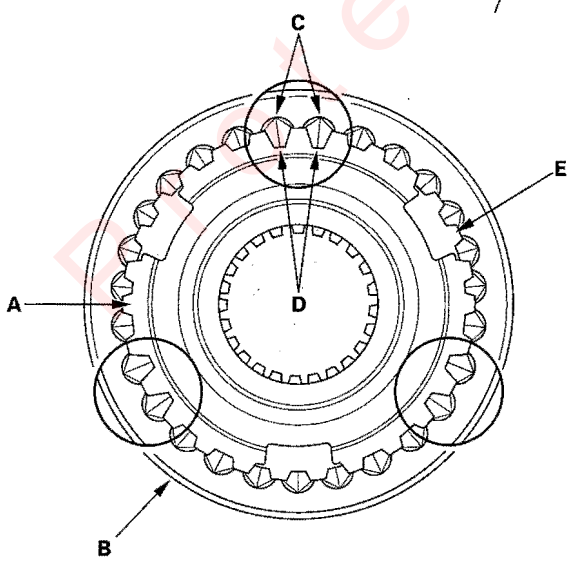

Synchro Ring and Gear Inspection

1. Inspect the inside of each synchro ring (A) for wear. Inspect the teeth (B) on each synchro ring for wear (rounded off).

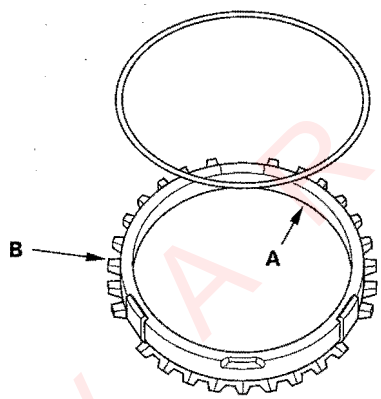

Example of synchro ring teeth



2. Inspect the teeth (C) on each synchro sleeve and matching teeth on each gear for wear (rounded off).

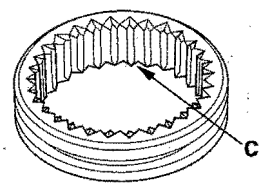

Example of synchro sleeve teeth and gear teeth

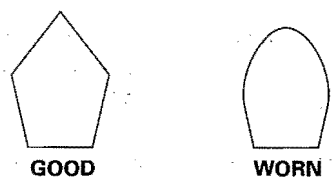

(cont'd)

Protected by AR

Synchro Ring and Gear Inspection (cont'd)

3. Inspect the thrust surface (D) on each gear hub for wear.

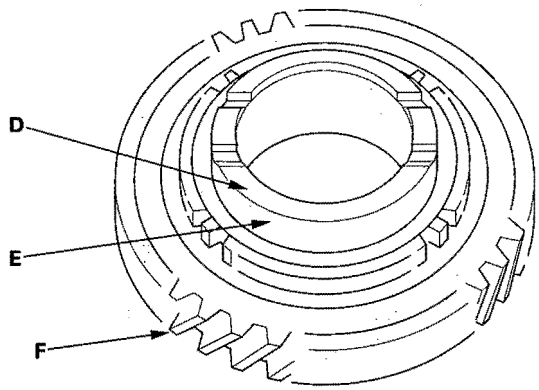

4. Inspect the cone surface (E) on each gear for wear and roughness.

5. Inspect the teeth on all gears (F) for uneven wear, scoring, gailling, and cracks.

6. Coat the cone surface of each gear (E) with oil, and place its synchro ring on it. Rotate the synchro ring, making sure that it does not slip.

7. Measure the clearance between each gear (A) and its synchro ring (B) all around the gear. Hold the synchro ring against the gear evenly while measuring the clearance. If the clearance is less than the service limit, replace the synchro ring and synchro cone.

Synchro Ring-to-Gear Clearance
Standard:
5th gear: 0.70—1.49 mm (0.028—0.059 in.)
6th gear: 0.73—1.44 mm (0.029—0.057 in.)
Service Limit: 0.4 mm (0.016 in.)

Double Cone Synchro-to-Gear Clearance
Standard:
①: Outer Synchro Ring (B) to Synchro Cone (C)
0.70—1.19 mm (0.028—0.047 in.)
②: Synchro Cone (C) to Gear (A)
0.50—1.04 mm (0.020—0.041 in.)
③: Outer Synchro Ring (B) to Gear (A)
0.95—1.68 mm (0.037—0.066 in.)
Service Limit:
①: 0.3 mm (0.012 in.)
②: 0.3 mm (0.012 in.)
③: 0.6 mm (0.024 in.)

Triple Cone Synchro-to-Gear Clearance
Standard:
①: Outer Synchro Ring (B) to Synchro Cone (C)
1st gear: 0.70—1.19 mm (0.028—0.047 in.)
2nd gear: 0.70—1.19 mm (0.028—0.047 in.)
②: Synchro Cone (C) to Gear (A)
1st gear: 0.45—1.14 mm (0.018—0.045 in.)
2nd gear: 0.60—1.88 mm (0.024—0.074 in.)
③: Outer Synchro Ring (B) to Gear (A)
1st gear: 1.12—1.68 mm (0.044—0.066 in.)
2nd gear: 0.87—1.82 mm (0.034—0.072 in.)
Service Limit:
①: 0.3 mm (0.012 in.)
②: 0.3 mm (0.012 in.)
③: 0.6 mm (0.024 in.)

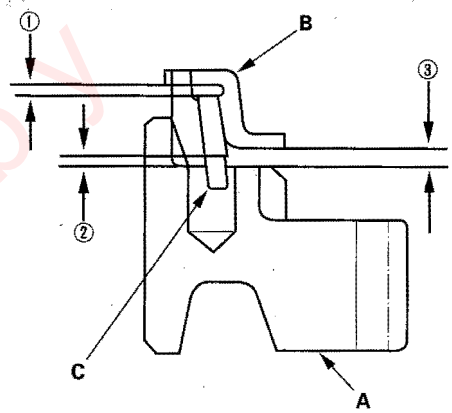

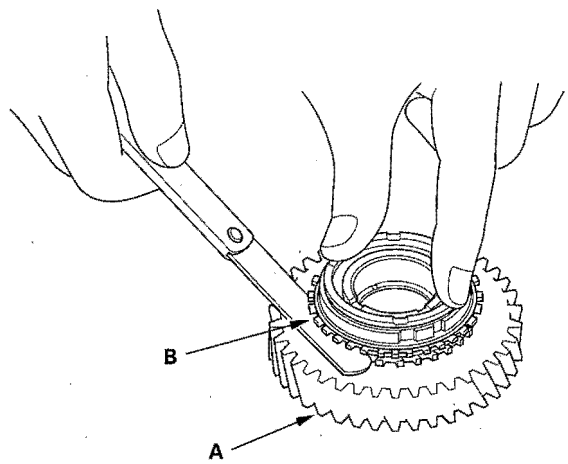

Mainshaft Oil Seal Replacement

Special Tools Required
- Attachment, 42 x 47 mm 07746-0010300
- Driver 07749-0010000

1. Remove the mainshaft assembly.

2. Remove the oil seal from the clutch housing. Be careful when removing the seal so the clutch housing is not damaged.

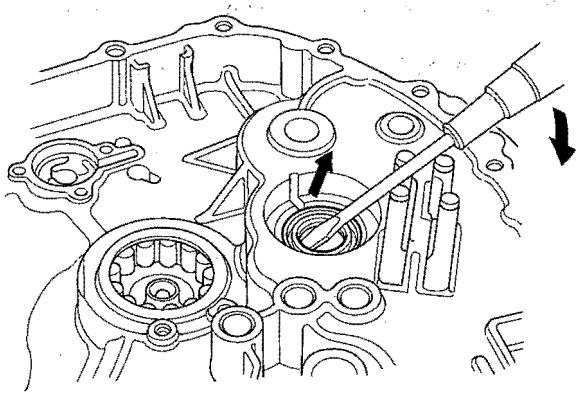

3. Drive in the new oil seal from the transmission side using the special tools.

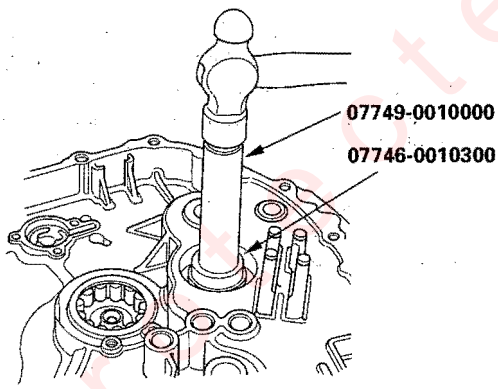

Countershaft Bearing Replacement

Special Tools Required
- Adjustable bearing puller, 45—75 mm 07YAC-0010100
- Attachment, 72 x 75 mm 07746-0010600
- Driver 07749-0010000
- Slide hammer, commercially available

1. Remove the bearing set plate (A) from the clutch housing (B).

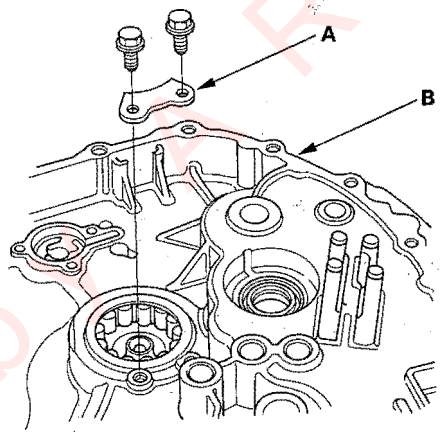

2. Remove the needle bearing (A) from the clutch housing (B) using the special tool and a commercially available 3/8″-16 slide hammer (C).

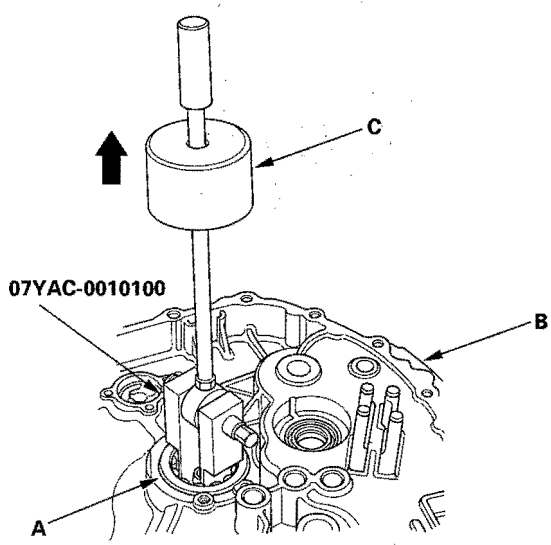

(cont'd)

Protected by

Countershaft Bearing Replacement (cont'd)

3. Install the new needle bearing (A) using the special tool.

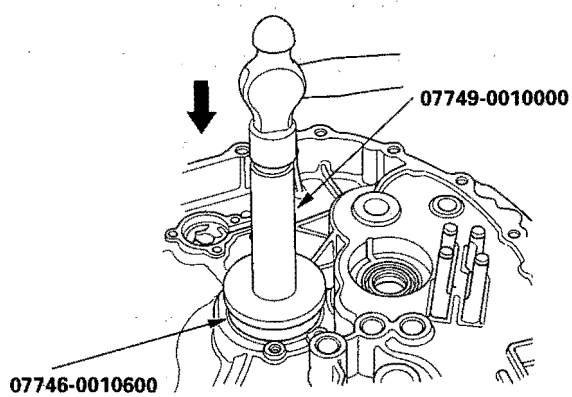

4. Install the bearing set plate (A) with bolts (B).

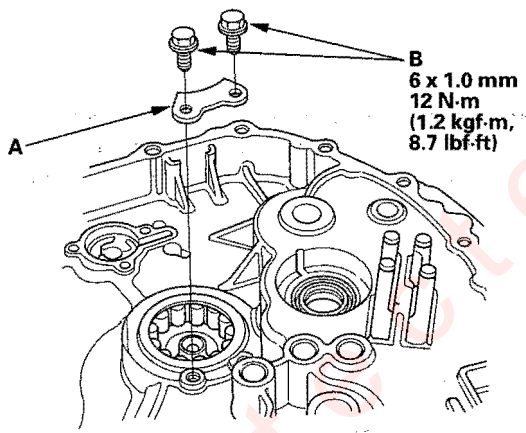

Mainshaft Thrust Clearance Adjustment

Special Tools Required
- Mainshaft holder 07GAJ-PG20110
- Mainshaft base 07GAJ-PG20130

NOTE:
- Carry out the measurement at normal room temperature.
- Clean all the parts throughly before installation.

1. Remove the 82 mm shim (A) from the transmission housing (B).

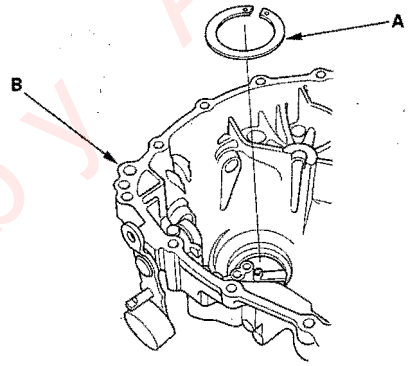

2. Install the ball bearing (A), 3rd/4th synchro hub (B), distance collar (C), 5th/6th synchro hub (D), distance collar (E), and angular ball bearing (F) on the mainshaft (G), then install the assembled mainshaft in the transmission housing (H).

   NOTE: The angular ball bearing is directional. If installed the wrong way, the measurements will not be accurate.

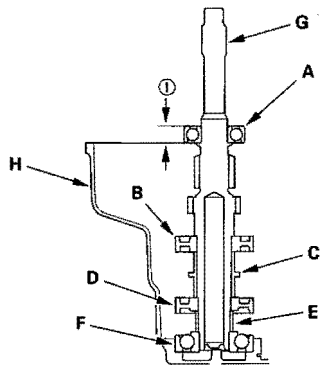

3. Measure distance ① between the end of the transmission housing and ball bearing with a straight edge and depth gauge. Measure at three locations, and average the reading.

Protected by AR

4. Measure distance ② the depth of the clutch housing with a straight edge and depth gauge. Measure at three locations, and average the reading.

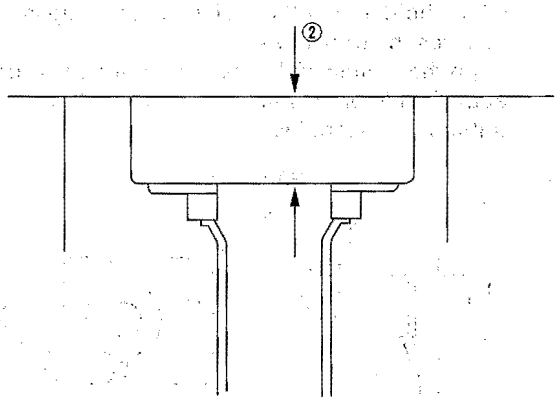

Shim Selection Formula

5. Select the proper 82 mm shim from the chart. Follow the example below, and use the measurements you made in steps 3 and 4.

(Basic Formula)
② − ① − (0.85 + 0.14) = shim thickness (maximum)
② − ① − (0.85 + 0.21) = shim thickness (minimum)

- Subtract distance ② (step 4) from distance ① (step 3).
- 0.85 mm (0.033 in.): Spring washer, a dimension in the installation.
- 0.14 mm (0.006 in.): Minimum thrust clearance.
- 0.21 mm (0.008 in.): Maximum thrust clearance.

(For example)
21.04 − 17.97 − (0.85 + 0.14) = 2.08 mm (0.082 in.)
21.04 − 17.97 − (0.85 + 0.21) = 2.01 mm (0.079 in.)

Take the middle value 2.04 mm (0.080 in.) of the minimum value and the maximum value, and select the 0.93 mm (0.037 in.) and 1.11 mm (0.044 in.) shims.

NOTE: Enable to select the two sizes of 82 mm shim.

82 mm Shim

	Part Number	Thickness
A	23931-PR8-F00	0.60 mm (0.024 in.)
B	23932-PR8-F00	0.63 mm (0.025 in.)
C	23933-PR8-F00	0.66 mm (0.026 in.)
D	23934-PR8-F00	0.69 mm (0.027 in.)
E	23935-PR8-F00	0.72 mm (0.028 in.)
F	23936-PR8-F00	0.75 mm (0.030 in.)
G	23937-PR8-F00	0.78 mm (0.031 in.)
H	23938-PR8-F00	0.81 mm (0.032 in.)
I	23939-PR8-F00	0.84 mm (0.033 in.)
J	23940-PR8-F00	0.87 mm (0.034 in.)
K	23941-PR8-F00	0.90 mm (0.035 in.)
L	23942-PR8-F00	0.93 mm (0.037 in.)
M	23943-PR8-F00	0.96 mm (0.038 in.)
N	23944-PR8-F00	0.99 mm (0.039 in.)
O	23945-PR8-F00	1.02 mm (0.040 in.)
P	23946-PR8-F00	1.05 mm (0.041 in.)
Q	23947-PR8-F00	1.08 mm (0.043 in.)
R	23948-PR8-F00	1.11 mm (0.044 in.)
S	23949-PR8-F00	1.14 mm (0.045 in.)
T	23950-PR8-F00	1.17 mm (0.046 in.)
U	23951-PR8-F00	1.20 mm (0.047 in.)

(cont'd)

Mainshaft Thrust Clearance Adjustment (cont'd)

6. Install the selected 82 mm shim (A) in the transmission housing (B).

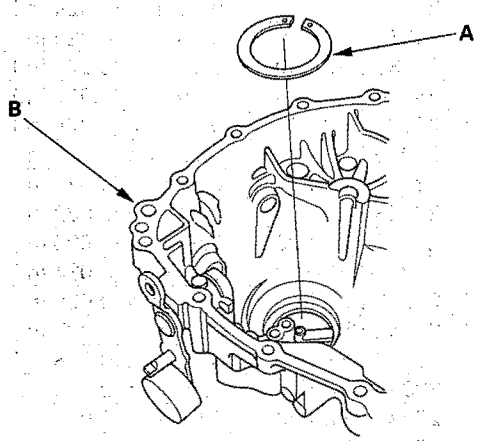

7. Throughly clean the spring washer (A) before installing it on the clutch housing (B). Note the installation direction of the spring washer (see page 13-32).

8. Install the mainshaft in the clutch housing.

9. Place the transmission housing over the mainshaft and onto the clutch housing.

10. Tighten the clutch and transmission housings with several 10 mm bolts.

    NOTE: It is not necessary to use sealing agent between the housings.

11. Lightly tap on the mainshaft with a plastic hammer.

12. Attach the special tool to the mainshaft as follows:

    - Back-out the mainshaft holder bolt (A), and loosen the two hex bolts (B).
    - Fit the holder over the mainshaft so its lip is towards the transmission.
    - Align the mainshaft holder lip around the groove at the inside of the mainshaft splines, then tighten the hex bolts.

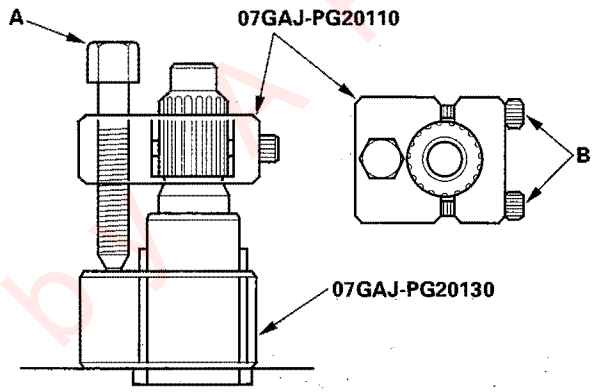

13. Seat the mainshaft fully by tapping on its end with a plastic hammer.

14. Thread the mainshaft holder bolt in until it just contacts the wide surface of the mainshaft base.

Protected by MAR

15. Zero a dial gauge (A) on the end of the mainshaft.

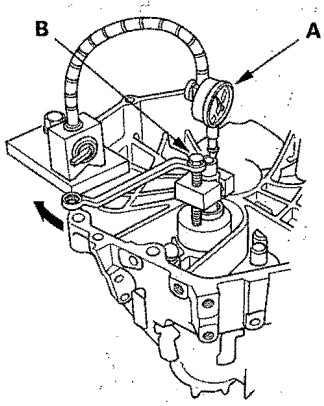

16. Turn the mainshaft holder bolt (B) clockwise; stop turning when the dial gauge has reached its maximum movement. The reading on the dial gauge is the amount of mainshaft end play. Do not turn the mainshaft holder bolt more than 60 degrees after the needle of the dial gauge stops moving. Applying more pressure with the mainshaft holder bolt may damage the transmission.

17. If the reading is within the standard, the clearance is correct. If the reading is not within the standard, recheck the shim thickness.

Standard: 0.14—0.21 mm (0.006—0.008 in.)

NOTE: Prior to reassembling, clean all parts in solvent, dry them, and apply lubricant to all contact surfaces.

1. Press the new dust seal (A) into the transmission housing surface, then install the shift lever (B), shift arm (C), 8 mm spring washer (D), and 8 mm special bolt (E).

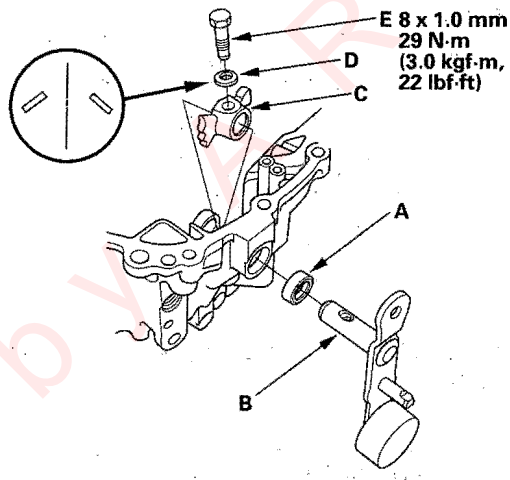

2. Select the proper size 82 mm shim (A) according to the measurements made during the Mainshaft Thrust Clearance Adjustment (see page 13-66). Install it into the transmission housing (B).

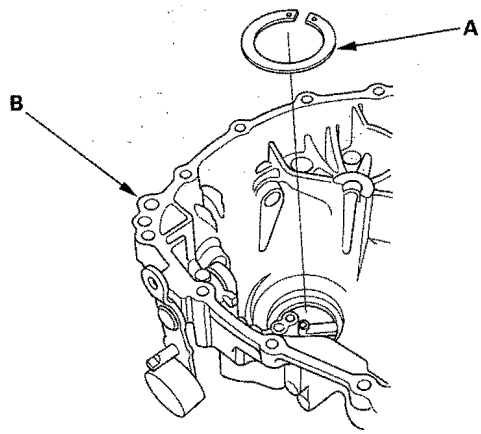

(cont'd)

Protected by AR

Transmission Reassembly (cont'd)

3. Install the steel ball (A), relief valve spring (B), oil pump outer rotor (C), oil pump inner rotor (D), and oil pump plate (E).

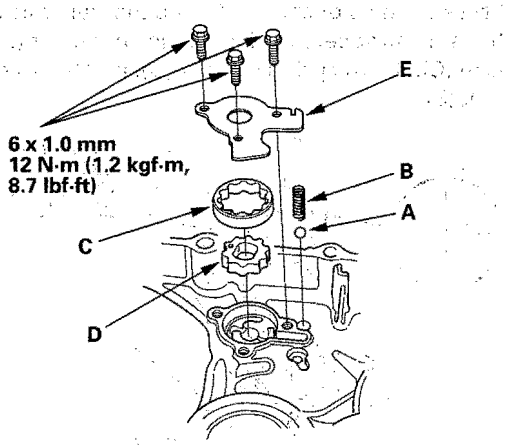

4. Install the differential assembly (A) and oil pump shaft (B).

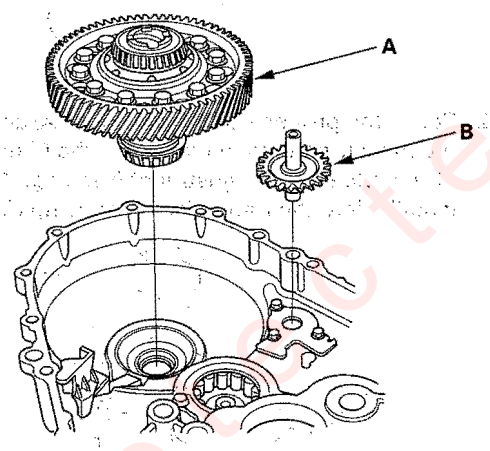

5. Install the 64 mm spring washer (A). Note the installation direction of the 64 mm spring washer.

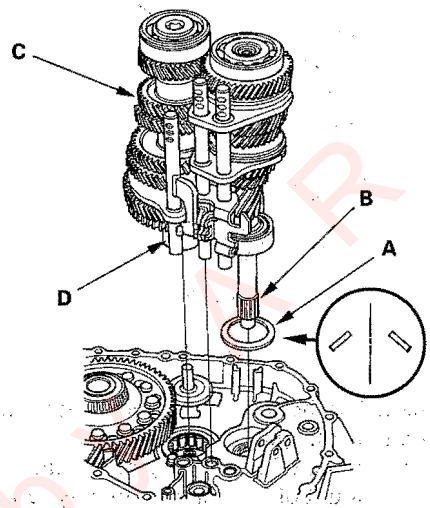

6. Apply tape to the mainshaft splines (B) to protect the seal. Install the mainshaft and countershaft (C) into the shift forks (D) as an assembly.

7. Press the new dust seal (A) into the clutch housing surface, then install the select lever (B), select arm (C), new 5 mm spring pin (D), and new 3 mm spring pin (E).

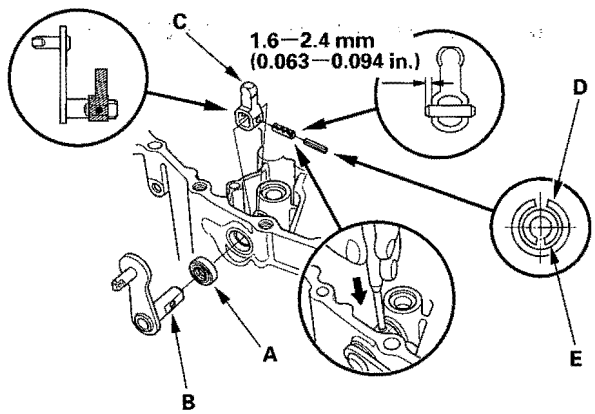

Projected by AR

8. Set the select return spring (A), pin (B), and interlock (C) as shown.

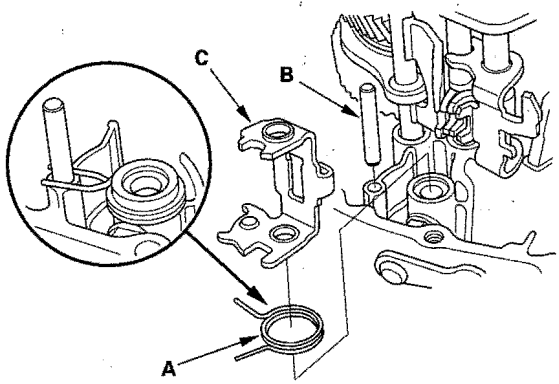

9. Install the shift piece (A) and shift piece shaft (B).

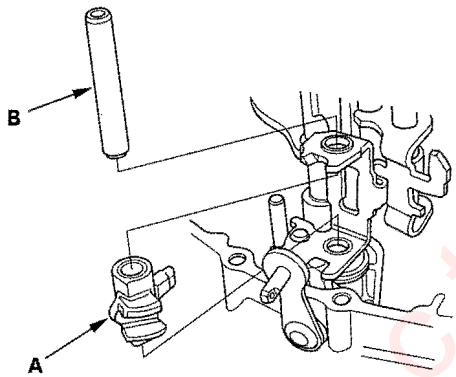

10. Install the 33 mm spring washer (A), Note the installation direction of the spring washer.

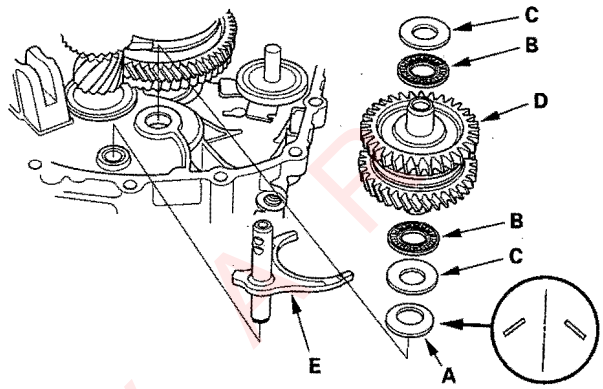

11. Install the 20 mm thrust needle bearing (B), 20 mm thrust washers (C), reverse idler gear shaft assembly (D), and reverse shift fork (E) as an assembly.

12. Slide the reverse idler gear shaft assembly (A) on the rib (B) of clutch housing, then install it into the hole (C) of the clutch housing.

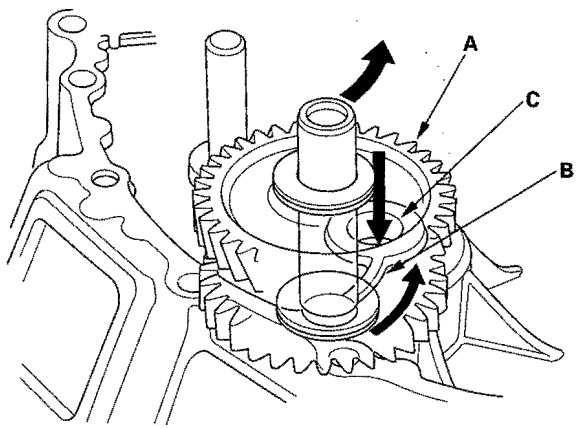

(cont'd)

Protected by MP

Transmission Reassembly (cont'd)

13. Install the reverse shift lever (A), and pin (B).

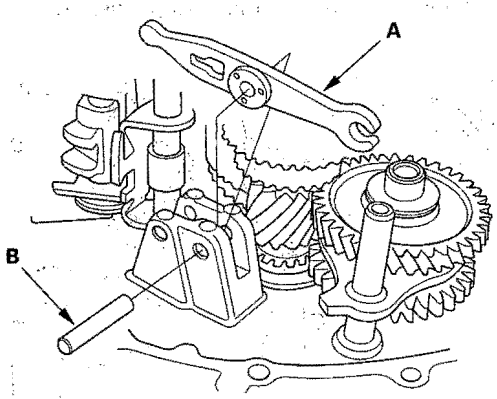

14. Install the oil guide pipe A, oil guide pipe (B), and magnet (C).

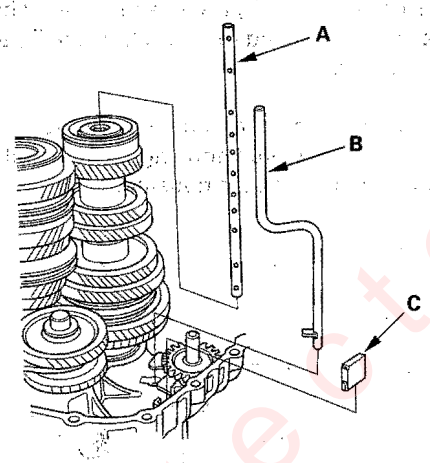

15. Remove any dirt or oil from the transmission housing sealing surface. Apply liquid gasket (P/N 08718-0001) to the sealing surface. Make sure you seal the entire circumference of the bolt holes to prevent oil leakage.

NOTE: If 4 minutes have passed after applying liquid gasket, reapply it, and assemble the housings. Allow it to cure at least 20 minutes after assembly before filling the transmission with oil.

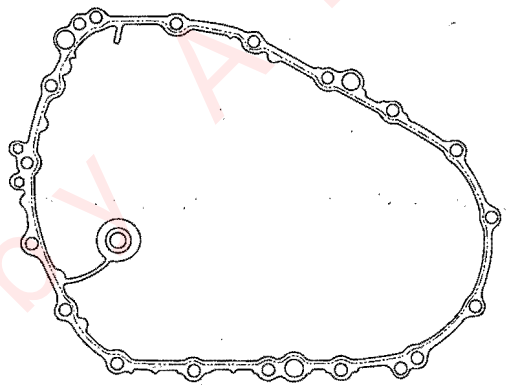

Protected by A

16. Install the 14 x 20 mm dowel pins (A).

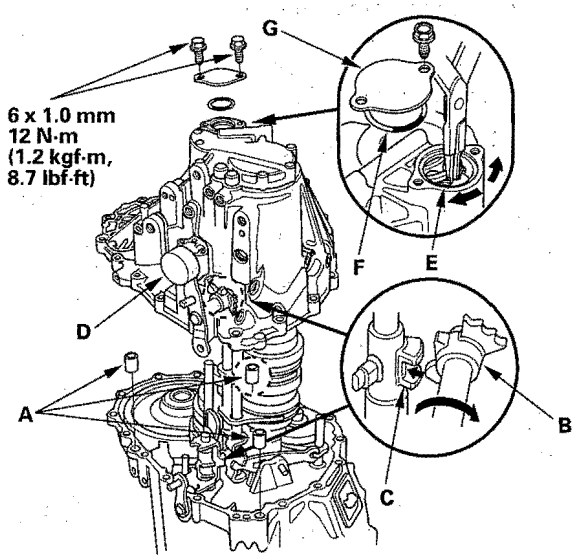

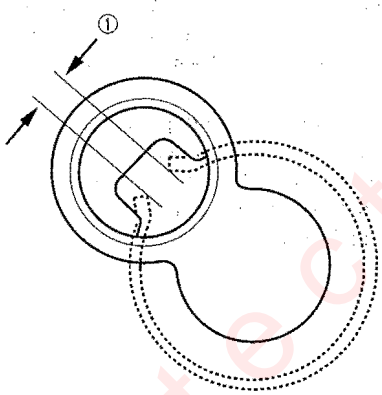

17. Lower the transmission housing, then place the shift arm (B) in the groove of the shift piece (C) by turning the change lever (D).

18. Lower the transmission housing the rest of the way as you expand the 75 mm snap ring (E). Release the snap ring so it seats in the groove of the countershaft bearing.

19. Check that the 75 mm snap ring is securely seated in the groove of the countershaft bearing.

Dimension ① as installed: 9.91—11.52 mm (0.390—0.454 in.)

20. Install the new 37.7 mm O-ring (F) and transmission case cap (G).

NOTE: Check the operation of the change lever.

21. Install the transmission hanger (A), transmission hanger (B), 8 mm flange bolt (C), and the 10 mm flange bolts finger-tight.

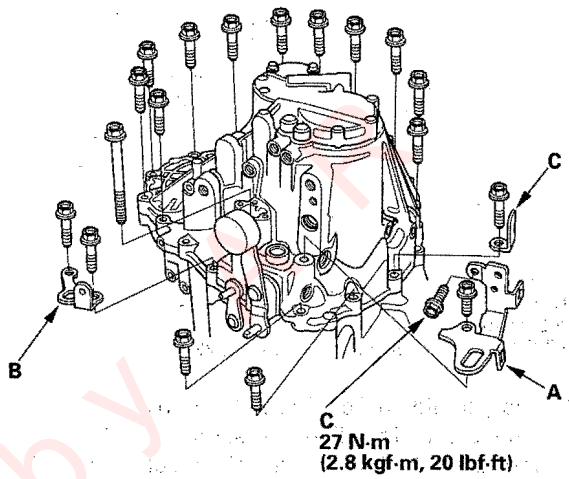

22. Tighten the 10 mm flange bolts in a crisscross pattern in several steps.

10 x 1.25 mm: 44 N·m (4.5 kgf·m, 33 lbf·ft)

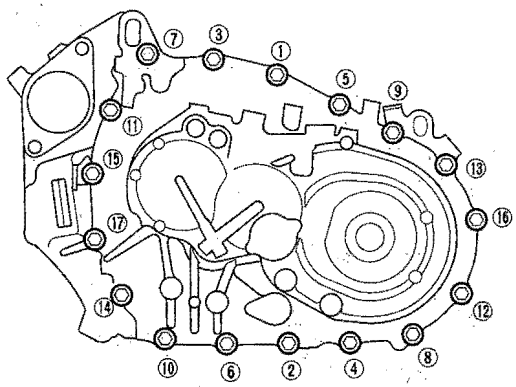

(cont'd)

Transmission Reassembly (cont'd)

23. Install the oil check bolt (A), new 6 mm washer (B), drain plug (C), and new 14 mm washer (D).

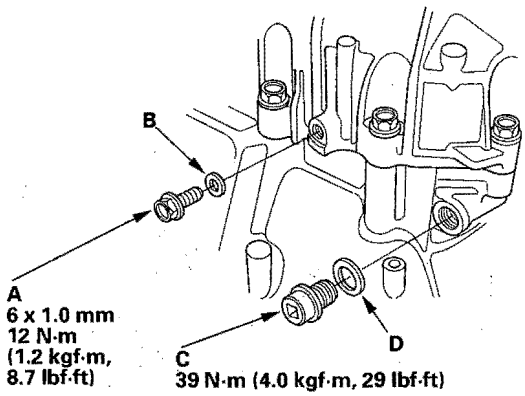

24. Apply liquid gasket (P/N 08718-0001) to the set screws, then install the set screws (A), 22 mm spring (B), 27.4 mm spring (C), steel balls (D), input shaft (mainshaft) speed sensor (E), output shaft (countershaft) speed sensor (F), and new O-rings (G).

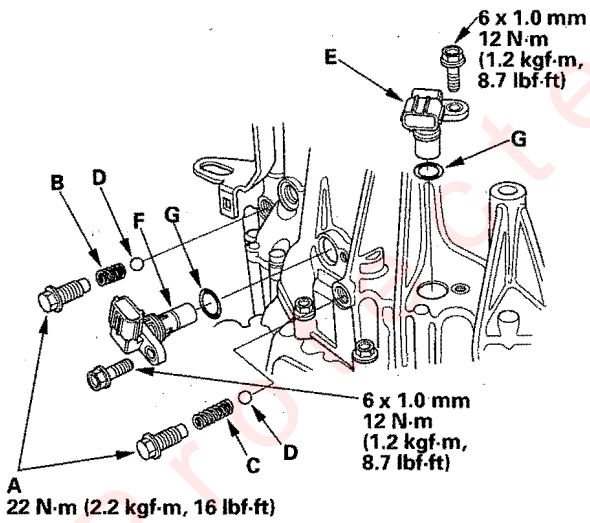

25. Apply liquid gasket (P/N 08718-0001) to the set screws, then install the set screws (A), 22.0 mm spring (B), 26.1 mm spring (C), 27.4 mm springs (D), steel balls (E), oil filler plug (F), washer (G), and clutch pipe bracket (H).

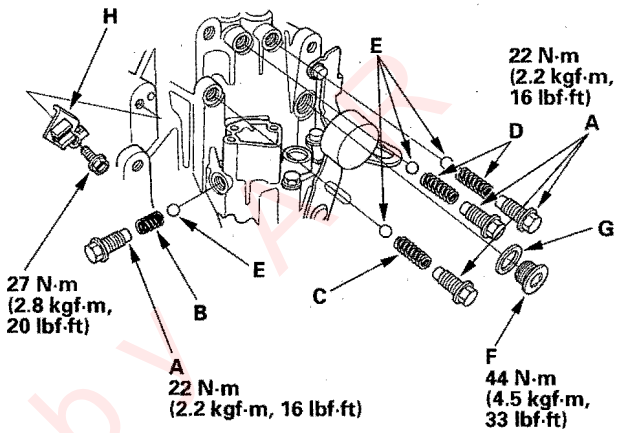

26. Remove any dirt or oil from the reverse lockout solenoid sealing surface. Apply liquid gasket (P/N 08718-0001) to the sealing surface.

NOTE: If 4 minutes have passed after applying liquid gasket, reapply it, and install the reverse lockout solenoid. Allow it to cure at least 20 minutes after assembly before filling the transmission with oil.

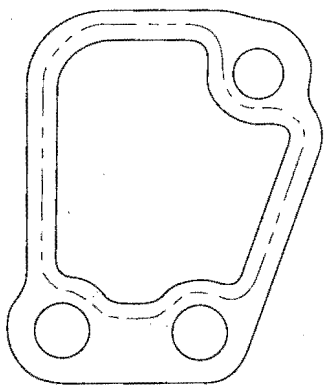

Protected by AR

27. Install the transmission harness stay (A) and the reverse lockout solenoid (B).

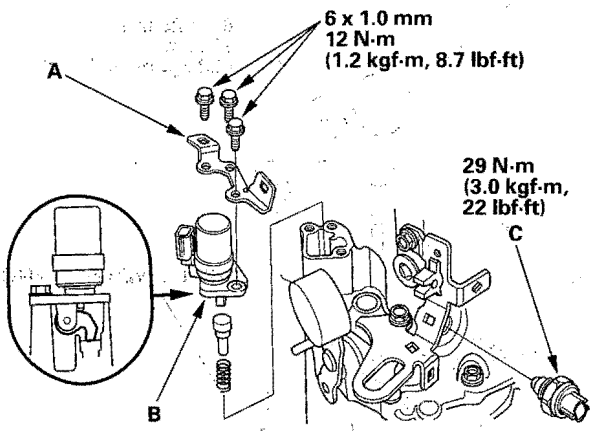

28. Apply liquid gasket (P/N 08718-0001) to the threads of the back-up light switch (C), and install the switch in the transmission housing.

29. Install the strainer cover (A), new O-ring (B), strainer set spring (C), and oil pump strainer (D).

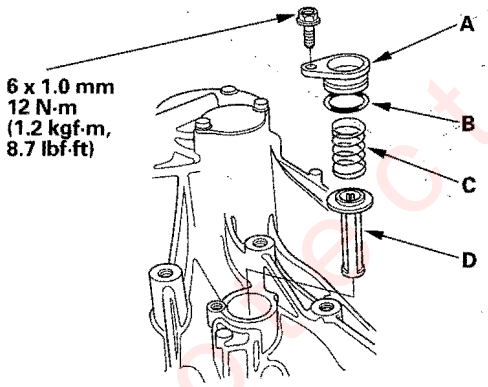

Protected by AR

Gearshift Mechanism Replacement

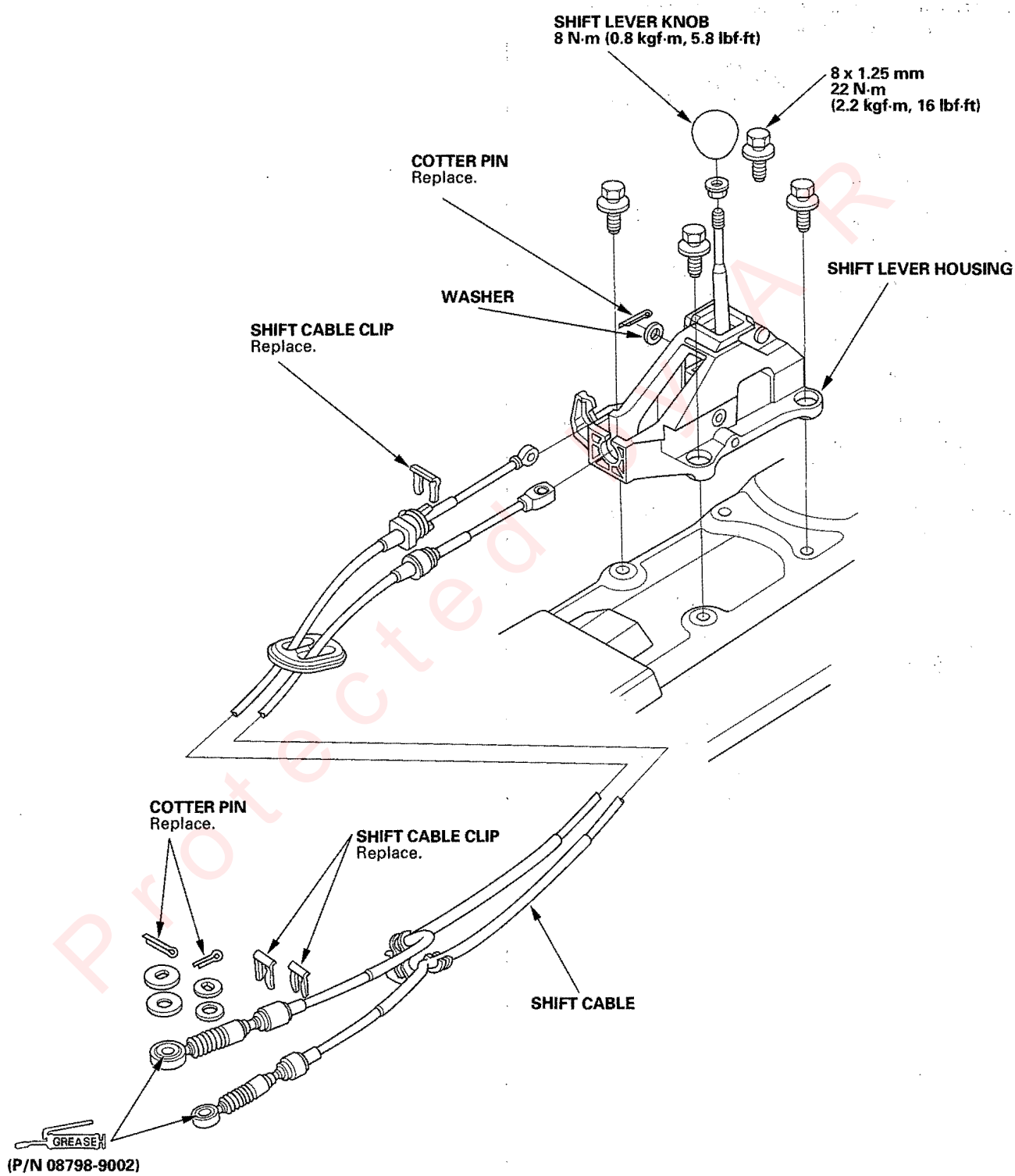

Protected by KAR

Shift Lever Housing Replacement

1. Remove the rear center console (see page 20-77).
2. Remove the center console panel (see page20-78).
3. Remove the shift lever bracket (A) and center console duct (B).

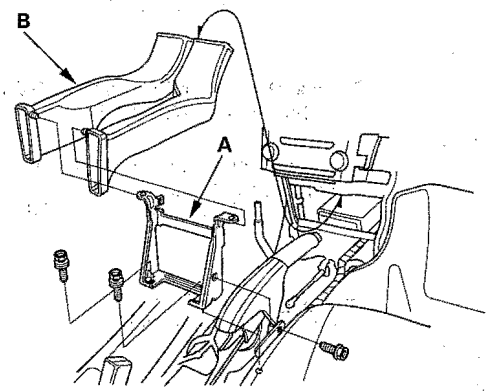

4. Remove the harness clips (A).

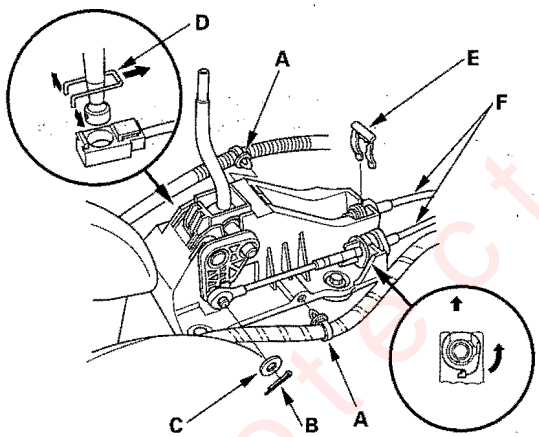

5. Remove the cotter pin (B), washer (C) and clamp (D).
6. Remove the shift cable clip (E).
7. Remove the select cable and shift cable (F) as shown.
8. Remove the shift lever housing.

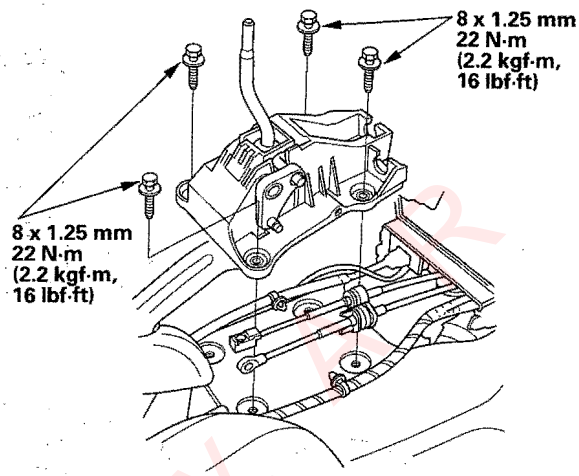

9. Install the shift lever housing in the reverse order of removal.
10. Install the center console panel (see page 20-78).
11. Install the rear center console (see page 20-78).

Protected by BR

Component Location Index

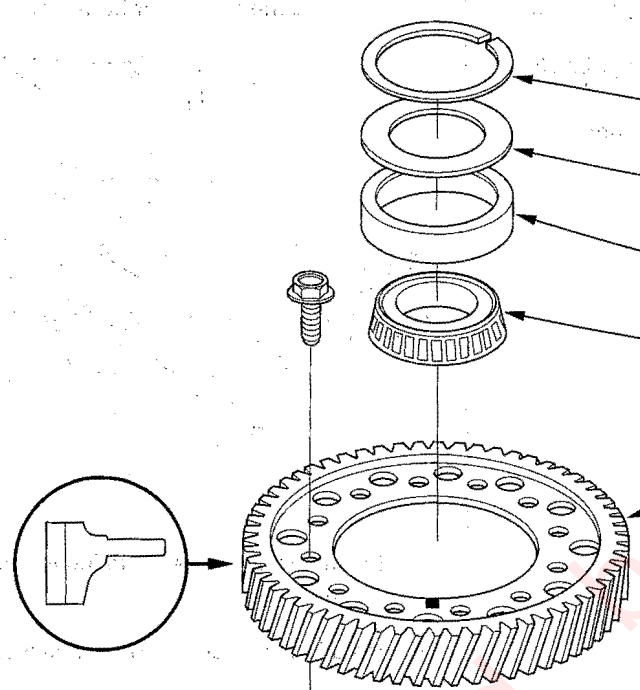

81 mm SHIM

46 x 81 x 1 mm SPACER

45 x 81 x 18 mm BEARING OUTER RACE
Replacement, page 13-82

45 x 81 x 18 mm CARRIER BEARING
Replacement, page 13-80
Preload Adjustment, page 13-83

FINAL DRIVEN GEAR
Replacement, page 13-80

DIFFERENTIAL CARRIER
Limited Slip Differential Check, page 13-79
Replacement, page 13-80

45 x 80 x 21 mm CARRIER BEARING
Replacement, page 13-80
Preload Adjustment, page 13-83

45 x 80 x 21 mm BEARING OUTER RACE
Replacement, page 13-82

46 x 80 x 1 mm SPACER

Protected by AR

Limited Slip Differential Check

Operational Check

NOTE: The helical type limited slip differential (LSD) distributes optimum power between the two driving axles according to the difference in torque as demanded by the driving wheels. Under no circumstances should the engine be started with either wheel raised off the ground, such as when adjusting wheel balance or when transporting the vehicle in the event of an accident.

1. Set the parking brake, and block the rear wheels.
2. Raise the front of the vehicle, and support it with safety stands in the proper locations (see page 1-7).
3. With the ignition switch turned OFF, shift the transmission into 1st gear.
4. Rotate either front wheel by hand, and check that the other wheel rotates in the opposite direction.
5. If the opposite front wheel does not rotate, or if you cannot spin the front wheels at all, the limited slip differential is faulty and should be replaced.

Rotating Torque Check

1. Set parking brake, and block the rear wheels.
2. Raise the front of the vehicle, and support it with safety stands in the proper locations (see page 1-7).
3. With the ignition switch turned OFF, shift the transmission into Neutral.
4. Measure the rotating torque with a beam—type torque wrench in the direction shown. Rotate the torque wrench more than two complete turns, and take the maximum reading.

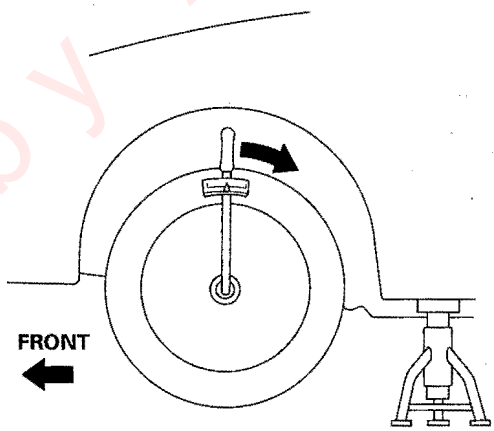

5. Shift the transmission into 1st gear, and measure the rotating torque again.
6. Calculate the rotating torque.

Service Limit:

$$\frac{\text{Measurement from step 5}}{\text{Measurement from step 4}} \geqq 2.5$$

For example:

$$\frac{7.8\ \text{N·m (0.8 kgf·m)}}{2.9\ \text{N·m (0.3 kgf·m)}} = 2.67 > 2.5$$

7. Repeat steps 3 through 6 for the other wheel.
8. Replace the limited slip differential assembly if the rotating torque is lower than the service limit.

Protected by AR

Differential Carrier, Final Driven Gear Replacement

NOTE: Prior to reassembling, clean all the parts in solvent, dry them, and apply lubricant to all contact surfaces.

1. Remove the bolts in a crisscross pattern in several steps, then remove the final driven gear (A) from the differential carrier (B).

   NOTE: Inspect the final driven gear surface for wear and damage.

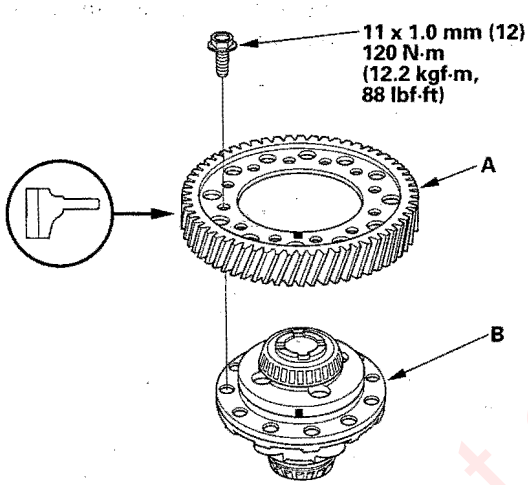

2. Install the final driven gear with the chamfer on the inside diameter facing the carrier. Tighten the bolts in a crisscross pattern in several steps.

Carrier Bearing Replacement

Special Tool Required
Installer, 46 mm I.D. 07PAF-0030100

1. Check the carrier bearings for wear and rough rotation. If they rotate smoothly and their rollers show no signs of wear, the bearings are OK.

2. Remove the carrier bearing (A) with a commercially-available bearing puller (B).

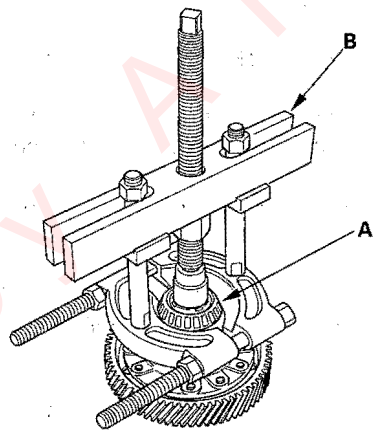

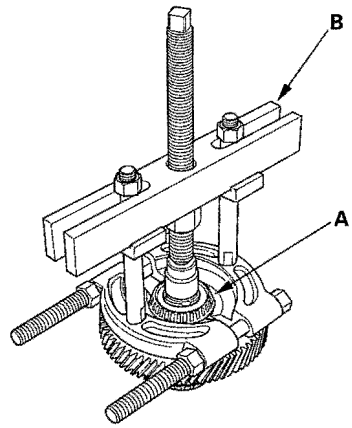

Protected by AP

3. Install the new bearings with the special tool and a press. Press each bearing on until it bottoms out. There should be no clearance between the bearings and the carrier.

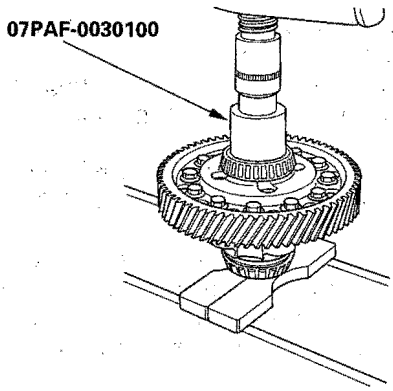

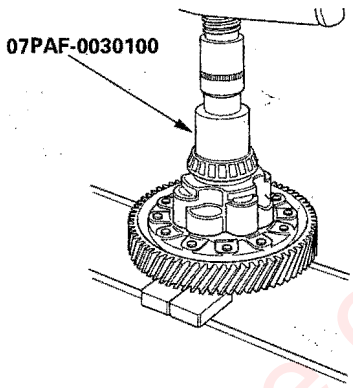

Oil Seal Replacement

Special Tools Required
- Driver 07749-0010000
- Oil seal driver attachment 07NAD-P20A100

1. Remove the differential assembly.
2. Remove the oil seal (A) from the transmission housing (B).

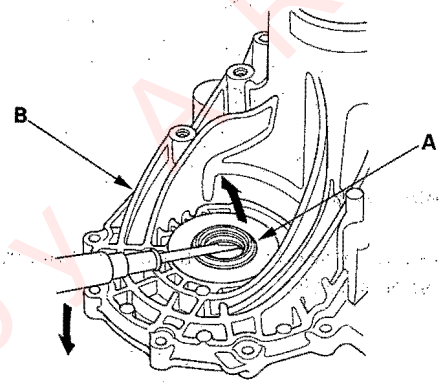

3. Remove the oil seal (A) from the clutch housing (B).

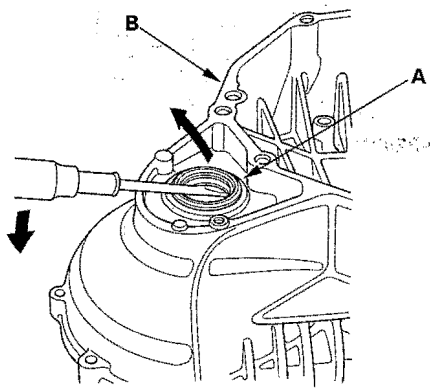

Protected by AR

(cont'd)

Oil Seal Replacement (cont'd)

4. Install the new oil seal in the transmission housing with the special tools.

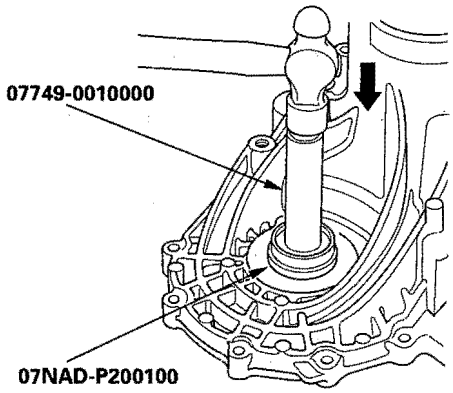

5. Install the new oil seal in the clutch housing with the special tools.

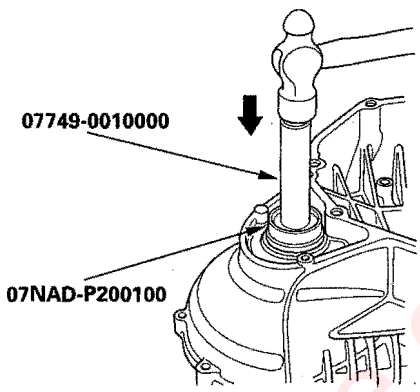

Bearing Outer Race Replacement

Special Tools Required
- Driver 07749-0010000
- Attachment, 78 x 80 mm 07NAD-PX40100

NOTE:
- The bearing outer race and tapered roller bearing should be replaced as a set.
- Inspect and adjust the tapered roller bearing preload whenever the tapered roller bearing is replaced.

1. Remove the oil seals from the transmission housing and clutch housing (see page 13-81).

2. Remove the bearing outer race, spacer, and 81 mm shim from the transmission housing and clutch housing by heating about 212°F (100°C) with a heat gun. Do not reuse the thrust shim if the outer race was driven out.

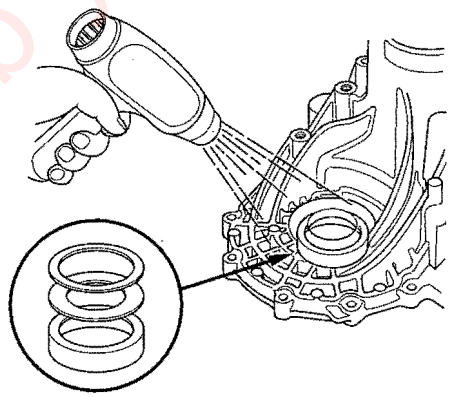

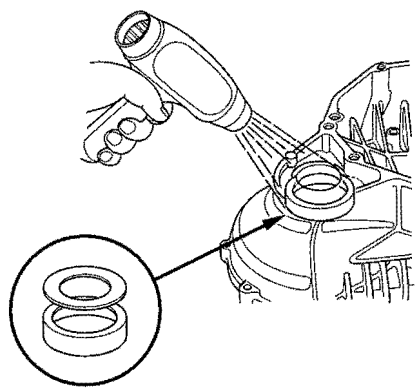

Protected by A R

3. Install the 81 mm shim (A), spacer (B), and bearing outer race (C) into the transmission housing (D) using the special tools.

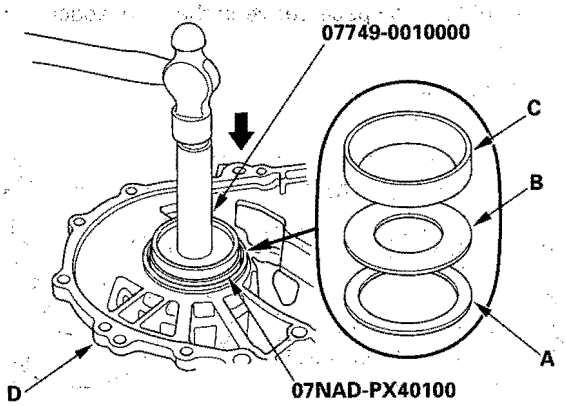

4. Install the spacer (A), and bearing outer race (B) into the clutch housing (C) using the special tools.

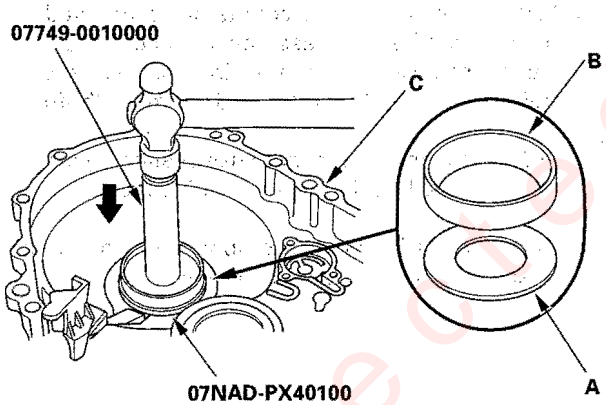

5. Install the oil seals into the transmission housing and clutch housing (see page 13-81).

Special Tools Required
- Driver 07749-0010000
- Attachment, 78 x 80 mm 07NAD-PX40100
- Preload inspection tool 07XAJ-S0KA100

If any of the items listed below were replaced, the carrier bearing preload must be adjusted.

- Transmission housing
- Clutch housing
- Differential carrier
- Spacer
- Carrier bearing and outer race

1. Remove the oil seals from the transmission housing and clutch housing (see page 13-81).

2. If you replaced the carrier bearing on the transmission housing side of the carrier, remove and discard the bearing outer race. Heat up the transmission housing to about 212°F (100°C) with a heat gun (A), then remove the bearing outer race (B), spacer (C), and 81 mm shim (D). Do not heat the housing in excess of 212°F (100°C).

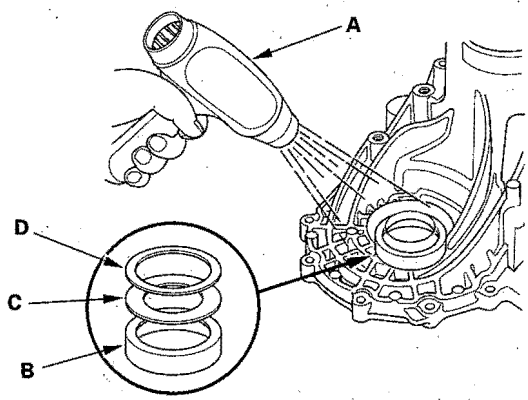

(cont'd)

Carrier Bearing Preload Adjustment (cont'd)

3. If you replaced the carrier bearing on the clutch housing side of the carrier, remove and discard the beaing outer race, Heat up the clutch housing to about 212°F (100°C) with a heat gun (A), then remove the bearing outer race (B) and spacer (C). Do not heat the housing in excess of 212°F (100°C).

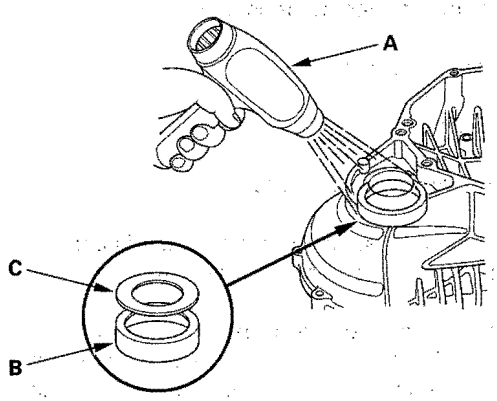

4. Install the 81 mm shim (A), spacer (B), and bearing outer race (C) in the transmission housing by using the special tools. (Use a new race if you replaced the bearing.) There should be no space between the race, spacer, and housing.

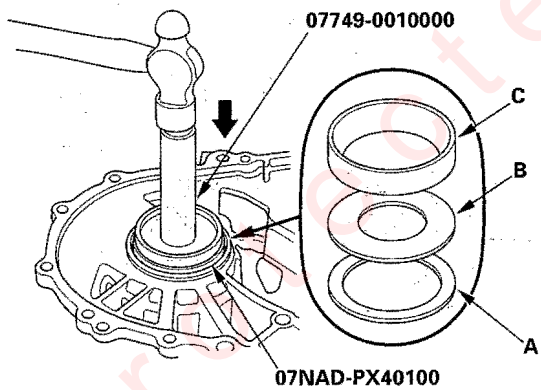

5. If you removed the bearing outer race from the clutch housing, use the special tools to install a new bearing outer race (A) and spacer (B). There should be no space between the race, spacer, and housing.

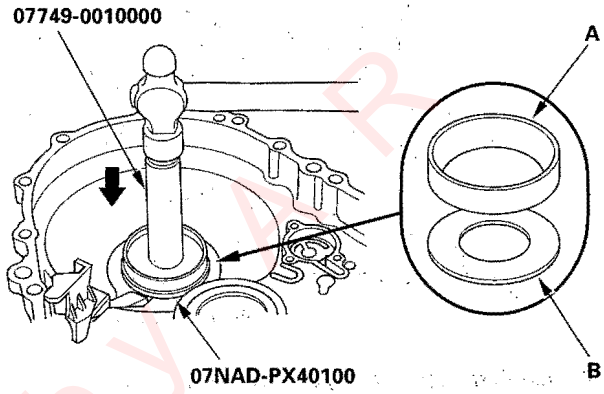

6. With the mainshaft and countershaft removed, install the differential assembly, and bolt the transmission and clutch housing together, and tighten the bolts to 44 N·m (4.5 kgf·m, 33 lbf·ft).

   NOTE: It is not necessary to use sealing agent between the housings for this adjustment.

7. Rotate the differential assembly in both directions to seat the tapered roller bearings.

Protected by AR

8. At normal room temperature, measure the starting torque of the differential assembly by rotating it in both directions with the special tool and a torque wrench (A).

Standard: 3.43—4.51 N·m (35—46 kgf·cm, 30—40 lbf·in.)

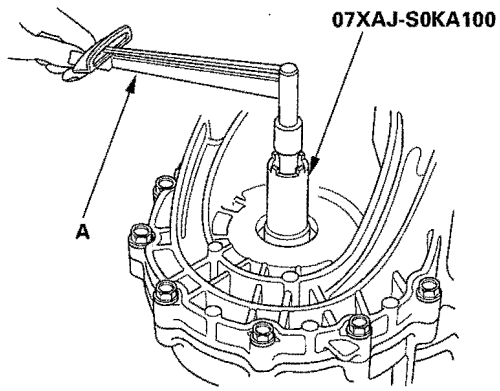

9. If the carrier bearing preload is not within the standard, select a 81 mm thrust shim that will provide the correct preload:

- Compare the bearing preload you got on the first try with the specified preload of 3.43—4.51 N·m (35—46 kgf·cm, 30—40 lbf·in.).
- If the preload you measure was less than specified, subtract it from the specified preload.
- If the preload you measure was more than specified, subtract it from the specified preload.

For example, with a 2.50 mm (0.098 in.) thrust shim:

① specified	4.51 N·m (46 kgf·cm, 40 lbf·in.)
— you got less	2.55 N·m (26 kgf·cm, 23 lbf·in.)
	1.96 N·m (20 kgf·cm, 17 lbf·in.) less

② you got more	5.29 N·m (54 kgf·cm, 47 lbf·in.)
— specified	4.51 N·m (46 kgf·cm, 40 lbf·in.)
	0.78 N·m (8 kgf·cm, 7 lbf·in.) more

NOTE: Each shim size up or down from standard makes about 0.3—0.4 N·m (3—4 kgf·cm, 2.6—3.5 lbf·in.) difference in preload.

In example ①, your preload was 1.96 N·m (20 kgf·cm, 17 lbf·in.) less than standard, so you need a thrust shim five sizes thicker than standard (try the 2.65 mm (0.104 in.) 81 mm thrust shim, and recheck).

In example ②, your preload was 0.78 N·m (8 kgf·cm, 7 lbf·in.) more than standard, so you need a thrust shim two sizes thinner (try the 2.44 mm (0.096 in.) 81 mm thrust shim, and recheck).

81 mm Shim

	Part Number	Thickness
A	41438-PYZ-000	2.05 mm (0.081 in.)
B	41439-PYZ-000	2.08 mm (0.082 in.)
C	41440-PYZ-000	2.11 mm (0.083 in.)
D	41441-PYZ-000	2.14 mm (0.084 in.)
E	41442-PYZ-000	2.17 mm (0.085 in.)
F	41443-PYZ-000	2.20 mm (0.087 in.)
G	41444-PYZ-000	2.23 mm (0.088 in.)
H	41445-PYZ-000	2.26 mm (0.089 in.)
J	41446-PYZ-000	2.29 mm (0.090 in.)
K	41447-PYZ-000	2.32 mm (0.091 in.)
L	41448-PYZ-000	2.35 mm (0.093 in.)
M	41449-PYZ-000	2.38 mm (0.094 in.)
N	41450-PYZ-000	2.41 mm (0.095 in.)
P	41451-PYZ-000	2.44 mm (0.096 in.)
Q	41452-PYZ-000	2.47 mm (0.097 in.)
R	41453-PYZ-000	2.50 mm (0.098 in.)
S	41454-PYZ-000	2.53 mm (0.100 in.)
T	41455-PYZ-000	2.56 mm (0.101 in.)
U	41456-PYZ-000	2.59 mm (0.102 in.)
V	41457-PYZ-000	2.62 mm (0.103 in.)
W	41458-PYZ-000	2.65 mm (0.104 in.)
X	41459-PYZ-000	2.68 mm (0.106 in.)
Y	41460-PYZ-000	2.71 mm (0.107 in.)
Z	41461-PYZ-000	2.74 mm (0.108 in.)
AA	41462-PYZ-000	2.77 mm (0.109 in.)
AB	41463-PYZ-000	2.80 mm (0.110 in.)
AC	41464-PYZ-000	2.83 mm (0.111 in.)
AD	41465-PYZ-000	2.86 mm (0.113 in.)
AE	41466-PYZ-000	2.89 mm (0.114 in.)
AF	41467-PYZ-000	2.92 mm (0.115 in.)
AG	41468-PYZ-000	2.95 mm (0.116 in.)
AH	41469-PYZ-000	2.98 mm (0.117 in.)
AJ	41470-PYZ-000	3.01 mm (0.119 in.)
AK	41471-PYZ-000	3.04 mm (0.120 in.)
AL	41472-PYZ-000	3.07 mm (0.121 in.)
AM	41473-PYZ-000	3.10 mm (0.122 in.)
AN	41474-PYZ-000	3.13 mm (0.123 in.)
AP	41475-PYZ-000	3.16 mm (0.124 in.)

(cont'd)

Carrier Bearing Preload Adjustment (cont'd)

10. Once the carrier bearing preload is correct, disassemble the transmission housing, and install new oil seals in the differential (see page 13-81).
11. Reassemble the transmission (see page 13-69).
12. Reinstall the transmission (see page 13-22).

Protected by A R

SUPPLEMENTAL RESTRAINT SYSTEM (SRS) (If automatic transmission maintenance required)

The Acura TL SRS includes a driver's airbag in the steering wheel hub, a passenger's airbag in the dashboard above the glove box, seat belt tensioners in the front seat belt retractors, side curtain airbags in the sides of the roof, and side airbags in the front seat-backs. Information necessary to safely service the SRS is included in this Service Manual. Items marked with an asterisk (*) on the contents page include or are located near SRS components. Servicing, disassembling, or replacing these items requires special precautions and tools, and should be done only by an authorized Acura dealer.

- To avoid rendering the SRS inoperative, which could lead to personal injury or death in the event of a severe frontal collision, all SRS service work must be performed by an authorized Acura dealer.
- Improper service procedures, including incorrect removal and installation of the SRS, could lead to personal injury caused by unintentional deployment of the airbags and/or side airbags.
- Do not bump or impact the SRS unit, front impact sensors, side impact sensors whenever the ignition switch is ON (II), or for at least 3 minutes after the ignition switch is turned OFF. Otherwise, the system may fail in a collision, or airbags may deploy.
- SRS electrical connectors are identified by yellow color coding. Related components are located in the steering column, front console, dashboard, dashboard lower panel, in the dashboard above the glove box, in the front seats, in the roof side, and around the floor. Do not use electrical test equipment on these circuits.



Protected by A R

Automatic Transmission

Automatic Transmission

Special Tools 14-2
General Troubleshooting Information 14-3
DTC Troubleshooting Index 14-8
Symptom Troubleshooting Index 14-10
System Description 14-20
DTC Troubleshooting 14-80
Road Test 14-174
Stall Speed Test 14-176
Pressure Test 14-177
Shift Solenoid Valve A
  Test 14-180
  Replacement 14-181
Shift Solenoid Valve B
  Test 14-182
  Replacement 14-183
Shift Solenoid Valve C
  Test 14-184
  Replacement 14-185
Torque Converter Clutch Solenoid Valve
  Test 14-186
  Replacement 14-187
A/T Clutch Pressure Control Solenoid Valve
  Solenoid Valve A Test 14-188
  Solenoid Valve A Replacement 14-191
  Solenoid Valve B Test 14-188
  Solenoid Valve B Replacement 14-191
  Solenoid Valve C Test 14-192
  Solenoid Valve C Replacement 14-194
Input Shaft (Mainshaft) Speed Sensor
  Replacement 14-195
Output Shaft (Countershaft) Speed Sensor
  Replacement 14-196
3rd Clutch Transmission Fluid
  Pressure Switch Replacement 14-197
4th Clutch Transmission Fluid
  Pressure Switch Replacement 14-198
ATF Temperature Sensor Replacement ... 14-199
Transmission Gear Selection Switch
  Test 14-202
  Replacement 14-202
ATF Level Check 14-203
ATF Replacement 14-204
Transmission Removal 14-205
Drive Plate Removal and Installation 14-216
Transmission Installation 14-217
Shift Lever Removal 14-228
Shift Lever Installation 14-229
Shift Lever Disassembly and Reassembly 14-231
Shift Cable Replacement 14-232
Shift Cable Adjustment 14-235

A/T Gear Position Indicator

Component Location Index 14-237
Circuit Diagram 14-238
Indicator Circuit Troubleshooting 14-239
Transmission Range Switch Test 14-240
Transmission Range Switch Replacement 14-242

A/T Interlock System

Component Location Index 14-244
Circuit Diagram 14-245
Shift Lock System/Reverse Lock System Circuit Troubleshooting 14-246
* Key Interlock System Circuit Troubleshooting 14-248
* Key Interlock Solenoid Test 14-249
Shift Lock Solenoid Test 14-250
Shift Lock Solenoid Replacement 14-250
Park Pin Switch Test 14-251
Park Pin Switch Replacement 14-251

Protected by AR

Transmission End Cover

End Cover, 3rd Gear, Idler Gear, and 3rd Clutch Removal 14-252
Park Lever Stop Inspection and Adjustment 14-254
Control Shaft Oil Seal Replacement 14-255
Control Shaft Bearing Replacement 14-255
ATF Feed Pipe Replacement 14-256
End Cover, 3rd Gear, Idler Gear, and 3rd Clutch Installation 14-303

Transmission Housing

Housing and Shaft Assembly Removal 14-257
Bearing Removal and Installation 14-259
Shaft Assembly and Housing Installation 14-300

Valve Body

Valve Body and ATF Strainer Removal 14-260
Valve Body Repair 14-262
Valve Body Valve Installation 14-263
Main Valve Body Disassembly, Inspection, and Reassembly 14-264
ATF Pump Inspection 14-265
Regulator Valve Body Disassembly, Inspection, and Reassembly 14-266
Servo Body Disassembly, Inspection, and Reassembly 14-267
Top Accumulator Body Disassembly, Inspection, and Reassembly 14-268
Accumulator Body Disassembly, Inspection, and Reassembly 14-269
3rd Accumulator and End Cover Disassembly, Inspection, and Reassembly 14-270
Valve Body and ATF Strainer Installation 14-298

Torque Converter Housing

Mainshaft Bearing and Oil Seal Replacement 14-271
Countershaft Bearing Replacement 14-272
Secondary Shaft Bearing Replacement ... 14-272
Control Shaft Oil Seal Replacement 14-273

Shafts and Clutches

Mainshaft Disassembly, Inspection, and Reassembly 14-274
4th/5th Clutch Clearance Inspection 14-275
Mainshaft Sealing Ring Replacement 14-276
Countershaft Disassembly, Inspection, and Reassembly 14-277
Countershaft Reverse Selector Hub and 4th Gear Removal 14-278
Countershaft 4th Gear and Reverse Selector Hub Installation 14-279
3rd Clutch Ball Bearing Replacement 14-280
Secondary Shaft Disassembly, Inspection, and Reassembly 14-281
Secondary Shaft Clearance Inspection 14-282
Secondary Shaft Idler Gear Bearing Replacement 14-284
1st Gear One-way Clutch Inspection 14-285
1st Clutch Hub Replacement 14-285
Clutch Disassembly 14-286
Clutch Inspection 14-289
Clutch Reassembly 14-292

A/T Differential

Component Location Index 14-311
Backlash Inspection 14-311
Differential Carrier, Final Driven Gear Replacement 14-312
Carrier Bearing Replacement 14-312
Oil Seal Replacement 14-313
Carrier Bearing Outer Race Replacement 14-314
Carrier Bearing Preload Inspection 14-315



Protected by

Special Tools

Ref. No.	Tool Number	Description	Qty
①	07GAB-PF50101 or 07GAB-PF50100	Mainshaft Holder	1
②	07GAD-PG40101 or 07GAD-PG40100	Seal Driver Attachment	1
③	07GAD-SD40101	Attachment, 78 x 90 mm	1
④	07GAE-PG40200 or 07GAE-PG4020A	Clutch Spring Compressor Bolt Assembly	1
⑤	07HAC-PK40102	Housing Puller	1
⑥	07HAJ-PK40201	Preload Inspection Tool	1
⑦	07JAD-PH80101	Oil Seal Driver Attachment	1
⑧	07LAD-PW50601	Attachment, 40 x 50 mm	1
⑨	07LAE-PX40100	Clutch Spring Compressor Attachment	2
⑩	07MAJ-PY4011A	A/T Pressure Hose, 2,210 mm	4
⑪	07MAJ-PY40120	A/T Pressure Hose Adapter	4
⑫	07NAD-PX40100	Attachment, 78 x 80 mm	1
⑬	07ZAE-PRP0100	Clutch Compressor Attachment	1
⑭	07406-0020400 or 07406-0020401	A/T Oil Pressure Gauge Set w/Panel	1
⑮	07736-A01000B or 07736-A01000A	Adjustable Bearing Puller, 25—40 mm	1
⑯	07746-0010500	Attachment, 62 x 68 mm	1
⑰	07746-0010600	Attachment, 72 x 75 mm	1
⑱	07746-0010800	Attachment, 22 x 24 mm	1
⑲	07746-0030100	Driver, 40 mm I.D.	1
⑳	07749-0010000	Driver	1
㉑	07947-6340500	Driver Attachment	1

⑤: If the top arm is too short, replace it with 07SAC-P0Z01001.
⑨: 07HAE-PL50101 may be used to substitute one of these tools.
⑮: Must be used with commercially available 3/8"-16 slide hammer.

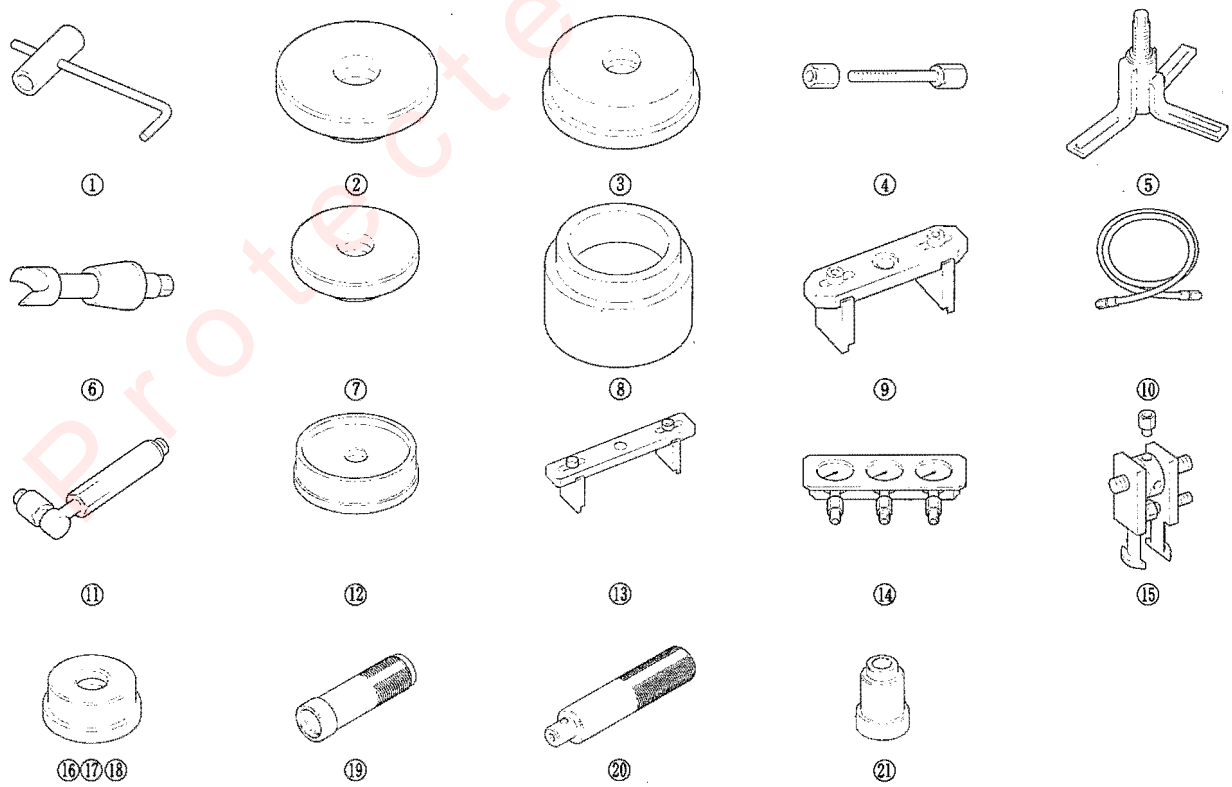

Protected by AR

General Troubleshooting Information

How to Check for DTCs with the Honda Diagnostic System

When the powertrain control module (PCM) senses an abnormality in the input or output systems, the D indicator (A) in the tachometer (B) will usually blink.

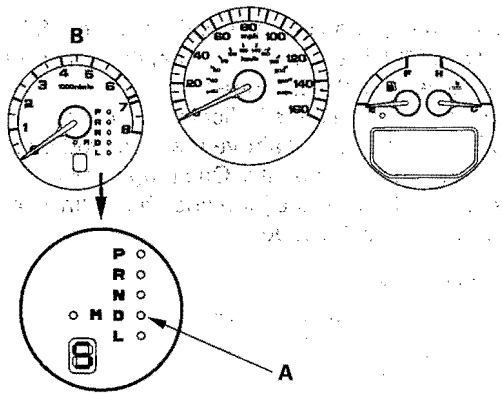

When the Honda diagnostic system (HDS) is connected to the data link connector (DLC) (A) (located under the left end of the dash), it will indicate the diagnostic trouble code (DTC) when the ignition switch is turned ON (II).

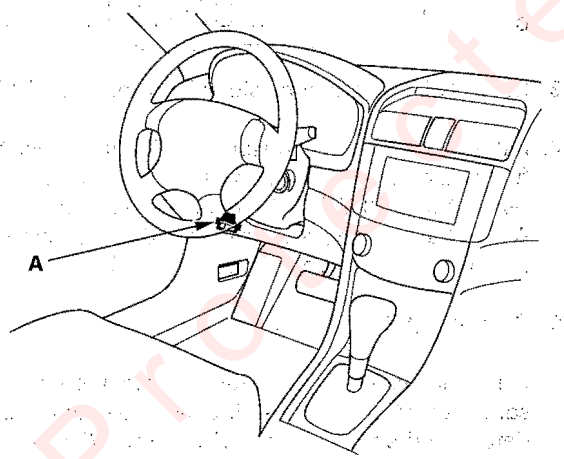

If the D indicator or malfunction indicator lamp (MIL) has been reported on, or if a driveability problem is suspected, follow this procedure:

1. Connect the HDS to the DLC. (See the HDS user's manual for specific instructions.)
2. Turn the ignition switch ON (II), select A/T system and observe the DTC in the DTCs MENU on the HDS screen.
3. Record all fuel and emissions DTCs, A/T DTCs, and freeze data.
4. If there is a fuel and emissions DTC, first check the fuel and emissions system as indicated by the DTC (except for DTC P0700, DTC P0700 means there is one or more A/T DTCs, and no problems were detected in the fuel and emissions circuit of the PCM).
5. Clear the DTC and data.
6. Drive the vehicle for several minutes under the same conditions as those indicated by the freeze data, and then recheck for a DTC. If the A/T DTC returns, go to the DTC troubleshooting index. If the DTC does not return, there was an intermittent problem within the circuit. Make sure all pins and terminals in the circuit are tight.

(cont'd)

Presented by ARS

General Troubleshooting Information (cont'd)

How to Check for DTCs with the SCS Mode (retrieving the flash codes)

When the PCM senses an abnormality in the input or output system, the D indicator (A) in the tachometer (B) will usually blink.

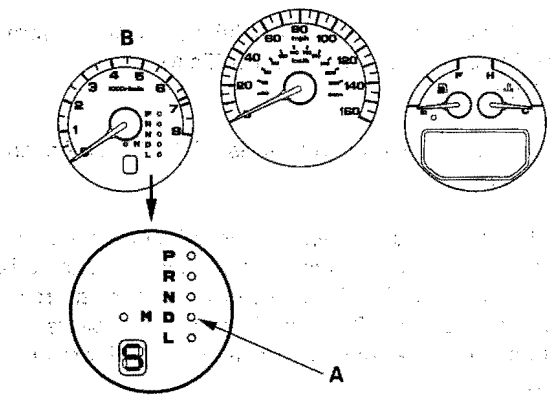

When the D indicator has been reported on, connect the HDS to the DLC (A) (located under the left end of the dash). Turn the ignition switch ON (II), from the SELECT MODE MENU select SCS mode or connect the SCS line (BRN wire) at the DLC (A) to the body ground with a jumper wire, then the D indicator will indicate (blink) the DTC.

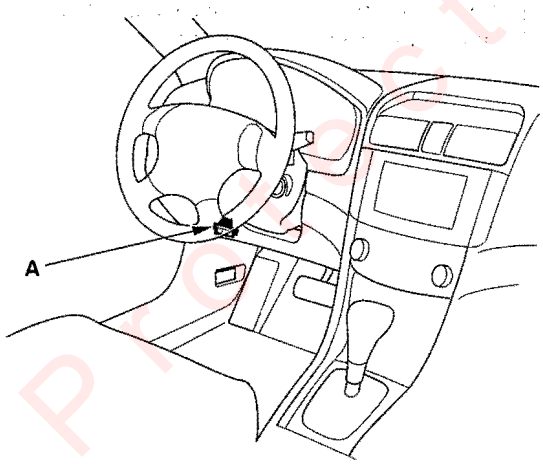

If the D indicator and the MIL come on at the same time, or if a driveability problem is suspected, follow this procedure:

1. Connect the HDS to the DLC. (See the HDS user's manual for specific instructions.)
2. Turn the ignition switch ON (II), from the SELECT MODE MENU select SCS mode, then observe the D indicator in the tachometer.
   Code 1 through 9 are indicated by individual short blinks. Code 10 and above are indicated by a series of long and short blinks. One long blink equals 10 short blinks. Add the long and short blinks together to determine the code.

Example: DTC 1-1

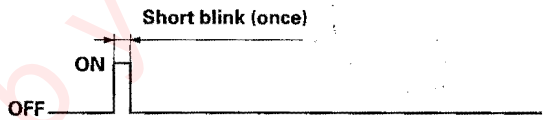

Example: DTC 15-5

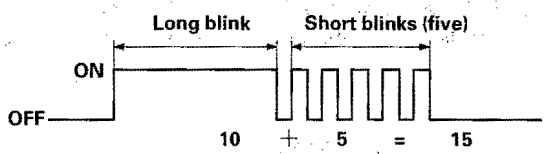

3. Record all fuel and emissions DTCs and A/T DTCs.
4. If there is a fuel and emissions DTC, first check the fuel and emissions system as indicated by the DTC (except DTC 70, DTC 70 means there is one or more A/T DTCs, and no problems were detected in the fuel and emissions circuit of the PCM).
5. Clear the DTC and data.
6. Drive the vehicle for several minutes under the same conditions as those indicated by the freeze data, and then recheck for DTC. If the A/T DTC returns, go to the DTC Troubleshooting index. If the DTC does not return, there was an intermittent problem within the circuit. Make sure all pins and terminals in the circuit are tight.

Protected by

How to Troubleshoot Circuits at the PCM

Special Tools Required
Backprobe set 07SAZ-001000A (two required)

1. Pull back the carpet, and remove the passenger's center lower cover and rear vent duct (see step 5 on page 20-90).

2. Inspect the circuit on the PCM, according to the DTC troubleshooting, with the special tools and a digital multimeter.

3. Connect the backprobe adapters (A) to the stacking patch cords (B), and connect the cords to a multimeter (C).

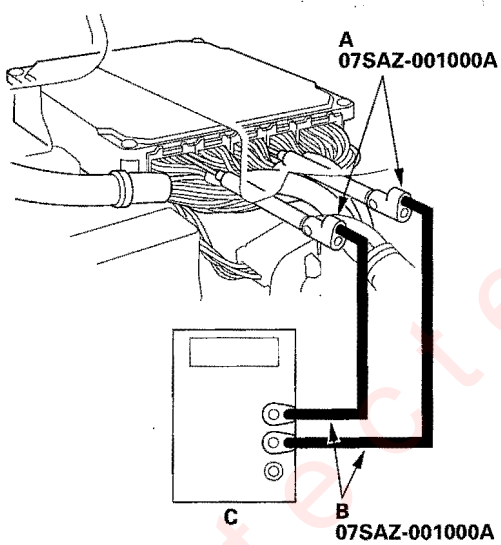

4. Using the wire insulation as a guide for the contoured tip of the backprobe adapter, gently slide the tip into the connector from the wire side until it touches the end of the wire terminal.

5. If you cannot get to the wire side of the connector or the wire side is sealed, disconnect the connector and use the tester probe to probe the connectors from the terminal side. Do not force the probe into the connector.

How to Clear A/T DTCs

1. Connect the HDS to the DLC.

2. Turn the ignition switch ON (II).

3. Clear the DTC(s) on the HDS screen.

OBD Status

The OBD Status shows the current system status of each DTC and all of the parameters. This function is used to see if the technician's repair was successfully finished. The results of diagnostic tests for the DTC are displayed as:

- PASS: On Board Diagnosis is successfully finished.
- FAILED: On Board Diagnosis has finished but failed.
- NOT COMPLETED: The On Board Diagnosis was running but is out of the Enable conditions of the DTC.

(cont'd)

Protected by AR

General Troubleshooting Information (cont'd)

PCM Updating and Substitution for Testing

Special Tools Required
Honda Interface Module (HIM) EQS05A35570

Use this procedure when you have to substitute a known-good PCM in a troubleshooting procedure. Update the PCM only if the PCM does not already have the latest software loaded.

Do not turn the ignition switch OFF while updating the PCM. If you turn the ignition switch OFF, the PCM can be damaged.

How to Update the PCM

NOTE:
- To ensure the latest program is installed, update a PCM whenever the PCM is substituted or replaced.
- You cannot update a PCM with the program it already has. It will only accept a new program.
- Before you update the PCM, make sure the vehicle's battery is fully charged.
- To prevent PCM damage, do not operate any electrical system; audio system, brakes, air conditioning, power windows, moonroof, and door locks, during the update.
- If you need to diagnose the Honda interface module (HIM) because the HIM's red (#3) light came on or was flashing during the update, leave the ignition switch in the ON (II) position when you disconnect the HIM from the DLC. This will prevent PCM damage.

1. Turn the ignition switch ON (II). Do not start the engine.
2. Connect the Honda interface module (HIM) to the DLC (A) located under the left end of the dash.

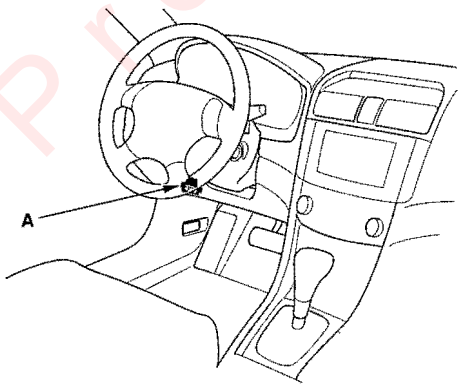

3. Update the PCM according to the procedures described on the HIM label. If the software in the PCM is the latest, replace the PCM.

How to Substitute the PCM

1. Connect the HDS to the DLC.
2. Turn the ignition switch OFF.
3. Jump the SCS line with the HDS.
4. Remove the PCM, and install a known-good PCM.
5. Rewrite the immobilizer code with the PCM replacement procedure in the HDS; this will allow you to start the engine.
6. After completing your test, reinstall the original PCM and rewrite the immobilizer code with the PCM replacement procedure in the HDS again.

Protected by A R

How to Remove and Install the PCM

1. Pull back the carpet, and remove the ducts.
2. Connect the HDS to the DLC.
3. Turn the ignition switch OFF.
4. Jump the SCS line with the HDS.
5. Disconnect PCM connectors (B).

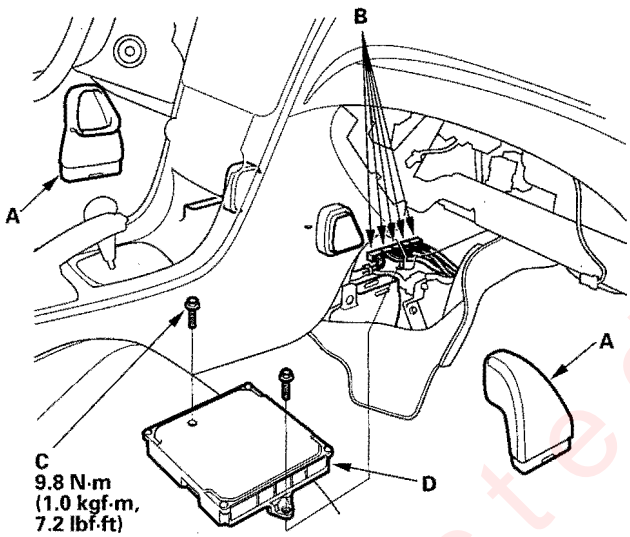

6. Remove the two bolts (C), and remove the PCM.
7. Install the PCM in the reverse order of the removal.

How to End a Troubleshooting Session

This procedure must be done after any troubleshooting.

1. Turn the ignition switch OFF.
2. Connect the HDS to the DLC.
3. Turn the ignition switch ON (II).
4. Clear the DTC(s) on the HDS screen.
5. Turn the ignition switch ON (II).
6. Start the engine in the P or N position, and warm it up to normal operating temperature (the radiator fan comes on).
7. To verify that the problem is repaired, test-drive the vehicle for several minutes at speeds over 30 mph (50 km/h) or in freeze data range.

Protected by A R

DTC Troubleshooting Index

NOTE: Record all freeze data and review General Troubleshooting Information (see page 14-3) before you troubleshoot.

DTC* (1)	D Indicator	MIL	Detection Item	Page
P0705 (5-2)* (2)	Blinks	ON	Transmission range switch (multiple shift-position input)	(see page 14-80)
P0706 (6-2)* (2)	OFF	ON	Transmission range switch (open)	(see page 14-87)
P0711 (28-5)* (2)	Blinks	OFF	ATF temperature sensor (range/performance)	(see page 14-89)
P0712 (28-3)* (2)	Blinks	OFF	ATF temperature sensor (short)	(see page 14-90)
P0713 (28-4)* (2)	Blinks	OFF	ATF temperature sensor (open)	(see page 14-91)
P0716 (15-5)* (2)	Blinks	ON	Input shaft (mainshaft) speed sensor (range/performance)	(see page 14-93)
P0717 (15-3)* (2)	Blinks	ON	Input shaft (mainshaft) speed sensor (no signal input)	(see page 14-97)
P0718 (15-6)* (2)	Blinks	ON	Input shaft (mainshaft) speed sensor (intermittent failure)	(see page 14-101)
P0721 (9-5)* (2)	Blinks	ON	Output shaft (countershaft) speed sensor (range/performance)	(see page 14-103)
P0722 (9-3)* (2)	Blinks	ON	Output shaft (countershaft) speed sensor (no signal input)	(see page 14-107)
P0723 (9-6)* (2)	Blinks	ON	Output shaft (countershaft) speed sensor (intermittent failure)	(see page 14-111)
P0731 (64-1)	Blinks	OFF	1st gear incorrect ratio	(see page 14-113)
P0732 (64-2)	Blinks	OFF	2nd gear incorrect ratio	(see page 14-114)
P0733 (64-3)	Blinks	OFF	3rd gear incorrect ratio	(see page 14-115)
P0734 (64-4)	Blinks	OFF	4th gear incorrect ratio	(see page 14-116)
P0735 (64-5)	Blinks	OFF	5th gear incorrect ratio	(see page 14-117)
P0741 (40-3)	OFF	ON	Torque converter clutch circuit performance or stuck OFF	(see page 14-118)
P0746 (76-3)	Blinks	ON	A/T clutch pressure control solenoid valve A stuck OFF	(see page 14-119)
P0747 (76-4)	Blinks	ON	A/T clutch pressure control solenoid valve A stuck ON	(see page 14-120)
P0751 (70-3)	Blinks	ON	Shift solenoid valve A stuck OFF	(see page 14-121)
P0752 (70-4)	Blinks	ON	Shift solenoid valve A stuck ON	(see page 14-122)
P0756 (71-3)	Blinks	ON	Shift solenoid valve B stuck OFF	(see page 14-123)
P0757 (71-4)	Blinks	ON	Shift solenoid valve B stuck ON	(see page 14-124)
P0761 (72-3)	Blinks	ON	Shift solenoid valve C stuck OFF	(see page 14-125)
P0762 (72-4)	Blinks	ON	Shift solenoid valve C stuck ON	(see page 14-126)
P0776 (77-3)	Blinks	ON	A/T clutch pressure control solenoid valve B stuck OFF	(see page 14-127)
P0777 (77-4)	Blinks	ON	A/T clutch pressure control solenoid valve B stuck ON	(see page 14-128)
P0780 (45-1)	Blinks	ON	Shift control system	(see page 14-129)

NOTE:

* (1): The DTC in parentheses is the Honda code that you will see when you use the HDS. The first number(s) before the - (hyphen) is the flash code the D indicator indicates when the data link connector (DLC) is connected to the HDS, and the HDS in SCS mode.
* (2): This code is caused by an electrical circuit problem and cannot be caused by a mechanical problem in the transmission.

NOTE: Record all freeze data and review General Troubleshooting Information (see page 14-3) before you troubleshoot.

DTC*(1)	D Indicator	MIL	Detection Item	Page
P0815 (24-5)*(2)	Blinks	ON	Transmission gear selection switch upshift switch (short or stuck ON)	(see page 14-130)
P0816 (24-6)*(2)	Blinks	ON	Transmission gear selection switch downshift switch (short or stuck ON)	(see page 14-132)
P0847 (26-3)*(2)	Blinks	OFF	3rd clutch transmission fluid pressure switch (short or stuck ON)	(see page 14-134)
P0848 (26-4)*(2)	Blinks	OFF	3rd clutch transmission fluid pressure switch (open or stuck OFF)	(see page 14-136)
P0872 (27-3)*(2)	Blinks	OFF	4th clutch transmission fluid pressure switch (short or stuck ON)	(see page 14-138)
P0873 (27-4)*(2)	Blinks	OFF	4th clutch transmission fluid pressure switch (open or stuck OFF)	(see page 14-140)
P0957 (24-3)*(2)	Blinks	ON	Transmission gear selection switch (short or stuck ON)	(see page 14-142)
P0958 (24-4)*(2)	Blinks	ON	Transmission gear selection switch (short or stuck OFF)	(see page 14-144)
P0962 (16-3)*(2)	Blinks	ON	A/T clutch pressure control solenoid valve A (open/short)	(see page 14-146)
P0963 (16-4)*(2)	Blinks	ON	A/T clutch pressure control solenoid valve A	(see page 14-148)
P0966 (23-3)*(2)	Blinks	ON	A/T clutch pressure control solenoid valve B (open/short)	(see page 14-150)
P0967 (23-4)*(2)	Blinks	ON	A/T clutch pressure control solenoid valve B	(see page 14-152)
P0970 (29-3)*(2)	Blinks	ON	A/T clutch pressure control solenoid valve C (open/short)	(see page 14-154)
P0971 (29-4)*(2)	Blinks	ON	A/T clutch pressure control solenoid valve C	(see page 14-156)
P0973 (7-3)*(2)	Blinks	ON	Shift solenoid valve A (short)	(see page 14-158)
P0974 (7-4)*(2)	Blinks	ON	Shift solenoid valve A (open)	(see page 14-160)
P0976 (8-3)*(2)	Blinks	ON	Shift solenoid valve B (short)	(see page 14-162)
P0977 (8-4)*(2)	Blinks	ON	Shift solenoid valve B (open)	(see page 14-164)
P0979 (22-3)*(2)	Blinks	ON	Shift solenoid valve C (short)	(see page 14-166)
P0980 (22-4)*(2)	Blinks	ON	Shift solenoid valve C (open)	(see page 14-168)
P2769 (1-3)*(2)	Blinks	ON	Torque converter clutch solenoid valve circuit (short)	(see page 14-170)
P2770 (1-4)*(2)	Blinks	ON	Torque converter clutch solenoid valve circuit (open)	(see page 14-172)

NOTE:

* (1): The DTC in parentheses is the Honda code that you will see when you use the HDS. The first number(s) before the - (hyphen) is the flash code the D indicator indicates when the data link connector (DLC) is connected to the HDS, and the HDS in SCS mode.
* (2): This code is caused by an electrical circuit problem and cannot be caused by a mechanical problem in the transmission.

Protected by A R

Symptom Troubleshooting Index

These symptoms DO NOT trigger diagnostic trouble codes (DTCs) or cause the D indicator to blink. If the malfunction indicator lamp (MIL) was reported ON or the D indicator has been blinking, check for DTCs. If there is any DTC(s) found, troubleshoot the DTC(s) first. If the vehicle has one of the symptoms in the following chart, check the probable cause (s) for it, in the sequence listed, until you find the problem.

Symptom	Probable cause(s)	Notes
When you turn the ignition switch ON (II), the D indicator comes on and stays on in all shift lever positions or never comes on at all	Communication line between multiplex integrated control unit and gauge control module defective	Check the multiplex integrated control system communication line between the multiplex integrated control unit and gauge control module (see page 22-108).
M indicator does not work	Communication line between multiplex integrated control unit and gauge control module defective	Check the multiplex integrated control system communication line between the multiplex integrated control unit and gauge control module (see page 22-108).
Shift lever cannot be moved from P while you're pressing on the brake pedal	A problem in the shift lock system of the interlock system	Check the interlock system - shift lock system circuit (see page 14-246).
Shift lever cannot pass through R from N	A problem in the reverse lock system of interlock system	Check the interlock system - shift lock system/ reverse lock system circuit (see page 14-246).
Ignition switch cannot be moved from ACC (I) position to LOCK (0) position (key is pushed in, shift lever in P)	A problem in the key interlock system of the interlock system	Check the interlock system - key interlock system circuit (see page 14-248).

Protected by A R

Symptom	Probable cause(s)	Notes
Engine runs, but vehicle does not move in any gear	1. Low ATF level 2. Shift cable broken or out of adjustment 3. Shift cable worn 4. ATF pump worn or binding 5. Regulator valve stuck or spring worn 6. ATF strainer clogged 7. Mainshaft worn or damaged 8. Final gears worn or damaged 9. Transmission-to-engine assembly error 10. Axle disengaged	• Check the ATF level, and check the ATF cooler lines for leakage and loose connections. • Check for a loose shift cable at the shift lever and the transmission control shaft. • Improper alignment of ATF pump and torque converter housing may cause ATF pump seizure. The symptoms are mostly an rpm-related ticking noise or a high pitched squeak. • Check the line pressure. • Check the ATF strainer for debris. If the ATF strainer is clogged with particles of steel or aluminum, inspect the ATF pump. If the ATF pump is OK, find the damaged components that caused the debris. If no cause for contamination is found, replace the torque converter. • Inspect the differential pinion gears for wear. If the differential pinion gears are worn, replace the differential assembly, replace the ATF strainer, thoroughly clean the transmission, and flush the cooler and lines. • Be careful not to damage the torque converter housing when replacing the main ball bearing. You may also damage the ATF pump when you torque down the main valve body. This will result in ATF pump seizure if not detected. Use the proper tools. • Install the main seal flush with the torque converter housing. If you push it into the torque converter housing until it bottoms out, it will block the fluid return passage and result in damage.
Vehicle moves in R, but not in D, L, or the M mode in 1st	1. 1st gear one-way cluch defective 2. 1st accumulator defective 3. 1st clutch defective	• Check the 1st clutch pressure. • Inspect the secondary shaft and 1st/1st-hold/2nd clutch assembly for wear and damage. • Inspect the clutch piston, clutch piston check valve, and O-rings. Check the spring retainer for wear and damage. Inspect the clutch end-plate-to-top disc clearance. If the clearance is out of tolerance, inspect the clutch discs and plates for wear and damage. If the discs and plates are worn and damaged, replace them as a set. If they are OK, adjust the clutch end plate clearance.

(cont'd)

Symptom Troubleshooting Index (cont'd)

Symptom	Probable cause(s)	Notes
Vehicle moves in D, M, and R, but not in L	1. 1st-hold accumulator defective 2. 1st-hold clutch defective	• Check the 1st-hold clutch pressure. • Inspect the secondary shaft and 1st/1st-hold/2nd clutch assembly for wear and damage. • Inspect the clutch piston, clutch piston check valve, and O-rings. Check the spring retainer for wear and damage. Inspect the clutch end-plate-to-top-disc clearance. If the clearance is out of tolerance, inspect the clutch discs and plates for wear and damage. If the discs and plates are worn or damaged, replace them as a set. If they are OK, adjust the clutch end plate clearance.
Vehicle moves in D, L, and M, but not in R (or moves forward in R)	1. Shift fork shaft stuck 2. Modulator valve defective 3. Reverse CPC valve defective 4. 5th accumulator defective 5. 5th clutch defective 6. Reverse gears worn or damaged	• Check the line pressure and 5th clutch pressure. • Check for a missing shift fork bolt on the shift fork shaft. • Check the ATF strainer for debris. If the ATF strainer is clogged with particles of steel or aluminum, inspect the ATF pump. If the ATF pump is OK, find the damaged components that caused the debris. If no cause for the contamination is found, replace the torque converter. • Inspect the reverse selector gear teeth chamfers, and inspect engagement teeth chamfers of the countershaft 5th gear and reverse gear. Replace the reverse gears and the reverse selector if they are worn or damaged. If the transmission makes clicking, grinding, or whirring noises, also replace the mainshaft 5th gear, reverse idler gear, and countershaft 5th gear. • If the 5th clutch feed pipe guide in the end cover is scored by the mainshaft, inspect the ball bearing for excessive movement in the transmission housing. If the ball bearing is OK, replace the end cover as it is dented. The O-ring under the guide is probably worn. • Replace the mainshaft if the bushing for the 4th and 5th clutch feed pipes are loose or damaged. If the 5th clutch feed pipe is damaged or out of round, replace the end cover. • Inspect the clutch piston, clutch piston check valve, and O-rings. Check the spring retainer for wear and damage. Inspect the clutch end-plate-to-top-disc clearance. If the clearance is out of tolerance, inspect the clutch discs and plates for wear and damage. If the discs and plates are worn or damaged, replace them as a set. If they are OK, adjust the clearance with the clutch end plate.

Protected by ...

Symptom	Probable cause(s)	Notes
Poor acceleration; flares on starting off in D; stall speed high in D and L	1. Low ATF level 2. Shift cable broken or out of adjustment 3. ATF pump worn or binding 4. Regulator valve stuck or spring worn 5. ATF strainer clogged 6. Torque converter check valve defective	• Check the ATF level, and check the ATF cooler lines for leakage and loose connections. • Check for a loose shift cable at the shift lever and the transmission control shaft. • Check the line pressure. • Improper alignment of ATF pump and torque converter housing may cause ATF pump seizure. The symptom is mostly an rpm-ticking noise or a high pitched squeak. • Be careful not to damage the torque converter housing when replacing the main ball bearing. You may also damage the ATF pump when you torque down the main valve body. This will result in ATF pump seizure if not detected. Use the proper tools.
Poor acceleration; flares on starting off in R; stall speed high in R	1. Shift cable broken or out of adjustment 2. 5th clutch defective	• Check for a loose shift cable at the shift lever and the transmission control shaft. • Check the 5th clutch pressure. • Inspect the clutch piston, clutch piston check valve, and O-rings. Check the spring retainer for wear and damage. Inspect the clutch end-plate-to-top-disc clearance. If the clearance is out of tolerance, inspect the clutch discs and plates for wear and damage. If the discs and plates are worn or damaged, replace them as a set. If they are OK, adjust the clutch end plate clearance.
Poor acceleration; stall speed low	1. Torque converter clutch solenoid valve defective 2. Engine output low 3. Torque converter clutch piston defective 4. Lock-up shift valve defective	Check for a stuck lock-up valve in the valve body.
Engine idle vibration	1. Low ATF level 2. Torque converter clutch solenoid valve defective 3. Drive plate defective or transmission misassembled 4. Engine output low 5. Torque converter clutch piston defective 6. ATF pump worn or binding 7. Lock-up shift valve defective	• Set idle rpm in gear to the specified idle speed. If still no good, adjust the engine and transmission mounts. • Check the ATF level, and check the ATF cooler lines for leakage and loose connections. If necessary, flush the ATF cooler lines.

(cont'd)

Symptom Troubleshooting Index (cont'd)

Symptom	Probable cause(s)	Notes
Vehicle moves in N	1. Excessive ATF 2. Foreign material in separator plate orifice 3. Relief valve defective 4. 1st-hold clutch defective 5. 1st clutch defective 6. 2nd clutch defective 7. 3rd clutch defective 8. 4th clutch defective 9. 5th clutch defective 10. Clutch clearance incorrect 11. Needle bearing seized up, worn, or damaged 12. Thrust washer seized up, worn, or damaged	• Check the ATF level, and drain the ATF if it is over filled. • Inspect the clutch piston, clutch piston check valve, and O-rings. Check the spring retainer for wear and damage. Inspect the clutch end-plate-to-top-disc clearance. If the clearance is out of tolerance, inspect the clutch discs and plates for wear and damage. If the discs and plates are worn or damaged, replace them as a set. If they are OK, adjust the clutch end plate clearance. • Check all clutch pressures.
Late shift after shifting from N to D, or excessive shock when shifted into D	1. Shift solenoid valve C defective 2. A/T clutch pressure control solenoid valve A defective 3. A/T clutch pressure control solenoid valve B defective 4. A/T clutch pressure control solenoid valve C defective 5. Shift cable broken or out of adjustment 6. Joint in shift cable and transmission or body worn 7. Input shaft (mainshaft) speed sensor defective 8. Output shaft (countershaft) speed sensor defective 9. ATF temperature sensor defective 10. CPC valve C stuck 11. Foreign material in separator plate orifice 12. Shift valve C defective 13. Shift valve E defective 14. Servo control valve defective 15. 1st accumulator defective 16. 1st check ball stuck 17. 1st clutch defective	• Check the D indicator, and check for loose connectors. Inspect the O-ring, and check the shift solenoid valve for seizure. • Inspect the A/T clutch pressure control solenoid valve body gasket and ATF feed pipes for wear and damage. If the A/T clutch pressure control solenoid valve is stuck, inspect the CPC valves. • Check the ATF strainer for debris. Check for a loose shift cable at the shift lever and the transmission control shaft. • If the ATF strainer is clogged with particles of steel or aluminum, inspect the ATF pump. If the ATF pump is OK, and no cause for the contamination is found, replace the torque converter. • Check the 1st clutch pressure. • Inspect the clutch piston, clutch piston check valve, and O-rings. Check the spring retainer for wear and damage. Inspect the clutch end-plate-to-top-disc clearance. If the clearance is out of tolerance, inspect the clutch discs and plates for wear and damage. If the discs and plates are worn or damaged, replace them as a set. If they are OK, adjust the clutch end plate clearance.

Protected by Acura

Symptom	Probable cause(s)	Notes
Late shift after shifting from N to R	1. Shift solenoid valve C defective 2. A/T clutch pressure control solenoid valve A defective 3. A/T clutch pressure control solenoid valve B defective 4. A/T clutch pressure control solenoid valve C defective 5. Shift cable broken or out of adjustment 6. Joint in shift cable and transmission or body worn 7. Input shaft (mainshaft) speed sensor defective 8. Output shaft (countershaft) speed sensor defective 9. ATF temperature sensor defective 10. Shift fork shaft stuck 11. CPC valve C stuck 12. Reverse CPC valve defective 13. Foreign material in separator plate orifice 14. Shift valve E defective 15. 5th accumulator defective 16. 5th clutch defective	• Check the D indicator, and check for loose connectors. Inspect the O-ring, and check the shift solenoid valve for seizure. • Inspect the A/T clutch pressure control solenoid valve body gasket and ATF feed pipes for wear and damage. If the A/T clutch pressure control solenoid valve is stuck, inspect the CPC valves. • Check for a loose shift cable at the shift lever and the transmission control shaft. • Check the ATF strainer for debris. If the ATF strainer is clogged with particles of steel or aluminum, inspect the ATF pump. If the ATF pump is OK, find the damaged components that caused the debris. If no cause for the contamination is found, replace the torque converter. • Check the 5th clutch pressure. • Inspect the clutch piston, clutch piston check valve, and O-rings. Check the spring retainer for wear and damage. Inspect the clutch end-plate-to-top-disc clearance. If the clearance is out of tolerance, inspect the clutch discs and plates for wear and damage. If the discs and plates are worn or damaged, replace them as a set. If they are OK, adjust the clutch end plate clearance.
The A/T does not shift	1. Input shaft (mainshaft) speed sensor defective 2. Output shaft (countershaft) speed sensor defective 3. Modulator valve defective	• Check the D indicator, and check for loose connectors. • Check the line pressure. • Check the input shaft (mainshaft) and output shaft (countershaft) speed sensor installation.
Erratic shifting: fails to shift in D; starts off in 5th	1. Shift solenoid valve B defective 2. Shift valve B defective	Check the D indicator, and check for loose connectors. Inspect the O-ring, and check the shift solenoid valve for seizure.
Erratic shifting: fails to shift in D; starts off in 3rd	1. Shift solenoid valve A defective 2. Shift valve A defective	Check the D indicator, and check for loose connectors. Inspect the O-ring, and check the shift solenoid valve for seizure.

Proofed by

(cont'd)

Symptom Troubleshooting Index (cont'd)

Symptom	Probable cause(s)	Notes
Excessive shock, or flares on all upshifts and downshifts	1. A/T clutch pressure control solenoid valve A defective 2. A/T clutch pressure control solenoid valve B defective 3. Input shaft (mainshaft) speed sensor defective 4. Output shaft (countershaft) speed sensor defective 5. ATF temperature sensor defective 6. CPC valve A defective 7. Foreign material in separator plate orifice	• Check the D indicator, and check for loose connectors. Inspect the A/T clutch pressure control solenoid valve body gasket and ATF feed pipes for wear and damage. If the A/T clutch pressure control solenoid valve is stuck, inspect the CPC valves. • Inspect the sensor O-rings.
Excessive shock, or flares on 1-2 upshift or 2-1 downshift	1. Foreign material in separator plate orifice 2. 2nd accumulator defective 3. 2nd check ball stuck 4. 2nd clutch defective	• Check the 1st and 2nd clutch pressures. • Inspect the clutch piston, clutch piston check valve, and O-rings. Check the spring retainer for wear and damage. Inspect the clutch end-plate-to-top-disc clearance. If the clearance is out of tolerance, inspect the clutch discs and plates for wear and damage. If the discs and plates are worn or damaged, replace them as a set. If they are OK, adjust the clutch end plate clearance.
Excessive shock, or flares on 2-3 upshift or 3-2 downshift	1. Shift solenoid valve C defective 2. A/T clutch pressure control solenoid valve A defective 3. A/T clutch pressure control solenoid valve B defective 4. 3rd clutch transmission fluid pressure switch defective 5. CPC valve B defective 6. Foreign material in separator plate orifice 7. Shift valve C defective 8. 2nd accumulator defective 9. 3rd accumulator defective 10. 2nd check ball stuck 11. 2nd clutch defective 12. 3rd clutch defective	• Check the D indicator, and check for loose connectors. Inspect the O-rings, and check the shift solenoid valve for seizure. • Check for clogged orifice in the transmission fluid pressure switch connector. If the orifice is clogged, remove it and clean the connector. • Check the 2nd and 3rd clutch pressures. • Inspect the clutch piston, clutch piston check valve, and O-rings. Check the spring retainer for wear and damage. Inspect the clutch end-plate-to-top-disc clearance. If the clearance is out of tolerance, inspect the clutch discs and plates for wear and damage. If the discs and plates are worn or damaged, replace them as a set. If they are OK, adjust the clutch end plate clearance.

Protected by USA R

Symptom	Probable cause(s)	Notes
Excessive shock, or flares on 3-4 upshift or 4-3 downshift	1. Shift solenoid valve C defective 2. A/T clutch pressure control solenoid valve A defective 3. A/T clutch pressure control solenoid valve B defective 4. 4th clutch transmission fluid pressure switch defective 5. CPC valve B defective 6. Foreign material in separator plate orifice 7. Shift valve C defective 8. 3rd accumulator defective 9. 4th accumulator defective 10. 3rd clutch defective 11. 4th clutch defective	• Check the D indicator, and check for loose connectors. Inspect the O-rings, and check the shift solenoid valve for seizure. • Check for clogged orifice in the transmission fluid pressure switch connector. If the orifice is clogged, remove it and clean the connector. • Check the 3rd and 4th clutch pressures. • Inspect the clutch piston, clutch piston check valve, and O-rings. Check the spring retainer for wear and damage. Inspect the clutch end-plate-to-top-disc clearance. If the clearance is out of tolerance, inspect the clutch discs and plates for wear and damage. If the discs and plates are worn or damaged, replace them as a set. If they are OK, adjust the clutch end plate clearance.
Excessive shock, or flares on 4-5 upshift or 5-4 downshift	1. Shift solenoid valve C defective 2. A/T clutch pressure control solenoid valve A defective 3. A/T clutch pressure control solenoid valve B defective 4. A/T clutch pressure control solenoid valve C defective 5. CPC valve B defective 6. CPC valve C defective 7. Foreign material in separator plate orifice 8. Shift valve C defective 9. Shift valve E defective 10. Kick-down valve or kick-down short valve defective 11. 4th accumulator defective 12. 5th accumulator defective 13. 4th clutch defective 14. 5th clutch defective	• Check the D indicator, and check for loose connectors. Inspect the O-rings, and check the shift solenoid valve for seizure. • Check the 4th and 5th clutch pressures. • Inspect the clutch piston, clutch piston check valve, and O-rings. Check the spring retainer for wear and damage. Inspect the clutch end-plate-to-top-disc clearance. If the clearance is out of tolerance, inspect the clutch discs and plates for wear and damage. If the discs and plates are worn or damaged, replace them as a set. If they are OK, adjust the clutch end plate clearance.

Protected with

(cont'd)

Symptom Troubleshooting Index (cont'd)

Symptom	Probable cause(s)	Notes
Noise from transmission in all shift lever positions	1. ATF pump worn or binding 2. Torque converter housing or transmission housing bearing worn or damaged	• Improper alignment of ATF pump and torque converter housing may cause ATF pump seizure. The symptoms are mostly an rpm-related ticking noise or a high pitched squeak. • Inspect the contact of the countershaft and secondary shaft with the bearings. Check the ATF guide plates for damage and wear. Inspect the 1st clutch feed pipe for damage and out of round. If the 1st clutch feed pipe is damaged or out of round, replace it. Replace the secondary shaft if the bushing for the 1st clutch feed pipe is damaged or out of round.
Vehicle does not accelerate above 31 mph (50 km/h)	Torque converter one-way clutch defective	Replace the torque converter.
Vibration in all shift lever positions	Drive plate defective or transmission misassembled	• Check for a misinstalled/damaged drive plate. • Set idle rpm in gear to the specified idle speed. If still no good, adjust the engine mounts. • Check the stall speed.
Shift lever does not operate smoothly	1. Transmission range switch defective or out of adjustment 2. Shift cable broken or out of adjustment 3. Joint in shift cable and transmission or body worn	• Check the D indicator, and check for loose connectors. Inspect the transmission range switch. If the transmission range switch is faulty, replace it. If the transmission range switch is out of adjustment, adjust it and the shift cable. • Check for a loose shift cable at the shift lever and the transmission control shaft.
Transmission does not shift into P	1. Shift cable broken or out of adjustment 2. Joint in shift cable and transmission or body worn 3. Park mechanism defective	• Check for a loose shift cable at the shift lever and the transmission control shaft. • Check the park pawl spring installation and the park lever spring installation. If installation is incorrect, install the spring correctly. Make sure that the park lever stop is not installed upside down. Check the distance between the park pawl shaft and the park lever roller pin. If the distance is out of tolerance, adjust the distance with the park lever stop.
Torque converter clutch does not disengage	1. Torque converter clutch solenoid valve defective 2. A/T clutch pressure control solenoid valve C defective 3. Torque converter clutch piston defective 4. Lock-up shift valve defective 5. Lock-up control valve defective 6. Lock-up timing valve defective	Check the D indicator, and check for loose connectors. Inspect the A/T clutch pressure control solenoid valve body gasket for wear and damage. If the A/T clutch pressure control solenoid valve is stuck, inspect the CPC valves.

Protected by AR

Symptom	Probable cause(s)	Notes
Torque converter clutch does not operate smoothly	1. Engine performance problem 2. Torque converter clutch solenoid valve defective 3. A/T clutch pressure control solenoid valve C defective 4. Torque converter clutch piston defective 5. Torque converter check valve defective 6. Lock-up shift valve defective 7. Lock-up control valve defective 8. Lock-up timing valve defective	• Check the EGR valve voltage during falure. A sticking EGR valve can cause erratic operation and cause the drivetrain to surge when lock up occurs. • Check the D indicator, and check for loose connectors. Inspect the A/T clutch pressure control solenoid valve body gasket for wear and damage. If the A/T clutch pressure control solenoid valve is stuck, inspect the CPC valves. • Center all engine mounts.
Torque converter clutch does not engage	1. Torque converter clutch solenoid valve defective 2. A/T clutch pressure control solenoid valve C defective 3. Input shaft (mainshaft) speed sensor defective 4. Output shaft (countershaft) speed sensor defective 5. Torque converter clutch piston defective 6. Torque converter check valve defective 7. Lock-up shift valve defective 8. Lock-up control valve defective	Check the D indicator, and check for loose connectors. Inspect the A/T clutch pressure control solenoid valve body gasket for wear and damage. If the A/T clutch pressure control solenoid valve is stuck, inspect the CPC valves.
A/T gear position indicator does not indicate shift lever positions	1. Transmission range switch defective or out of adjustment 2. Shift cable broken or out of adjustment 3. Joint in shift cable and transmission or body worn	• Check the D indicator, and check for loose connectors. Inspect the transmission range switch. If the transmission range switch is faulty, replace it. If the transmission range switch is out of adjustment, adjust it and the shift cable. • Check for a loose shift cable at the shift lever and the transmission control shaft.
Speedometer and odometer do not work	Output shaft (countershaft) speed sensor defective	Check the D indicator, and check for loose connectors.
The engine does not rev to high rpm, and the transmission upshifts at low rpm (engine at normal operating temperature)	VTEC rocker arms defective	Check the engine rocker arms.

Protected by A

System Description

General Operation

The automatic transmission is a combination of a 3-element torque converter and triple-shaft electronically controlled unit which provides 5 speeds forward and 1 reverse. The entire unit is positioned in line with the engine.

Torque Converter, Gears, and Clutches

The torque converter consists of a pump, turbine, and stator assembly in a single unit. The converter housing (pump) is connected to the engine crankshaft and turns as the engine turns. Around the outside of the torque converter is a ring gear which meshes with the starter pinion when the engine is being started. The entire torque converter assembly serves as a flywheel, transmitting power to the transmission mainshaft. The transmission has three parallel shafts: the mainshaft, the countershaft, and the secondary shaft. The mainshaft is in line with the engine crankshaft. The mainshaft includes the 4th and 5th clutches, and gears for 3rd, 4th, 5th, and reverse (reverse gear is integral with the 5th gear). The countershaft includes the 3rd clutch, and gears for the final drive, 1st, 4th, 5th, reverse, 2nd, park, and 3rd (the final drive gear is integral with the countershaft). The secondary shaft includes the 1st, 1st-hold and 2nd clutches, and gears for 1st, 2nd, and idler. The countershaft 5th gear and the countershaft reverse gear can be locked to the countershaft at its center, providing 5th gear or reverse, depending with which way the selector is moved. The gears on the mainshaft and the secondary shaft are in constant mesh with those on the countershaft. When certain combinations of gears in the transmission are engaged by the clutches, power is transmitted through the mainshaft, then to the secondary shaft to the countershaft provide drive.

Electronic Control

The electronic control system consists of the powertrain control module (PCM), sensors, and seven solenoid valves. Shifting and lock-up are electronically controlled for comfortable driving under all conditions. The PCM is located below the dashboard, under the front lower panel behind the center console.

Hydraulic Control

The valve bodies include the main valve body, the regulator valve body, the servo body, and the accumulator body. They are bolted to the torque converter housing. The main valve body contains the manual valve, the modulator valve, the shift valve C, the shift valve D, the kick-down valve, the servo control valve, the torque converter check valve, the reverse CPC valve, the lock-up shift valve, the relief valve, the cooler check valve, and the ATF pump gears. The regulator valve body contains the regulator valve, the lock-up timing valve, and the lock-up control valve. The servo body contains the servo valve, the shift valve A, the shift valve B, the CPC valves A and B. The top accumulator body contains shift valve E, CPC valve C, 1st-hold accumulator piston, 4th accumulator piston, and 5th accumulator piston. The accumulator body contains the 1st and 2nd accumulators and lubrication check valve. Fluid from the regulator passes through the manual valve to the various control valves. The 1st, 3rd, 4th, and 5th clutches receive fluid from their respective feed pipes, and the 1st-hold and 2nd clutches receive fluid from the internal hydraulic circuit.

Shift Control Mechanism

To shift gears, the PCM controls shift solenoid valves A, B, and C, and automatic transaxle (A/T) clutch pressure control solenoid valves A and B, while receiving input signals from various sensors and switches located throughout the vehicle. The shift solenoid valves shift the positions of the shift valves to switch the port leading hydraulic pressure to the clutch. The A/T clutch pressure control solenoid valves A and B control the CPC valves A and B to shift smoothly between lower gear and higher gear. This pressurizes a line to one of the clutches, engaging the clutch and its corresponding gear.

Lock-up Mechanism

The lock-up mechanism operates in the D position (2nd, 3rd, 4th, and 5th). The pressurized fluid is drained from the back of the torque converter through a fluid passage, causing the torque converter clutch piston to be held against the torque converter cover. As this takes place, the mainshaft rotates at the same speed as the engine crankshaft. Together with hydraulic control, the PCM optimizes the timing of the lock-up mechanism. When the torque converter clutch solenoid valve activates, modulator pressure changes to switch lock-up on and off. The lock-up control valve and the lock-up timing valve control the volume of lock-up according to A/T clutch pressure control solenoid valve C. The torque converter clutch solenoid valve is mounted on the torque converter housing, and A/T clutch pressure control solenoid valve C is mounted on the transmission housing. They are all controlled by the PCM.

Printed by www.

Gear Selection
The shift lever has five positions; P: PARK, R: REVERSE, N: NEUTRAL, D: DRIVE 1st through 5th gear range with automatic shift and sequential sportshift in M (Sequential sportshift mode) position, and L: LOW 1st gear and 2nd gear.

Position		Description
P: PARK		Front wheels locked; park pawl engaged with park gear on countershaft. All clutches are released.
R: REVERSE		Reverse; reverse selector engaged with countershaft reverse gear and 5th clutch engaged.
N: NEUTRAL		All clutches are released.
D: DRIVE (1st through 5th)	Automatic shift	General driving; starts off in 1st, shifts automatically to 2nd, 3rd, 4th, then 5th, depending on vehicle speed and throttle position. Downshifts through 4th, 3 rd, 2nd, and 1st on deceleration to stop. The lock-up mechanism operates in 2 nd, 3rd, 4th, and 5th gear.
	M: Sequential sportshift mode	Manual gear shift driving; starts off in 1st, shifts automatically to 2nd, and vehicle can shift manually between 2nd and 5th gears. The lock-up mechanism operates in 3rd, 4th, and 5th gears.
L: LOW		Used for engine braking; starts off in 1st, shift automatically to 2nd gear depending on vehicle speed. Downshift to 1st to deceleration.

Starting is possible only in the P and N positions because of a slide-type neutral-safety switch.

Automatic Transaxle (A/T) Gear Position Indicator
The A/T gear position indicator in the instrument panel shows which shift lever position has been selected without having to look down at the shift lever. With the shift lever in the M (sequential shift mode) position, the shift indicator in the tachometer will display the gear selected.

Protected by AR

System Description (cont'd)

Clutches

The five-speed automatic transmission uses hydraulically-actuated clutches to engage or disengage the transmission gears. When hydraulic pressure is introduced into the clutch drum, the clutch piston moves. This presses the friction discs and steel plates together, locking them so they don't slip. Power is then transmitted through the engaged clutch pack to its hub-mounted gear. Likewise, when the hydraulic pressure is bled from the clutch pack, the piston releases the friction discs and steel plates, and they are free to slide past each other. This allows the gear to spin independently on its shaft, transmitting no power.

Transmission Cutaway View:

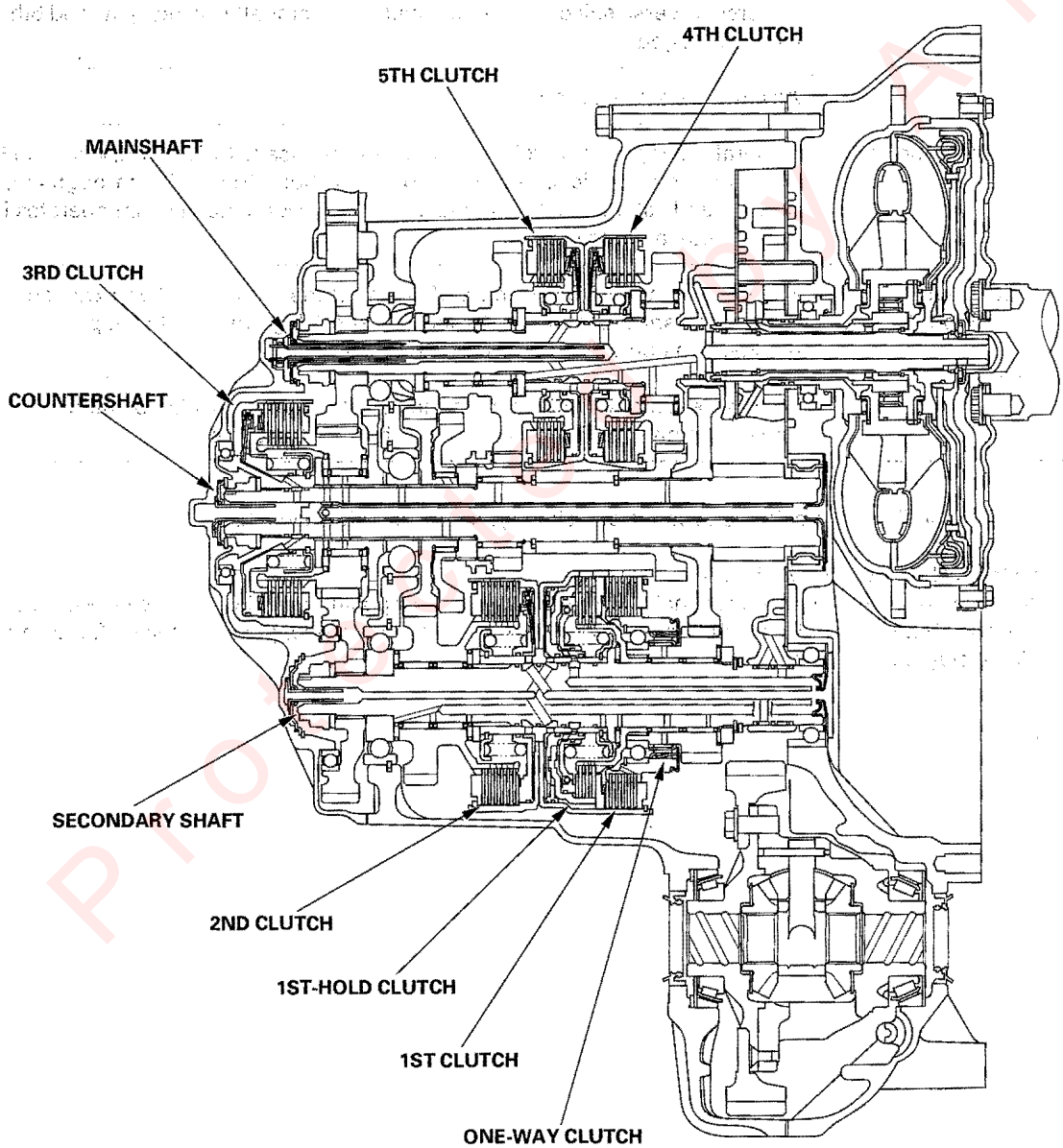

1st Clutch
The 1st clutch engages/disengages 1st gear, and is located at the middle of the secondary shaft. The 1st clutch is joined back-to-back to the 2nd clutch. The 1st clutch is supplied hydraulic pressure by its ATF feed pipe within the secondary shaft.

1st-hold Clutch
The 1st-hold clutch engages/disengages 1st-hold in 1 position, and is located in the 1st clutch drum. The 1st-hold clutch is supplied hydraulic pressure through the orifice inside the secondary shaft by a circuit connected to the internal hydraulic circuit.

2nd Clutch
The 2nd clutch engages/disengages 2nd gear, and is located at the middle of the secondary shaft. The 2nd clutch is joined back-to-back to the 1st clutch. The 2nd clutch is supplied hydraulic pressure through the orifice inside the secondary shaft by a circuit connected to the internal hydraulic circuit.

3rd Clutch
The 3rd clutch engages/disengages 3rd gear, and is located at the end of the countershaft, just behind the end cover. The 3rd clutch is supplied hydraulic pressure by its ATF feed pipe in the countershaft.

4th Clutch
The 4th clutch engages/disengages 4th gear, and is located at the middle of the mainshaft. The 4th clutch is joined back-to-back to the 5th clutch. The 4th clutch is supplied hydraulic pressure by its ATF feed pipe within the mainshaft.

5th Clutch
The 5th clutch engages/disengages 5th gear, as well as reverse gear, and is located at the middle of the mainshaft. The 5th clutch is joined back-to-back to the 4th clutch. The 5th clutch is supplied hydraulic pressure by its ATF feed pipe within the mainshaft.

One-way Clutch
The one-way clutch is positioned between the 1st clutch hub and the secondary shaft 1st gear. The secondary shaft 1st gear is splined to the 1st-hold clutch hub, with the 1st-hold clutch hub splined to the secondary shaft. The secondary shaft 1st gear provides the outer race surface, and the 1st clutch hub provides the inner race surface. The one-way clutch locks when power is transmitted from the secondary shaft 1st gear to the countershaft 1st gear. The 1st clutch and gears remain engaged in the 1st, 2nd, 3rd, 4th, and 5th gear ranges in the D position.
However, the one-way clutch disengages when the 2nd, 3rd, 4th, or 5th clutches and gears are applied in the D position. This is because the increased rotational speed of the gears on the secondary shaft causes the one-way clutch to free-wheels with the 1st clutch still engaged.

Protected by AR

System Description (cont'd)

Power Flow

Gear Operation

Gears on the mainshaft:
- 4th gear is engaged/disengaged with the mainshaft by the 4th clutch.
- 5th gear is engaged/disengaged with the mainshaft by the 5th clutch.
- Reverse gear is engaged/disengaged with the mainshaft by the 5th clutch.
- 3rd gear is splined with the mainshaft and rotates with the mainshaft.

Gears on the countershaft:
- Final gear is integral with the countershaft.
- 1st gear, 4th gear, 2nd gear, and park gear are splined with the countershaft, and rotate with the countershaft.
- 5th gear and reverse gear rotate freely from the countershaft. The reverse selector engages 5th gear and reverse gear with the reverse selector hub. The reverse selector hub is splined to the countershaft so 5th gear and reverse gear engage with the countershaft.
- 3rd gear is engaged/disengaged with the countershaft by the 3rd clutch.

Gears on the secondary shaft:
- 1st gear is engaged/disengaged with the secondary shaft by the 1st clutch. 1st gear is engaged with the secondary shaft by the one-way clutch and the 1st-hold clutch when decelerating for engine braking.
- 2nd gear is engaged/disengaged with the secondary shaft by the 2nd clutch.
- Idler gear is splined with the secondary shaft, and rotates with the secondary shaft.

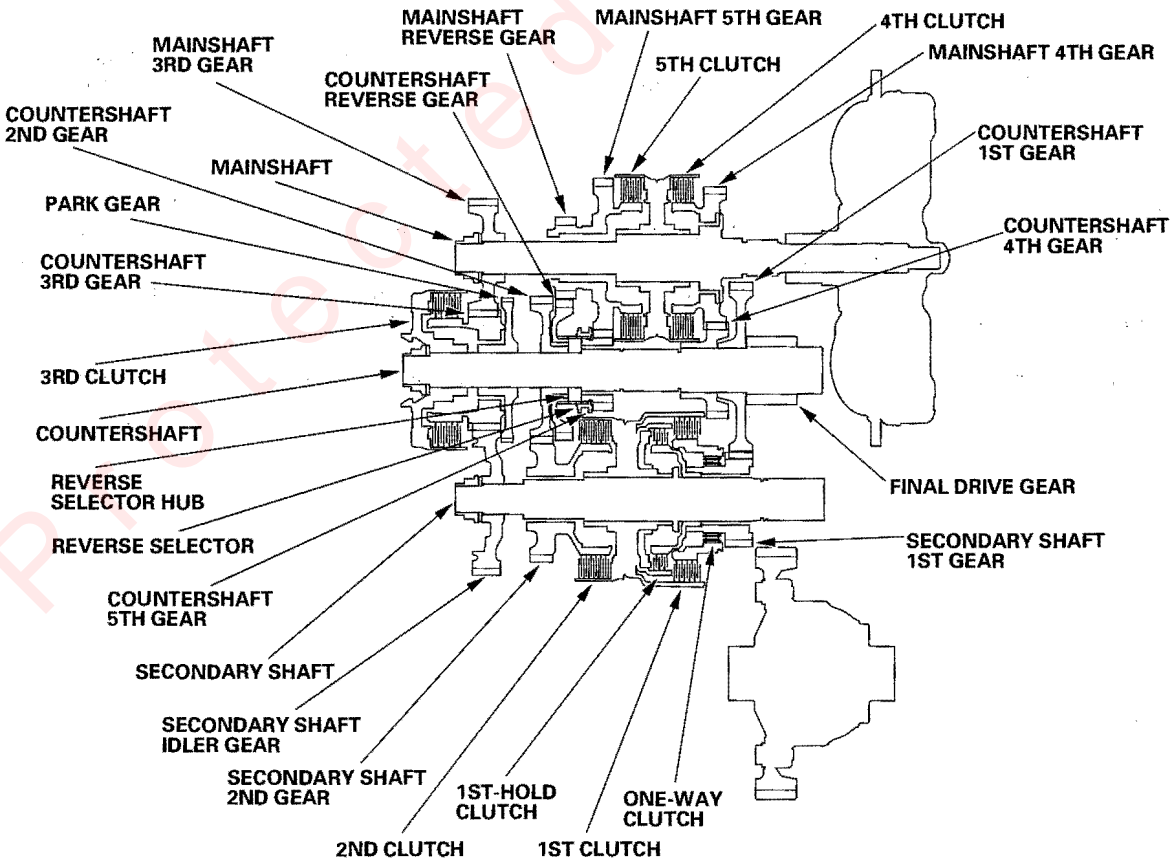

Protected by A R

P Position
Hydraulic pressure is not applied to the clutches. Power is not transmitted to the countershaft. The countershaft is locked by the park pawl interlocking the park gear.

N Position
Engine power transmitted from the countershaft drives the mainshaft 3rd gear, the countershaft 3rd gear, and the secondary shaft idler gear, but hydraulic pressure is not applied to the clutches. Power is not transmitted to the countershaft. In this position, the position of the reverse selector differs according to whether the shift lever shifted from the D or P position:

- When shifted from the D position, the reverse selector engages with the countershaft 5th gear and the reverse selector hub, and the 5th gear engages with the countershaft.
- When shifted from the R position, the reverse selector engages with the countershaft reverse gear and the reverse selector hub, and the reverse gear engages with the countershaft.

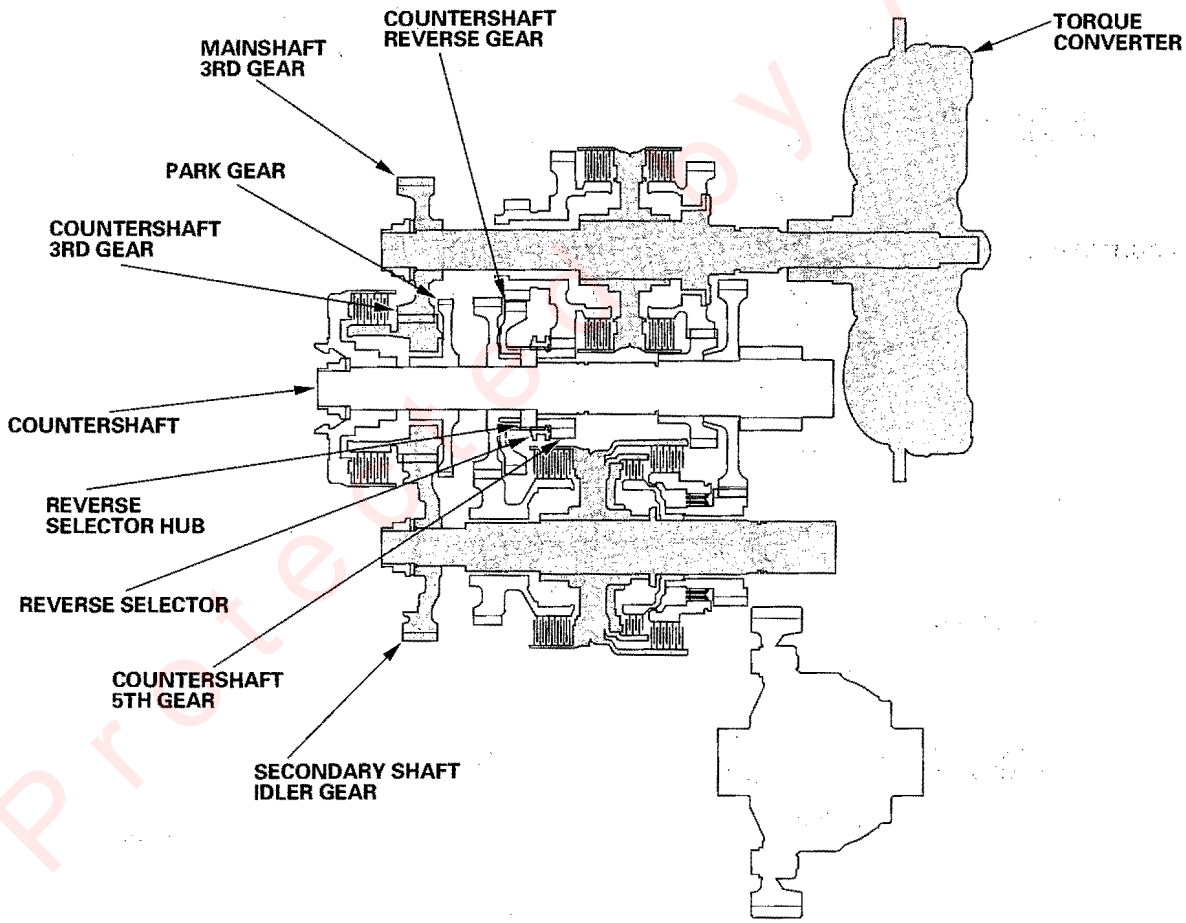

Protected by AR

(cont'd)

System Description (cont'd)

Power Flow (cont'd)

L Position in 1st gear

In the L position in 1st gear, hydraulic pressure is applied to the 1st clutch and the 1st-hold clutch. The power flow when accelerating is as follows:

- Hydraulic pressure is applied to the 1st clutch, then the 1st clutch engages the secondary shaft 1st gear with the secondary shaft by the one-way clutch.
- Hydraulic pressure is also applied to the 1st-hold clutch, and the 1st-hold clutch engages the secondary shaft 1st gear with the secondary shaft.
- The mainshaft 3rd gear drives the secondary shaft via the countershaft 3rd gear and the secondary shaft idler gear.
- The secondary shaft 1st gear drives the countershaft 1st gear and the countershaft.
- Power is transmitted to the final drive gear, which in turn drives the final driven gear.

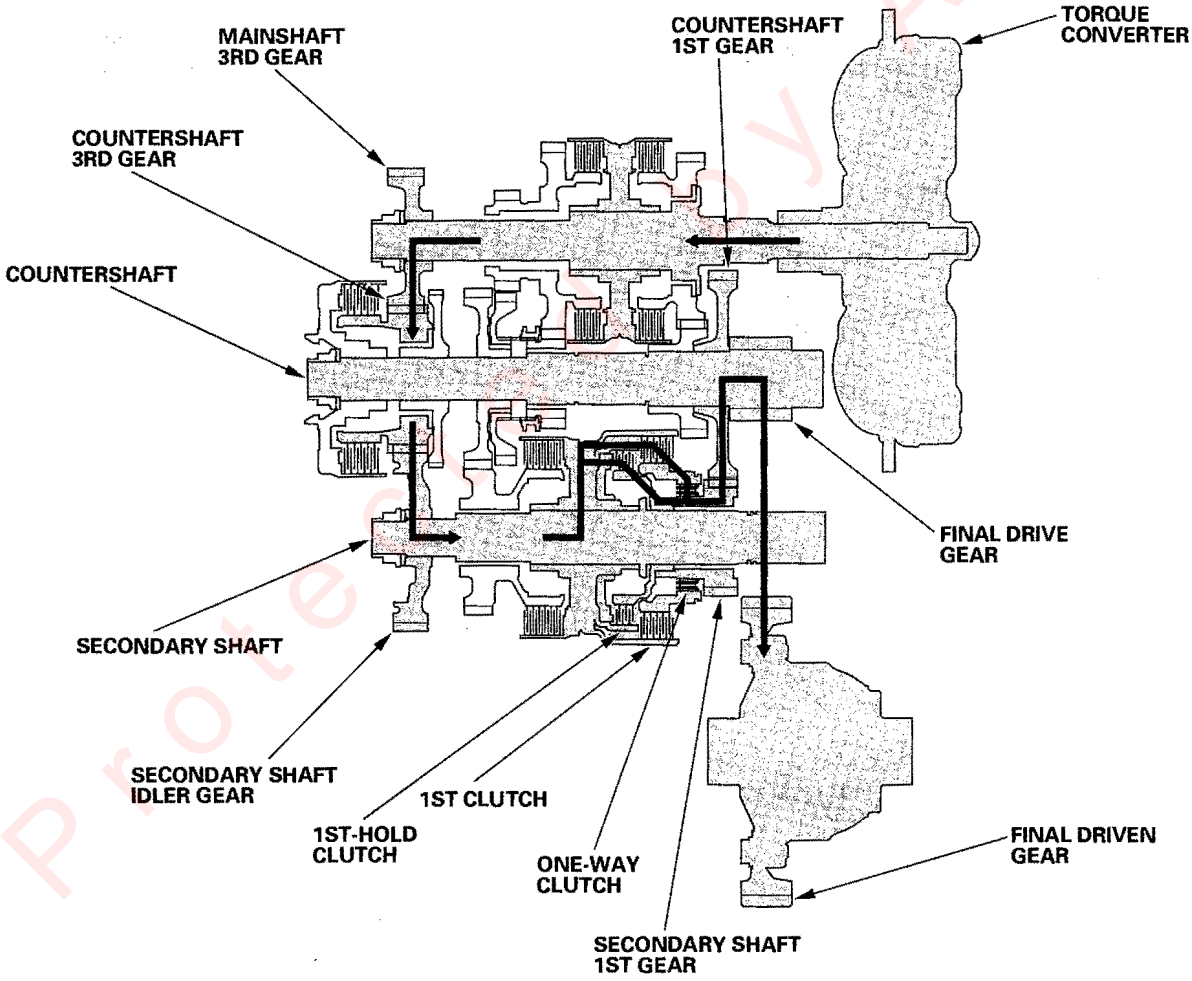

Protected by A R

L Position in 1st gear

The power flow when decelerating as follows:

- Hydraulic pressure is applied to the 1st clutch and the 1st-hold clutch. Rolling resistance from the road surface goes through the front wheels to the final drive gear, then to the secondary shaft idler gear.
- The one-way clutch disengages because the application of torque is reversed.
- The counterforce conveyed to the secondary shaft idler gear turns the mainshaft 3rd gear via the countershaft 3rd gear. As a result, engine braking can be obtained with 1st gear.

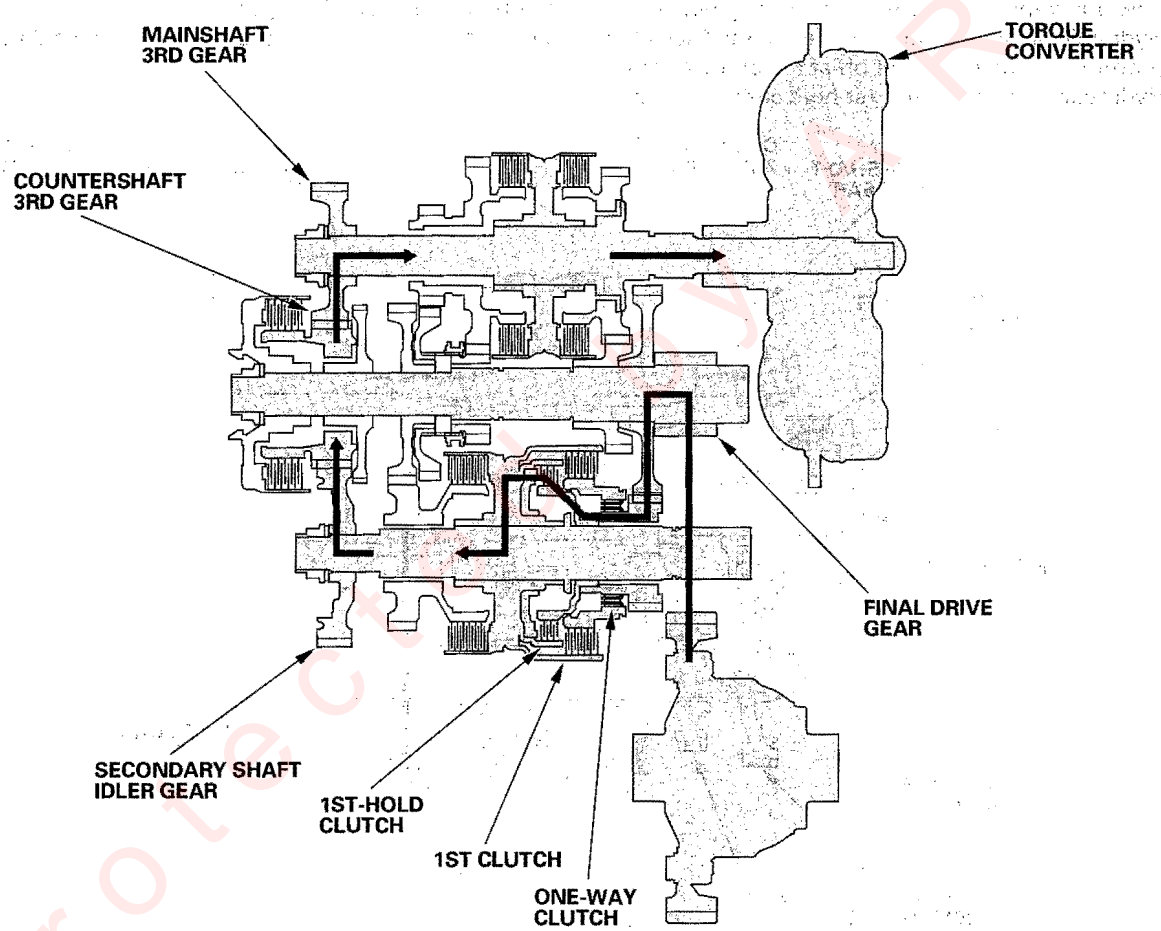

(cont'd)

System Description (cont'd)

Power Flow (cont'd)

L Position in 2nd gear

- Hydraulic pressure is applied to the 2nd clutch, then the 2nd clutch engages the secondary shaft 2nd gear with the secondary shaft.
- The mainshaft 3rd gear drives the secondary shaft via the countershaft 3rd gear and secondary shaft idler gear.
- The secondary shaft 2nd gear drives the countershaft 2nd gear and the countershaft.
- Power is transmitted to the final drive gear, which in turn drives the final driven gear.
- Hydraulic pressure is also applied to the 1st clutch, but since the rotation speed of 2nd gear exceeds that of 1st gear, power from 1st gear is cut off at the one-way clutch.
- Hydraulic pressure in the 1st-hold cluth is released.

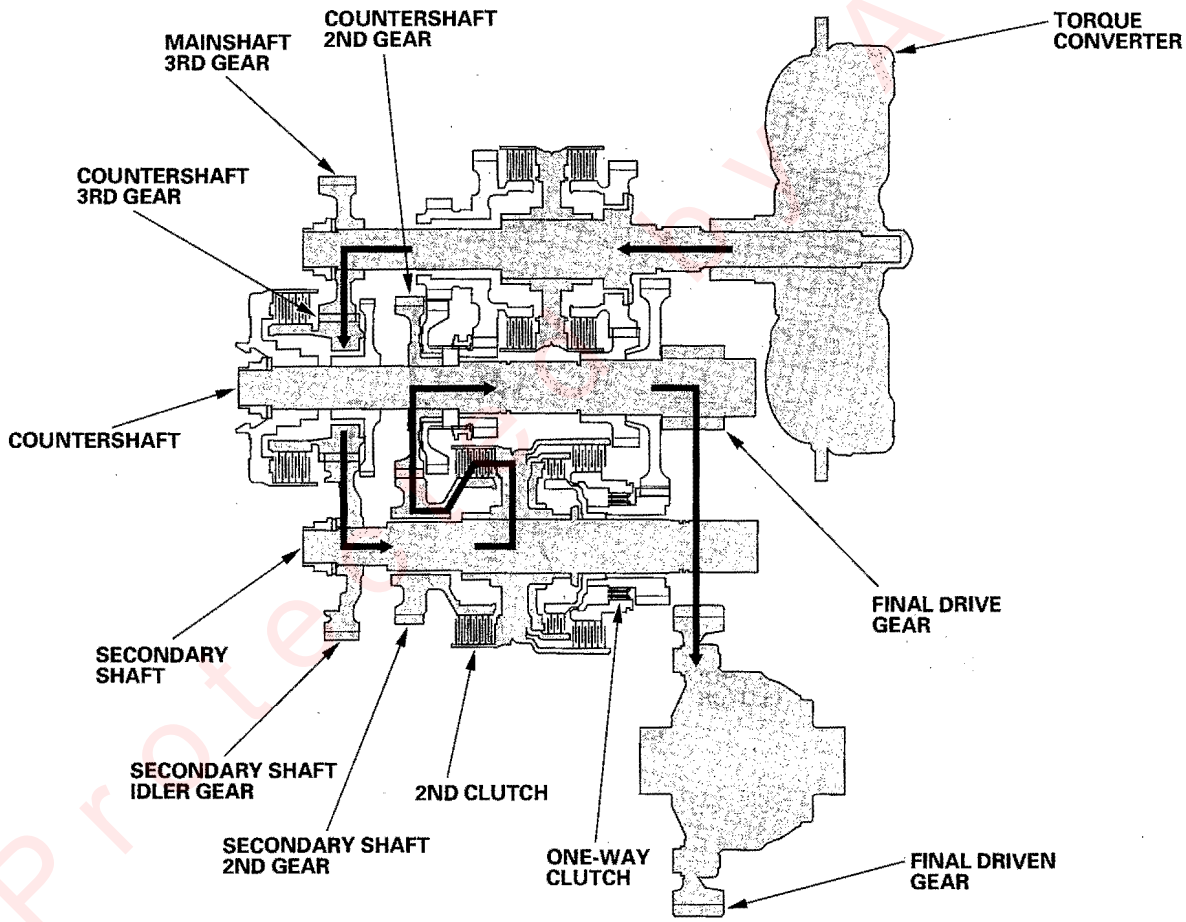

D Position in 1st gear

In the D position, the optimum gear is automatically selected from the 1st, 2nd, 3rd, 4th, and 5th gears according to conditions such as the balance between the throttle opening (engine loading) and vehicle speed.

- Hydraulic pressure is applied to the 1st clutch, then the 1st clutch engages the secondary shaft 1st gear with the secondary shaft by the one-way clutch.
- The mainshaft 3rd gear drives the secondary shaft via the countershaft 3rd gear and secondary shaft idler gear.
- The secondary shaft 1st gear drives the countershaft 1st gear and the countershaft.
- Power is transmitted to the final drive gear, which in turn drives the final driven gear.

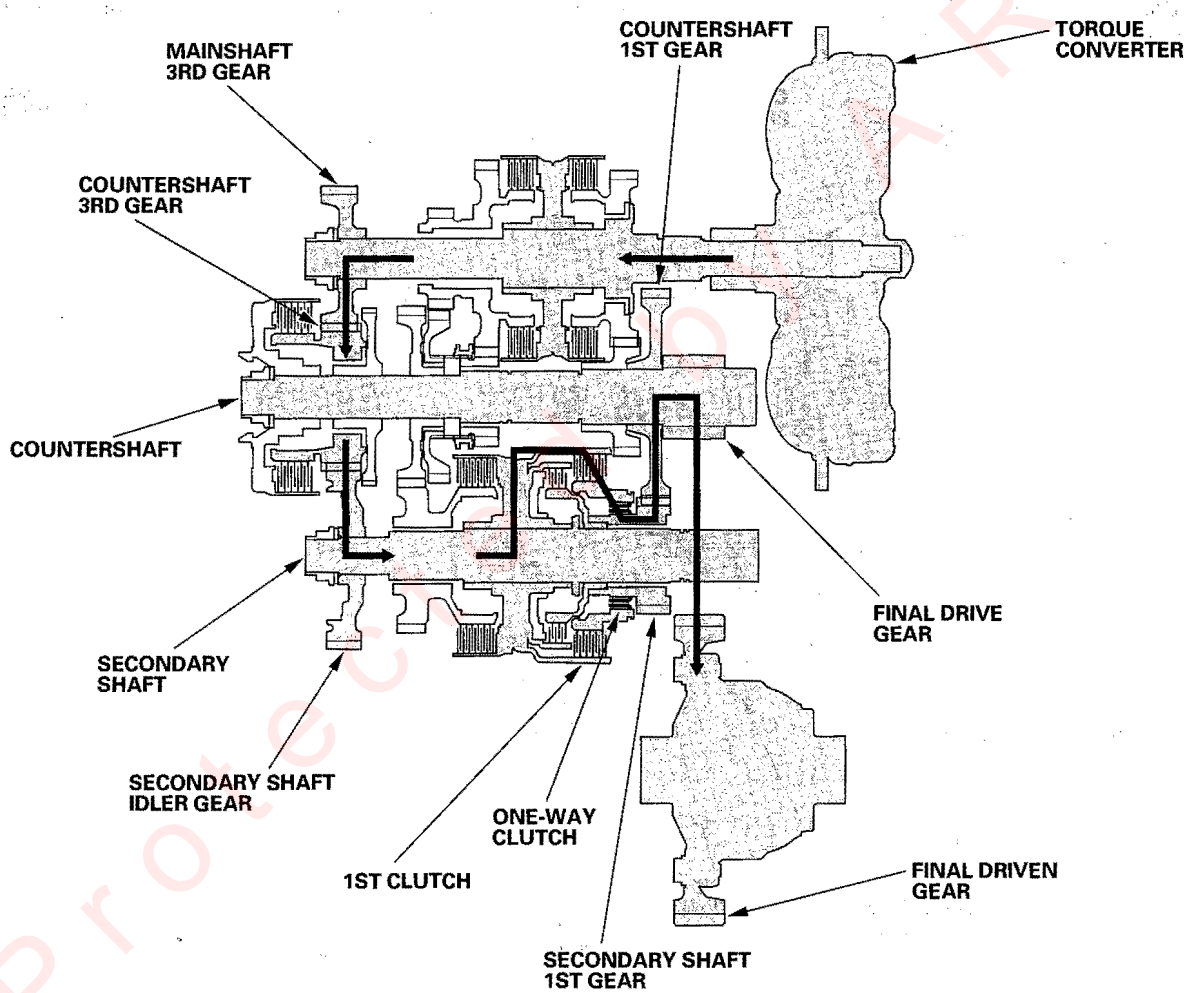

Protected by A R

(cont'd)

System Description (cont'd)

Power Flow (cont'd)

D Position in 2nd gear

- Hydraulic pressure is applied to the 2nd clutch, then the 2nd clutch engages the secondary shaft 2nd gear with the secondary shaft.
- The mainshaft 3rd gear drives the secondary shaft via the countershaft 3rd gear and secondary shaft idler gear.
- The secondary shaft 2nd gear drives the countershaft 2nd gear and the countershaft.
- Power is transmitted to the final drive gear, which in turn drives the final driven gear.
- Hydraulic pressure is also applied to the 1st clutch, but since the rotation speed of 2nd gear exceeds that of 1st gear, power from 1st gear is cut off at the one-way clutch.

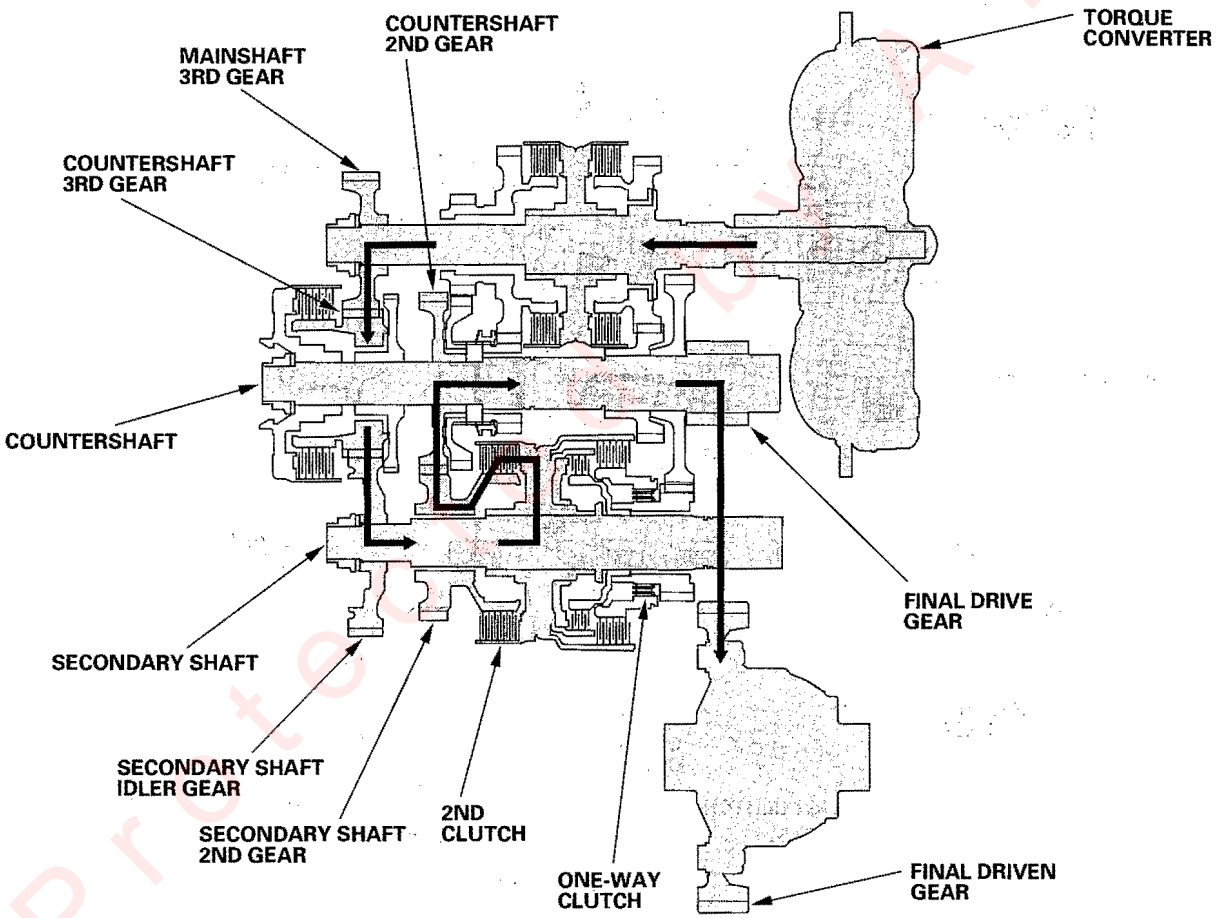

Protected by FAR

D Position in 3rd gear

- Hydraulic pressure is applied to the 3rd clutch, then 3rd clutch engages the countershaft 3rd gear with the countershaft.
- The mainshaft 3rd gear drives the countershaft 3rd gear and countershaft.
- Power is transmitted to the final drive gear, which in turn drives the final driven gear.
- Hydraulic pressure is also applied to the 1st clutch, but since the rotation speed of 3rd gear exceeds that of 1st gear, power from 1st gear is cut off at the one-way clutch.

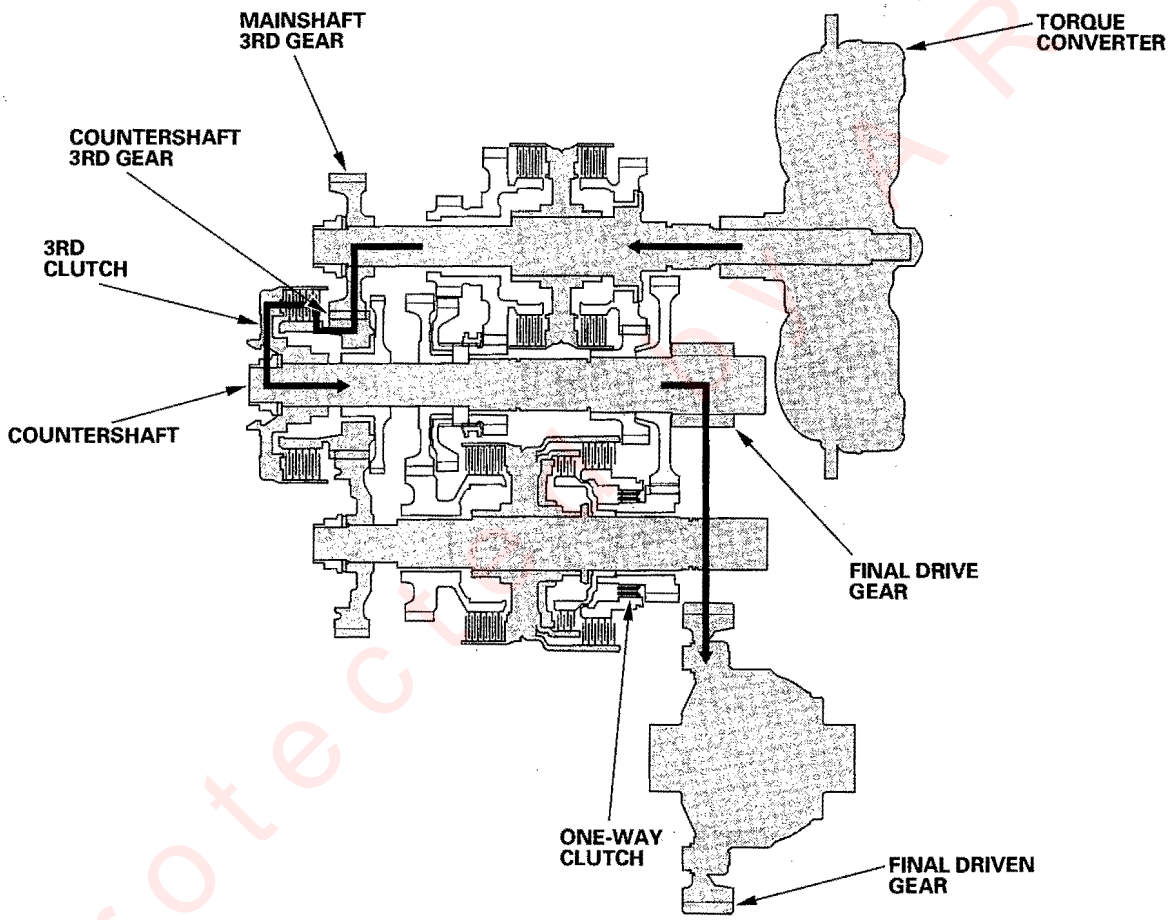

Protected by R

(cont'd)

System Description (cont'd)

Power Flow (cont'd)

D Position in 4th gear

- Hydraulic pressure is applied to the 4th clutch, then the 4th clutch engages the mainshaft 4th gear with the mainshaft.
- The mainshaft 4th gear drives the countershaft 4th gear and the countershaft.
- Power is transmitted to the final drive gear, which in turn drives the final driven gear.
- Hydraulic pressure is also applied to the 1st clutch, but since the rotation speed of 4th gear exceeds that of 1st gear, power from 1st gear is cut off at the one-way clutch.

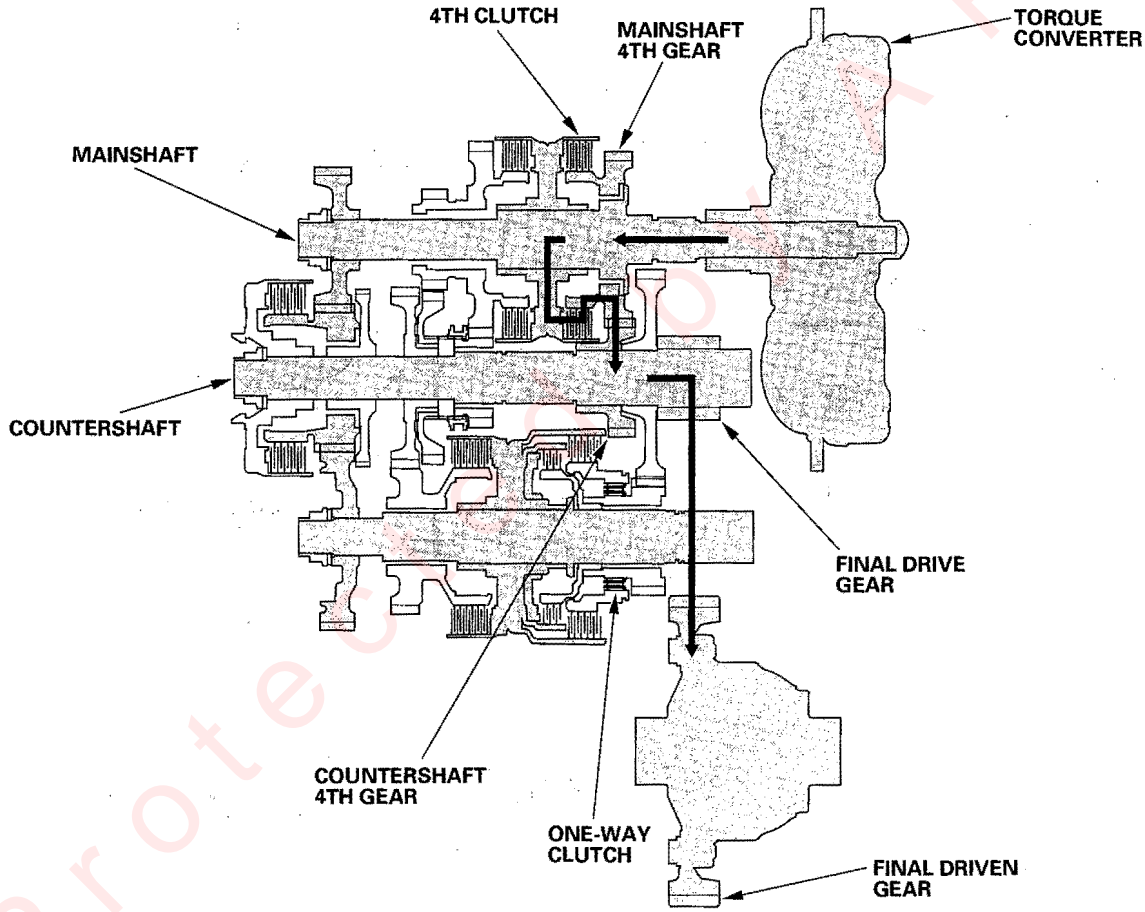

Protected Content

D Position in 5th gear

- Hydraulic pressure is applied to the servo valve to engage the reverse selector with the countershaft 5th gear while the shift lever in the D and L positions.
- Hydraulic pressure is also applied to the 5th clutch, then the 5th clutch engages the mainshaft 5th gear with the mainshaft.
- The mainshaft 5th gear drives the countershaft 5th gear, which drives the reverse selector hub and the countershaft.
- Power is transmitted to the final drive gear, which in turn drives the final driven gear.
- Hydraulic pressure is also applied to the 1st clutch, but since the rotation speed of 5th gear exceeds that of 1st gear, power from 1st gear is cut off at the one-way clutch.

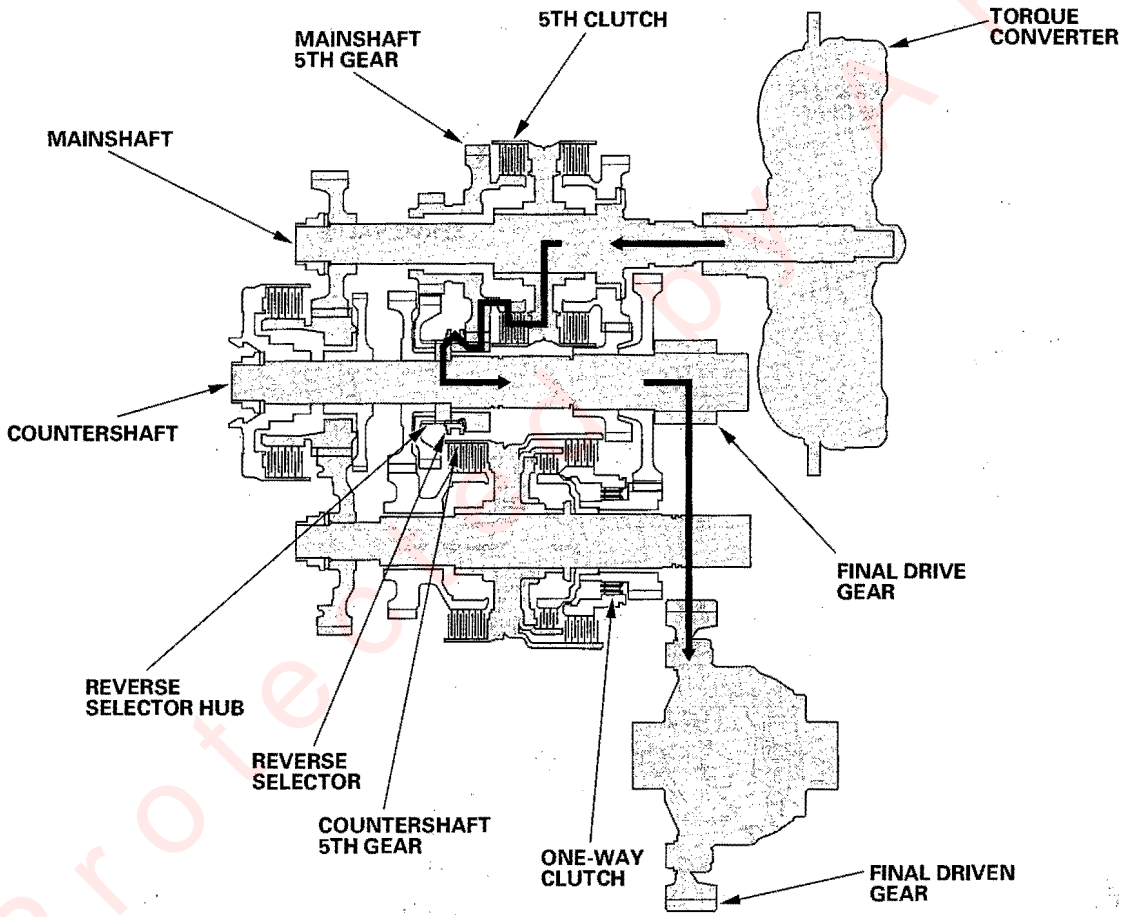

(cont'd)

System Description (cont'd)

Power Flow (cont'd)

R Position

- Hydraulic pressure is applied to the servo valve to engage the reverse selector with the countershaft (reverse gear while the shift lever is in R position).
- Hydraulic pressure is also applied to the 5th clutch, then the 5th clutch engages the mainshaft reverse gear with the mainshaft.
- The mainshaft reverse gear drives the countershaft reverse gear via the reverse idler gear.
- The rotation direction of the countershaft reverse gear is changed via the reverse idler gear.
- The countershaft reverse gear drives the countershaft via the reverse selector which drives the reverse selector hub.
- Power is transmitted to the final drive gear, which in turn drives the final driven gear.

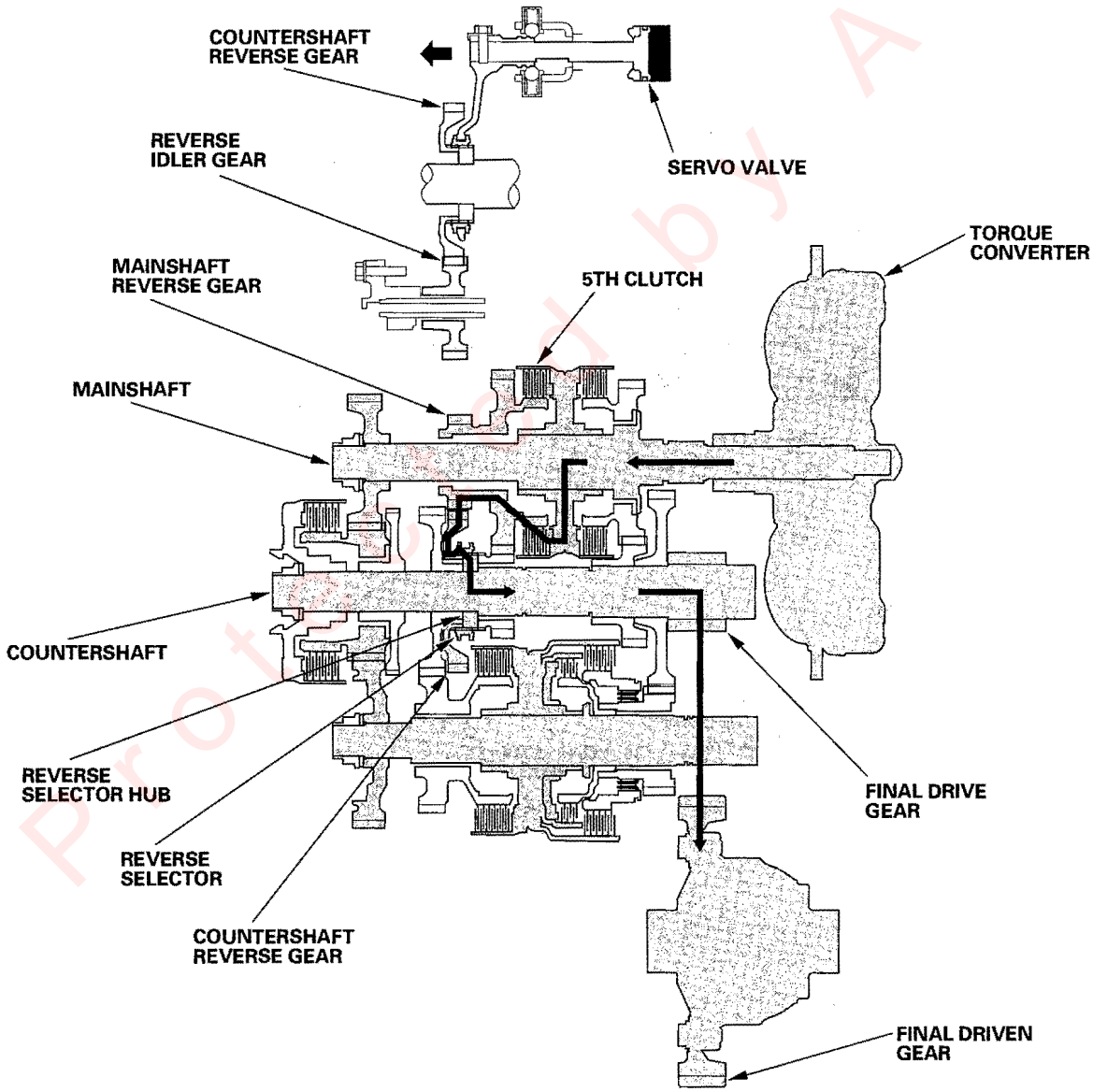

Protected by AR

Electronic Control System

Functional Diagram

The electronic control system consists of the powertrain control module (PCM), sensors, and solenoid valves. Shifting and lock-up are electronically controlled for comfortable driving under all conditions.

The PCM recieves input signals from the sensors, switches, and other control units, perform processing data, and outputs signals for the engine control system and A/T control system. The A/T control system includes shift control, grade logic control, clutch pressure control, and lock-up control is stored in the PCM.
The PCM switches the shift solenoid valves and the A/T clutch pressure control solenoid valves to control shifting transmission gears and lock-up torque converter clutch.

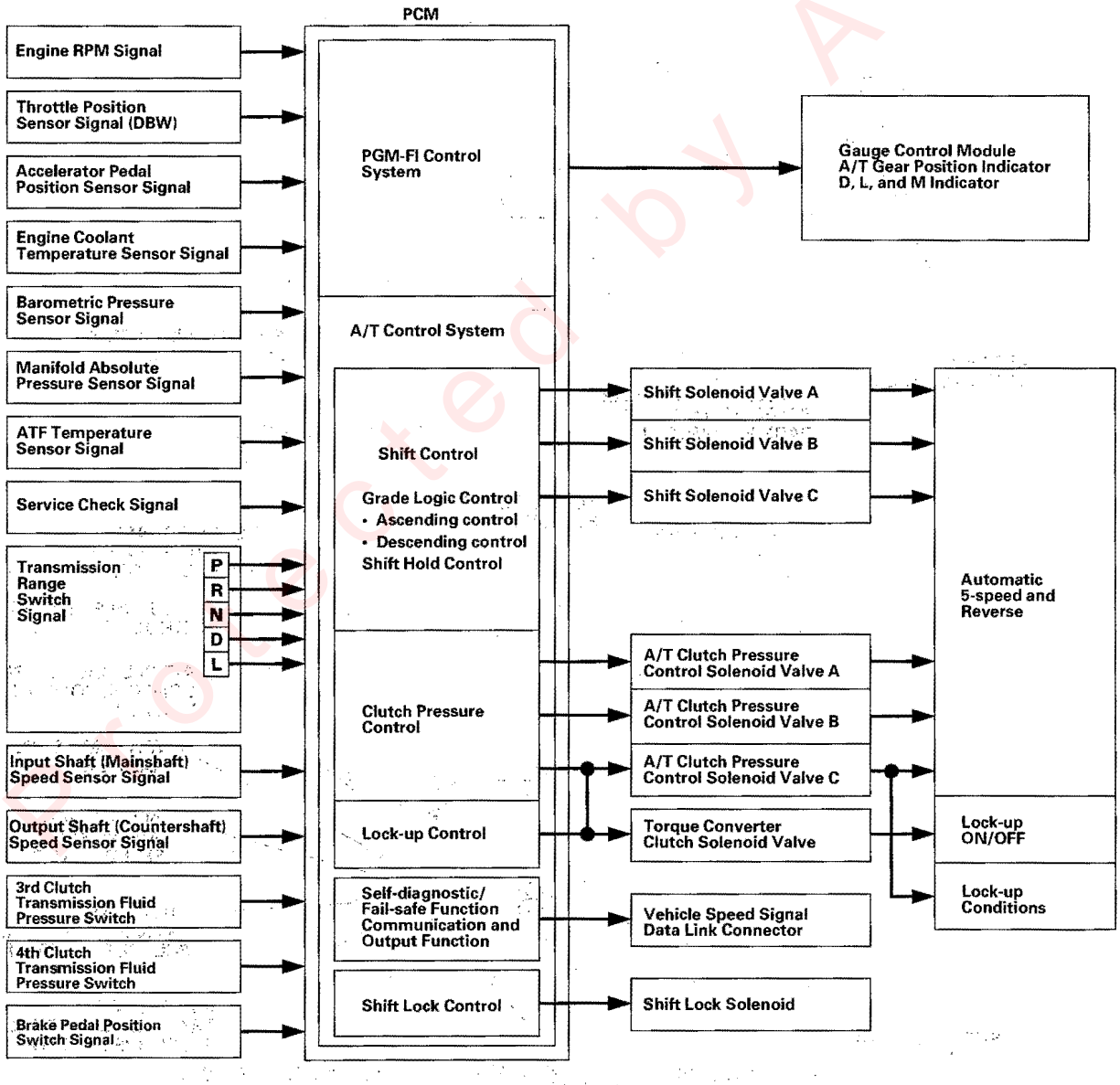

(cont'd)

System Description (cont'd)

Electronic Control System (cont'd)

Electrical Control Locations

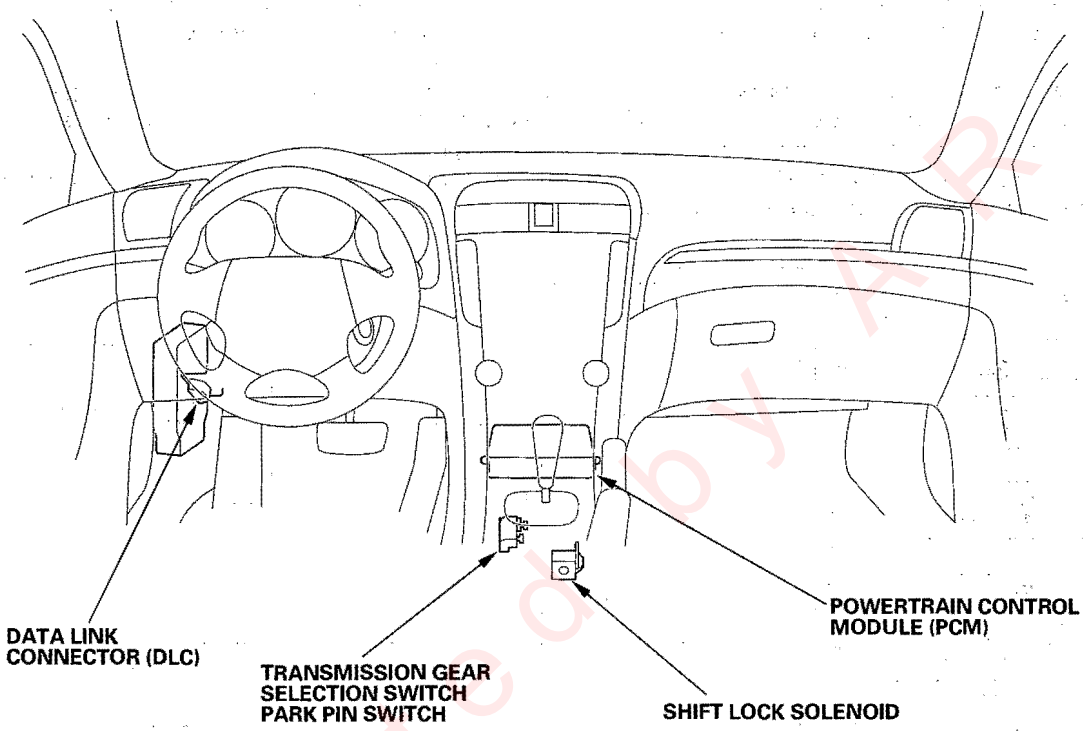

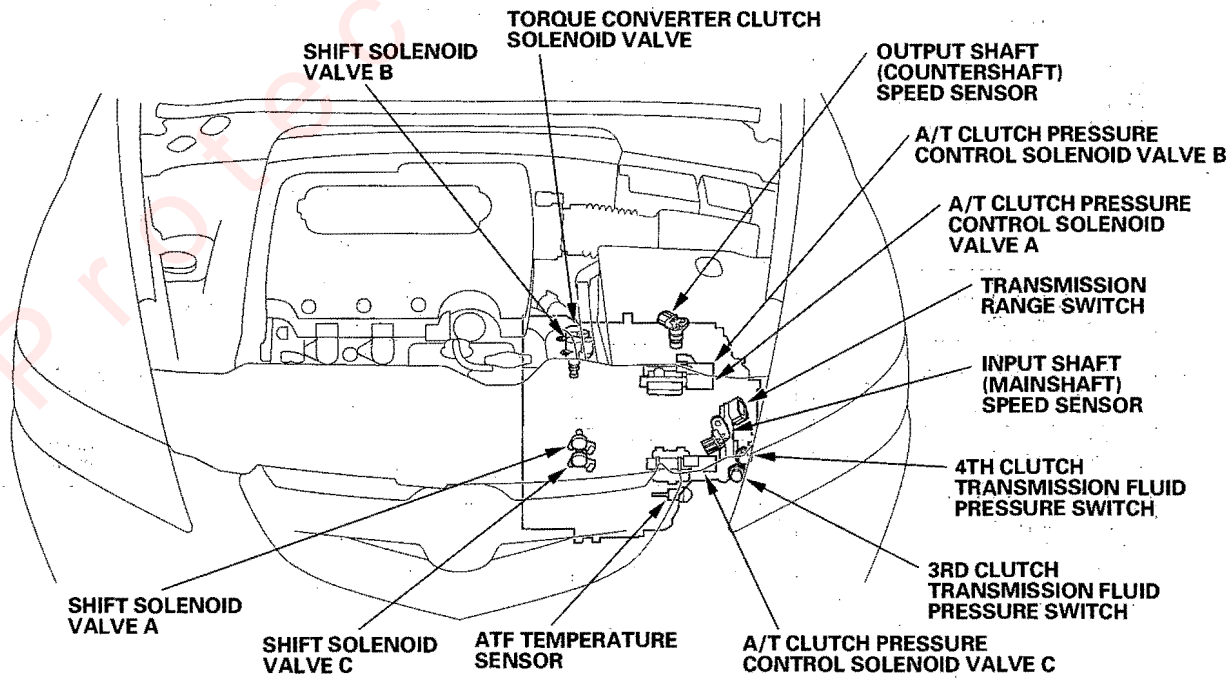

Protected by AR

Shift Control

The PCM instantly determines which gear should be selected by various signals sent from sensors and switches, and it actuates the shift solenoid valves A, B, and C to control shifting.

Also, as grade logic control system and shift hold control system have been adopted to control shifting in the D position. The PCM compares actual driving conditions with memorized driving conditions, based on the input from the throttle position sensor, the engine coolant temperature sensor, the barometric pressure sensor, the brake pedal position switch signal, and the shift lever position signal, to control shifting while the vehicle is ascending or descending a slope.

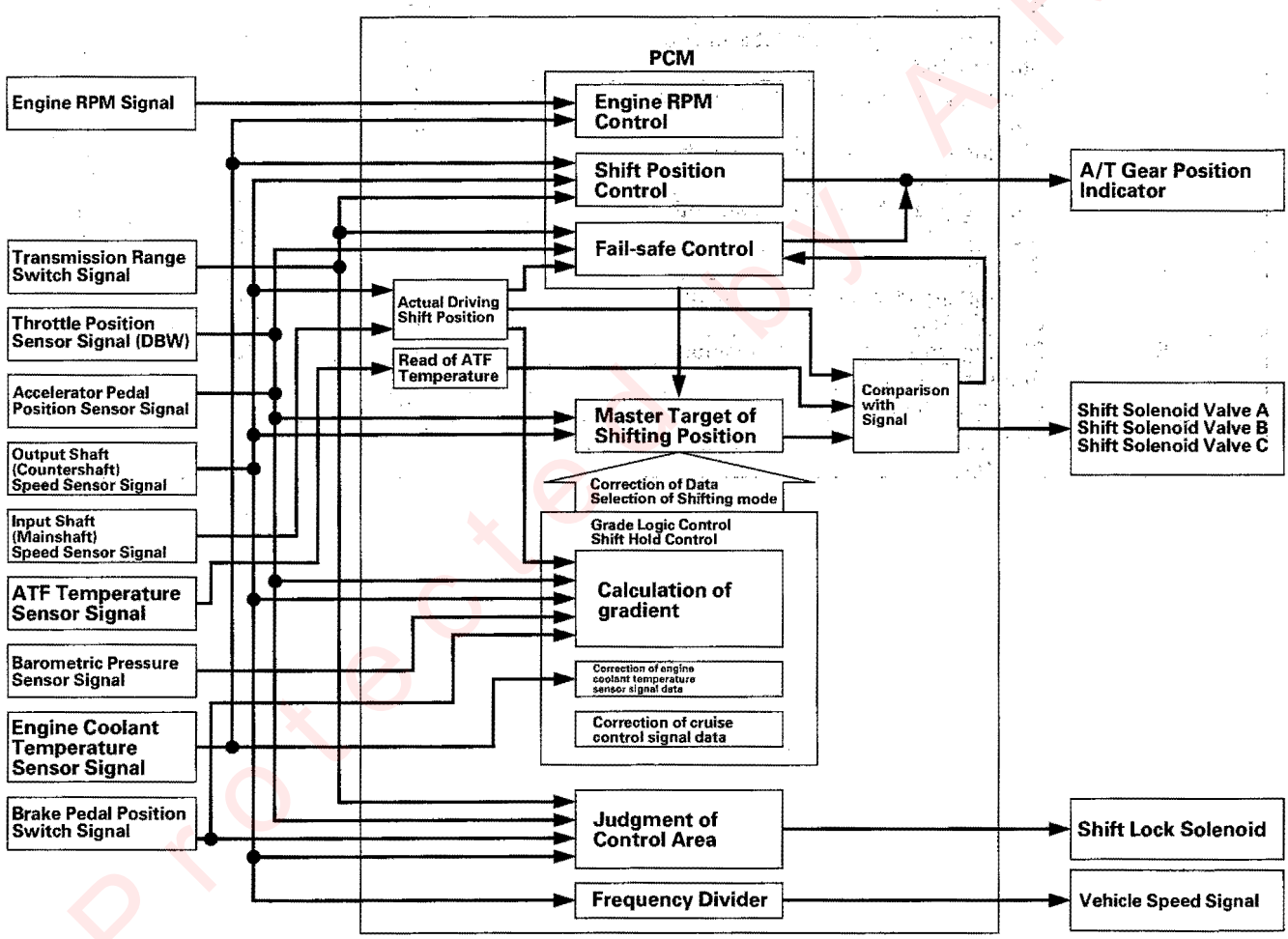

Protected by AR

(cont'd)

System Description (cont'd)

Electronic Control System (cont'd)

Shift Control (cont'd)

The PCM turns on and off the shift solenoid valves A, B, and C to control shifting of the transmission gears. The combination of driving signals to shift solenoid valves A, B, and C are shown in the table.

Position	Gear position	Shift solenoid valves		
		A	B	C
D	Shifting from the N position	OFF	ON	OFF
	Stays in 1st	ON	ON	ON
	Shifting gears between 1st and 2nd	ON	ON	ON
	Stays in 2nd	ON	ON	OFF
	Shifting gears between 2nd and 3rd	OFF	ON	OFF
	Stays in 3rd	OFF	ON	ON
	Shifting gears between 3rd and 4th	OFF	OFF	ON
	Stays in 4th	OFF	OFF	OFF
	Shifting gears between 4th and 5th	ON	OFF	OFF
	Stays in 5th	ON	OFF	ON
L	Stays in 1st	ON	ON	ON
	Shifting gears between 1st and 2nd	ON	ON	ON
	Stays in 2nd	ON	ON	OFF
R	Shifting from the P and N position	OFF	ON	ON
	Stays in reverse	OFF	ON	OFF
	Reverse inhibit	ON	ON	ON
P	Park	OFF	ON	OFF
N	Neutral	OFF	ON	OFF

Protected by AR

Grade Logic Control: Ascending Control
When the PCM determines that the vehicle is climbing a hill in the D position, the system extends the engagement area of 2nd gear, 3rd gear, and 4th gear to prevent the transmission from frequently shifting between 2nd and 3rd gears, between 3rd and 4th gears, and between 4th and 5th gears, so the vehicle can run smooth and have more power when needed.

NOTE: Shift schedules stored in the PCM between 2nd and 3rd gears, between 3rd and 4th gears, and between 4th and 5th gears, enable the PCM to automatically select the most suitable gear according to the magnitude of a gradient.

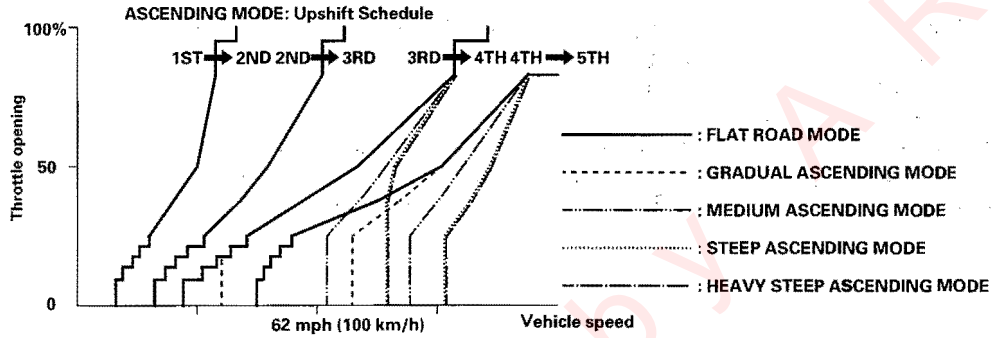

Grade Logic Control: Descending Control
When the PCM determines that the vehicle is going down a hill in the D position, the shift-up speed from 4th to 5th gear, 3rd to 4th gear, and from 2nd to 3rd (when the throttle is closed) becomes faster than the set speed for flat road driving to widen the 4th gear, 3rd gear, and 2nd gear driving areas. This, in combination with engine braking from the deceleration lock-up, achieves smooth driving when the vehicle is descending. There are three descending modes with different 4th gear driving areas, 3rd gear driving areas and 2nd gear driving areas according to the magnitude of a gradient stored in the PCM. When the vehicle is in 5th or 4th gear and you are decelerating while applying the brakes on a steep hill, the transmission will downshift to a lower gear. When you accelerate, the transmission will then return to a higher gear.

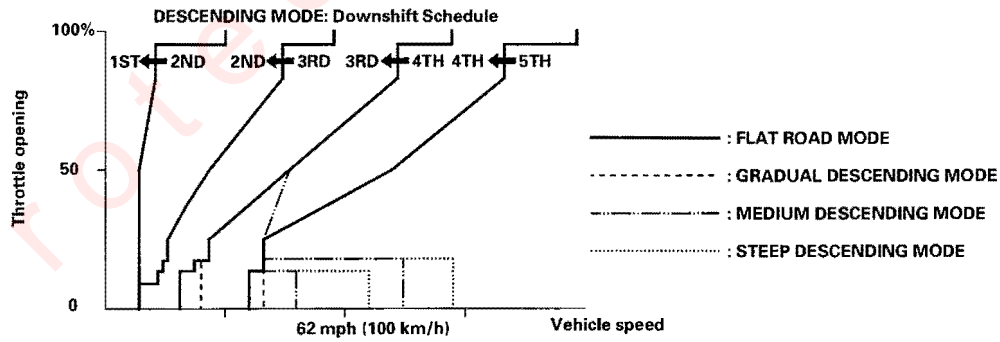

Protected by A R

(cont'd)

System Description (cont'd)

Electronic Control System (cont'd)

Deceleration Control
When the vehicle goes around a corner and needs to decelerate first and then accelerate, the PCM sets the data for deceleration control to reduce the number of times the transmission shifts. When the vehicle is decelerating from speeds above 27 mph (43 km/h), the PCM shifts the transmission from 5th or 4th to 2nd earlier than normal to cope with upcoming acceleration.

Shift Hold Control
When the vehicle is driven agressively on a winding road, the PCm will extend the engagement time of 3rd gear and 4th gear to prevent the transmission from frequently shifting between 3rd, 4th, and 5th grars. this allows the driver to have more control for both acceleration and deceleration.
The PCM monitors the avarage change in vehicle speed and throttle over time. when thease values exceed those for normal driving conditions, the shift-up from 3rd to 4th gear and 4th to 5th gear is delayed. This gives more control over power, and engine braking when the driver is driving agressivelyaround winding roads. The transmission will resume the normal shift-up pattern after the PCM determines that normal driving has resumed.

Protected by A R

Clutch Pressure Control

The PCM actuates the A/T clutch pressure control solenoid valves A, B, and C to control the clutch pressure. When shifting between lower and higher gears, the clutch pressure regulated by the A/T clutch pressure control solenoid valves A, B, and C engages and disengages the clutch smoothly.

The PCM receives input signals from the various sensors and switches, performs processing data, and outputs a current to the A/T clutch pressure control solenoid valves A, B, and C.

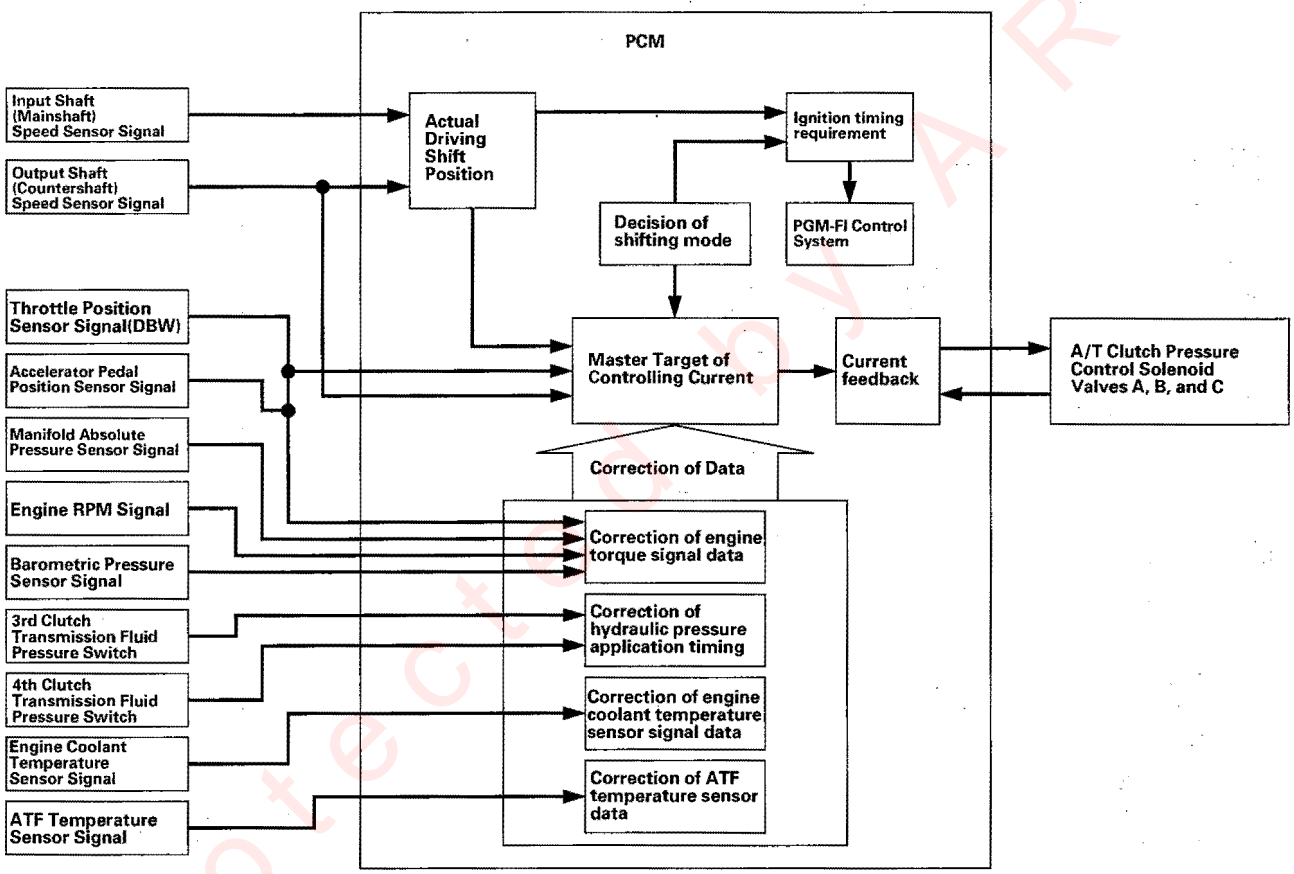

Protected by V A R

(cont'd)

System Description (cont'd)

Electronic Control System (cont'd)

Lock-up Control

The torque converter clutch solenoid valve controls the hydraulic pressure to switch the lock-up shift valve and lock-up ON and OFF. The PCM actuates the torque converter clutch solenoid valve and the A/T clutch pressure control solenoid valve ON, the condition of the lock-up starts. The A/T clutch pressure control solenoid valve C regulates and apply the hydraulic pressure to the lock-up control valve to control the amount of the lock-up.
The lock-up mechanism operates in the D position (2nd, 3rd, 4th, and 5th).

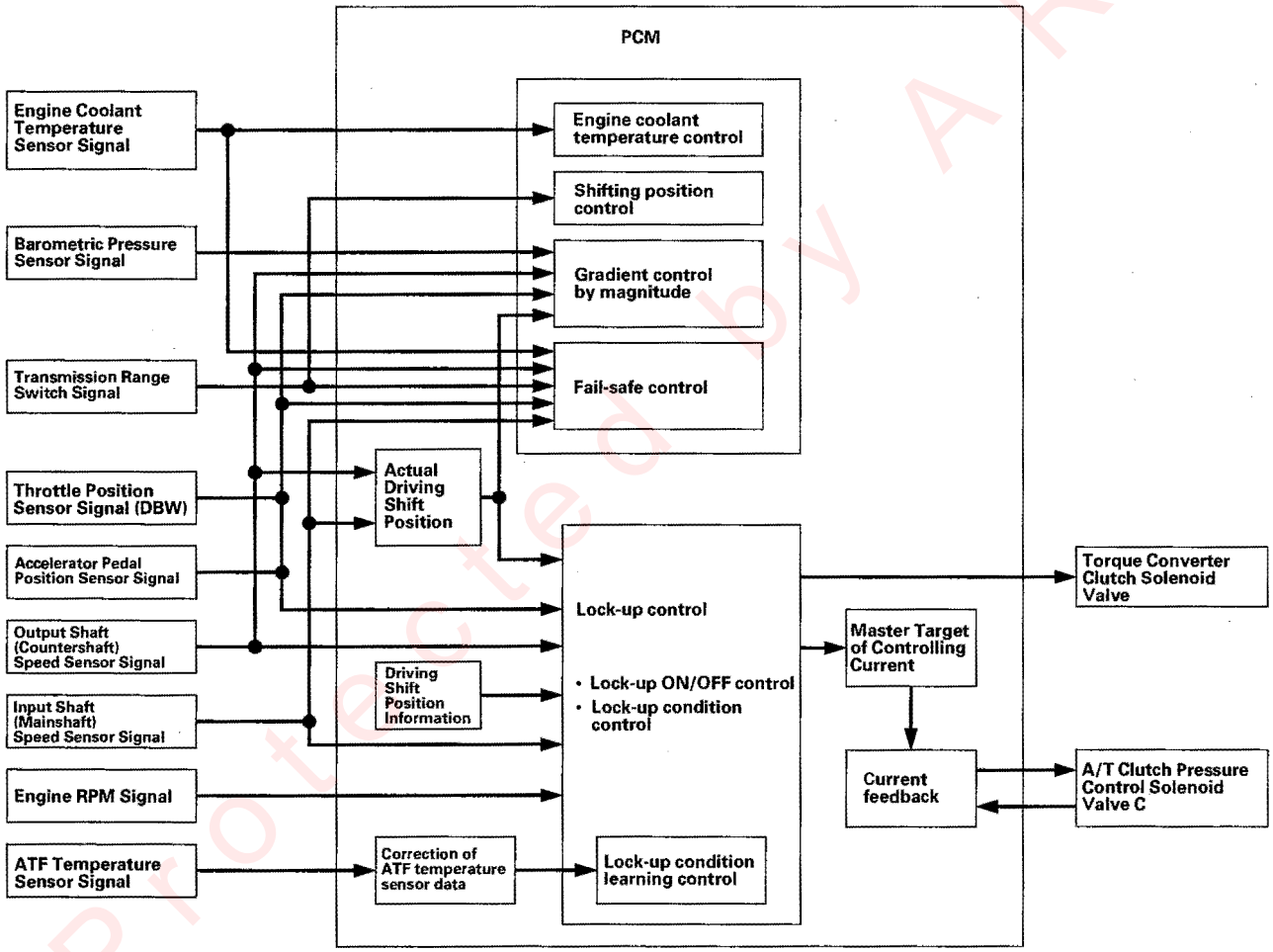

Protected by AR

PCM Electrical Connections

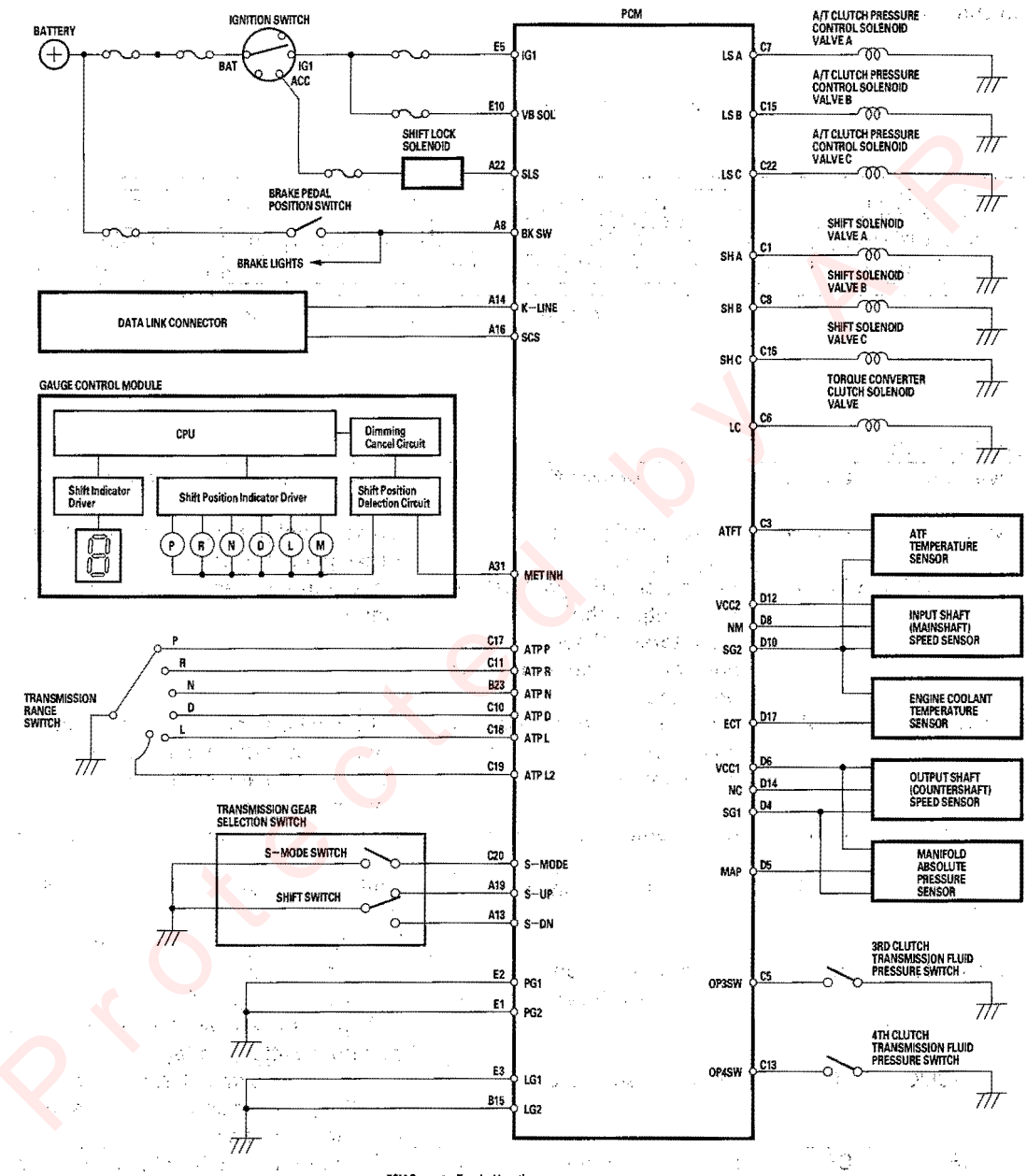

Protected by ER

(cont'd)

System Description (cont'd)

Electronic Control System (cont'd)

PCM Inputs and Outputs

PCM Connector Terminal Locations

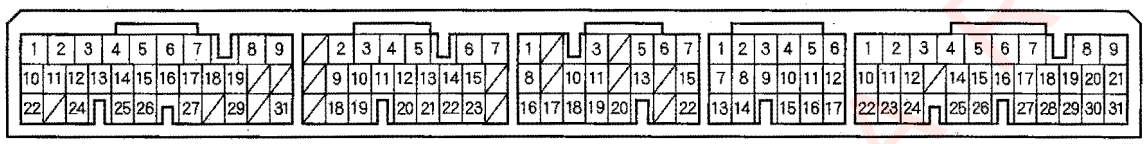

PCM CONNECTOR A (31P)

Terminal Number	Wire Color	Signal	Description	Measuring Conditions/Terminal Voltage
A8	WHT/BLK	BKSW	Brake pedal position switch signal input	Brake pedal pressed: Battery voltage Brake pedal released: 0 V
A11	BLU/WHT	VSSOUT	Vehicle speed signal detected from output shaft (countershaft) speed sensor and sent to speedometer and odometer	Depending on vehicle speed: Pulsing signal
A13	WHT/BLU	S-DN	Transmission gear selection switch downshift switch signal input	In M position and shift lever pushed toward downshift position: 0 V In M position and shift lever in neutral position: Battery voltage
A14	BLU	K-LINE	Communication line PCM-to-DLC	With ignition switch ON (II): About 2.5 V
A16	BRN	SCS	Detects service check signal	With the SCS shorted with the HDS: About 0 V With the SCS open: About 5 V
A19	BRN/WHT	S-UP	Transmission gear selection switch upshift switch signal input	In M position and shift lever pushed toward upshift position: 0 V In M position and shift lever in neutral position: Battery voltage
A22	YEL/BLK	SLS	Shift lock solenoid control	With ignition switch ON (II), in the P position, brake pedal pressed, and accelerator released: 0 V
A26	RED	CAN L	F-CAN communication with network	With ignition switch ON (II): Pulsing signal
A31	LT GRN/RED	MET INH	A/T gear position indicator control signal output	With ignition switch ON (II): About 10 V

Protected by

PCM CONNECTOR B (24P)

Terminal Number	Wire Color	Signal	Description	Measuring Conditions/Terminal Voltage
B15	BRN/YEL	LG2	Ground	Less than 1 V at all times
B23	RED/BLK	ATP N	Transmission range switch N position signal input	In the N position: 0 V In other than the N position: Battery voltage

PCM CONNECTOR C (22P)

Terminal Number	Wire Color	Signal	Description	Measuring Conditions/Terminal Voltage
C1	BLU/YEL	SH A	Shift solenoid valve A control	Battery voltage in these positions: • 1st, 2nd, 5th gears in D and M • L 0 V in these positions: • 3rd, 4th gears in D and M • P, R, and N
C3	BLU/YEL	ATFT	ATF temperature sensor signal input	With ignition switch ON (II): 0.2—4.0 V With ignition switch OFF: 0 V
C5	BLU/WHT	OP3SW	3rd clutch transmission fluid pressure switch signal input	With ignition switch ON (II): • Without 3rd clutch pressure: 5 V • With 3rd clutch pressure: About 0 V
C6	YEL	LC	Torque converter clutch solenoid valve control	During lock-up condition: Battery voltage During no lock-up condition: 0 V
C7	RED	LS A	A/T clutch pressure control solenoid valve A control	With ignition switch ON (II): Pulsing signal
C8	GRN/WHT	SH B	Shift solenoid valve B control	Battery voltage in these positions: • L • 1st, 2nd, 3rd gears in D and M • P, R, and N 0 V in these positions: • 4th, 5th gears in D and M
C10	YEL/GRN	ATP D	Transmission range switch D position signal input	In the D position: 0 V In other than the D position: Battery voltage
C11	WHT	ATP R	Transmission range switch R position signal input	In the R position: 0 V In other than the R position: Battery voltage
C13	BLU/YEL	OP4SW	4th clutch transmission fluid pressure switch signal input	With ignition switch ON (II): • Without 4th clutch pressure: 5 V • With 4th clutch pressure: About 0 V

Protected by FAR

(cont'd)

System Description (cont'd)

Electronic Control System (cont'd)

PCM Inputs and Outputs (cont'd)

PCM Connector Terminal Locations

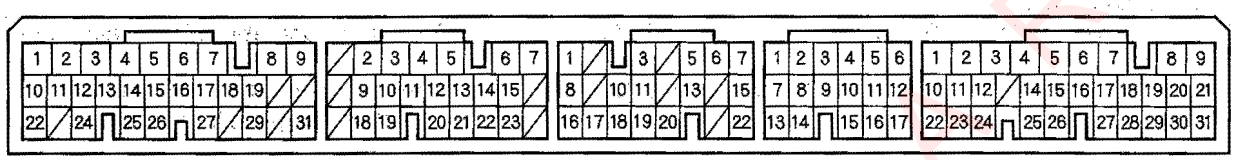

PCM CONNECTOR C (22P)

Terminal Number	Wire Color	Signal	Description	Measuring Conditions/Terminal Voltage
C15	BRN/WHT	LS B	A/T clutch pressure control solenoid valve B control	With ignition switch ON (II): Pulsing signal
C16	GRN	SH C	Shift solenoid valve C control	Battery voltage in these positions: • L • 1st, 3rd, 5th gears in D and M 0 V in these positions: • 2nd, 4th gears in D and M • P, R, and N
C17	BLU/BLK	ATP P	Transmission range switch P position signal input	In the P position: 0 V In other than the P position: Battery voltage
C18	RED	ATP L	Transmission range switch L position signal input	In the L position: 0 V In other than the L position: Battery voltage
C19	BLU/YEL	ATP L2	Transmission range switch L position signal input	In the L position: 0 V In other than the L position: Battery voltage
C20	ORN	S-MODE	Transmission gear selection switch S mode switch signal input	In M position: 0 V In other than M position: Battery voltage
C22	GRN/RED	LS C	A/T clutch pressure control solenoid valve C control	With ignition switch ON (II): Pulsing signal

Protected by FSR

PCM CONNECTOR D (17P)

Terminal Number	Wire Color	Signal	Description	Measuring Conditions/Terminal Voltage
D4	GRN/WHT	SG1	Sensor ground	Less than 1 V at all times
D6	YEL/RED	VCC1	Power supply for sensors	With ignition switch ON (II): 5 V
D8	RED	NM	Input shaft (mainshaft) speed sensor signal input	With ignition switch ON (II): 0 V or about 5 V With engine at idling in the N position: Pulsing signal (0—5 V)
D10	GRN/YEL	SG2	Sensor ground	Less than 1 V at all times
D12	YEL/BLU	VCC2	Power supply for sensors	With ignition switch ON (II): 5 V With ignition switch OFF: 0 V
D14	BLU	NC	Output shaft (countershaft) speed sensor signal input	With ignition switch ON (II): 0 V or about 5 V With driving: Pulsing signal (0—5 V)

PCM CONNECTOR E (31P)

Terminal Number	Wire Color	Signal	Description	Measuring Conditions/Terminal Voltage
E1	BLK	PG2	Ground	Less than 1 V at all times
E2	BLK	PG1	Ground	Less than 1 V at all times
E3	BRN/YEL	LG1	Ground	Less than 1 V at all times
E5	BLK/GRN	IG1	Power supply circuit	With ignition switch ON (II): Battery voltage With ignition switch OFF: 0 V
E10	BLK/YEL	VBSOL	Power supply circuit for solenoid valves	With ignition switch ON (II): Battery voltage With ignition switch OFF: 0 V

Protected by APR

System Description (cont'd)

Hydraulic Controls

The valve body includes the main valve body, the regulator valve body, the servo body, the top accumulator body, and the accumulator body. The ATF pump is driven by splines on the left end of the torque converter which is attached to the engine. Fluid flows through the regulator valve to maintain specified pressure through the main valve body to the manual valve, directing pressure to each of the clutches. The shift solenoid valves A and C are mounted on the outside of the torque converter housing. The shift solenoid valve B and the torque converter clutch solenoid valve are mounted on the torque converter housing. The A/T clutch pressure control solenoid valves A and B, and the A/T clutch pressure control solenoid valve C are mounted on the transmission housing.

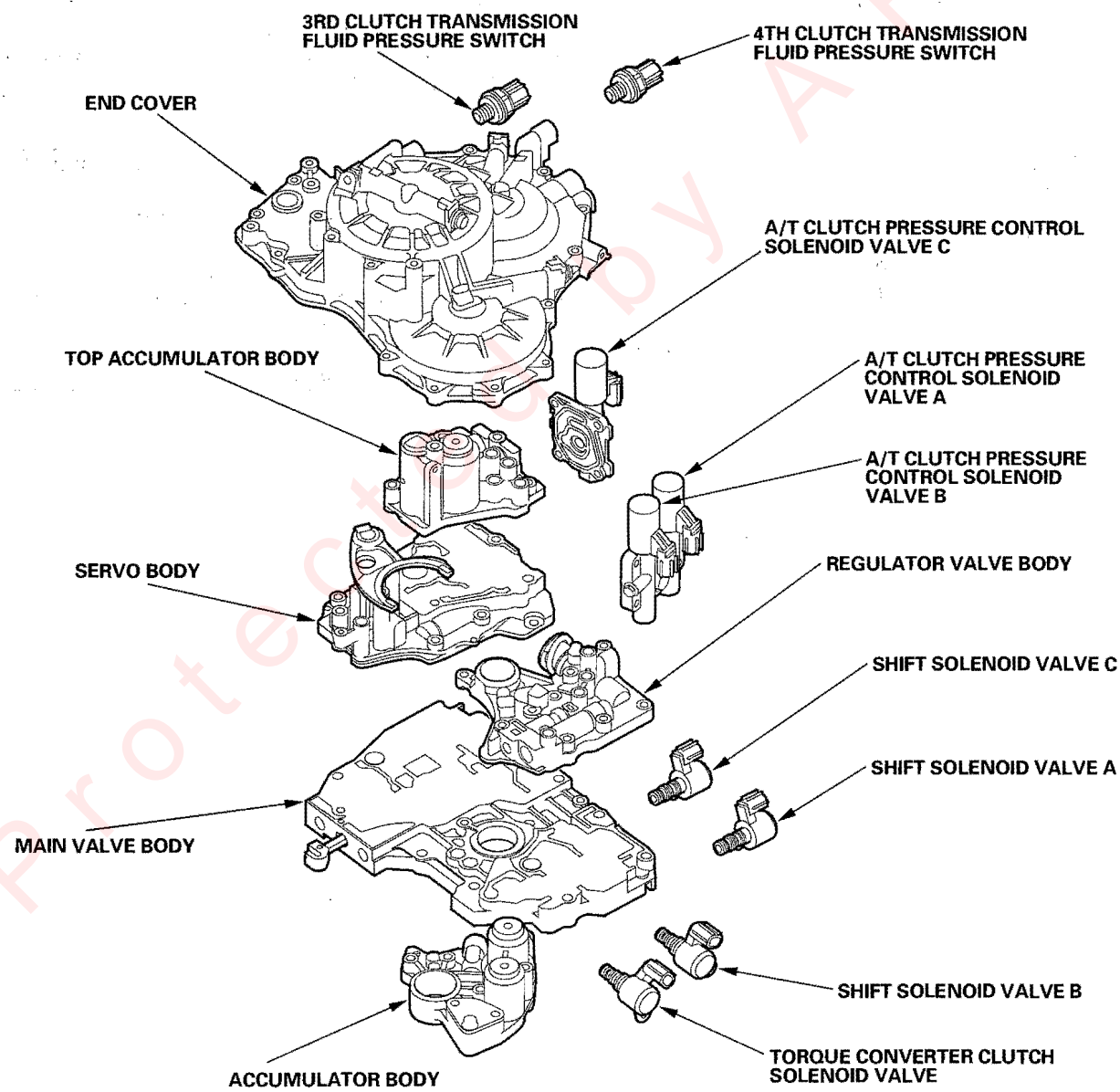

Protected by AR

Main Valve Body

The main valve body contains the manual valve, the modulator valve, the shift valve C, the shift valve D, the servo control valve, the cooler check valve, the torque converter check valve, the reverse CPC valve, the lock-up shift valve, the relief valve, the kick-down valve, the kick-down short valve, and the ATF pump gears. The primary function of the main valve body is to switch fluid pressure on and off and to control hydraulic pressure going to the hydraulic control system.

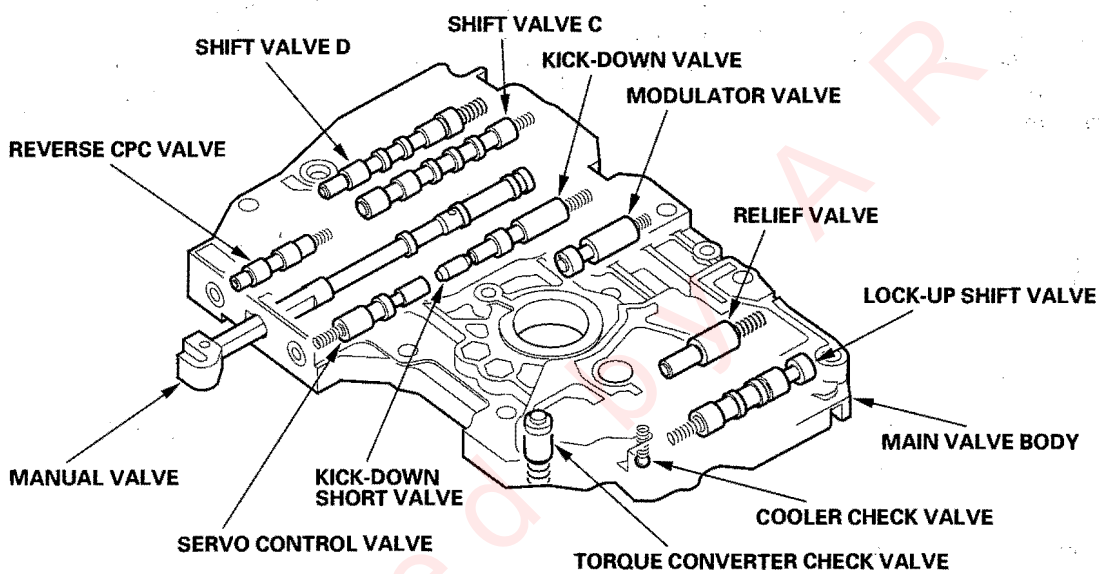

Regulator Valve Body

The regulator valve body is located on the main valve body. The regulator valve body contains the regulator valve, the lock-up timing valve, and the lock-up control valve.

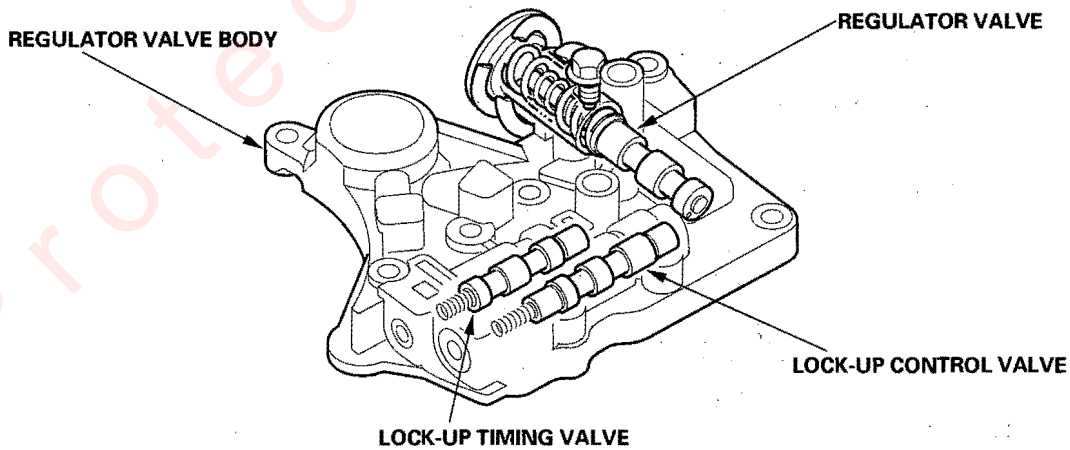

(cont'd)

Protected by AR

System Description (cont'd)

Hydraulic Controls (cont'd)

Regulator Valve

The regulator valve maintains constant hydraulic pressure from the ATF pump to the hydraulic control system, while also furnishing fluid to the lubricating system and torque converter. Fluid from the ATF pump flows through B and B'. Fluid entering from B flows through the valve orifice to the A cavity. This pressure of the A cavity pushes the regulator valve to the spring side, and this movement of the regulator valve uncovers the fluid port to the torque converter and the relief valve. The fluid flows out to the torque converter and the relief valve, and the regulator valve returns under spring force. According to the level of the hydraulic pressure through B, the position of the regulator valve changes, and the amount of fluid from B' through the torque converter changes. This operation is continued, maintaining the line pressure.

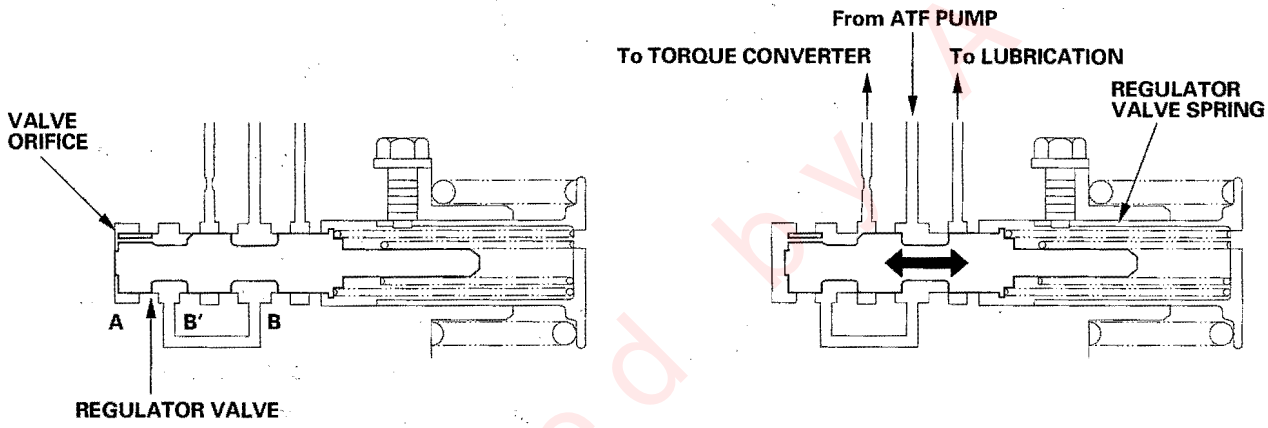

Increases in hydraulic pressure according to torque are performed by the regulator valve using stator torque reaction. The stator shaft is splined to the stator in the torque converter, and its arm end contacts the regulator spring cap. When the vehicle is accelerating or climbing (torque converter range), stator torque reaction acts on the stator shaft, and the stator arm pushes the regulator spring cap in the direction of the arrow in proportion to the reaction. The stator reaction spring compresses, and the regulator valve moves to increase the line pressure which is regulated by the regulator valve. The line pressure reaches its maximum when the stator torque reaction reaches its maximum.

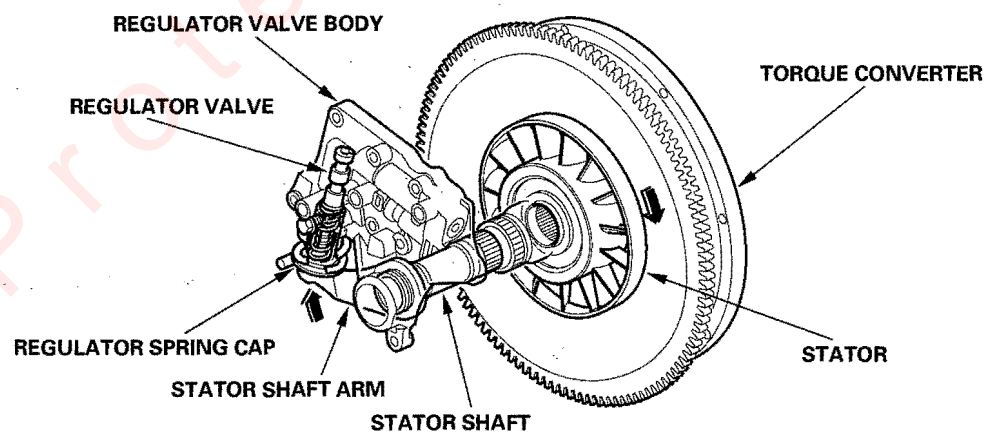

Protected by

Servo Body

The servo body is on the main valve body. It contains the servo valve, shift valve A, shift valve B, and CPC valves A and B.

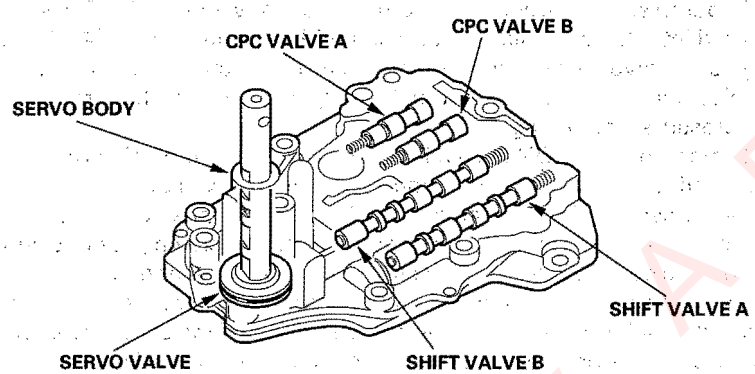

Top Accumulator Body

The top accumulator body contains shift valve E, CPC valve C, 4th/1st-hold accumulator, and 5th accumulator.

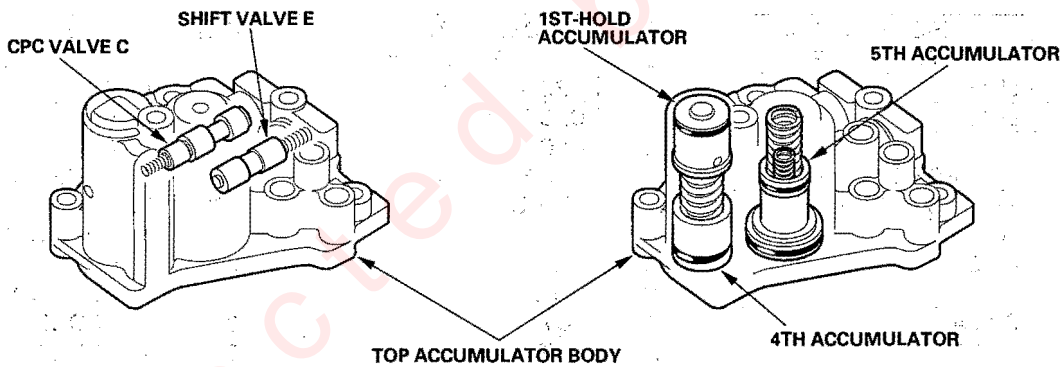

Accumulator Body

The accumulator body is on the torque converter housing, next to the main valve body. It contains the 1st and 2nd accumulators and the lubrication check valve.

3rd Accumulator

The 3rd accumulator is in the end cover.

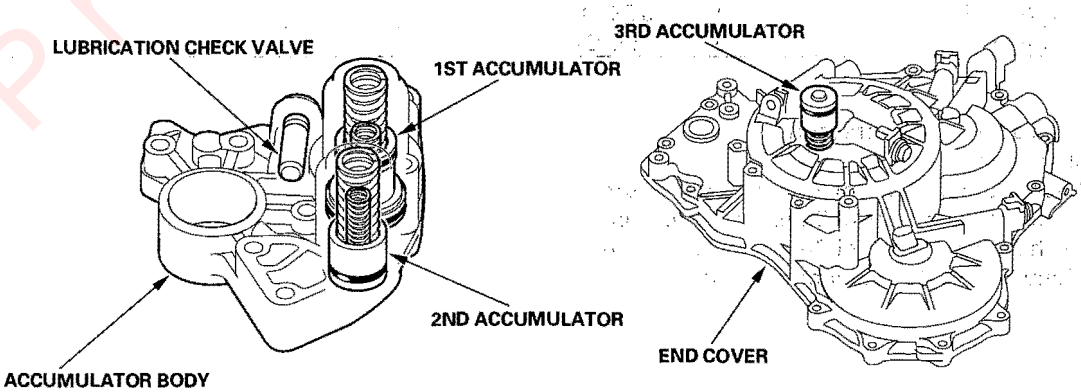

Protected by A R

System Description (cont'd)

Hydraulic Flow

Distribution of Hydraulic Pressure

As the engine runs, the ATF pump starts to operate. Automatic transmission fluid (ATF) is drawn through the ATF strainer (filter) and discharged into the hydraulic circuit. Then, ATF flowing from the ATF pump becomes line pressure that's regulated by the regulator valve. Torque converter pressure from the regulator valve enters the torque converter through the lock-up shift valve and it is discharged from the torque converter. The torque converter check valve prevents torque converter pressure from rising.

The PCM controls the shift solenoid valves ON and OFF, and the shift solenoid valves control shift solenoid pressure to the shift valves. Applying shift solenoid pressure to the shift valves moves the position of the shift valve, and switches the port of hydraulic pressure. The PCM also controls A/T clutch pressure control solenoid valves A and B. The A/T clutch pressure control solenoid valves A and B regulate the A/T clutch pressure control solenoid pressure and apply the A/T clutch pressure control solenoid pressure to CPC valves A and B.

When shifting between upper gear and lower gear, the clutch is engaged by pressure from the CPC pressure mode. The PCM controls one of the shift solenoid valves to move the position of the shift valve. This movement switches the port of the CPC and line pressure. Line pressure is then applied to the clutch, and the CPC pressure is intercepted. Engaging the clutch with line pressure happens after CPC pressure mode has completed.

Hydraulic pressure at the ports is as follows:

PORT NO.	DESCRIPTION OF PRESSURE	PORT NO.	DESCRIPTION OF PRESSURE	PORT NO.	DESCRIPTION OF PRESSURE
1	LINE	5N	CPC A or LINE	56	LS A
2	LINE	5D	CPC B or LINE	57	LS B
3	LINE	5G	CPC B or LINE	58	LS C
3'	REVERSE CPC or LINE	5K	CPC B or LINE	90	TORQUE CONVERTER
3''	REVERSE CPC or LINE	6	MODULATE	90'	TORQUE CONVERTER
4	LINE	SA	SH A	91	TORQUE CONVERTER
4'	LINE	SB	SH B	91'	TORQUE CONVERTER
4''	LINE	SC	SH C	92	TORQUE CONVERTER
4A	CPC A	LA	LC A	93	ATF COOLER
4B	CPC B	9	LINE	94	TORQUE CONVERTER
4C	CPC C	10	1ST CLUTCH	95	LUBRICATION
5B	CPC A	15	1ST-HOLD CLUTCH	95'	LUBRICATION
5C	CPC B	20	2ND CLUTCH	96	TORQUE CONVERTER
5H	CPC B	25	LINE	99	SUCTION
5J	CPC B	30	3RD CLUTCH	X	DRAIN
5A	CPC A or LINE	40	4TH CLUTCH	HX	HIGH POSITION DRAIN
5E	CPC A or LINE	50	5TH CLUTCH	AX	AIR DRAIN
5F	CPC A or LINE	51	5TH CLUTCH		
5M	CPC A or LINE	55	CPC C or LINE		

NOTE:
- CPC: Clutch Pressure Control pressure
- SH: Shift Solenoid pressure
- LS A: A/T Clutch Pressure Control Solenoid A pressure
- LS B: A/T Clutch Pressure Control Solenoid B pressure
- LS C: A/T Clutch Pressure Control Solenoid C pressure
- LC: Torque Converter Clutch Solenoid pressure

Protected by A.R.

N Position

The PCM controls the shift solenoid valves. The conditions of the shift solenoid valve and positions of the shift valve are as follows:

- Shift solenoid valve A is turned OFF, and shift valve A moves to the left side.
- Shift solenoid valve B is turned ON, and shift valve B stays on the right side.
- Shift solenoid valve C is turned OFF, and shift valve C stays on the left side.

Line pressure (1) passes through the manual valve and becomes line pressure (25). Line pressure (25) stops at shift valve D. Line pressure (1) also flows to the modulator valve and becomes modulator pressure (6). Modulator pressure (6) flows to the shift solenoid valves and the A/T clutch pressure control solenoid valves. Under this condition, hydraulic pressure is not applied to the clutches.

NOTE: When used, "left" or "right" indicates direction on the hydraulic circuit.

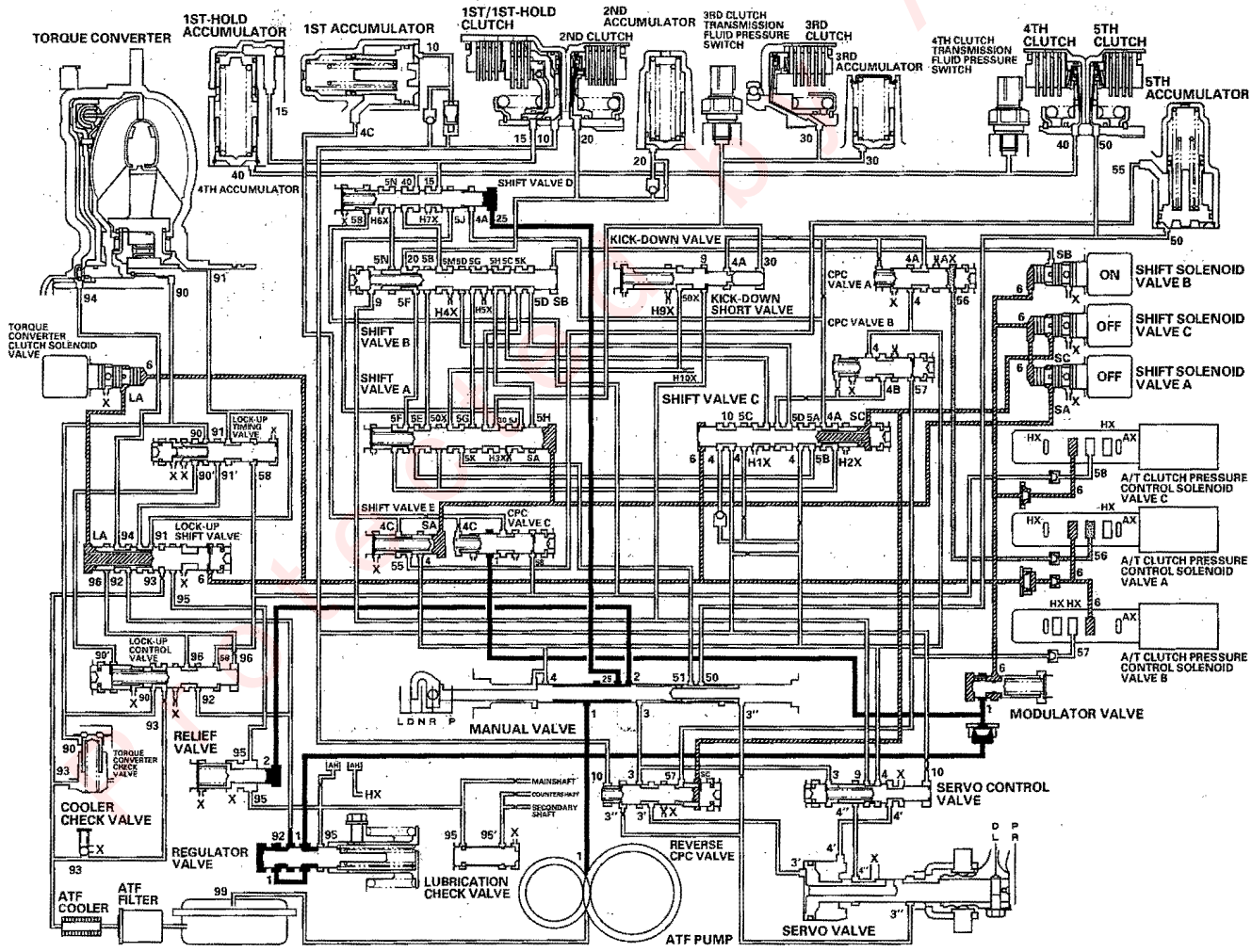

(cont'd)

System Description (cont'd)

Hydraulic Flow (cont'd)

D Position: 1st gear shifting from the N position

Shift solenoid valves remain the same as in the N position when shifting to the D position from the N position. The manual valve is moved to the D position, and switches the port of line pressure (4) leading to shift valve C and CPC valve B. Line pressure (4) flows to the 1st clutch via the orifice. Line pressure (1) becomes CPC C pressure (4C) at CPC valve C, then goes to the 1st accumulator back side. Line pressure (4) also becomes the CPC B pressure (4B) at the CPC B valve. CPC B pressure goes to the 3rd clutch, via the shift valves C, B, and A, and the 3rd clutch is engaged. The 1st clutch is engaged gently when shifting to the D position from the N position.

NOTE: When used, "left" or "right" indicates direction on the hydraulic circuit.

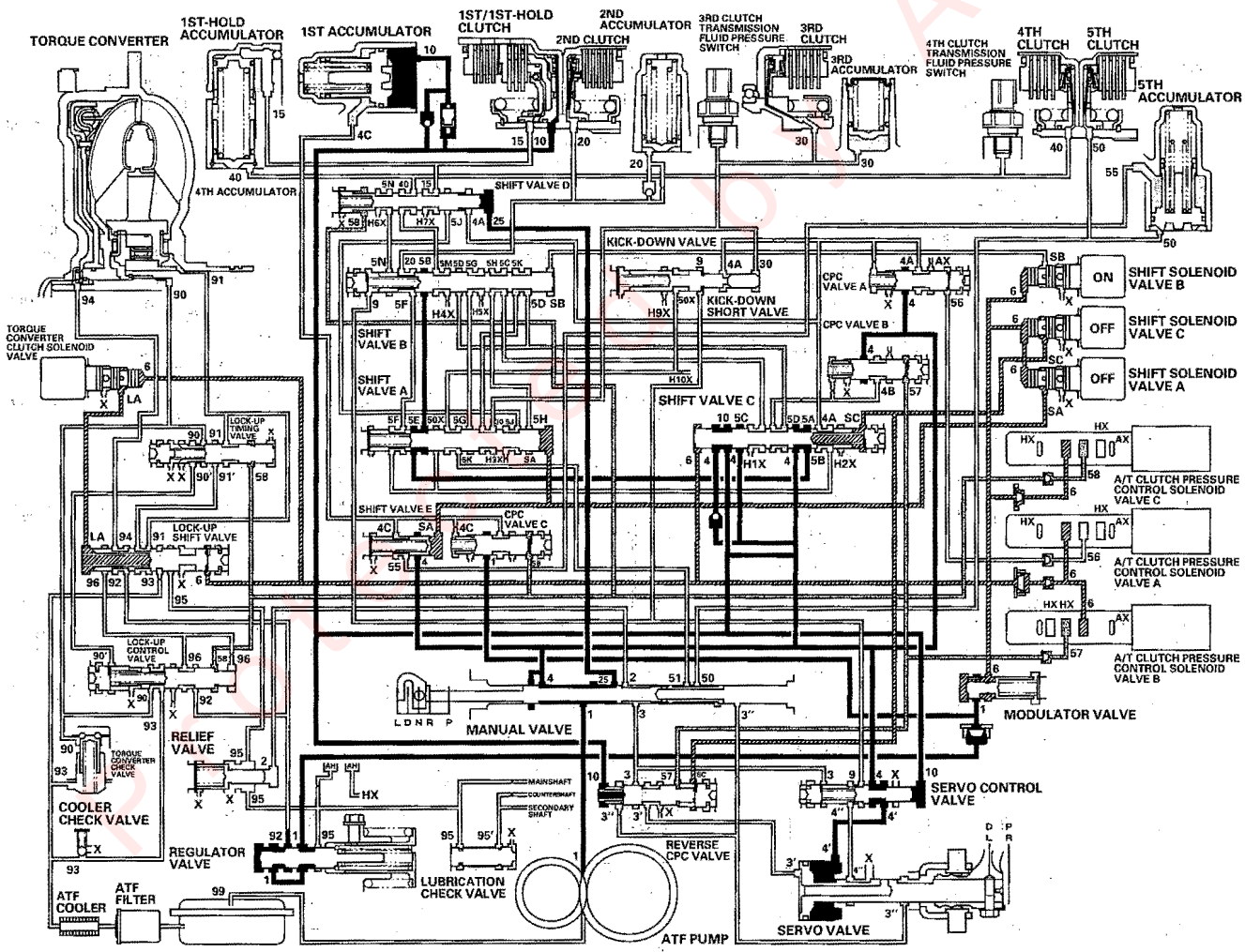

D Position: Driving in 1st gear

The PCM turns shift solenoid valves A and C ON, and shift solenoid valve B stays ON. SH A pressure (SA) in the right side of shift valves A and E is released, and shift valves A and E are moved to the right side. SH C pressure (SC) in the right side of shift valve C is released, and modulator pressure (6) is applied to the left side of shift valve C. Shift valve C is moved to the right side. These valve movements release CPC C pressure (4C) from the back of the 1st accumulator and the 3rd clutch, and the 1st clutch is engaged securely.

NOTE: When used, "left" or "right" indicates direction on the hydraulic circuit.

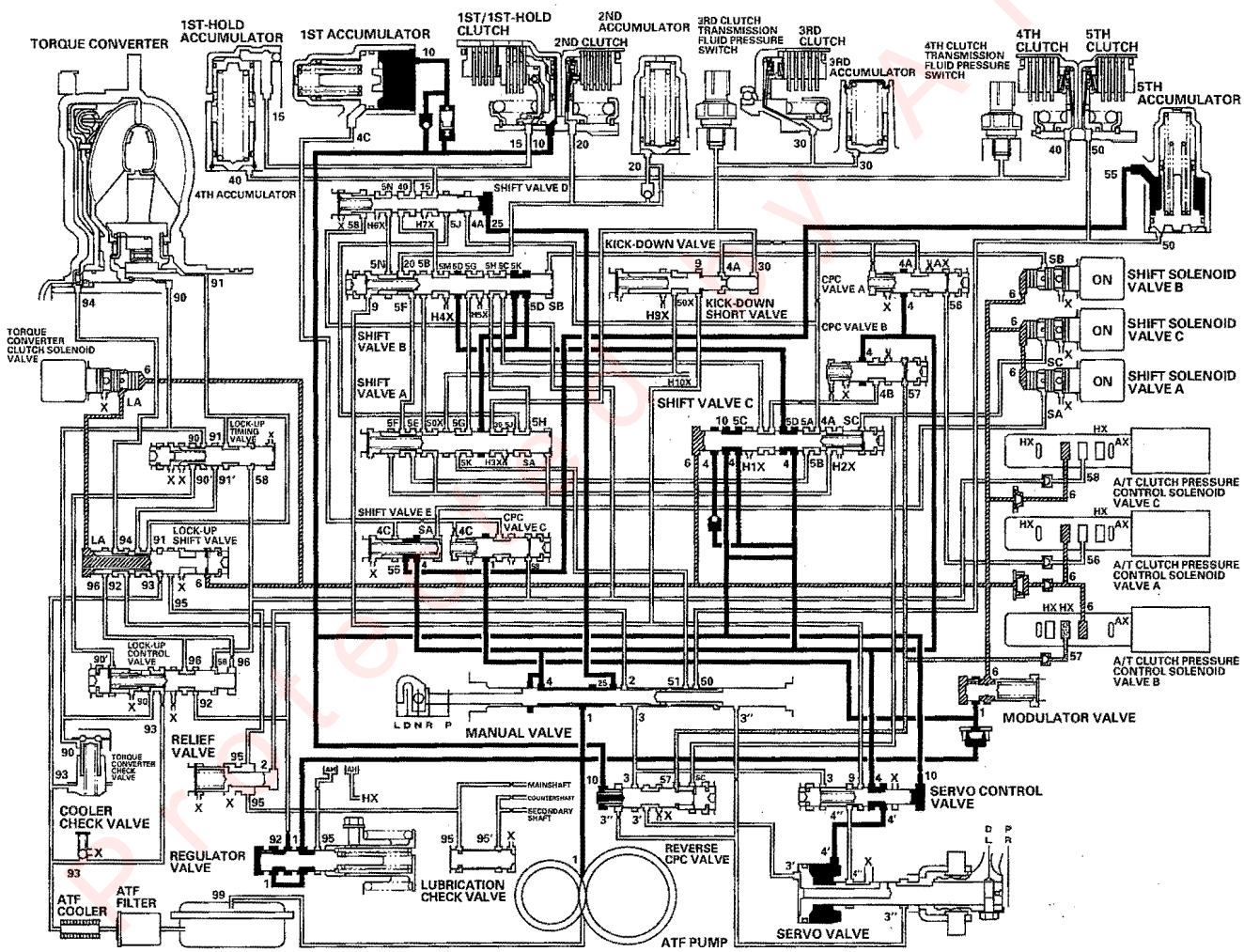

Proprietary

(cont'd)

System Description (cont'd)

Hydraulic Flow (cont'd)

D Position: Shifting between 1st gear and 2nd gear

As the speed of the vehicle reaches the prescribed value, the PCM controls the A/T clutch pressure control solenoid valves. LS B pressure (57) in the right side of CPC valve B is released, and LS A pressure (56) is applied to the right side of CPC valve A. Line pressure (4) becomes CPC A pressure (4A) at CPC valve A, and CPC A pressure passes through shift valves C, A, and B, to become 2nd clutch pressure. The 2nd clutch is engaged with CPC pressure, and the 1st clutch is also engaged. No power is transmitted because of the one-way clutch.

NOTE: When used, "left" or "right" indicates direction on the hydraulic circuit.

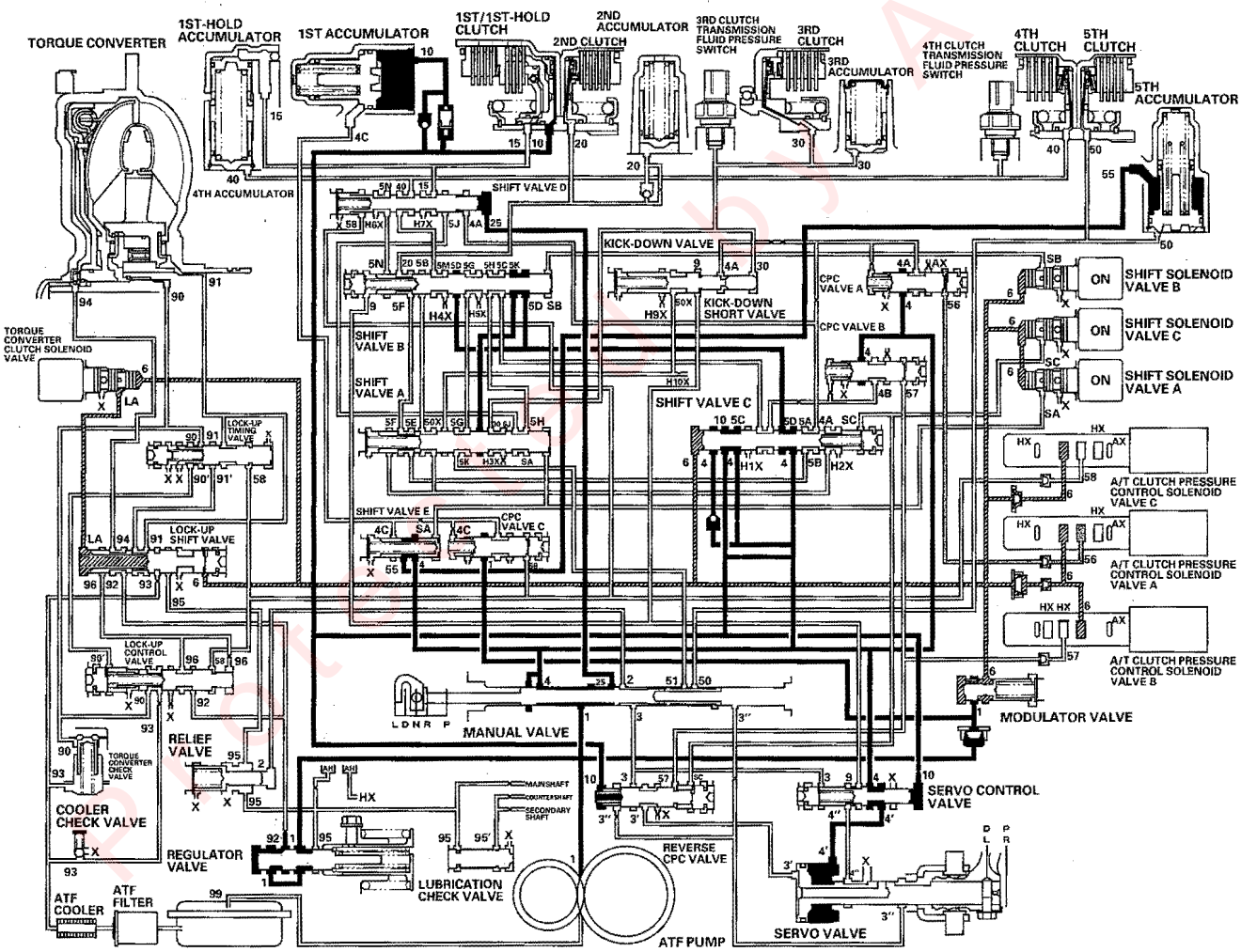

D Position: Driving in 2nd gear

The PCM turns shift solenoid valve C OFF, and shift solenoid valves A and B stays ON. Shift solenoid valve C is turned OFF, and SH C pressure (SC) is applied to the right side of shift valve C. Then shift valve C is moved to the left side to switch the line pressure port and CPC pressure port. The 2nd clutch pressure is changed to line pressure mode, and the 2nd clutch is engaged securely. The 1st clutch is also engaged. No power is transmitted because of the one-way clutch.

NOTE: When used, "left" or "right" indicates direction on the hydraulic circuit.

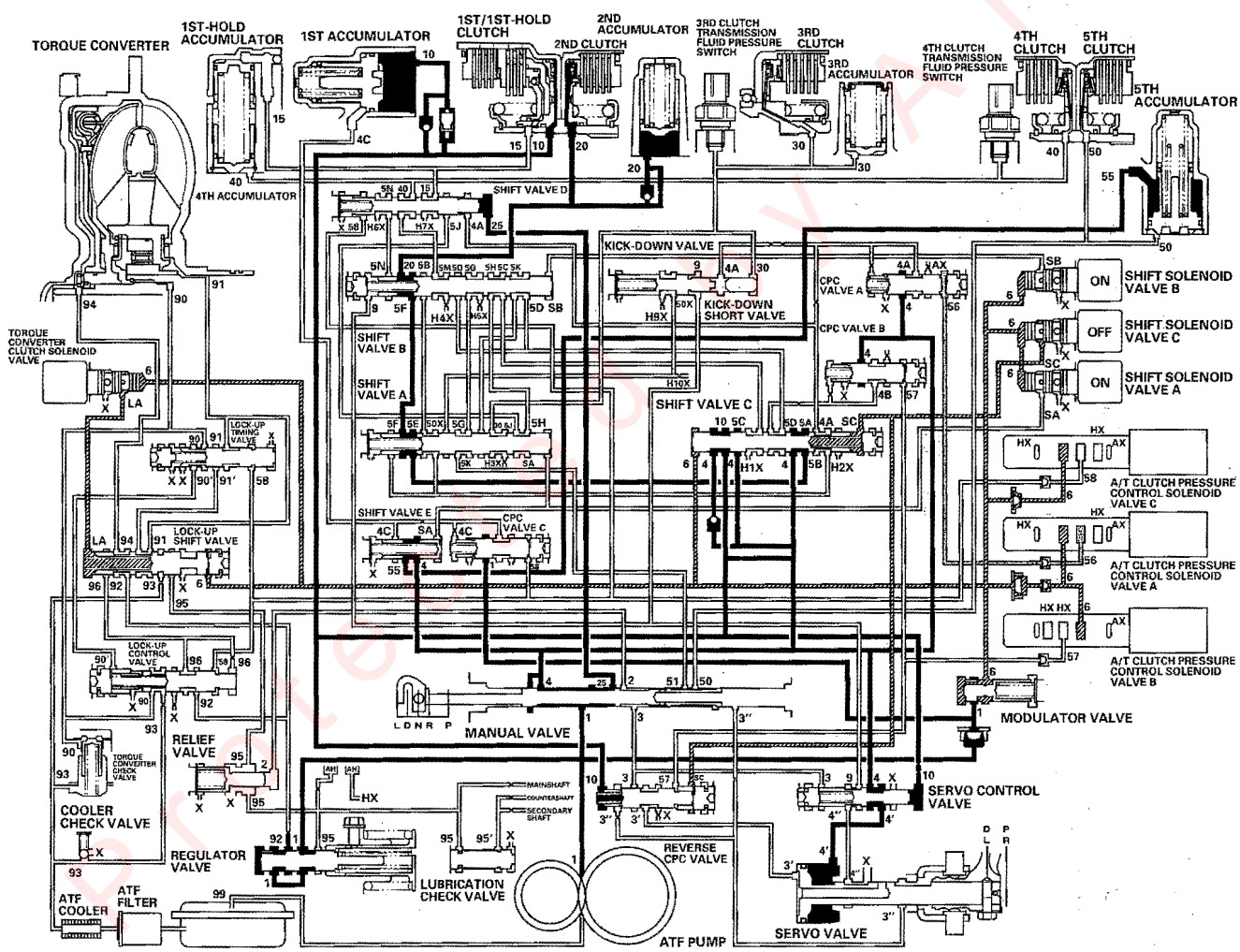

(cont'd)

System Description (cont'd)

Hydraulic Flow (cont'd)

D Position: Shifting between 2nd gear and 3rd gear

As the speed of the vehicle reaches the prescribed value, the PCM turns shift solenoid valve A OFF. The PCM also controls the A/T clutch pressure control solenoid valve B to apply LS B pressure (57) to CPC valve B. Shift solenoid valve B stays ON, and C stays OFF. Shift solenoid valve A is turned OFF, and SH A pressure (SA) is applied to the right side of shift valves A and E. Then shift valves A and E are moved to the left side to switch the line pressure port and CPC pressure port. Line pressure (4) becomes CPC A pressure (4A) at CPC valve A, and becomes CPC B pressure (4B) at CPC valve B. CPC B pressure (4B) becomes 3rd clutch pressure (30) at shift valve A via shift valves C and B, and flows to the 3rd clutch. The 2nd clutch pressure is changed to CPC pressure mode by switching the position of shift valve A. The 1st clutch is also engaged. No power is transmitted because of the one-way clutch.

NOTE: When used, "left" or "right" indicates direction on the hydraulic circuit.

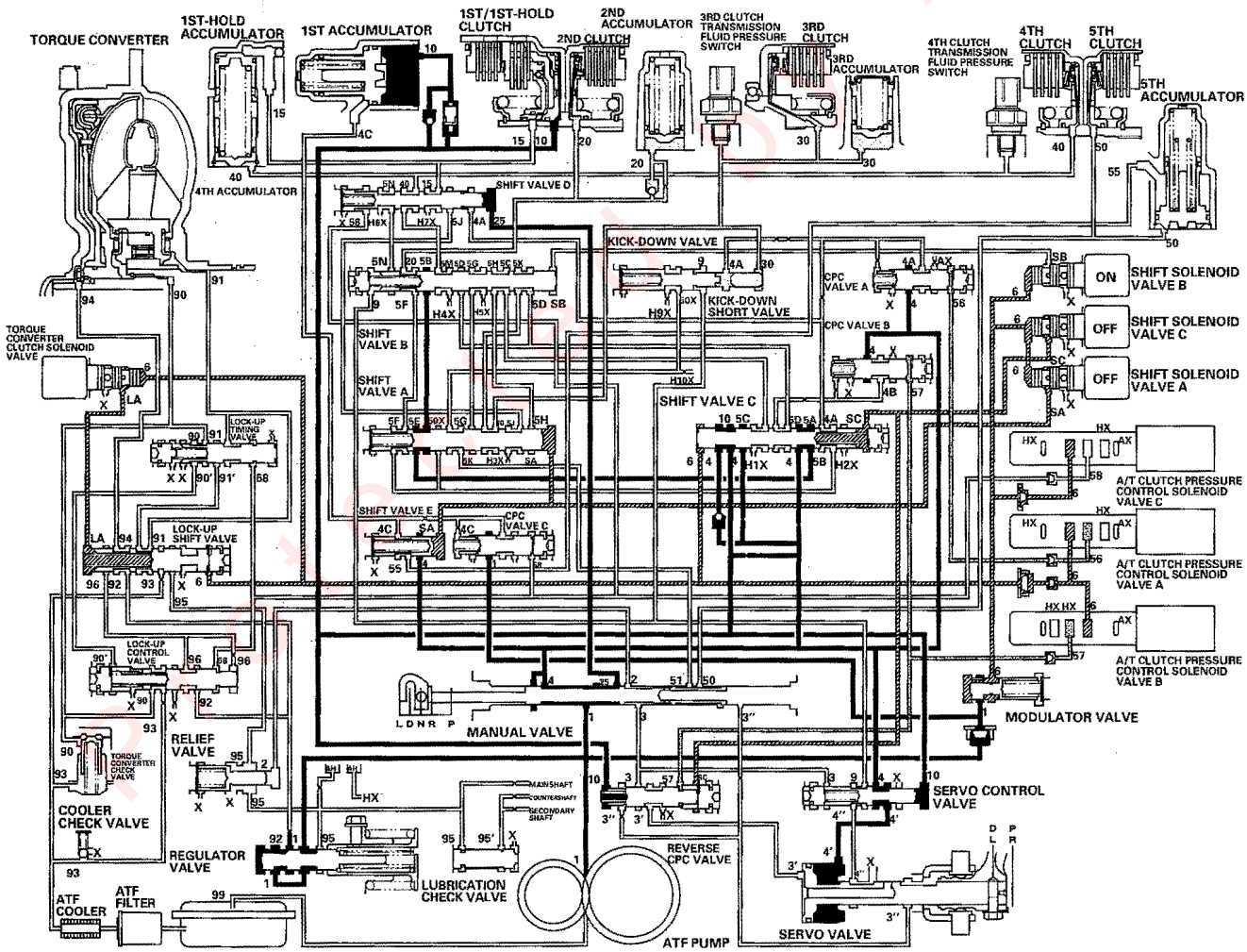

D Position: Driving in 3rd gear

The PCM turns shift solenoid valve C ON, and controls A/T clutch pressure control solenoid valve A to release LS A pressure (56) in CPC valve A. Shift solenoid valve A stays OFF, and B stays ON. Releasing LS A pressure (56) in CPC valve A releases CPC A pressure in the 2nd clutch pressure circuit. Shift solenoid valve C is turned ON, and SH C pressure (SC) in the right side of shift valve C is released. Then shift valve C is moved to the right side to switch the line pressure port and CPC pressure port. The 3rd clutch pressure is changed to line pressure mode, and the 3rd clutch is engaged securely. The 1st clutch is also engaged. No power is transmitted because of the one-way clutch.

NOTE: When used, "left" or "right" indicates direction on the hydraulic circuit.

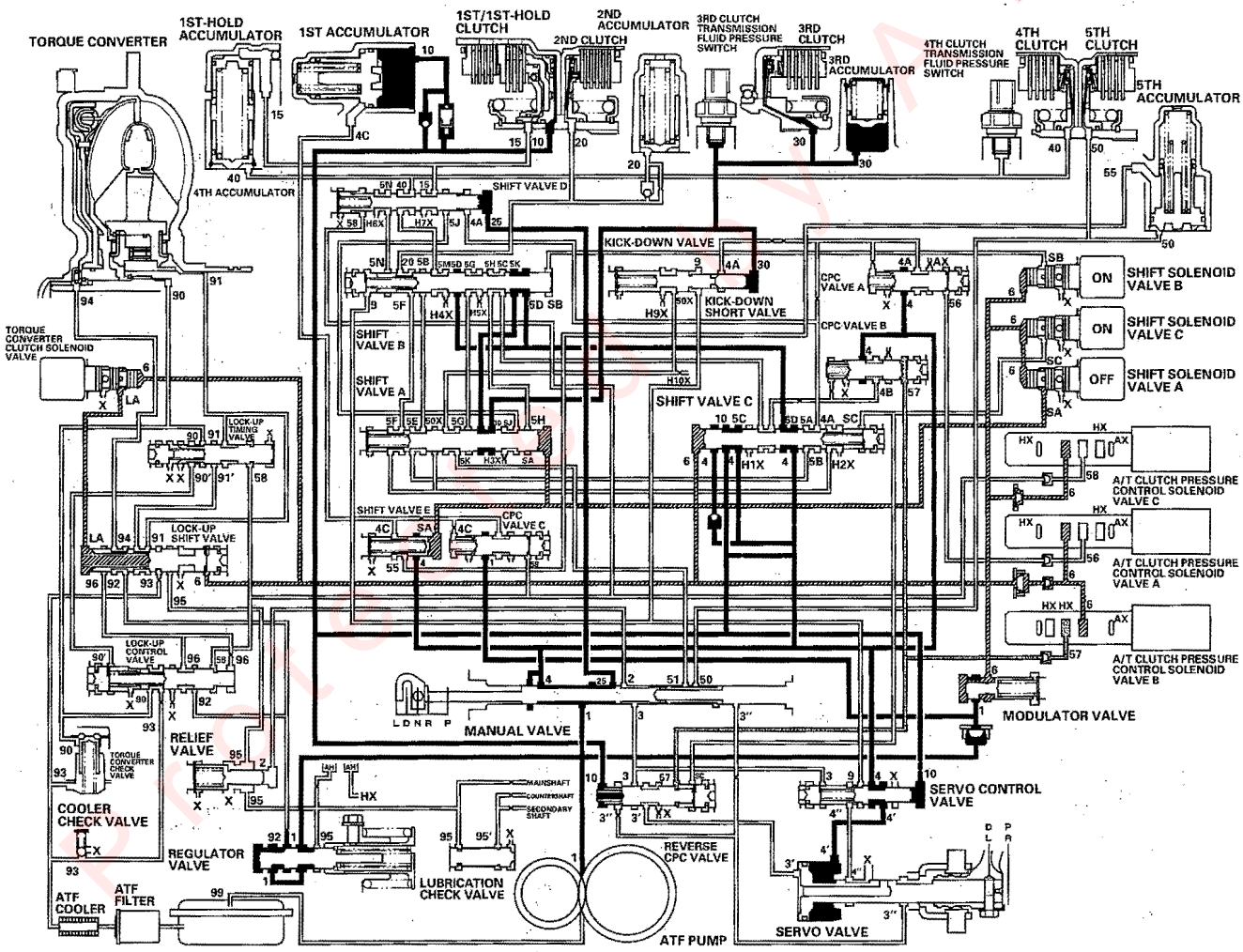

(cont'd)

System Description (cont'd)

Hydraulic Flow (cont'd)

D Position: Shifting between 3rd gear and 4th gear

As the speed of the vehicle reaches the prescribed value, the PCM turns shift solenoid valve B OFF. The PCM also controls the A/T clutch pressure control solenoid valve A to apply LS A pressure (56) to CPC valve A. Shift solenoid valve A stays OFF, and C stays ON. Shift solenoid valve B is turned OFF, and SH B pressure (SB) is applied to the right side of shift valve B. Then shift valve B is moved to the left side to switch the line pressure port and CPC pressure port. Line pressure (4) becomes CPC A pressure (4A) at CPC valve A, and becomes CPC B pressure (4B) at CPC valve B. CPC A pressure (4A) becomes 4th clutch pressure (40) at shift valve D via shift valves C, A, and B, and flows to the 4th clutch. The 3rd clutch pressure is changed to CPC pressure mode by switching the position of shift valve B. The 1st clutch is also engaged. No power is transmitted because of the one-way clutch.

NOTE: When used, "left" or "right" indicates direction on the hydraulic circuit.

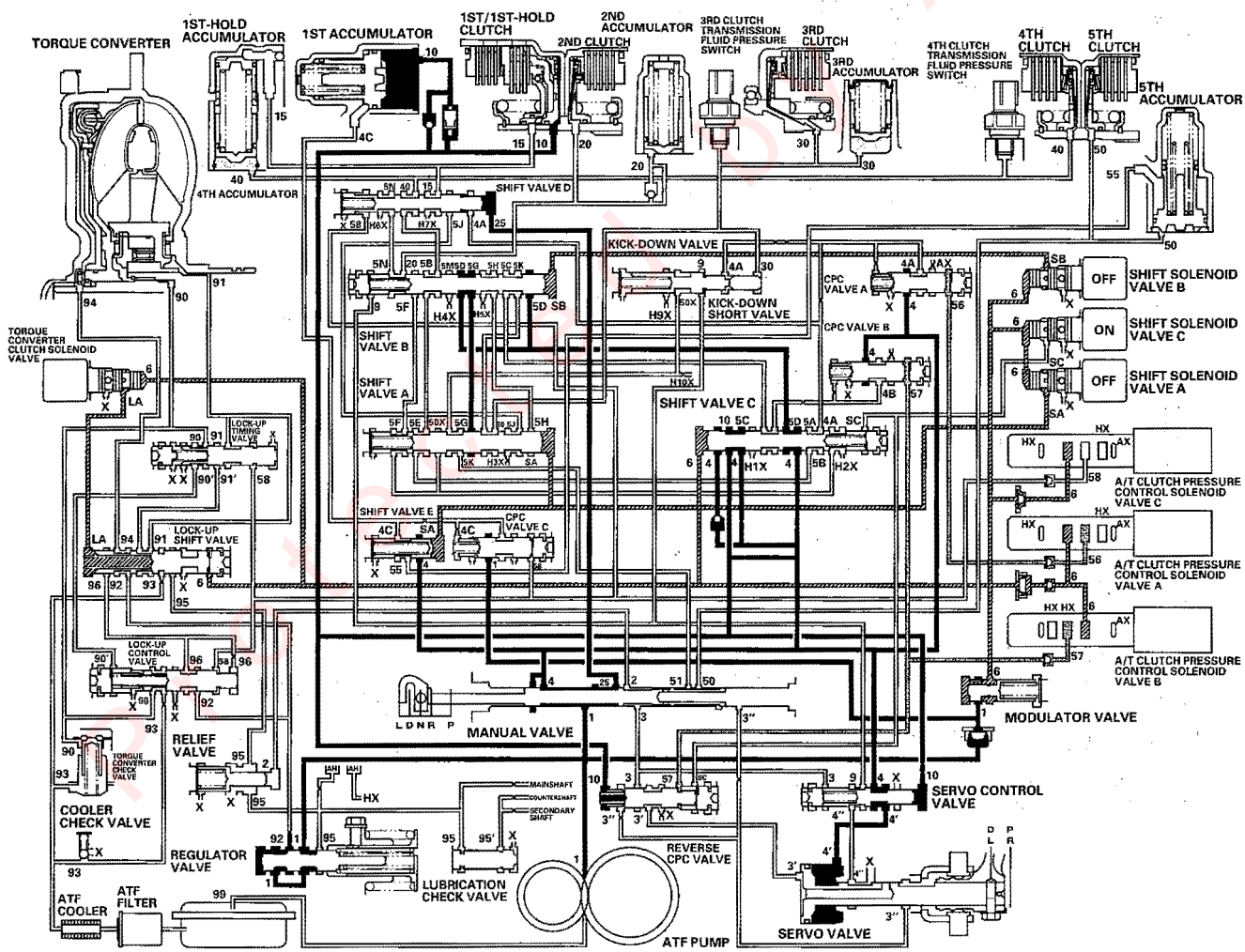

D Position: Driving in 4th gear

The PCM turns shift solenoid valve C OFF, and controls A/T clutch pressure control solenoid valve B to release LS B pressure (57) in CPC valve B. Shift solenoid valves A and B stay OFF. Releasing LS B pressure (57) in CPC valve B releases CPC B pressure in the 3rd clutch pressure circuit. Shift solenoid valve C is turned OFF, and SH C pressure (SC) is applied to the right side of shift valve C. Then shift valve C is moved to the left side to switch the line pressure port and CPC pressure port. Line pressure (4) from the manual valve becomes 4th clutch pressure (40) at shift valve D via shift valves C, A, and B, and flows to the 4th clutch. The 4th clutch pressure is changed to line pressure mode by switching the position of shift valve C, and the 4th clutch is engaged securely. The 1st clutch is also engaged. No power is transmitted because of the one-way clutch.

NOTE: When used, "left" or "right" indicates direction on the hydraulic circuit.

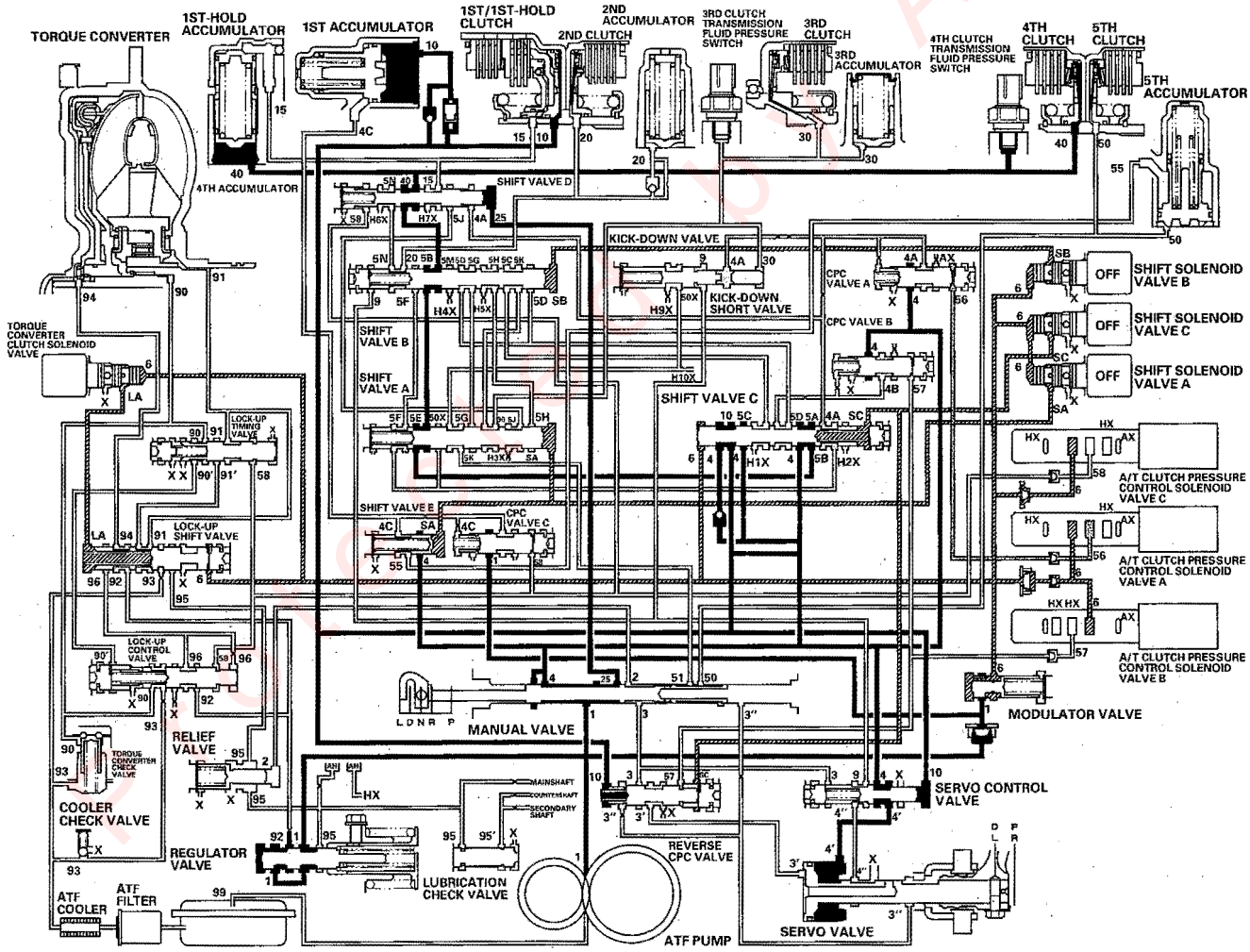

(cont'd)

System Description (cont'd)

Hydraulic Flow (cont'd)

D Position: Shifting between 4th gear and 5th gear

As the speed of the vehicle reaches the prescribed value, the PCM turns shift solenoid valve A ON. The PCM also controls the A/T clutch pressure control solenoid valve B to apply LS B pressure (57) to CPC valve B.

Shift solenoid valve B and C stay OFF. Shift solenoid valve A is turned ON, and SH A pressure (SA) in the right side of shift valves A and E is released. Then shift valves A and E are moved to the left side to switch the line pressure port and CPC pressure port. Line pressure (4) becomes CPC A pressure (4A) at CPC valve A, and becomes CPC B pressure (4B) at CPC valve B. CPC B pressure (4B) becomes 5th clutch pressure (50) at shift valve C, and flows to the 5th clutch via shift valves B and A and the manual valve. The 4th clutch pressure is changed to CPC pressure mode by switching the position of shift valve A. The 1st clutch is also engaged. No power is transmitted because of the one-way clutch.

NOTE: When used, "left" or "right" indicates direction on the hydraulic circuit.

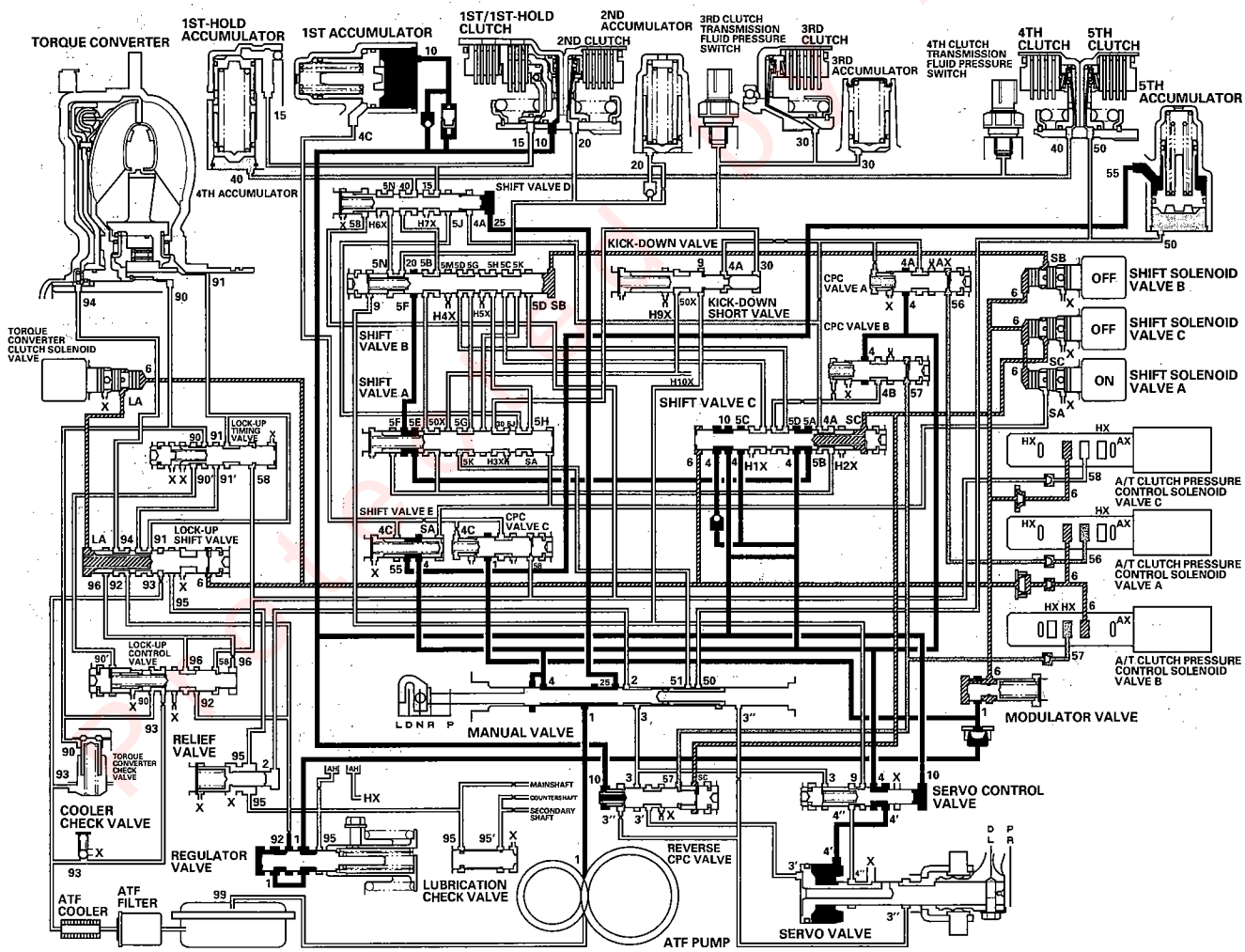

D Position: Driving in 5th gear

The PCM turns shift solenoid valve C ON, and controls A/T clutch pressure control solenoid valve A to release LS A pressure (56) in CPC valve A. Shift solenoid valve A stays ON, and B stays OFF. Releasing LS A pressure (56) in CPC valve A releases CPC A pressure in the 4th clutch pressure circuit. Shift solenoid valve C is turned ON, and SH C pressure (SC) in the right side of shift valve C is released. Then shift valve C is moved to the right side to switch the line pressure port and CPC pressure port. Line pressure (4) from the manual valve becomes 5th clutch pressure (50) at the manual valve, via shift valves C, B, and A, and flows to the 5th clutch. The 5th clutch pressure is changed to line pressure mode by switching the position of shift valve C. The 5th clutch is engaged securely, and the 1st clutch is also engaged. No power is transmitted because of the one-way clutch.

NOTE: When used, "left" or "right" indicates direction on the hydraulic circuit.

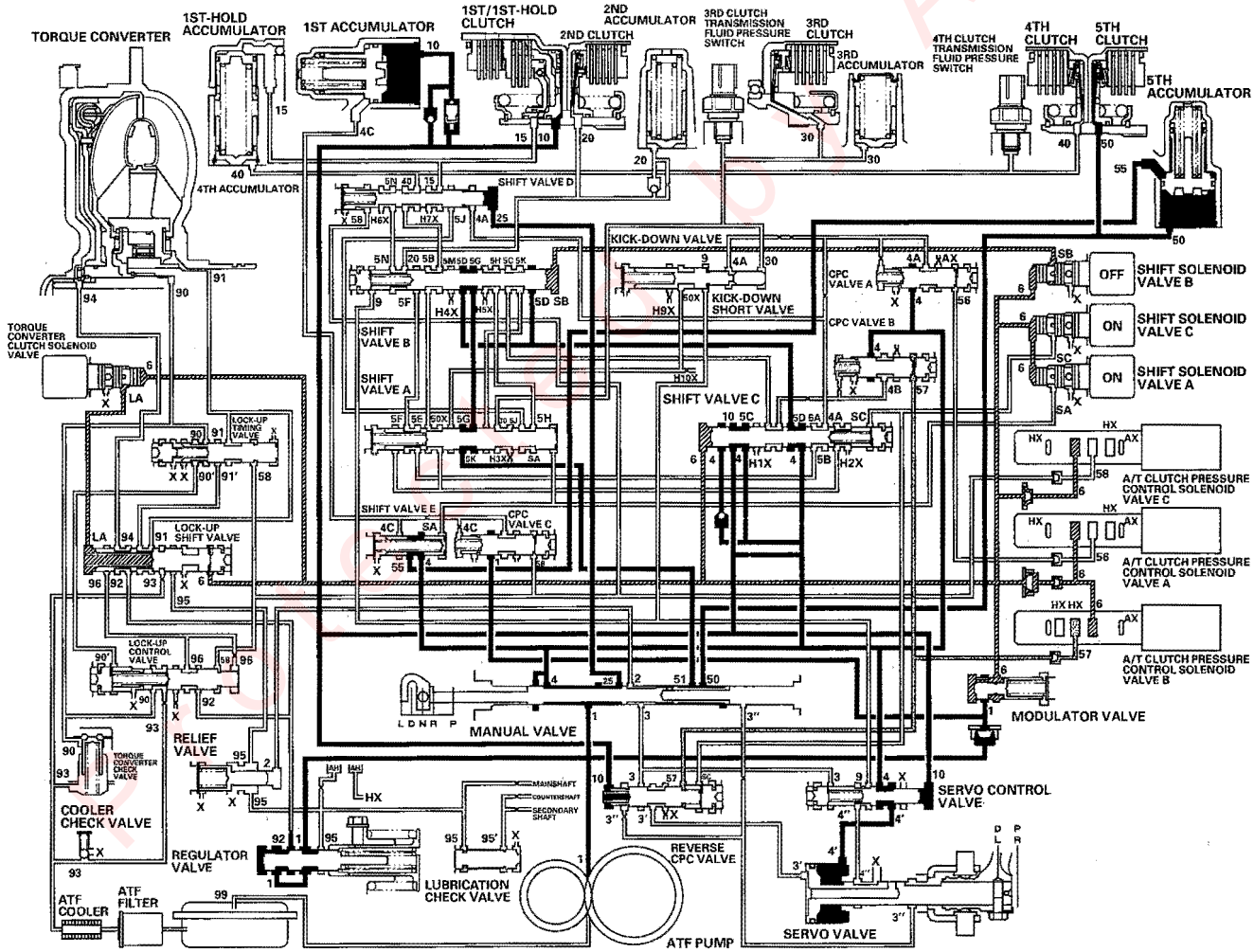

(cont'd)

System Description (cont'd)

Hydraulic Flow (cont'd)

L Position in 1st gear

The PCM controls the shift solenoid valves and the A/T clutch pressure control solenoid valves. The conditions of the shift solenoid valves and the positions of shift valves are as follows:

- Shift solenoid valve A is turned ON, and shift valve A stays on the right side.
- Shift solenoid valve B is turned ON, and shift valve B stays on the right side.
- Shift solenoid valve C is turned ON, and shift valve C moves to the right side by modulator pressure (6).

The PCM also controls A/T clutch pressure control solenoid valve B to apply LS B pressure (57) to CPC valve B. Line pressure (4) from the manual valve becomes 1st clutch pressure (10) at shift valve C. 1st clutch pressure (10) is applied to the 1st clutch, and the 1st clutch is engaged. Line pressure (4) also flows to CPC valve B, and becomes CPC B pressure (4B). CPC B pressure (4B) becomes 1st-hold clutch pressure (15) at shift valve D, via shift valves C, B, and A. 1st-hold clutch pressure (15) is applied to the 1st-hold clutch, and the 1st-hold clutch is engaged.

NOTE: When used, "left" or "right" indicates direction on the hydraulic circuit.

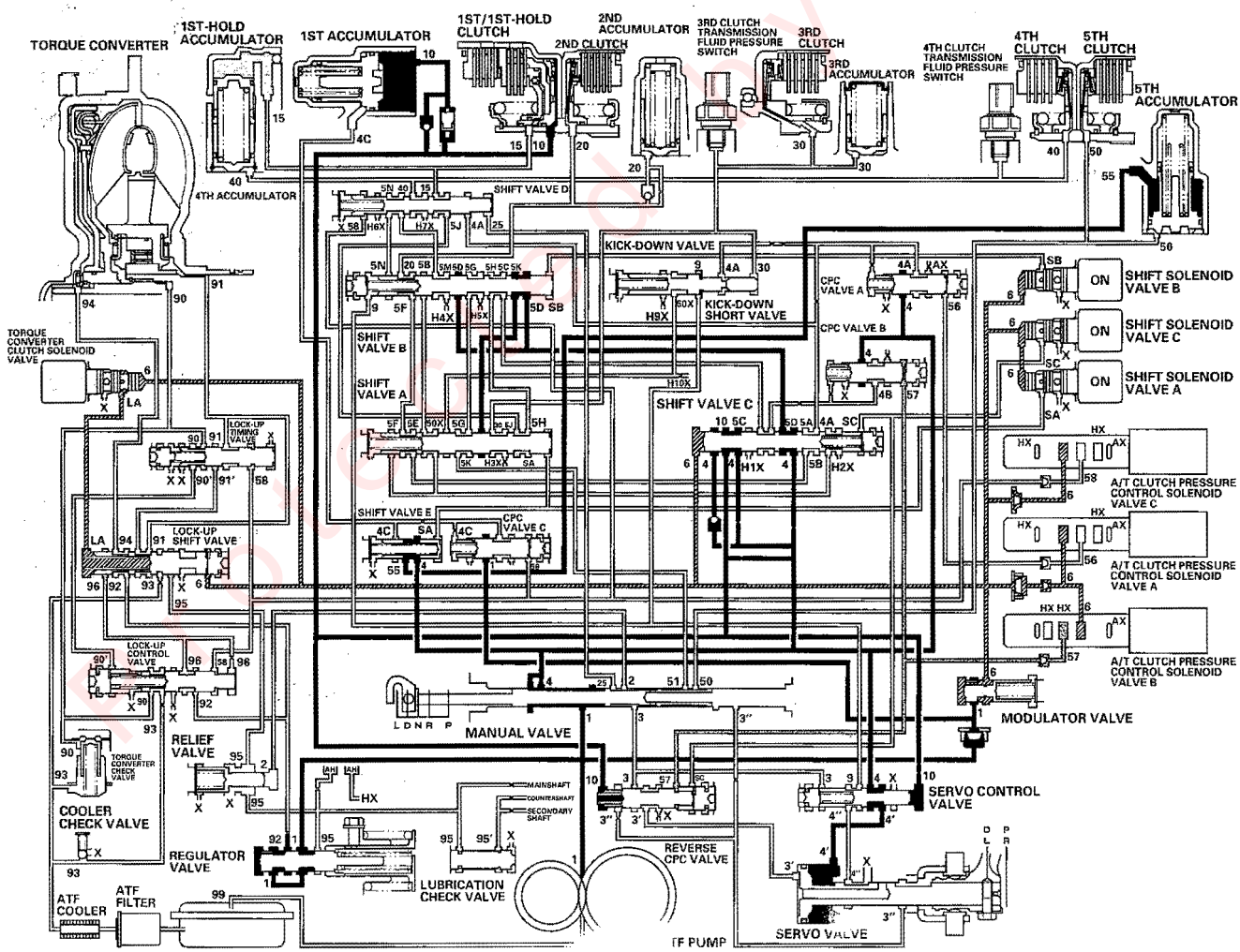

L Position: Shifting between 1st gear and 2nd gear

As the speed of the vehicle reaches the prescribed value, the PCM controls the A/T clutch pressure control solenoid valves. LS B pressure (57) in the right side of CPC valve B is released, 1st-hold clutch pressure is released, and the 1st-hold clutch disengages. LS A pressure (56) is applied to the right side of CPC valve A. Line pressure (4) becomes CPC A pressure (4A) at CPC valve A, and CPC A pressure passes through shift valves C, A, and B, to become 2nd clutch pressure. The 2nd clutch is engaged with CPC pressure, and the 1st clutch is also engaged. No power is transmitted because of the one-way clutch.

NOTE: When used, "left" or "right" indicates direction on the hydraulic circuit.

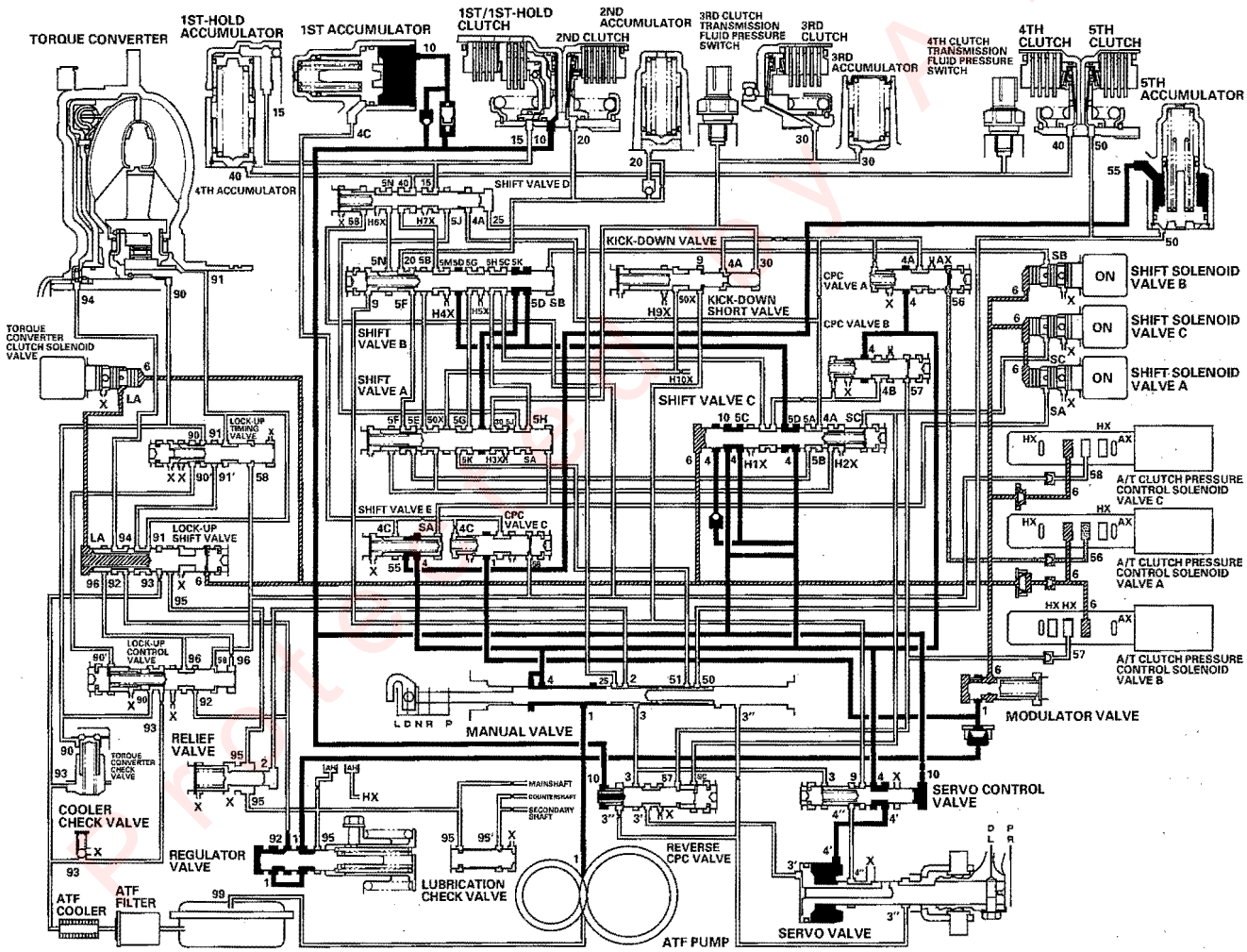

(cont'd)

System Description (cont'd)

Hydraulic Flow (cont'd)

L Position: Driving in 2nd gear

The PCM turns shift solenoid valve C OFF, and shift solenoid valves A and B stays ON. Shift solenoid valve C is turned OFF, and SH C pressure (SC) is applied to the right side of shift valve C. Then shift valve C is moved to the left side to switch the line pressure port and CPC pressure port. The 2nd clutch pressure is changed to line pressure mode, and the 2nd clutch is engaged securely. The 1st clutch is also engaged. No power is transmitted because of the one-way clutch.

NOTE: When used, "left" or "right" indicates direction on the hydraulic circuit.

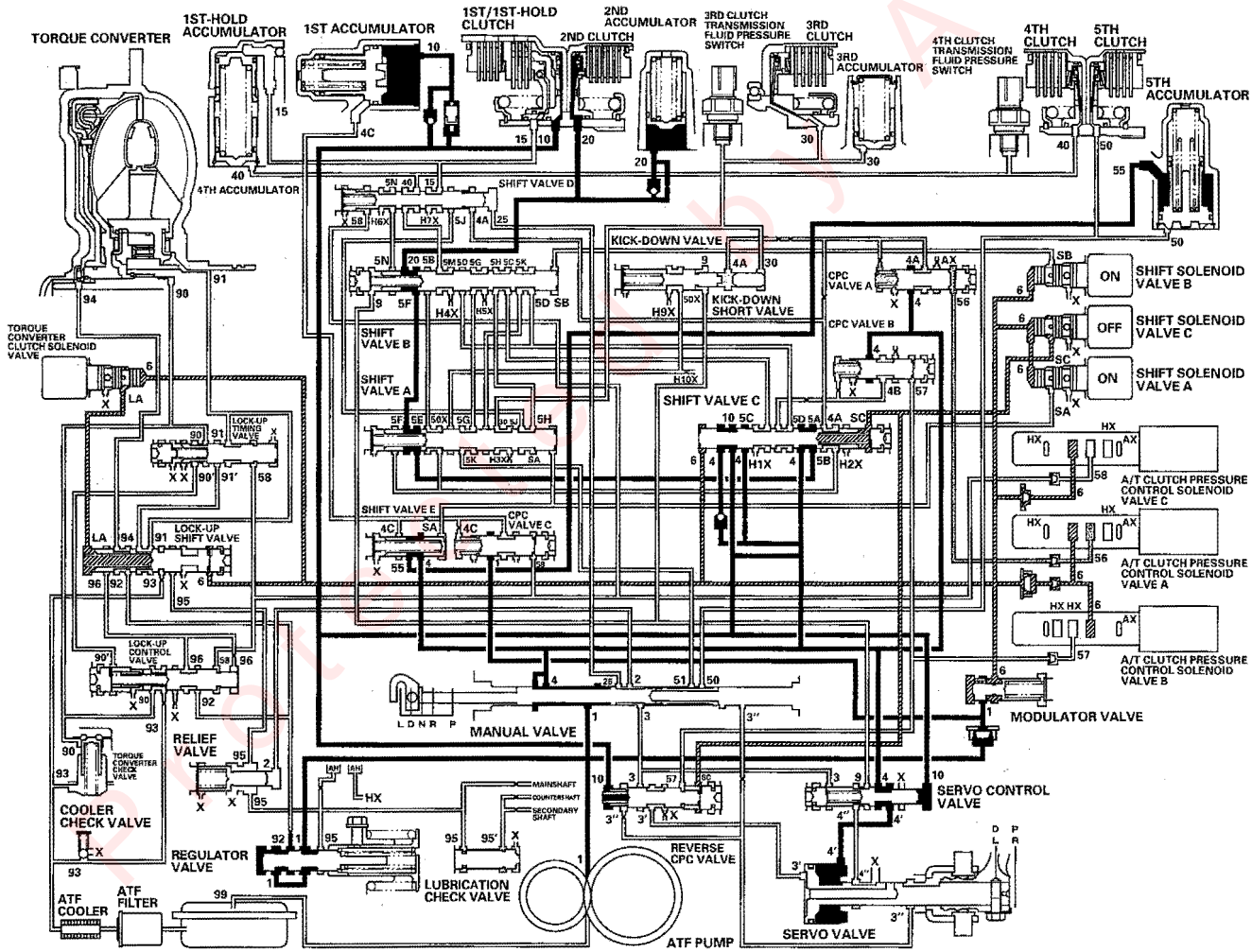

R Position: Shifting to the R position from the P or N position

Line pressure (1) becomes line pressure (3) at the manual valve, and flows to the reverse CPC valve. Line pressure (3) is regulated by the reverse CPC valve and becomes line pressure (3'). Line pressure (3') pushes the servo valve to the reverse position, passes through the servo valve, and flows to the manual valve. Line pressure (3'') becomes 5th clutch pressure (50). The 5th clutch pressure (50) is applied to the 5th clutch, and 5th clutch is engaged with the reverse CPC pressure mode.

NOTE: When used, "left" or "right" indicates direction on the hydraulic circuit.

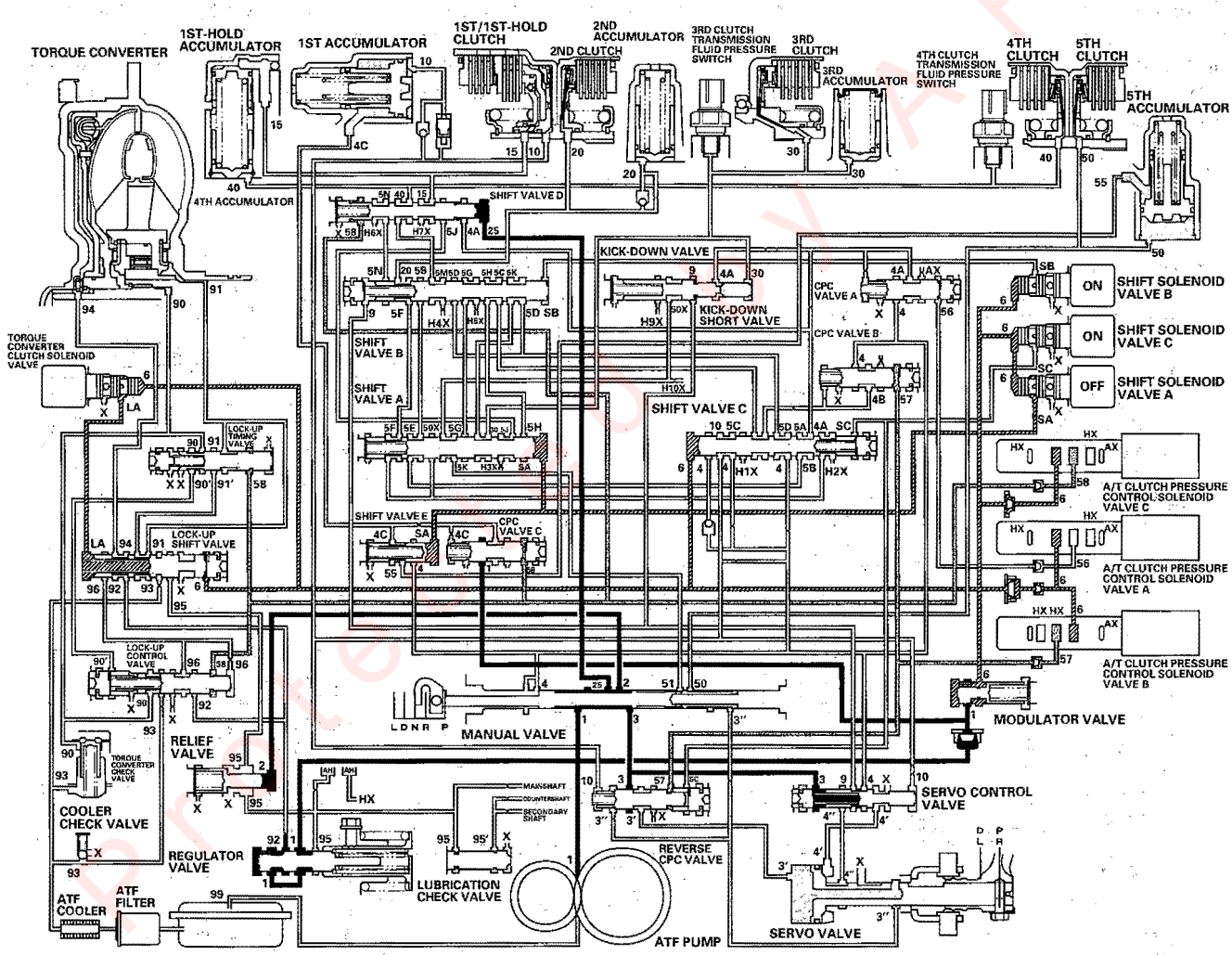

(cont'd)

System Description (cont'd)

Hydraulic Flow (cont'd)

R Position: Driving in reverse gear
The PCM turns shift solenoid valve C OFF. Shift solenoid valve A stays OFF and B stays ON. Shift solenoid valve C is turned OFF, and SH C pressure (SC) is applied to the right side of the reverse CPC valve. Then the reverse CPC valve moves to the left side, creating full line pressure. Line pressure to the 5th clutch is the same as when shifting to the R position, and 5th clutch pressure increases. The 5th clutch is engaged with line pressure mode.

Reverse Inhibitor Control
When the R position is selected while the vehicle is moving forward at speeds over 6 mph (10 km/h), the PCM outputs to turn shift solenoid valves A and C ON; and shift solenoid valve B remains ON. The reverse CPC valve is moved to right side and covers the port to stop the line pressure (3') to the servo valve. The line pressure (3') is not applied to the servo valve, and the 5th clutch pressure (50) is not applied to the 5th clutch. As a result, power is not transmitted to the reverse position.

NOTE: When used, "left" or "right" indicates direction on the hydraulic circuit.

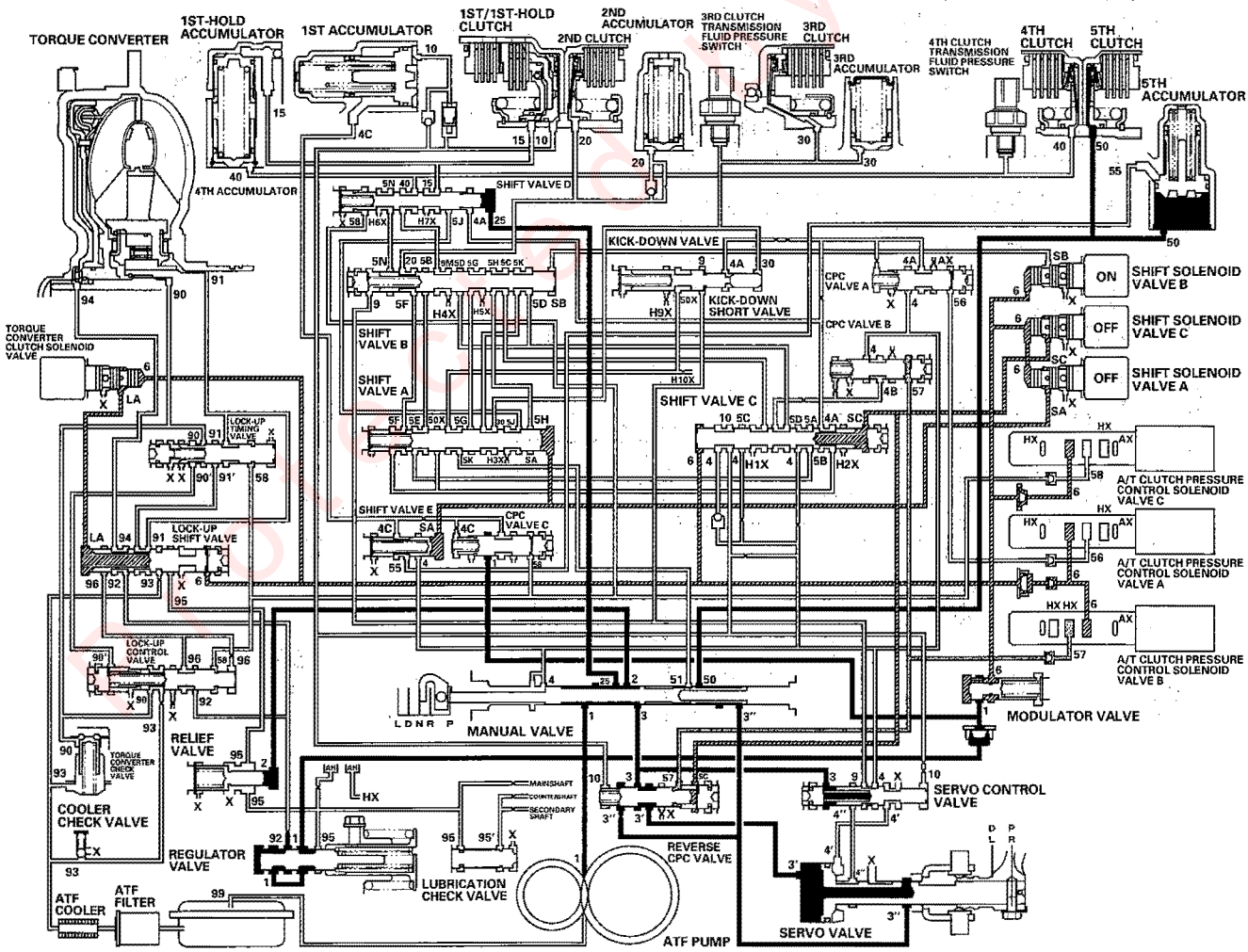

P Position

Shift solenoid valve C is turned OFF by the PCM, and SH C pressure (SC) is applied to the right side of the reverse CPC valve. Then the reverse CPC valve is moved to the left side to uncover the port leading line pressure (3) to the servo valve. Line pressure (3') passes through the servo valve and flows to the manual valve. Line pressure (3'') is intercepted at the manual valve, and is not applied to the clutches.

NOTE: When used, "left" or "right" indicates direction on the hydraulic circuit.

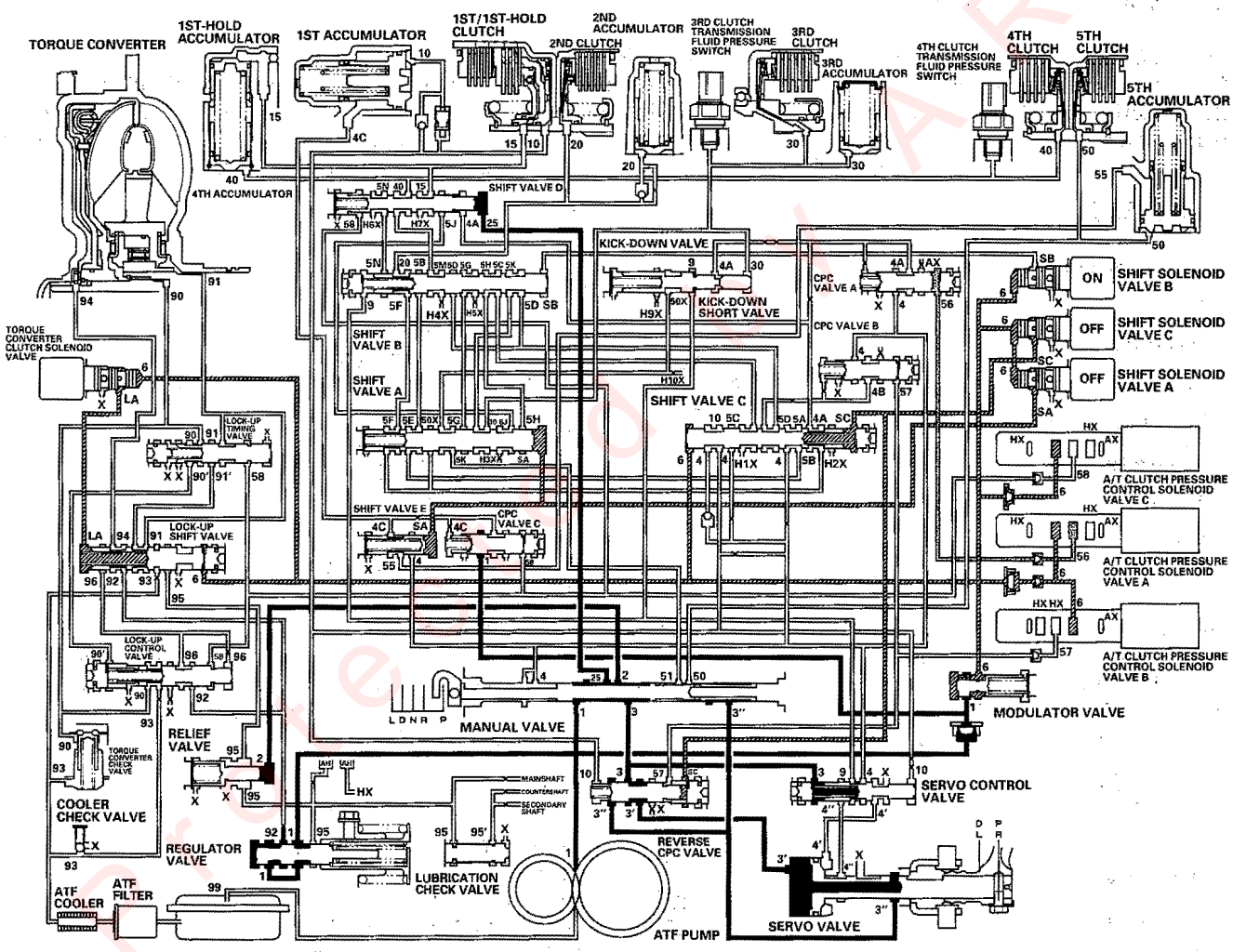

System Description (cont'd)

Lock-up System

The lock-up mechanism of the torque converter clutch operates in D position (2nd, 3rd, 4th, and 5th). The pressurized fluid is drained from the back of the torque converter through a fluid passage, causing the torque converter clutch piston to be held against the torque converter cover. As this takes place, the mainshaft rotates at the same speed as the engine crankshaft. Together with the hydraulic control, the PCM optimizes the timing and volume of the lock-up mechanism. When the torque converter clutch solenoid valve activates, modulator pressure changes to switch lock-up on and off. The lock-up control valve and the lock-up timing valve control the amount of lock-up conditions according to A/T clutch pressure control solenoid valve C.

Torque Converter Clutch Lock-up ON (Engaging Torque Converter Clutch)
Fluid in the chamber between the torque converter cover and the torque converter clutch piston is drained off, and fluid entering from the chamber between the pump and stator exerts pressure through the torque converter clutch piston against the torque converter cover. The torque converter clutch piston engages with the torque converter cover; the torque converter clutch lock-up is ON, and the mainshaft rotates at the same speed as the engine.

Power flow

The power flows by way of:

Engine
↓
Drive plate
↓
Torque converter cover
↓
Torque converter clutch piston
↓
Damper spring
↓
Turbine
↓
Mainshaft

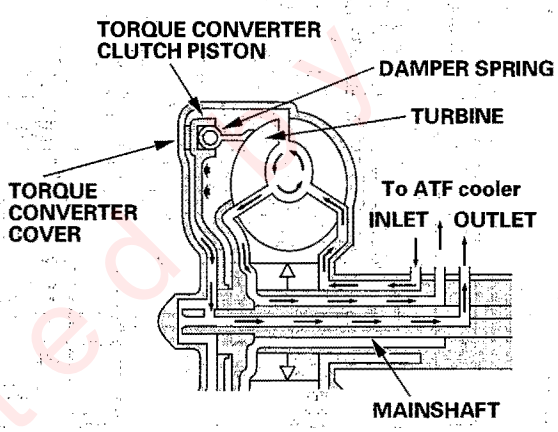

Torque Converter Clutch Lock-up OFF (Disengaging Torque Converter Clutch)
Fluid entered from the chamber between the torque converter cover and the torque converter clutch piston passes through the torque converter and goes out through the chambers between the turbine and the stator, and between the pump and the stator. As a result, the torque converter clutch piston moves away from the torque converter, and the torque converter lock-up clutch is released; torque converter clutch lock-up is OFF.

Power flow

Engine
↓
Drive plate
↓
Torque converter cover
↓
Pump
↓
Turbine
↓
Mainshaft

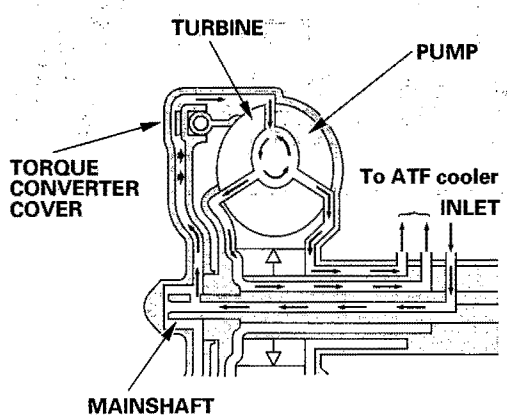

Protected by

No Lock-up

The torque converter clutch solenoid valve is turned OFF by the PCM. The lock-up shift valve receives LC pressure (LA) on the left side, and modulator pressure (6) on the right side. The lock-up shift valve is in the right side to uncover the port leading torque converter pressure (92) to the left side of the torque converter. Torque converter pressure (92) becomes torque converter pressure (94), and enters into the left side of the torque converter to disengage the torque converter clutch. The lock-up is OFF.

NOTE: When used, "left" or "right" indicates direction on the hydraulic circuit.

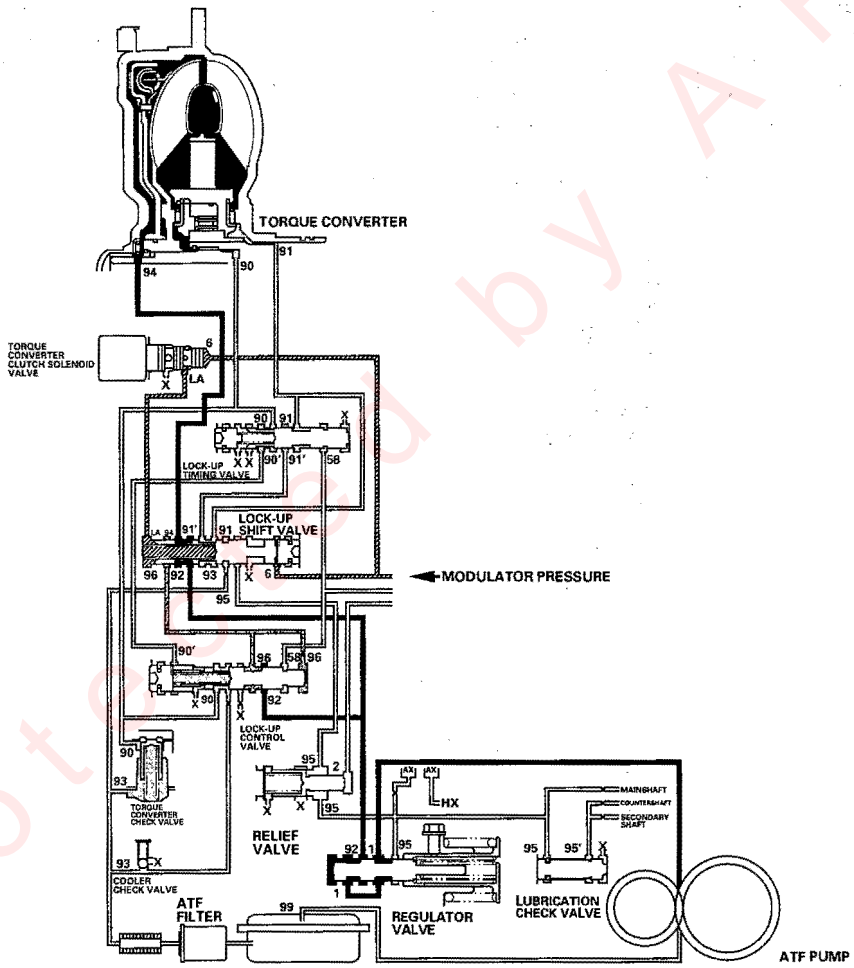

Protected by AR

(cont'd)

System Description (cont'd)

Lock-up System (cont'd)

Partial Lock-up

As the speed of the vehicle reaches the prescribed value, the torque converter clutch solenoid valve is turned ON by the PCM to release LC pressure (LA) in the left cavity of the lock-up shift valve. Modulator pressure (6) is applied to the right side of the lock-up shift valve, then the lock-up shift valve is moved in the left side to switch the port leading torque converter pressure to the right side of the torque converter. Torque converter pressure (91) is applied to the right side of the torque converter to engage the torque converter clutch. The PCM also controls A/T clutch pressure control solenoid valve C, and LS C pressure (58) is applied to the lock-up control valve and the lock-up timing valve. When LS C pressure (58) is lower, torque converter pressure (91) from the lock-up timing valve is lower. The torque converter clutch is engaged partially. LS C pressure (58) increases, and the lock-up timing valve is moved to the left side to uncover the port leading torque converter pressure to high. The torque converter clutch is then engaged securely. Under this condition, the torque converter clutch is engaged by pressure from the right side of the torque converter; this lock-up condition is in partial lock-up.

NOTE: When used, "left" or "right" indicates direction on the hydraulic circuit.

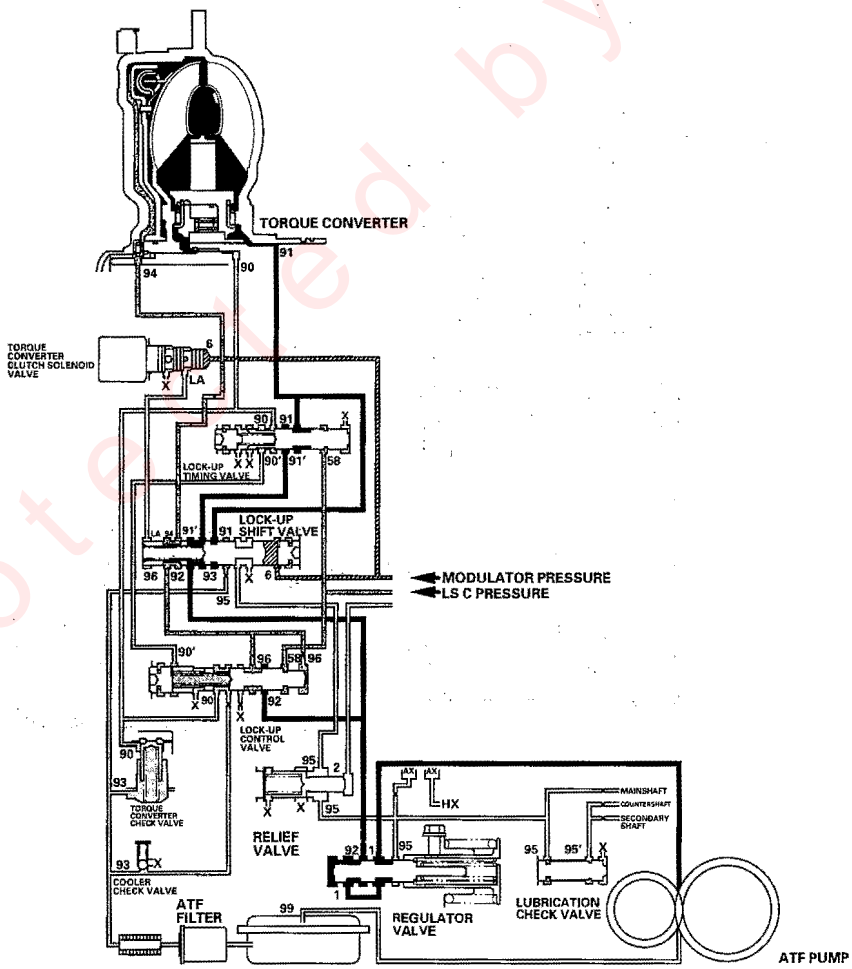

Protected by AP

Full Lock-up

When the vehicle speed increases, the PCM sends a signal to the A/T clutch pressure control solenoid valve C to increase LS C pressure (58). The LS C pressure (58) is applied to the lock-up control valve and the lock-up timing valve, and moves them to the left side. Under this condition, torque converter back pressure (F2) is released fully, causing the torque converter clutch to be fully engaged.

NOTE: When used, "left" or "right" indicates direction on the hydraulic circuit.

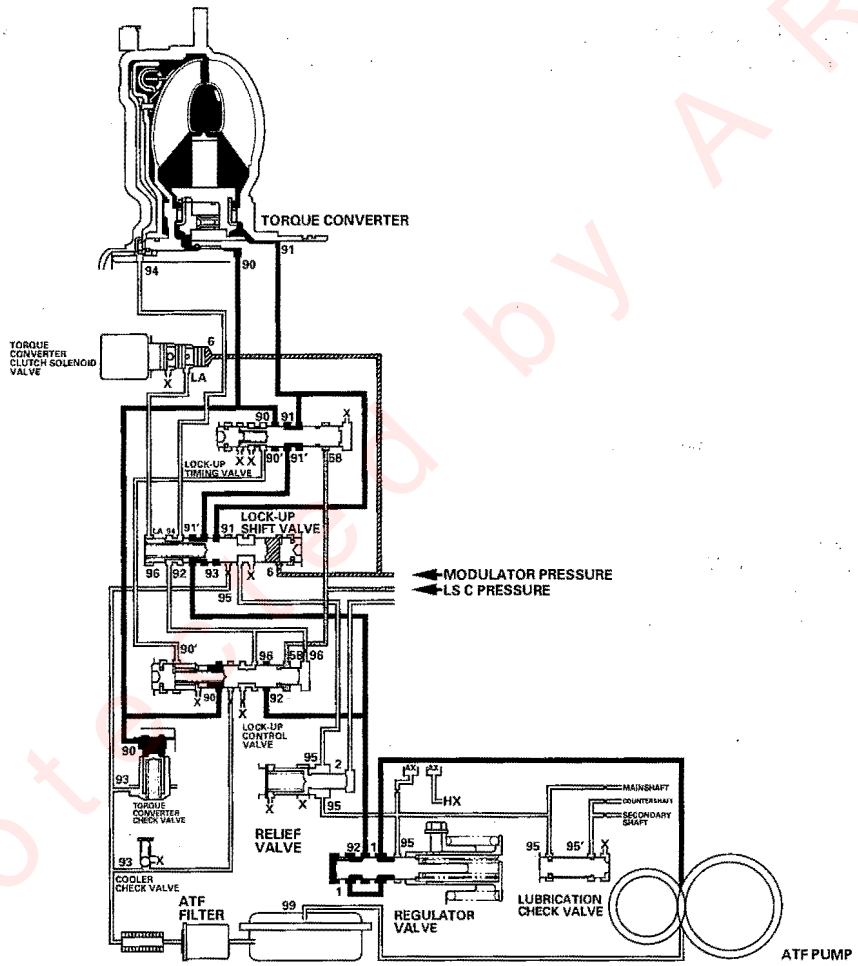

Protected by A R

System Description (cont'd)

Shift Lever Mechanism

The shift lever has five positions; the P, R, N, D, and L positions. The D position has two modes; automatic shift mode and sequential sportshift mode with the shift lever moved to the M position. The shift lever movement and position is indicated by the A/T gear position indicator panel. The shift lever can be shifted out of the P position and into the R position without pressing the shift lever. The shift lock/reverse lock mechanism is an additional shift lever lockout mechanism. The shift lever is engaged with the shift lever link in the P, R, N, D, and L positions. This unit shifts the transmission using the shift cable connected between the shift cable link and the transmission control shaft.

In the M position, the shift lever is disengaged from the shift lever link, and the shift lever can be used to shift gears manually between 1st through 5th, much like a manual transmission.

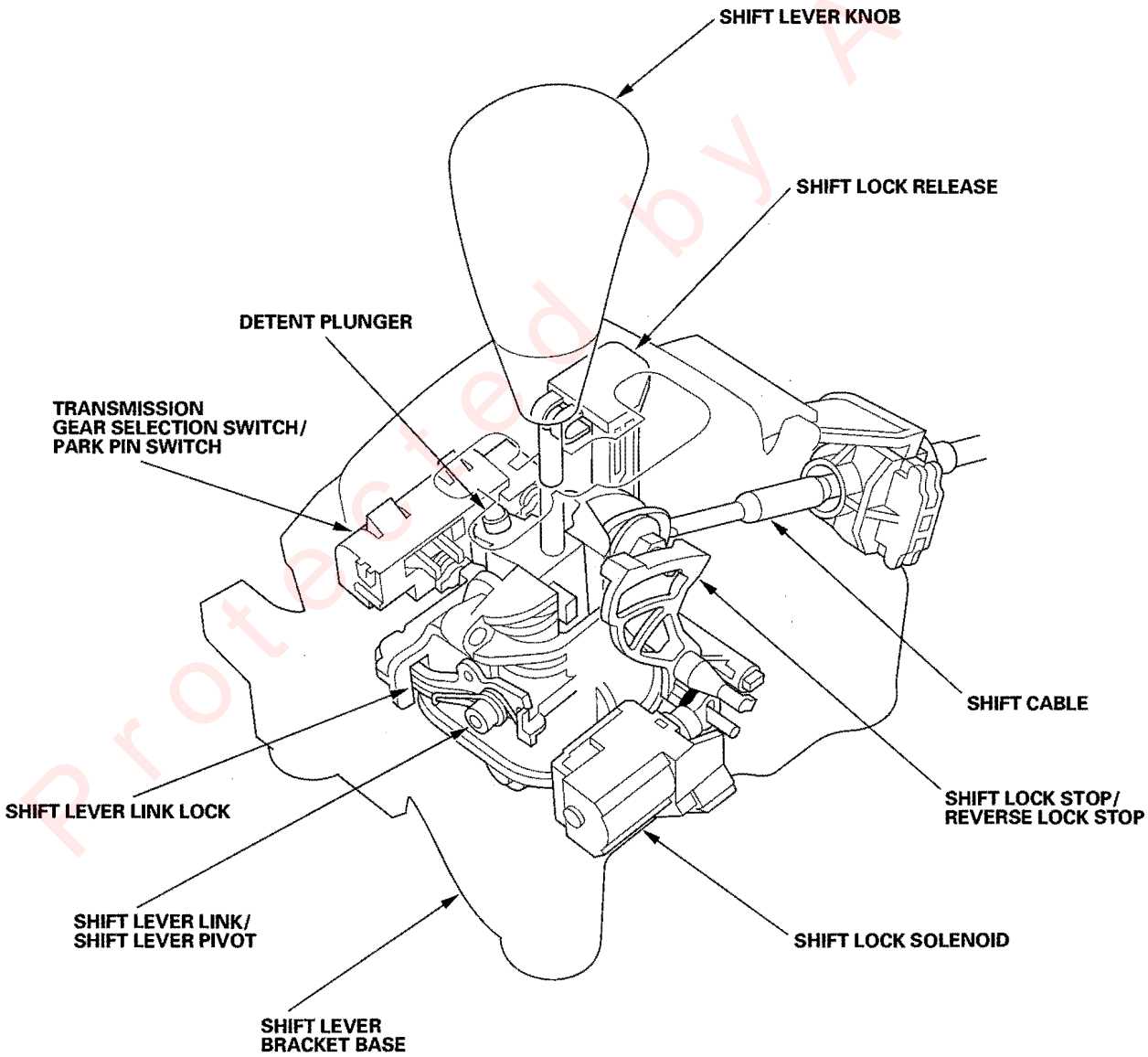

Protected by AR

Shift Lever Mechanism in M Position

When the shift lever shifts to the M position, the shift lever is disengaged from the shift lever link/shift lever pivot, and the shift lever link lock pops up to engage with the shift lever bracket base; the shift lever link/shift lever pivot and shifting position in the transmission are held in the D position.

The shift lever link lock is spring loaded, it pops up in the M position, and does not engage the shift lever link/shift lever pivot in any position except M.

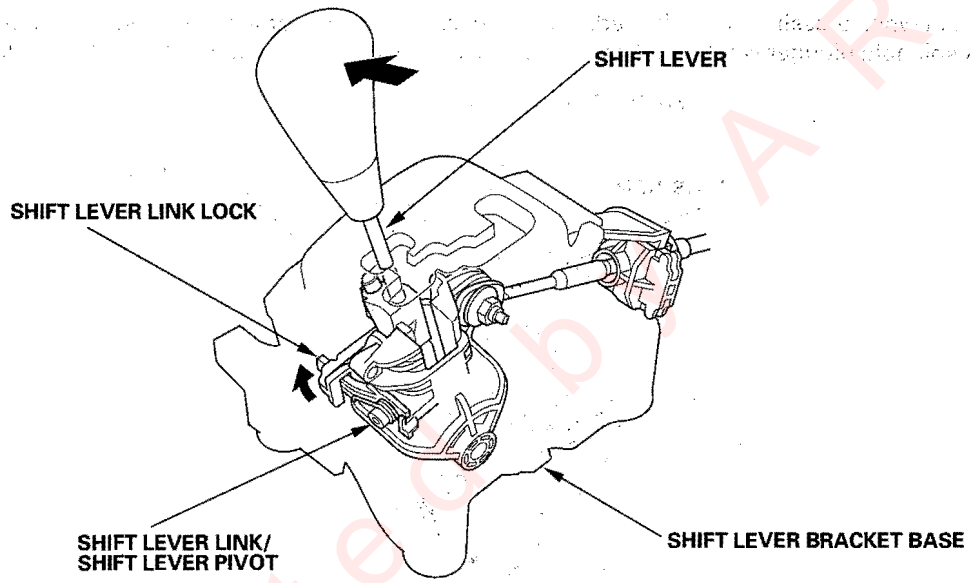

The shift lever fits into the M position by using a detent plunger with a spring. When shifting to upshift and downshift positions, the detent plunger is depressed by the detent bracket inner wall, and detent plunger spring puts the shift lever back into the neutral position. The detent plunger also works in the P position.

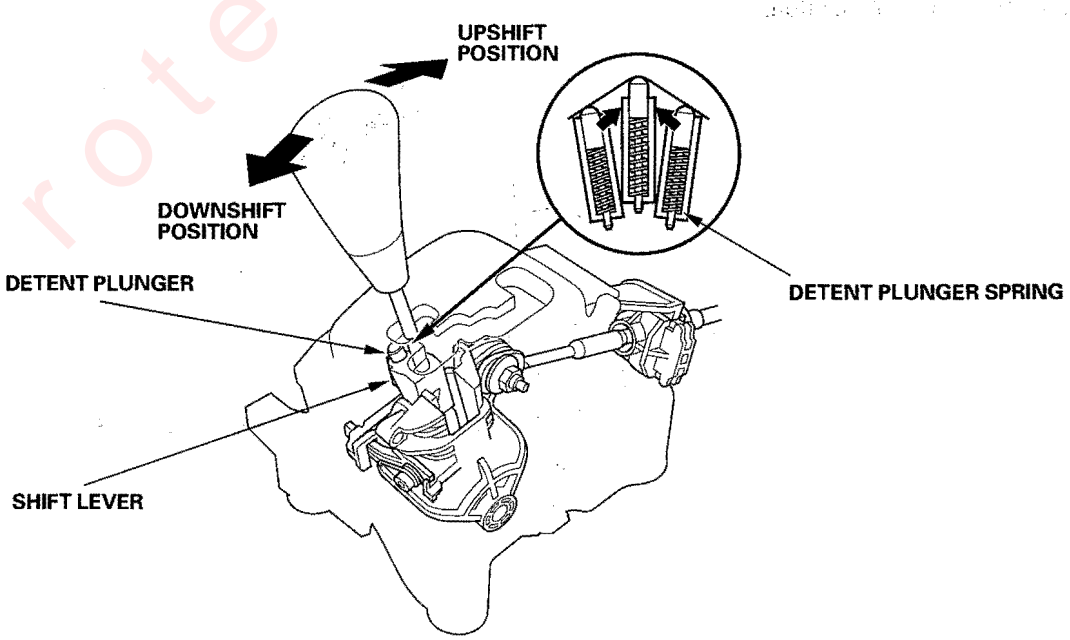

Protected by A R

System Description (cont'd)

Shift Lock/Reverse Lock Mechanism

The shift lock system reduces the risk of the unintentional engine starting. Starting the engine is possible only in the P and N positions. The shift lock mechanism consists of the shift lock solenoid, shift lock stop/reverse lock stop, shift lock release, and related parts. The reverse lock mechanism shares the shift lock mechanism. The shift lock solenoid is electronically controlled by the shift lock/reverse lock control system signals. If the shift lock solenoid does not operate, the shift lock/reverse lock mechanism can be released by pressing the shift lock release.

In the P position while pressing the brake pedal and releasing the accelerator, the shift lock solenoid is turned ON, and the shift lock solenoid plunger is retracted, releasing the shift lock stop. This allows the shift lever to be moved.

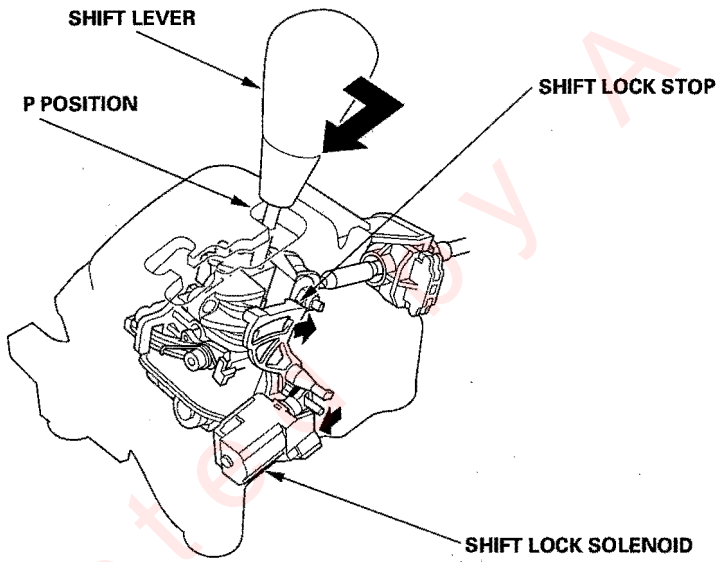

When the brake pedal is released or the accelerator is pressed, the shift lock solenoid stays OFF, and the shift lock stop locks the shift lever in the P position.

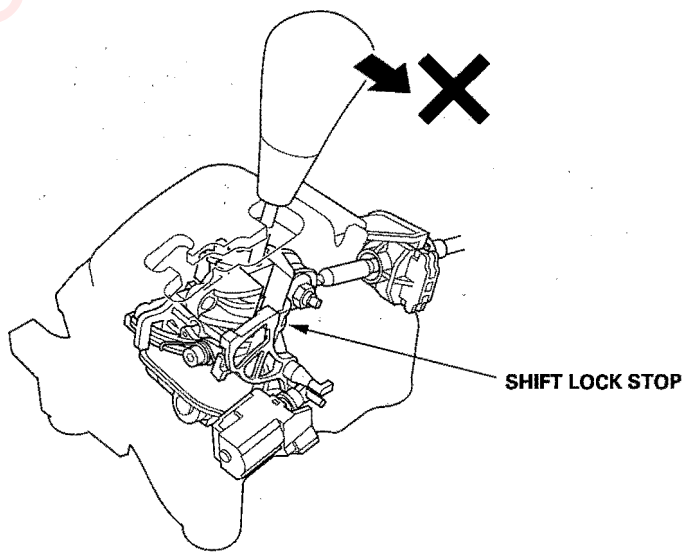

Protected by A P

When the shift lever is shifted to the R position from the N, the shift lock solenoid is turned ON, and the shift lock solenoid plunger is retracted to release the reverse lock stop. This allows the shift lever to be moved to the R position.

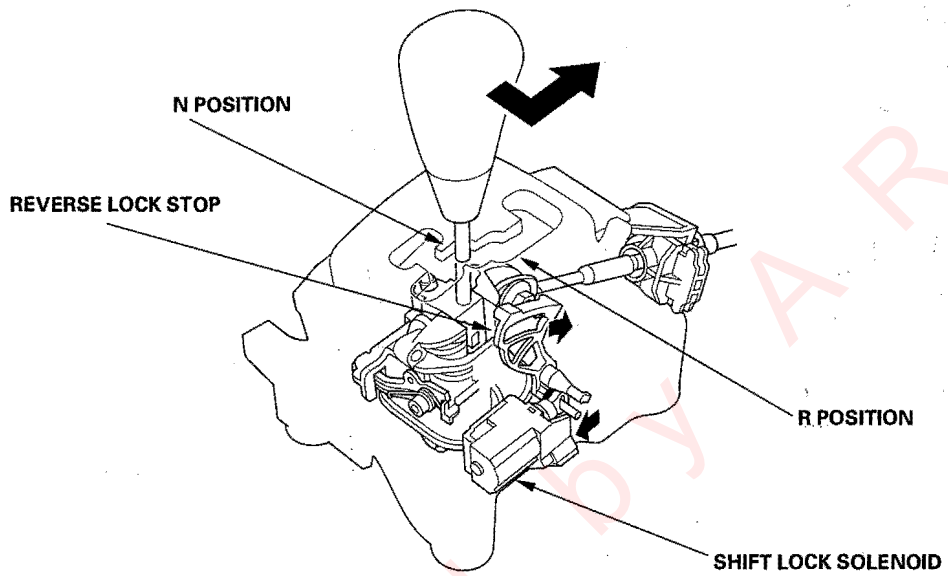

If the conditions (acceleration at 6 mph (10 km/h) or less, and deceleration at 5 mph (8 km/h) or less in the D position) for turning ON the solenoid are not met, the shift lock solenoid stays OFF, and the reverse lock stop locks the shift lever in the N position.

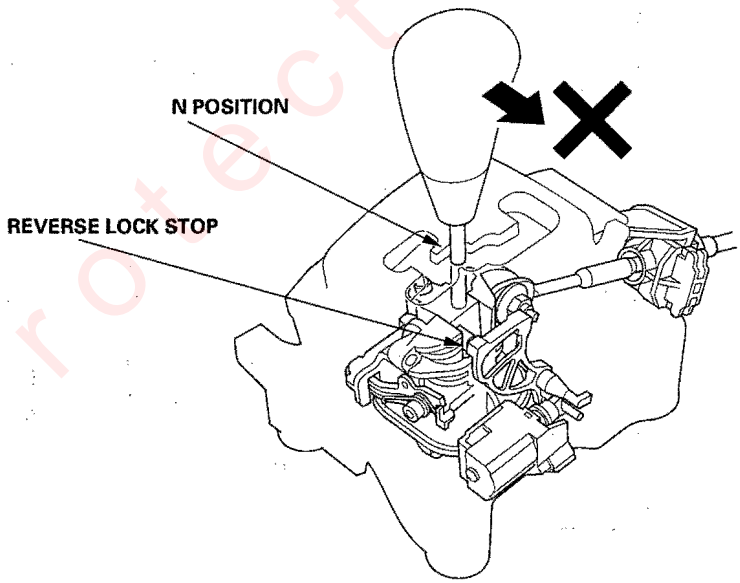

Protected by A R

System Description (cont'd)

Circuit Diagram - PCM A/T Control System

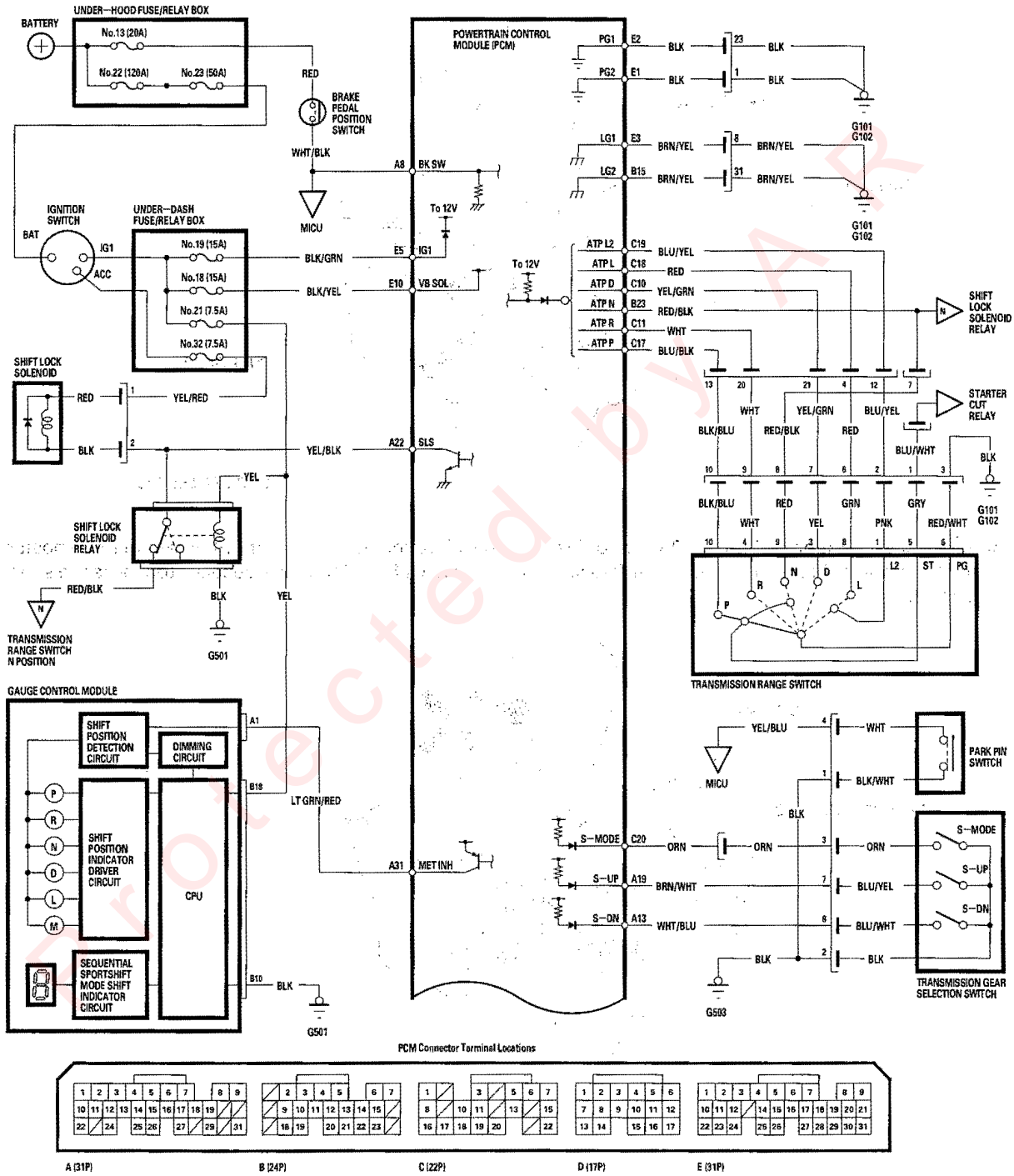

Protected by AR

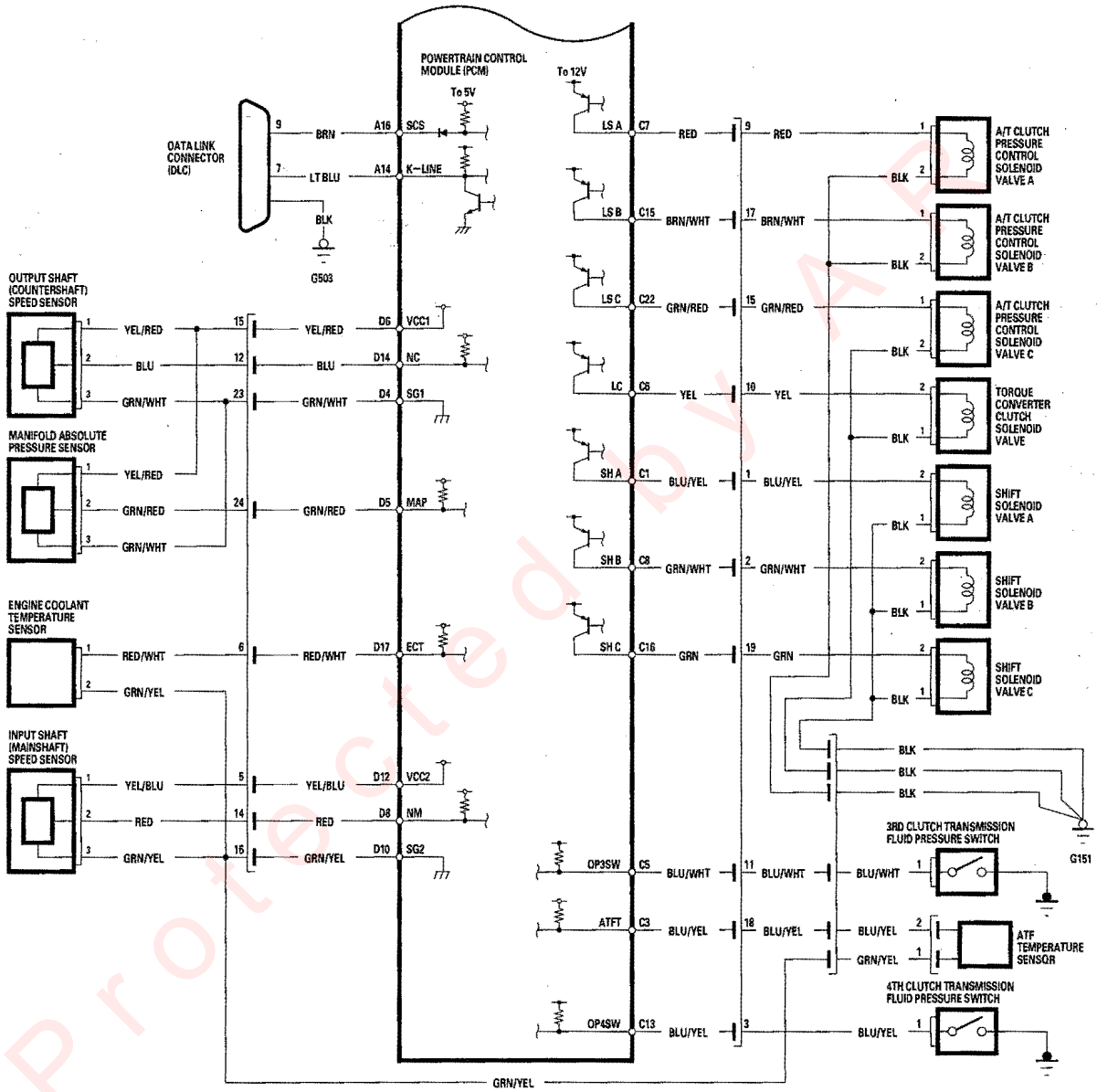

PCM Connector Terminal Locations

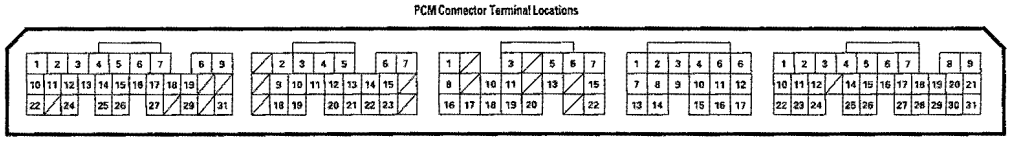

Protected by AR

DTC Troubleshooting

DTC P0705: Transmission Range Switch Circuit (Multiple Shift-position Input)

NOTE:
- Record all freeze data and review General Troubleshooting Information (see page 14-3) before you troubleshoot.
- This code is caused by an electrical circuit problem and cannot be caused by a mechanical problem in the transmission.

1. Clear the DTC with the HDS.
2. Start the engine.
3. Move the shift lever to each position, and check the OBD STATUS in DTCs MENU for a pass/fail test of code P0705.

   Did the result indicate a fail?

   YES—Go to step 4.

   NO—Intermittent failure, the system is OK at this time. Check for an intermittent short in the wires between the transmission range switch and PCM. If the tester indicates NOT COMPLETE, return to step 1 and recheck.■
4. Inspect the transmission range switch (see page 14-240).

   Is the switch OK?

   YES—Go to step 5.

   NO—Replace the transmission range switch (see page 14-242), then go to step 38.
5. Turn the ignition switch ON (II).
6. Measure the voltage between PCM connector terminals C17 and B15 or E3 in all positions other than P.

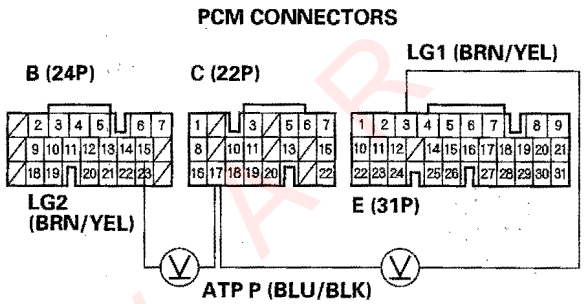

Wire side of female terminals

Is there battery voltage?

YES—Go to step 13.

NO—Go to step 7.

Protected by AR

7. Turn the ignition switch OFF.
8. Jump the SCS line with the HDS.
9. Disconnect PCM connector C (22P).
10. Check for continuity between PCM connector terminal C17 and body ground.

PCM CONNECTOR C (22P)

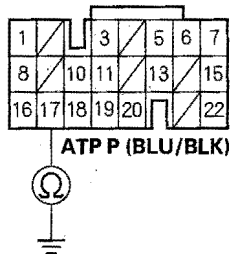

Wire side of female terminals

Is there continuity?

YES—Repair short in the wire between PCM connector terminal C17 and the transmission range switch, then go to step 38.

NO—Go to step 11.

11. Disconnect PCM connectors B (24P) and E (31P).
12. Check for continuity between PCM connector terminals B15 and body ground, and between E3 and body ground.

PCM CONNECTORS

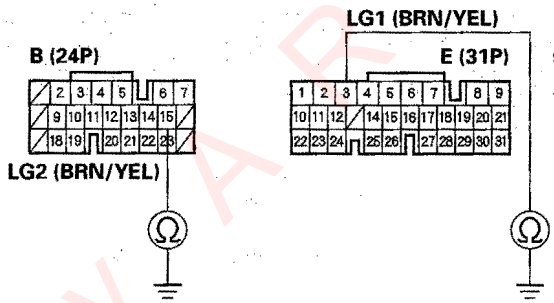

Wire side of female terminals

Is there continuity?

YES—Update the PCM if it does not have the latest software, or substitute a known-good PCM (see page 14-6), then recheck. If the symptom/indication goes away with a known-good PCM, replace the original PCM. ■

NO—Repair open in the wire between PCM connector terminals B15, E3, and ground (G101, G102), or repair poor ground (G101, G102), then go to step 38.

(cont'd)

Protected by AR

DTC Troubleshooting (cont'd)

13. Measure the voltage between PCM connector terminals C11 and B15 or E3 in all positions other than R.

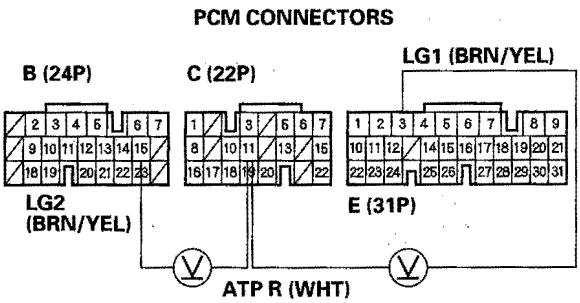

Wire side of female terminals

Is there battery voltage?

YES—Go to step 18.

NO—Go to step 14.

14. Turn the ignition switch OFF.

15. Jump the SCS line with the HDS.

16. Disconnect PCM connector C (22P).

17. Check for continuity between PCM connector terminal C11 and body ground.

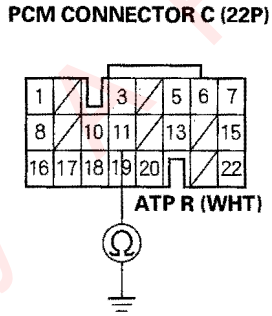

Wire side of female terminals

Is there continuity?

YES—Repair short in the wire between PCM connector terminal C11 and the transmission range switch, then go to step 38.

NO—Update the PCM if it does not have the latest software, or substitute a known-good PCM (see page 14-6), then recheck. If the symptom/indication goes away with a known-good PCM, replace the original PCM. ■

Protected by ...R

18. Measure the voltage between PCM connector terminals B23 and B15 or E3 in all positions other than N.

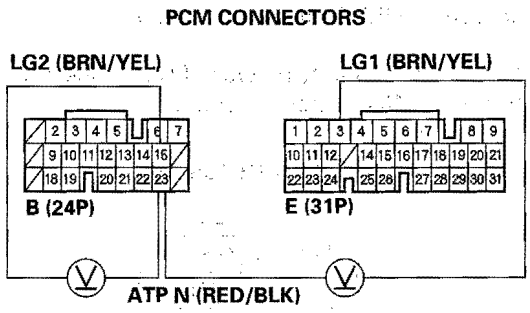

Wire side of female terminals

Is there battery voltage?

YES—Go to step 23.

NO—Go to step 19.

19. Turn the ignition switch OFF.

20. Jump the SCS line with the HDS.

21. Disconnect PCM connector B (24P).

22. Check for continuity between PCM connector terminal B23 and body ground.

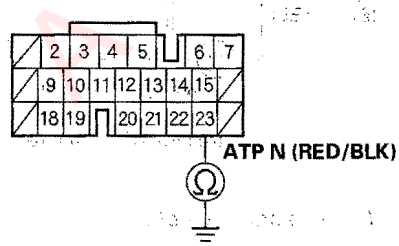

Wire side of female terminals

Is there continuity?

YES—Repair short in the wire between PCM connector terminal B23 and the transmission range switch, then go to step 38.

NO—Update the PCM if it does not have the latest software, or substitute a known-good PCM (see page 14-6), then recheck. If the symptom/indication goes away with a known-good PCM, replace the original PCM.■

(cont'd)

Protected by

DTC Troubleshooting (cont'd)

23. Measure the voltage between PCM connector terminals C10 and B15 or E3 in all positions other than D.

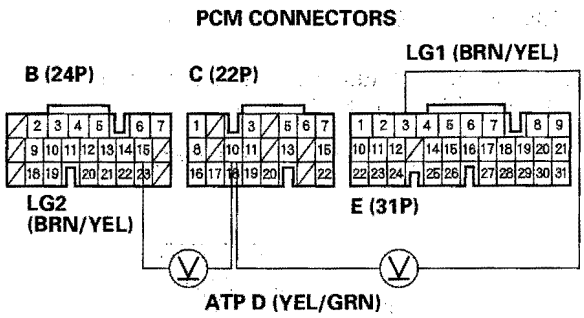

Wire side of female terminals

Is there battery voltage?

YES—Go to step 28.

NO—Go to step 24.

24. Turn the ignition switch OFF.

25. Jump the SCS line with the HDS.

26. Disconnect PCM connector C (22P).

27. Check for continuity between PCM connector terminal C10 and body ground.

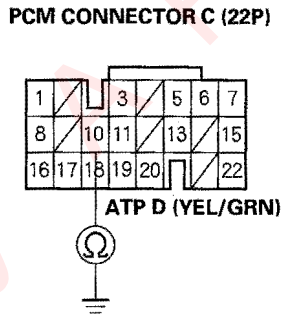

Wire side of female terminals

Is there continuity?

YES—Repair short in the wire between PCM connector terminal C10 and the transmission range switch, then go to step 38.

NO—Update the PCM if it does not have the latest software, or substitute a known-good PCM (see page 14-6), then recheck. If the symptom/indication goes away with a known-good PCM, replace the original PCM.■

Protected by

28. Measure the voltage between PCM connector terminals C18 and B15 or E3 in all positions other than L.

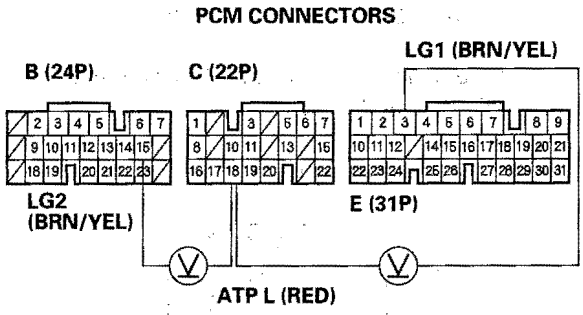

Wire side of female terminals

Is there battery voltage?

YES – Go to step 33.

NO – Go to step 29.

29. Turn the ignition switch OFF.

30. Jump the SCS line with the HDS.

31. Disconnect PCM connector C (22P).

32. Check for continuity between PCM connector terminal C18 and body ground.

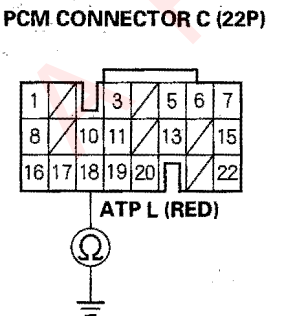

Wire side of female terminals

Is there continuity?

YES – Repair short in the wire between PCM connector terminal C18 and the transmission range switch, then go to step 38.

NO – Update the PCM if it does not have the latest software, or substitute a known-good PCM (see page 14-6), then recheck. If the symptom/indication goes away with a known-good PCM, replace the original PCM. ■

(cont'd)

Protected by ALLDATA

DTC Troubleshooting (cont'd)

33. Measure the voltage between PCM connector terminals C19 and B15 or E3 in all positions other than L.

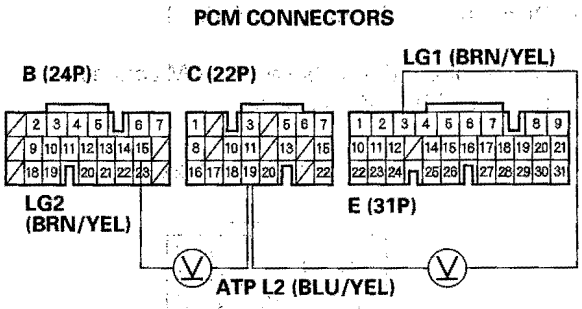

Wire side of female terminals

Is there battery voltage?

YES—Update the PCM if it does not have the latest software, or substitute a known-good PCM (see page 14-6), then recheck. If the symptom/indication goes away with a known-good PCM, replace the original PCM. ■

NO—Go to step 34.

34. Turn the ignition switch OFF.

35. Jump the SCS line with the HDS.

36. Disconnect PCM connector C (22P).

37. Check for continuity between PCM connector terminal C19 and body ground.

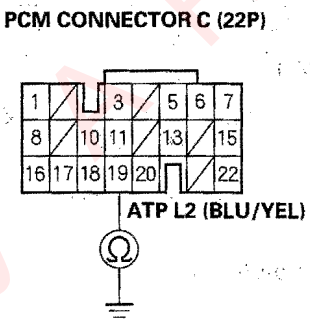

Wire side of female terminals

Is there continuity?

YES—Repair short in the wire between PCM connector terminal C19 and the transmission range switch, then go to step 38.

NO—Update the PCM if it does not have the latest software, or substitute a known-good PCM (see page 14-6), then recheck. If the symptom/indication goes away with a known-good PCM, replace the original PCM. ■

38. Clear the DTC with the HDS.

39. Move the shift lever to each position, and check the OBD STATUS in DTCs MENU for a pass/fail test of code P0705.

Did the result indicate a pass?

YES—The problem has been corrected. ■

NO—Return to step 1 and recheck. ■

Protected by ...R

DTC P0706: Transmission Range Switch Circuit (Open)

NOTE:
- Record all freeze data and review General Troubleshooting Information (see page 14-3) before you troubleshoot.
- This code is caused by an electrical circuit problem and cannot be caused by a mechanical problem in the transmission.

1. Clear the DTC with the HDS.
2. Raise the front of the vehicle, make sure it is securely supported, and allow the front wheels to rotate freely.
3. Start the engine, drive the vehicle in the D position until the vehicle speed reaches 35 mph (56 km/h), then slow down and stop the wheels.
4. Check the OBD STATUS in DTCs MENU for a pass/fail test of code P0706.

   Did the result indicate a fail?

   YES—Go to step 5.

   NO—Intermittent failure, the system is OK at this time. Check for poor connections or loose terminals at the transmission range switch and PCM. If the tester indicates NOT COMPLETE, return to step 1 and recheck. ■
5. Inspect the transmission range switch (see page 14-240).

   Is the switch OK?

   YES—Inspect the end of the selector control shaft (see step 6 on page 14-241), then go to step 6.

   NO—Replace the transmission range switch (see page 14-242), then go to step 17.
6. Install the transmission range switch correctly, and adjust the shift cable (see page 14-235).
7. Clear the DTC with the HDS.
8. Shift the shift lever into the D position, and verify the ATP D inputs with the HDS in the A/T data list.

   Is the ATP D ON?

   YES—Go to step 9.

   NO—Go to step 13.
9. Clear the DTC with the HDS, and turn the ignition switch OFF.
10. Raise the front of the vehicle, make sure it is securely supported, and allow the front wheels to rotate freely.
11. Start the engine, drive the vehicle in the D position until the vehicle speed reaches 35 mph (56 km/h), then slow down and stop the wheels.

(cont'd)

Protected by A R

DTC Troubleshooting (cont'd)

12. Check the OBD STATUS in DTCs MENU for a pass/fail test of code P0706.

    Did the result indicate a fail?

    YES—Go to step 13.

    NO—Intermittent fialure, the system is OK at this time. Check for poor connections or loose terminals at the transmission range switch and PCM. If the tester indicates NOT COMPLETE, return to step 12 and recheck.■

13. Turn the ignition switch OFF.

14. Disconnect the transmission range switch connector.

15. Check for continuity between transmission range switch connector terminal No. 6 and body ground.

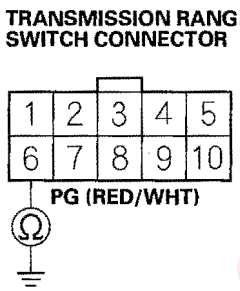

Wire side of female terminals

Is there continuity?

YES—Go to step 16.

NO—Repair open in the wire between transmission range switch connector terminal No. 6 and ground (G101, G102), or repair poor ground (G101, G102), then go to step 17.

16. Measure the voltage between transmission range switch connector terminals No. 3 and No. 6.

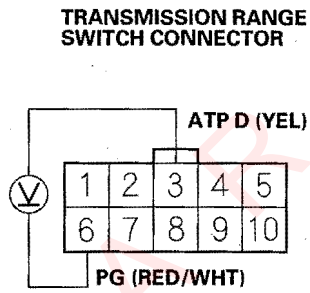

Wire side of female terminals

Is there battery voltage?

YES—Update the PCM if it does not have the latest software, or substitute a known-good PCM (see page 14-6), then recheck. If the symptom/indication goes away with a known-good PCM, replace the original PCM.■

NO—Repair open in the wire between the transmission range switch and PCM connector terminal C10, then go to step 17.

17. Clear the DTC with the HDS.

18. Turn the ignition switch OFF.

19. Raise the front of the vehicle, make sure it is securely supported, and allow the front wheels to rotate freely.

20. Start the engine, drive the vehicle in the D position until the vehicle speed reaches 35 mph (56 km/h), then slow down and stop the wheels.

21. Check the OBD STATUS in DTCs MENU for a pass/fail test of code P0706.

    Did the result indicate a pass?

    YES—The problem has been corrected.■

    NO—Return to step 1 and recheck.■

Protected by FAK

DTC P0711: ATF Temperature Sensor Circuit (Range/Performance)

NOTE:
- Record all freeze data and review General Troubleshooting Information (see page 14-3) before you troubleshoot.
- This code is caused by an electrical circuit problem and cannot be caused by a mechanical problem in the transmission.

1. Check the ATF temperature with the HDS in the A/T data list.

   Does the ATF temperature exceed the ambient-air temperature?

   YES—Record the ATF temperature. Leave the engine off for more than 30 minutes, and go to step 2.

   NO—Record the ATF temperature. Test the stall speed RPM (see page 14-176) three times. Go to step 2 after stall speed testing.

2. Check the ATF temperature with the HDS.

   Did the ATF temperature change?

   YES—Leave the engine off for more than 30 minutes, and go to step 3.

   NO—Replace the ATF temperature sensor (see page 14-199), then go to step 5.

3. Check the ECT SENSOR with the HDS.

   Is the ECT SENSOR equal to the ambient-air temperature?

   YES—Go to step 4.

   NO—Leave the engine off until ECT sensor equals ambient-air temperature, then go to step 4.

4. Check the ATF temperature with the HDS.

   Is the ATF temperature almost equal to ECT SENSOR?

   YES—Intermittent failure, the system is OK at this time. Check for poor connections or loose terminals at the ATF temperature sensor and PCM.■

   NO—Replace ATF temperature sensor (see page 14-199), then go to step 5.

5. Clear the DTC with the HDS.

6. Test-drive the vehicle for several minutes in the D position in all five gears.

7. Check the OBD STATUS in DTCs MENU for a pass/fail test of code P0711.

   Did the result indicate a pass?

   YES—The problem has been corrected.■

   NO—Return to step 1 and recheck.■

Protected by AR

DTC Troubleshooting (cont'd)

DTC P0712: ATF Temperature Sensor Circuit (Short)

NOTE:
- Record all freeze data and review General Troubleshooting Information (see page 14-3) before you troubleshoot.
- This code is caused by an electrical circuit problem and cannot be caused by a mechanical problem in the transmission.

1. Check ATF temperature sensor voltage with the HDS in the A/T data list.

   Is ATF temperature sensor voltage 0.07 V or less?

   YES—Go to step 2.

   NO—Intermittent failure, the system is OK at this time. Check for intermittent short in the wires between the ATF temperature sensor and PCM. ■

2. Disconnect the ATF temperature sensor connector at the transmission end cover.

3. Check ATF temperature sensor voltage with the HDS.

   Is ATF temperature sensor voltage 0.07 V or less?

   YES—Go to step 4.

   NO—Replace ATF temperature sensor (see page 14-199), then go to step 8.

4. Turn the ignition switch OFF.

5. Jump the SCS line with the HDS.

6. Disconnect PCM connector C (22P).

7. Check for continuity between ATF temperature sensor connector terminal No. 2 and body ground.

ATF TEMPERATURE SENSOR CONNECTOR

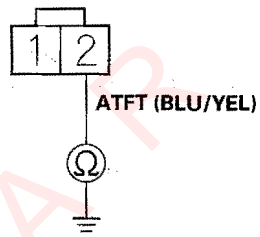

Wire side of female terminals

Is there continuity?

YES—Repair short to ground between PCM connector terminal C3 and the ATF temperature sensor connector terminal No. 2 then, go to step 8.

NO—Update the PCM if it does not have the latest software, or substitute a known-good PCM (see page 14-6), then recheck. If the symptom/indication goes away with a known-good PCM, replace the original PCM. ■

8. Clear the DTC with the HDS.

9. Test-drive the vehicle for several minutes in the D position in all five gears.

10. Check the OBD STATUS in DTCs MENU for a pass/fail test of code P0712.

    Did the result indicate a pass?

    YES—The problem has been corrected. ■

    NO—Return to step 1 and recheck. ■

Protected by AP

DTC P0713: ATF Temperature Sensor Circuit (Open)

NOTE:
- Record all freeze data and review General Troubleshooting Information (see page 14-3) before you troubleshoot.
- This code is caused by an electrical circuit problem and cannot be caused by a mechanical problem in the transmission.

1. Check ATF temperature sensor voltage with the HDS in the A/T data list.

   Does ATF temperature sensor voltage exceed 4.93 V?

   YES—Go to step 2.

   NO—Intermittent failure, the system is OK at this time. Check for poor connections or loose terminals at the ATF temperature sensor and PCM. ■

2. Turn the ignition switch OFF.

3. Disconnect the ATF temperature sensor connector at the transmission end cover.

4. Turn the ignition switch ON (II).

5. Measure the voltage between ATF temperature sensor connector terminal No. 2 and body ground.

ATF TEMPERATURE SENSOR CONNECTOR

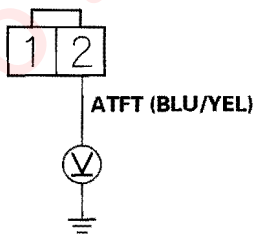

Wire side of female terminals

Is there about 5 V?

YES—Go to step 6.

NO—Go to step 7.

6. Measure the voltage between ATF temperature sensor connector terminals No. 1 and No. 2.

ATF TEMPERATURE SENSOR CONNECTOR

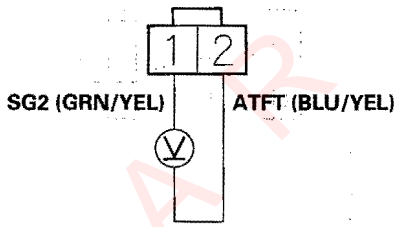

Wire side of female terminals

Is there about 5 V?

YES—Replace the ATF temperature sensor (see page 14-199), then go to step 8.

NO—Repair open in the wire between PCM connector terminal D10 and the ATF temperature sensor connector. ■

(cont'd)

Protected by AR

DTC Troubleshooting (cont'd)

7. Measure the voltage between PCM connector terminal C3 and body ground.

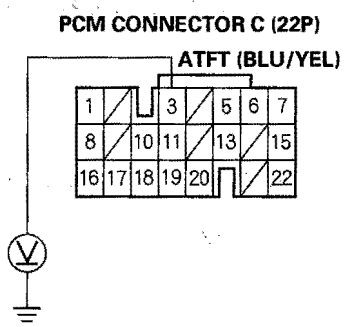

Wire side of female terminals

Is there about 5 V?

YES—Repair open in the wire between PCM connector terminal C3 and the ATF temperature sensor connector, then go to step 8.

NO—Check for loose or poor connections at PCM connector terminal C3. If the connection is OK, update the PCM if it does not have the latest software, or substitute a known-good PCM (see page 14-6), then recheck. If the symptom/indication goes away with a known-good PCM, replace the original PCM.■

8. Clear the DTC with the HDS.

9. Test-drive the vehicle for several minutes in the D position in all five gears.

10. Check the OBD STATUS in DTCs MENU for a pass/fail test of code P0713.

Did the result indicate a pass?

YES—The problem has been corrected.■

NO—Return to step 1 and recheck.■

Protected by AR

DTC P0716: Input Shaft (mainshaft) Speed Sensor Circuit (Range/Performance)

NOTE:
- Record all freeze data and review General Troubleshooting Information (see page 14-3) before you troubleshoot.
- This code is caused by an electrical circuit problem and cannot be caused by a mechanical problem in the transmission.

1. Record all freeze data, and clear the DTC with the HDS.
2. Check for proper input shaft (mainshaft) speed sensor installation (see page 14-195).
3. Raise the front of the vehicle, make sure it is securely supported, and allow the front wheels to rotate freely.
4. Start the engine, drive the vehicle in the D position, and hold the vehicle at speeds over 30 mph (48 km/h) for more than 10 seconds.
5. Check the OBD STATUS in DTCs MENU for a pass/fail test of code P0716.

   Did the result indicate a fail?

   YES—Go to step 6.

   NO—Intermittent failure, the system is OK at this time. Check for poor connections or loose terminals at the input shaft (mainshaft) speed sensor and PCM. If the tester indicates NOT COMPLETE, return to step 4 and recheck.■
6. Turn the ignition switch OFF.
7. Jump the SCS line with the HDS.
8. Disconnect PCM connectors B (24P) and E (31P), and the input shaft (mainshaft) speed sensor connector.
9. Check for continuity between PCM connector terminals B15 and body ground, and between E3 and body ground.

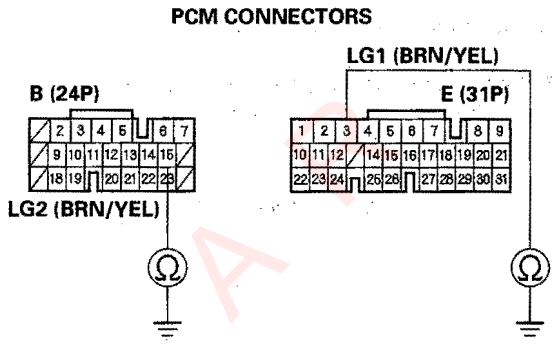

   Is there continuity?

   YES—Go to step 10.

   NO—Repair open in the wire between PCM connector terminals B15, E3, and ground (G101, G102), or repair poor ground (G101, G102), then go to step 30.
10. Connect PCM connectors B (24P) and E (31P).
11. Turn the ignition switch ON (II).
12. Measure the voltage between input shaft (mainshaft) speed sensor connector terminal No. 1 and body ground.

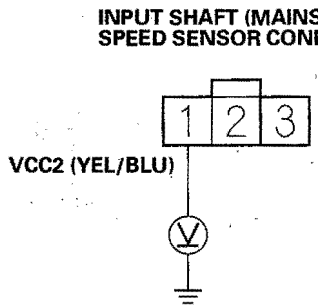

   Is there about 5 V?

   YES—Go to step 13.

   NO—Go to step 24.

(cont'd)

Protected by A

DTC Troubleshooting (cont'd)

13. Turn the ignition switch OFF.
14. Jump the SCS line with the HDS.
15. Disconnect PCM connector D (17P).
16. Check for continuity between input shaft (mainshaft) speed sensor connector terminal No. 2 and body ground.

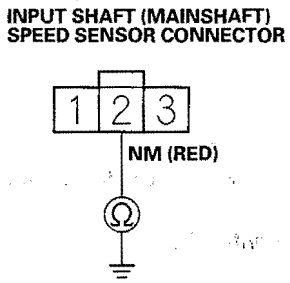

Wire side of female terminals

Is there continuity?

YES – Repair short to ground in the wire between PCM connector terminal D8 and input shaft (mainshaft) speed sensor, then go to step 31.

NO – Go to step 17.

17. Check for continuity between input shaft (mainshaft) speed sensor connector terminal No. 3 and PCM connector terminal D10.

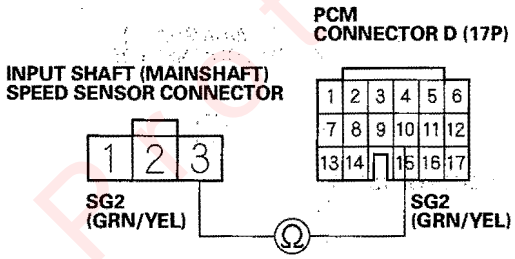

Wire side of female terminals

Is there continuity?

YES – Go to step 18.

NO – Repair open in the wire between the input shaft (mainshaft) speed sensor connector and PCM connector terminal D10, then go to step 31.

18. Reconnect PCM connector D (17P).
19. Turn the ignition switch ON (II).
20. Measure the voltage between input shaft (mainshaft) speed sensor connector terminals No. 2 and No. 3.

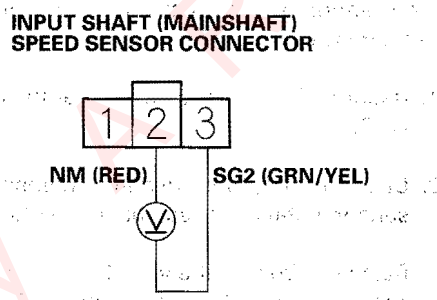

Wire side of female terminals

Is there about 5 V?

YES – Go to step 21.

NO – Go to step 30.

21. Connect the input shaft (mainshaft) speed sensor connector.
22. Measure the voltage between PCM connector terminals D8 and B15 or E3.

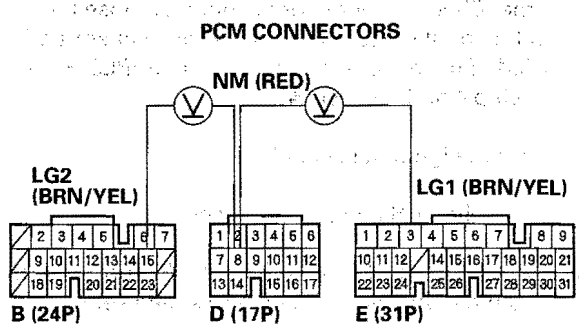

Wire side of female terminals

Is the voltage 0 V or about 5 V?

YES – Go to step 23.

NO – Replace the input shaft (mainshaft) speed sensor (see page 14-195), then go to step 31.

Protected by AP

23. Shift to the P position. Start the engine, and let it idle.

24. With the engine idling, measure the voltage between PCM connector terminals D8 and B15 or E3.

PCM CONNECTORS

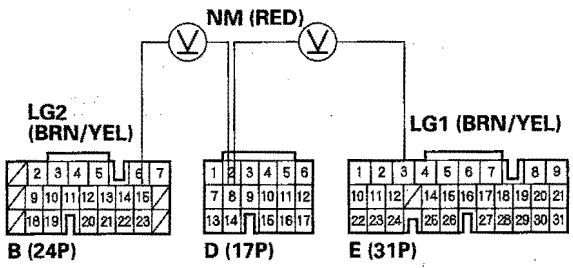

Wire side of female terminals

Is there 1.5—3.5 V?

YES—Update the PCM if it does not have the latest software, or substitute a known-good PCM (see page 14-6), then recheck. If the symptom/indication goes away with a known-good PCM, replace the original PCM.■

NO—Replace the input shaft (mainshaft) speed sensor (see page 14-195), then go to step 31.

25. Measure the voltage between PCM connector terminals D12 and B15 or E3.

PCM CONNECTORS

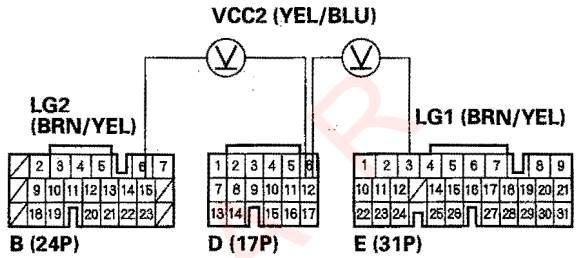

Wire side of female terminals

Is there about 5 V?

YES—Repair open in the wire between PCM connector terminal D12 and the input shaft (mainshaft) speed sensor, then go to step 31.

NO—Go to step 26.

26. Turn the ignition switch OFF.

27. Jump the SCS line with the HDS.

28. Disconnect PCM connector D (17P).

(cont'd)

Protected by ARR

DTC Troubleshooting (cont'd)

29. Check for continuity between PCM connector terminal D12 and body ground.

PCM CONNECTOR D (17P)

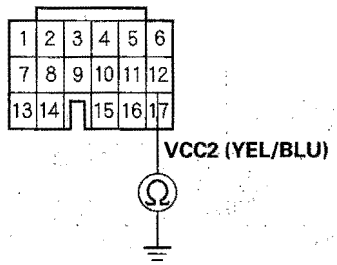

Wire side of female terminals

Is there continuity?

YES—Repair short to ground in the wire between PCM connector terminal D12 and the input shaft (mainshaft) speed sensor, then go to step 31.

NO—Check for loose or poor connections at PCM connector terminal D12. If the connection is OK, update the PCM if it does not have the latest software, or substitute a known-good PCM (see page 14-6), then recheck. If the symptom/indication goes away with a known-good PCM, replace the original PCM.■

30. Measure the voltage between PCM connector terminals D8 and B15 or E3.

PCM CONNECTORS

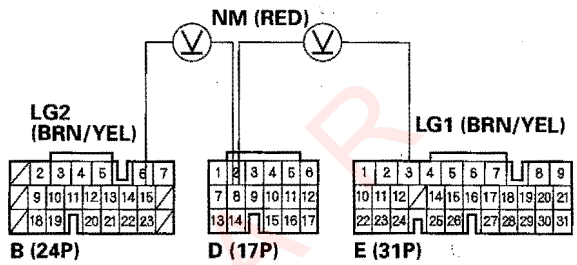

Wire side of female terminals

Is there about 5 V?

YES—Repair open in the wire between PCM connector terminal D8 and the input shaft (mainshaft) speed sensor, then go to step 31.

NO—Check for loose or poor connections at PCM connector terminal D8. If the connection is OK, update the PCM if it does not have the latest software, or substitute a known-good PCM (see page 14-6), then recheck. If the symptom/indication goes away with a known-good PCM, replace the original PCM.■

31. Clear the DTC with the HDS.

32. Test-drive the vehicle for several minutes under the same conditions as those indicated by the freeze data.

33. Check the OBD STATUS in DTCs MENU for a pass/fail test of code P0716.

Did the result indicate a pass?

YES—The problem has been corrected.■

NO—Return to step 1 and recheck.■

Protected by ARS

DTC P0717: Input Shaft (Mainshaft) Speed Sensor Circuit (No Signal Input)

NOTE:
- Record all freeze data and review General Troubleshooting Information (see page 14-3) before you troubleshoot.
- This code is caused by an electrical circuit problem and cannot be caused by a mechanical problem in the transmission.

1. Record all freeze data, and clear the DTC with the HDS.
2. Check for proper input shaft (mainshaft) speed sensor installation (see page 14-195).
3. Raise the front of the vehicle, make sure it is securely supported, and allow the front wheels to rotate freely.
4. Start the engine, drive the vehicle in the D position, and hold the vehicle at speeds over 30 mph (48 km/h) for more than 10 seconds. Slow down and stop the wheels.
5. Check the OBD STATUS in DTCs MENU for a pass/fail test of code P0717.

   Did the result indicate a fail?

   YES—Go to step 6.

   NO—Intermittent failure, the system is OK at this time. Check for poor connections or loose terminals at the input shaft (mainshaft) speed sensor. If the tester indicates NOT COMPLETE, return to step 4 and recheck. ■
6. Turn the ignition switch OFF.
7. Jump the SCS line with the HDS.
8. Disconnect PCM connectors B (24P) and E (31P), and the input shaft (mainshaft) speed sensor connector.
9. Check for continuity between PCM connector terminals B15 and body ground, and between E3 and body ground.

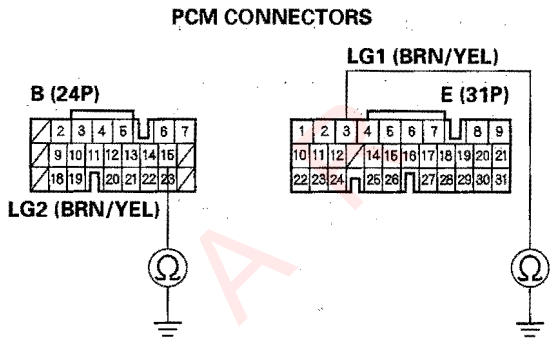

Wire side of female terminals

Is there continuity?

YES—Go to step 10.

NO—Repair open in the wire between PCM connector terminals B15, E3, and ground (G101, G102), or repair poor ground (G101, G102), then go to step 30.

10. Connect PCM connectors B (24P) and E (31P).
11. Turn the ignition switch ON (II).
12. Measure the voltage between input shaft (mainshaft) speed sensor connector terminal No. 1 and body ground.

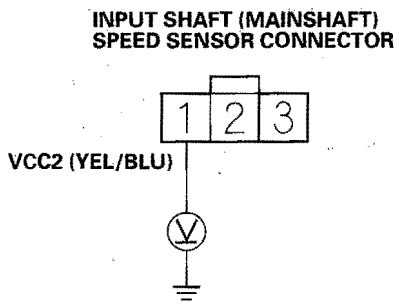

Wire side of female terminals

Is there about 5 V?

YES—Go to step 13.

NO—Go to step 24.

(cont'd)

Protected by AP

DTC Troubleshooting (cont'd)

13. Turn the ignition switch OFF.
14. Jump the SCS line with the HDS.
15. Disconnect PCM connector D (17P).
16. Check for continuity between input shaft (mainshaft) speed sensor connector terminal No. 2 and body ground.

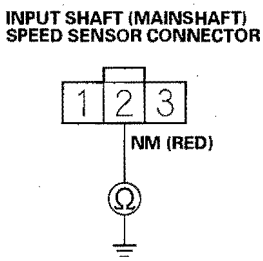

Wire side of female terminals

Is there continuity?

YES—Repair short to ground in the wire between PCM connector terminal D8 and input shaft (mainshaft) speed sensor, then go to step 31.

NO—Go to step 17.

17. Check for continuity between input shaft (mainshaft) speed sensor connector terminal No. 3 and PCM connector terminal D10.

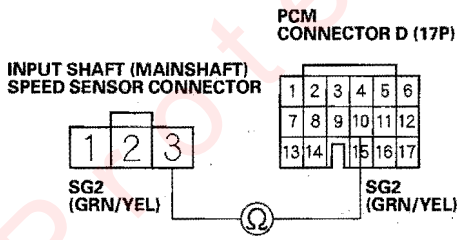

Wire side of female terminals

Is there continuity?

YES—Go to step 17.

NO—Repair open in the wire between the input shaft (mainshaft) speed sensor connector and PCM connector terminal D10, then go to step 31.

18. Connect PCM connector D (17P).
19. Turn the ignition switch ON (II).
20. Measure the voltage between input shaft (mainshaft) speed sensor connector terminals No. 2 and No. 3.

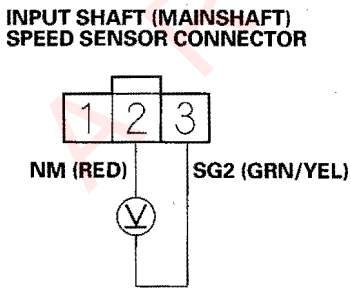

Wire side of female terminals

Is there about 5 V?

YES—Go to step 21.

NO—Go to step 30.

21. Connect the input shaft (mainshaft) speed sensor connector.
22. Measure the voltage between PCM connector terminals D8 and B15 or E3.

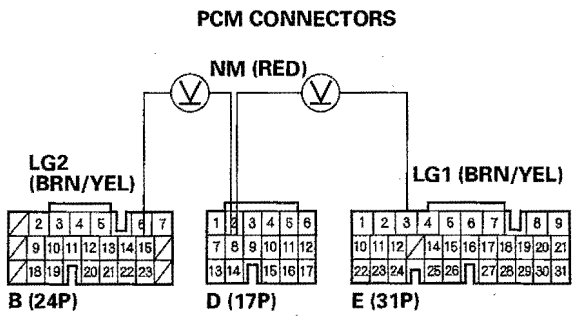

Wire side of female terminals

Is the voltage 0 V or about 5 V?

YES—Go to step 23.

NO—Replace the input shaft (mainshaft) speed sensor (see page 14-195), then go to step 31.

Protected by FAR

23. Shift to the P position. Start the engine, and let it idle.

24. With the engine idling, measure the voltage between PCM connector terminals D8 and B15 or E3.

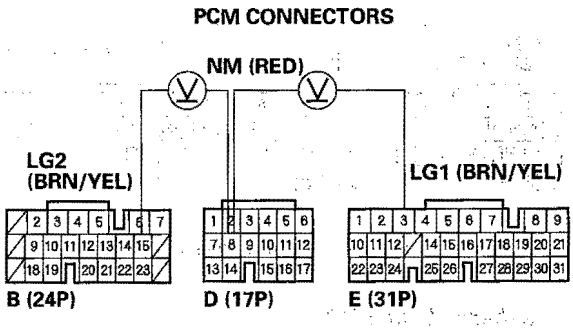

Wire side of female terminals

Is there 1.5—3.5 V?

YES—Update the PCM if it does not have the latest software, or substitute a known-good PCM (see page 14-6), then recheck. If the symptom/indication goes away with a known-good PCM, replace the original PCM. ■

NO—Replace the input shaft (mainshaft) speed sensor (see page 14-195), then go to step 31.

25. Measure the voltage between PCM connector terminals D12 and B15 or E3.

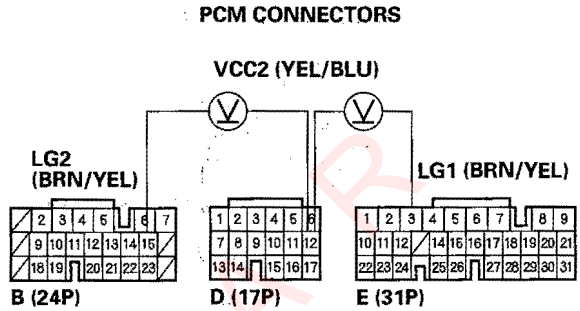

Wire side of female terminals

Is there about 5 V?

YES—Repair open in the wire between PCM connector terminal D12 and the input shaft (mainshaft) speed sensor, then go to step 31.

NO—Go to step 26.

26. Turn the ignition switch OFF.

27. Jump the SCS line with the HDS.

28. Disconnect PCM connector D (17P).

(cont'd)

Protected by ARR

DTC Troubleshooting (cont'd)

29. Check for continuity between PCM connector terminal D12 and body ground.

PCM CONNECTOR D (17P)

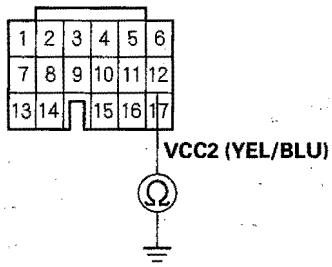

Wire side of female terminals

Is there continuity?

YES—Repair short to ground in the wire between PCM connector terminal D12 and the input shaft (mainshaft) speed sensor, then go to step 31.

NO—Check for loose or poor connections at PCM connector terminal D12. If the connection is OK, update the PCM if it does not have the latest software, or substitute a known-good PCM (see page 14-6), then recheck. If the symptom/indication goes away with a known-good PCM, replace the original PCM.■

30. Measure the voltage between PCM connector terminals D8 and B15 or E3.

PCM CONNECTORS

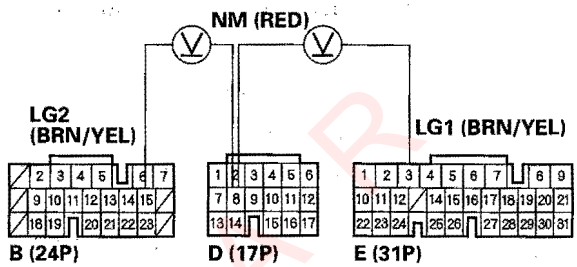

Wire side of female terminals

Is there about 5 V?

YES—Repair open in the wire between PCM connector terminal D8 and the input shaft (mainshaft) speed sensor, then go to step 31.

NO—Check for loose or poor connections at PCM connector terminal D8. If the connection is OK, update the PCM if it does not have the latest software, or substitute a known-good PCM (see page 14-6), then recheck. If the symptom/indication goes away with a known-good PCM, replace the original PCM.■

31. Clear the DTC with the HDS.

32. Test-drive the vehicle for several minutes under the same conditions as those indicated by the freeze data.

33. Check the OBD STATUS in DTCs MENU for a pass/fail test of code P0717.

Did the result indicate a pass?

YES—The problem has been corrected.■

NO—Return to step 1 and recheck.■

Protected by ARP

DTC P0718: Input Shaft (Mainshaft) Speed Sensor (Intermittent Failure)

NOTE:
- Record all freeze data and review General Troubleshooting Information (see page 14-3) before you troubleshoot.
- This code is caused by an electrical circuit problem and cannot be caused by a mechanical problem in the transmission.

1. Clear the DTC with the HDS.
2. Test-drive the vehicle for several minutes in the D position in all five gears.
3. Check the OBD STATUS in DTCs MENU for a pass/fail test of code P0718.

   Did the result indicate a fail?

   YES—Go to step 4.

   NO—Intermittent failure, the system is OK at this time. Check for poor connections or loose terminals at the input shaft (mainshaft) speed sensor and PCM. If the tester indicates NOT COMPLETE, return to step 2 and recheck.■
4. Turn the ignition switch OFF.
5. Disconnect the input shaft (mainshaft) speed sensor connector, and inspect the connector and connector terminals to be sure they are making good contact.

   Are the connector terminals OK?

   YES—Go to step 6.

   NO—Repair the connector terminals, then go to step 6.
6. Connect the input shaft (mainshaft) speed sensor connector.
7. Test-drive the vehicle for several minutes, and check the OBD STATUS in DTCs MENU for a pass/fail test of code P0718.

   Did the result indicate a fail?

   YES—Go to step 8.

   NO—The problem has been corrected. If the tester indicates NOT COMPLETE, return to step 7 and recheck.■
8. Turn the ignition switch OFF.
9. Jump the SCS line with the HDS.
10. Disconnect PCM connector D (17P).
11. Disconnect the input shaft (mainshaft) speed sensor connector.
12. Check for continuity between input shaft (mainshaft) speed sensor connector terminal No. 2 and body ground.

INPUT SHAFT (MAINSHAFT) SPEED SENSOR CONNECTOR

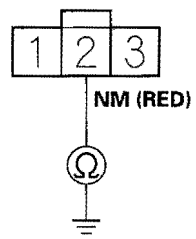

Wire side of female terminals

Is there continuity?

YES—Repair short to ground in the wire between PCM connector terminal D8 and the input shaft (mainshaft) speed sensor, then go to step 19.

NO—Go to step 11.

(cont'd)

Protected by AR

DTC Troubleshooting (cont'd)

13. Connect PCM connector D (17P).
14. Turn the ignition switch ON (II).
15. Measure the voltage between input shaft (mainshaft) speed sensor connector terminal No. 2 and body ground.

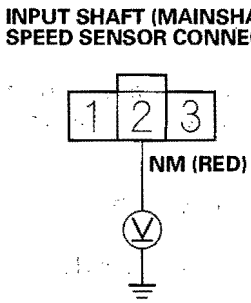

Wire side of female terminals

Is there about 5 V?

YES—Replace the input shaft (mainshaft) speed sensor (see page 14-195), then go to step 19.

NO—Go to step 16.

16. Turn the ignition switch OFF.
17. Disconnect PCM connector D (17P).
18. Check for continuity between PCM connector terminal D8 and input shaft (mainshaft) speed sensor connector terminal No. 2.

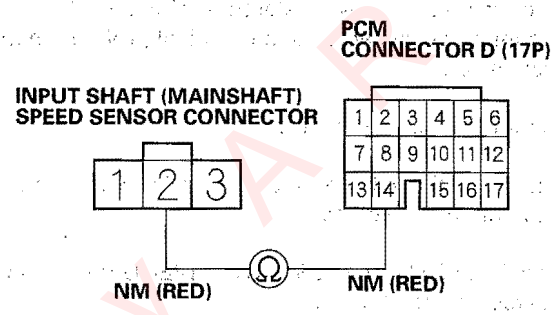

Wire side of female terminals

Is there continuity?

YES—Update the PCM if it does not have the latest software, or substitute a known-good PCM (see page 14-6), then recheck. If the symptom/indication goes away with a known-good PCM, replace the original PCM. ■

NO—Repair open in the wire between PCM connector terminal D8 and the input shaft (mainshaft) speed sensor, then go to step 19.

19. Clear the DTC with the HDS.
20. Test-drive the vehicle for several minutes in the D position in all five gears.
21. Check the OBD STATUS in DTCs MENU for a pass/fail test of code P0718.

Did the result indicate a pass?

YES—The problem has been corrected. ■

NO—Return to step 1 and recheck. ■

Protected by AP

DTC P0721: Output Shaft (Countershaft) Speed Sensor Circuit (Range/Performance)

NOTE:
- Record all freeze data and review General Troubleshooting Information (see page 14-3) before you troubleshoot.
- This code is caused by an electrical circuit problem and cannot be caused by a mechanical problem in the transmission.

1. Record all freeze data, and clear the DTC with the HDS.
2. Raise the front of the vehicle, make sure it is securely supported, and allow the front wheels to rotate freely.
3. Start the engine, drive the vehicle in the D position, and hold the vehicle at speeds over 30 mph (48 km/h) for more than 10 seconds. Slow down and stop the wheels.
4. Check the OBD STATUS in DTCs MENU for a pass/fail test of code P0721.

   Did the result indicate a fail?

   YES—Go to step 5.

   NO—Intermittent failure, the system is OK at this time. Check for poor connections or loose terminals at the output shaft (countershaft) speed sensor and PCM. If the tester indicates NOT COMPLETE, return to step 3 and recheck. ■
5. Turn the ignition switch OFF.
6. Jump the SCS line with the HDS.
7. Disconnect PCM connectors B (24P) and E (31P), and the output shaft (countershaft) speed sensor connector.
8. Check for continuity between PCM connector terminals B15 and body ground, and between E3 and body ground.

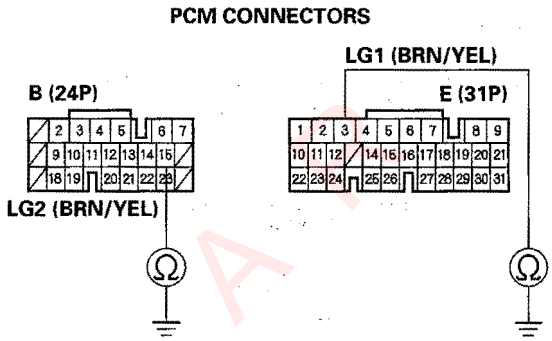

Wire side of female terminals

Is there continuity?

YES—Go to step 9.

NO—Repair open in the wire between PCM connector terminals B15, E3, and ground (G101, G102), or repair poor ground (G101, G102), then go to step 30.

9. Connect PCM connectors B (24P) and E (31P).
10. Turn the ignition switch ON (II).
11. Measure the voltage between output shaft (countershaft) speed sensor connector terminal No. 1 and body ground.

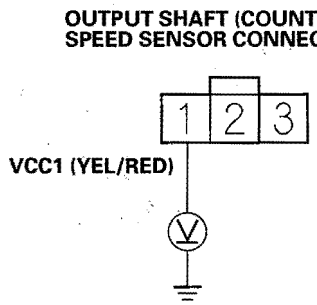

Wire side of female terminals

Is there about 5 V?

YES—Go to step 12.

NO—Go to step 24.

(cont'd)

Protected by AP

DTC Troubleshooting (cont'd)

12. Turn the ignition switch OFF.
13. Jump the SCS line with the HDS.
14. Disconnect PCM connector D (17P).
15. Check for continuity between output shaft (countershaft) speed sensor connector terminal No. 2 and body ground.

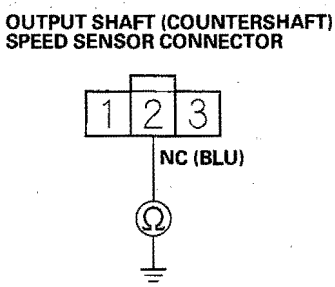

Wire side of female terminals

Is there continuity?

YES – Repair short to ground in the wire between PCM connector terminal D14 and output shaft (countershaft) speed sensor, then go to step 30.

NO – Go to step 16.

16. Check for continuity between output shaft (countershaft) speed sensor connector terminal No. 3 and PCM connector terminal D4.

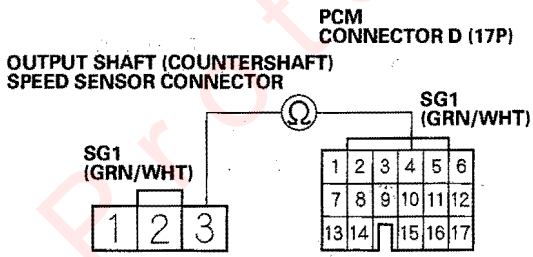

Wire side of female terminals

Is there continuity?

YES – Go to step 17.

NO – Repair open in the wire between the output shaft (countershaft) speed sensor connector and PCM connector terminal D4, then go to step 30.

17. Connect PCM connector D (17P).
18. Turn the ignition switch ON (II).
19. Measure the voltage between output shaft (countershaft) speed sensor connector terminals No. 2 and No. 3.

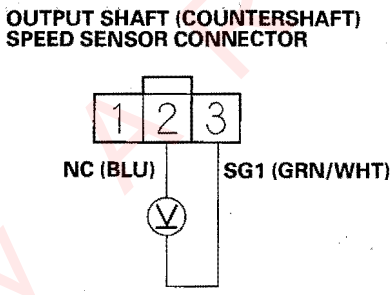

Wire side of female terminals

Is there about 5 V?

YES – Go to step 20.

NO – Go to step 29.

20. Connect the output shaft (countershaft) speed sensor connector.
21. Measure the voltage between PCM connector terminals D14 and B15 or E3.

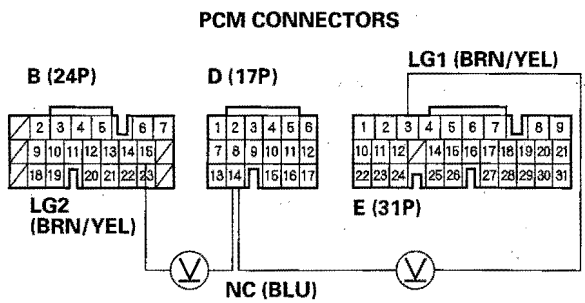

Wire side of female terminals

Is the voltage 0 V or about 5 V?

YES – Go to step 22.

NO – Replace the output shaft (countershaft) speed sensor (see page 14-196), then go to step 30.

Protected by MP

22. Shift to the P position. Start the engine, and let it idle.

23. Shift to the D position, and measure the voltage between PCM connector terminals D14 and B15 or E3.

PCM CONNECTORS

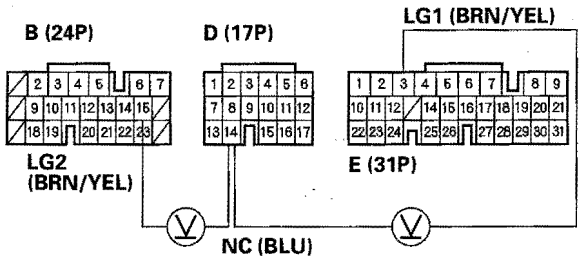

Wire side of female terminals

Is there 1.5—3.5 V?

YES—Update the PCM if it does not have the latest software, or substitute a known-good PCM (see page 14-6), then recheck. If the symptom/indication goes away with a known-good PCM, replace the original PCM.■

NO—Replace the output shaft (countershaft) speed sensor (see page 14-196), then go to step 30.

24. Measure the voltage between PCM connector terminals D6 and B15 or E3.

PCM CONNECTORS

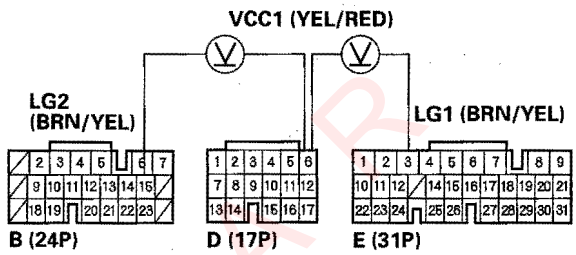

Wire side of female terminals

Is there about 5 V?

YES—Repair open in the wire between PCM connector terminal D6 and the output shaft (countershaft) speed sensor, then go to step 30.

NO—Go to step 25.

Protected by ARP

(cont'd)

DTC Troubleshooting (cont'd)

25. Turn the ignition switch OFF.
26. Jump the SCS line with the HDS.
27. Disconnect PCM connector D (17P).
28. Check for continuity between PCM connector terminal D6 and body ground.

PCM CONNECTOR D (17P)

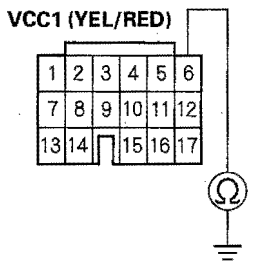

Wire side of female terminals

Is there continuity?

YES—Repair short to ground in the wire between PCM connector terminal D6 and the output shaft (countershaft) speed sensor, then go to step 30.

NO—Check for loose or poor connections at PCM connector terminal D6. If the connection is OK, update the PCM if it does not have the latest software, or substitute a known-good PCM (see page 14-6), then recheck. If the symptom/indication goes away with a known-good PCM, replace the original PCM. ■

29. Measure the voltage between PCM connector terminals D14 and B15 or E3.

PCM CONNECTORS

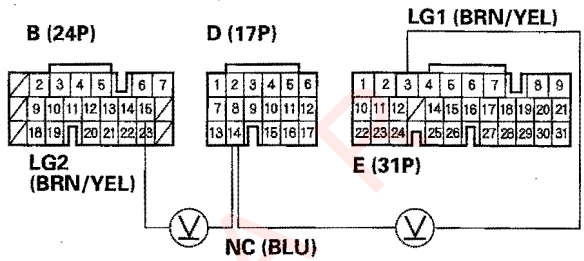

Wire side of female terminals

Is there about 5 V?

YES—Repair open in the wire between PCM connector terminal D14 and the output shaft (countershaft) speed sensor, then go to step 30.

NO—Check for loose or poor connections at PCM connector terminal D14. If the connection is OK, update the PCM if it does not have the latest software, or substitute a known-good PCM (see page 14-6), then recheck. If the symptom/indication goes away with a known-good PCM, replace the original PCM. ■

30. Clear the DTC with the HDS.
31. Test-drive the vehicle for several minutes under the same conditions as those indicated by the freeze data.
32. Check the OBD STATUS in DTCs MENU for a pass/fail test of code P0721.

Did the result indicate a pass?

YES—The problem has been corrected. ■

NO—Return to step 1 and recheck. ■

Protected by A F

DTC P0722: Output Shaft (Countershaft) Speed Sensor Circuit (No Signal Input)

NOTE:
- Record all freeze data and review General Troubleshooting Information (see page 14-3) before you troubleshoot.
- This code is caused by an electrical circuit problem and cannot be caused by a mechanical problem in the transmission.

1. Clear the DTC with the HDS.
2. Raise the front of the vehicle, make sure it is securely supported, and allow the front wheels to rotate freely.
3. Start the engine, drive the vehicle in the D position, and hold the vehicle at speeds over 30 mph (48 km/h) for more than 10 seconds. Slow down and stop the wheels.
4. Check the OBD STATUS in DTCs MENU for a pass/fail test of code P0722.

   Did the result indicate a fail?

   YES – Go to step 5.

   NO – Intermittent failure, the system is OK at this time. Check for poor connections or loose terminals at the output shaft (countershaft) speed sensor and PCM. If the tester indicates NOT COMPLETE, return to step 3 and recheck. ■
5. Turn the ignition switch OFF.
6. Jump the SCS line with the HDS.
7. Disconnect PCM connectors B (24P) and E (31P), and output shaft (countershaft) speed sensor connector.
8. Check for continuity between PCM connector terminals B15 and body ground, and between E3 and body ground.

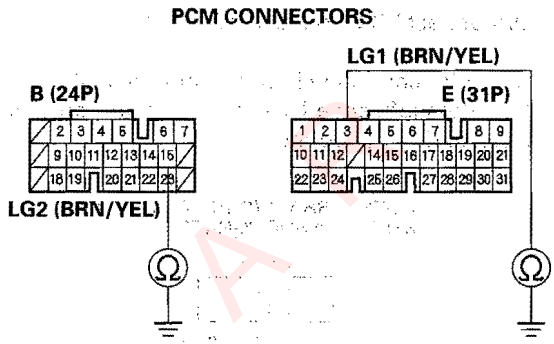

Wire side of female terminals

Is there continuity?

YES – Go to step 9.

NO – Repair open in the wires between PCM connector terminals B15, E3, and ground (G101, G102), or repair poor ground (G101, G102), then go to step 30.

9. Connect PCM connectors B (24P) and E (31P).
10. Turn the ignition switch ON (II).
11. Measure the voltage between output shaft (countershaft) speed sensor connector terminal No. 1 and body ground.

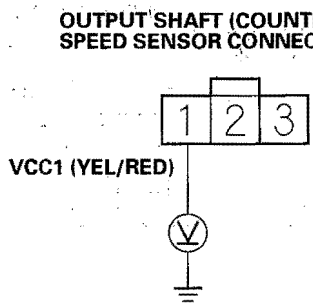

Wire side of female terminals

Is there about 5 V?

YES – Go to step 12.

NO – Go to step 24.

(cont'd)

Protected by A

DTC Troubleshooting (cont'd)

12. Turn the ignition switch OFF.
13. Jump the SCS line with the HDS.
14. Disconnect PCM connector D (17P).
15. Check for continuity between output shaft (countershaft) speed sensor connector terminal No. 2 and body ground.

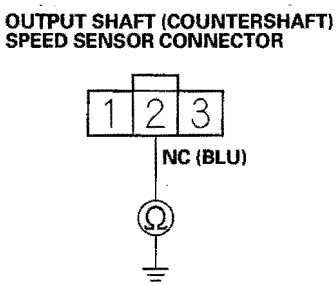

Wire side of female terminals

Is there continuity?

YES—Repair short to ground in the wire between PCM connector terminal D14 and output shaft (countershaft) speed sensor, then go to step 30.

NO—Go to step 16.

16. Check for continuity between output shaft (countershaft) speed sensor connector terminal No. 3 and PCM connector terminal D4.

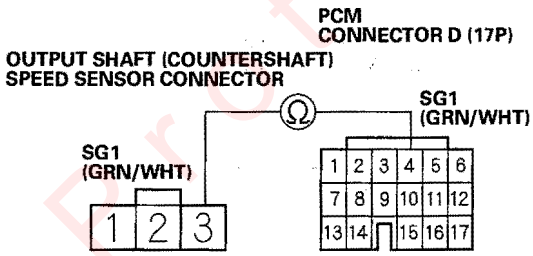

Wire side of female terminals

Is there continuity?

YES—Go to step 17.

NO—Repair open in the wire between the output shaft (countershaft) speed sensor connector and PCM connector terminal D4, then go to step 30.

17. Connect PCM connector D(17P).
18. Turn the ignition switch ON (II).
19. Measure the voltage between output shaft (countershaft) speed sensor connector terminals No. 2 and No. 3.

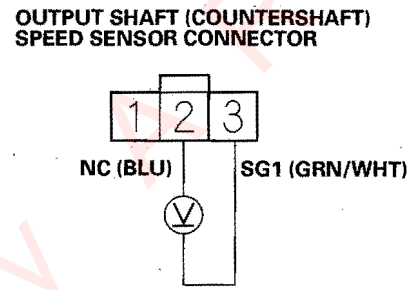

Wire side of female terminals

Is there about 5 V?

YES—Go to step 20.

NO—Go to step 29.

20. Connect the output shaft (countershaft) speed sensor connector.
21. Measure the voltage between PCM connector terminals D14 and B15 or E3.

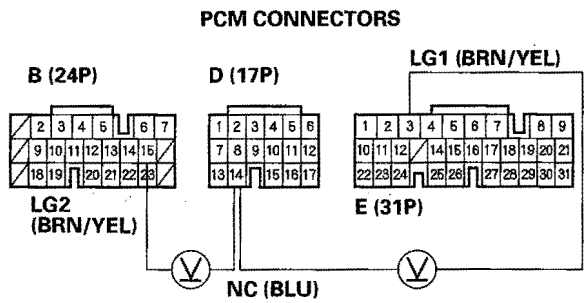

Wire side of female terminals

Is the voltage 0 V or about 5 V?

YES—Go to step 22.

NO—Replace the output shaft (countershaft) speed sensor (see page 14-196), then go to step 30.

Protected by AP

22. Shift to the P position. Start the engine, and let it idle.

23. Shift to the D position, and measure the voltage between PCM connector terminals D14 and B15 or E3.

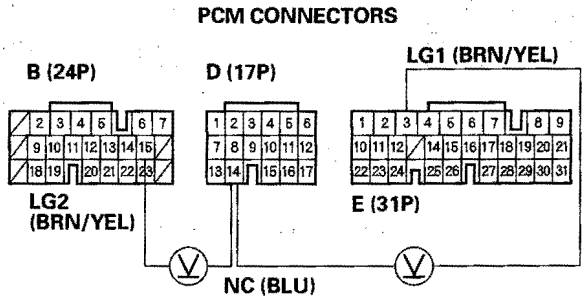

Wire side of female terminals

Is there 1.5—3.5 V?

YES—Update the PCM if it does not have the latest software, or substitute a known-good PCM (see page 14-6), then recheck. If the symptom/indication goes away with a known-good PCM, replace the original PCM. ■

NO—Replace the output shaft (countershaft) speed sensor (see page 14-196), then go to step 30.

24. Measure the voltage between PCM connector terminals D6 and B15 or E3.

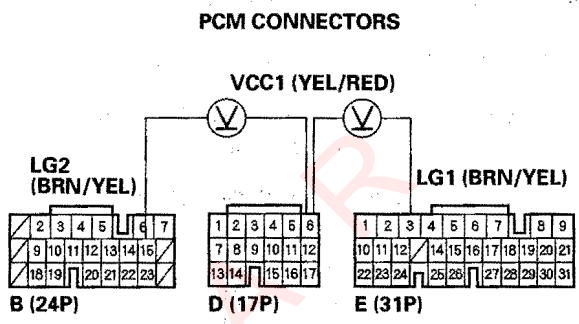

Wire side of female terminals

Is there about 5 V?

YES—Repair open in the wire between PCM connector terminal D6 and the output shaft (countershaft) speed sensor, then go to step 30.

NO—Go to step 25.

(cont'd)

Protected by ARP

DTC Troubleshooting (cont'd)

25. Turn the ignition switch OFF.
26. Jump the SCS line with the HDS.
27. Disconnect PCM connector D (17P).
28. Check for continuity between PCM connector terminal D6 and body ground.

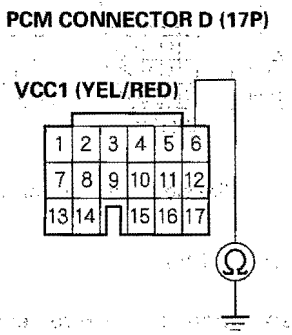

Wire side of female terminals

Is there continuity?

YES—Repair short to ground in the wire between PCM connector terminal D6 and the output shaft (countershaft) speed sensor, then go to step 30.

NO—Check for loose or poor connections at PCM connector terminal D6. If the connection is OK, update the PCM if it does not have the latest software, or substitute a known-good PCM (see page 14-6), then recheck. If the symptom/indication goes away with a known-good PCM, replace the original PCM. ■

29. Measure the voltage between PCM connector terminals D14 and B15 or E3.

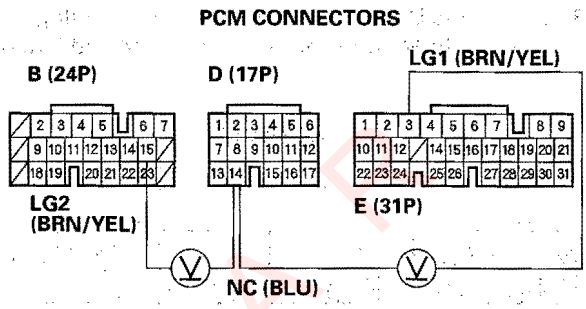

Wire side of female terminals

Is there about 5 V?

YES—Repair open in the wire between PCM connector terminal D14 and the output shaft (countershaft) speed sensor, then go to step 30.

NO—Check for loose or poor connections at PCM connector terminal D14. If the connection is OK, update the PCM if it does not have the latest software, or substitute a known-good PCM (see page 14-6), then recheck. If the symptom/indication goes away with a known-good PCM, replace the original PCM. ■

30. Clear the DTC with the HDS.
31. Test-drive the vehicle for several minutes in the D position in all five gears.
32. Check the OBD STATUS in DTCs MENU for a pass/fail test of code P0722.

Did the result indicate a pass?

YES—The problem has been corrected. ■

NO—Return to step 1 and recheck. ■

Protected by A

DTC P0723: Output Shaft (Countershaft) Speed Sensor (Intermittent Failure)

NOTE:
- Record all freeze data and review General Troubleshooting Information (see page 14-3) before you troubleshoot.
- This code is caused by an electrical circuit problem and cannot be caused by a mechanical problem in the transmission.

1. Record all freeze data, and clear the DTC with the HDS.

2. Test-drive the vehicle for 10 minutes under the same conditions as those indicated by the freeze data, and check the OBD STATUS in DTCs MENU for a pass/fail test of code P0723.

   Did the result indicate a fail?

   YES – Go to step 3.

   NO – Intermittent failure, the system is OK at this time. Check for poor connections or loose terminals at the output shaft (countershaft) speed sensor and PCM. If the tester indicates NOT COMPLETE, return to step 2 and recheck. ■

3. Turn the ignition switch OFF.

4. Disconnect the output shaft (countershaft) speed sensor connector, and inspect the connector and connector terminals to be sure they are making good contact.

   Are the connector terminals OK?

   YES – Go to step 5.

   NO – Repair the connector terminals, then go to step 5.

5. Connect the output shaft (countershaft) speed sensor connector.

6. Test-drive the vehicle for several minutes, and check the OBD STATUS in DTCs MENU for a pass/fail test of code P0723.

   Did the result indicate a fail?

   YES – Go to step 7.

   NO – The problem has been corrected. If the tester indicates NOT COMPLETE, return to step 6 and recheck. ■

7. Turn the ignition switch OFF.

8. Jump the SCS line with the HDS.

9. Disconnect PCM connector D (17P).

10. Disconnect the output shaft (countershaft) speed sensor connector.

11. Check for continuity between output shaft (countershaft) speed sensor connector terminal No. 2 and body ground.

OUTPUT SHAFT (COUNTERSHAFT) SPEED SENSOR CONNECTOR

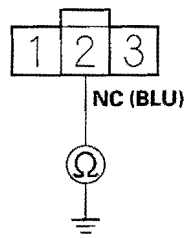

Wire side of female terminals

Is there continuity?

YES – Repair short to ground in the wire between PCM connector terminal D14 and the output shaft (countershaft) speed sensor, then go to step 18.

NO – Go to step 12.

(cont'd)

Protected by A R

DTC Troubleshooting (cont'd)

12. Connect PCM connector D (17P).
13. Turn the ignition switch ON (II).
14. Measure the voltage between output shaft (countershaft) speed sensor connector terminal No. 2 and body ground.

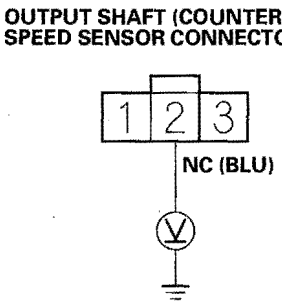

Wire side of female terminals

Is there about 5 V?

YES – Replace the output shaft (countershaft) speed sensor (see page 14-196), then go to step 18.

NO – Go to step 15.

15. Turn the ignition switch OFF.
16. Disconnect PCM connector D (17P).
17. Check for continuity between PCM connector terminal D14 and output shaft (countershaft) speed sensor connector terminal No. 2.

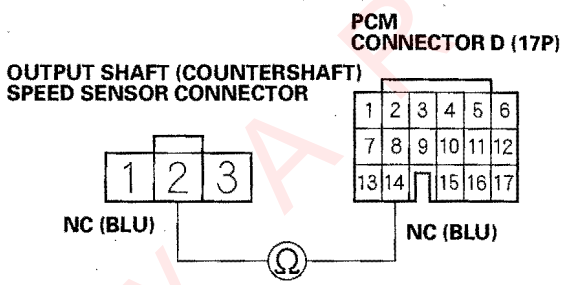

Wire side of female terminals

Is there coutituity?

YES – Update the PCM if it does not have the latest software, or substitute a known-good PCM (see page 14-6), then recheck. If the symptom/indication goes away with a known-good PCM, replace the original PCM. ■

NO – Repair open in the wire between PCM connector terminal D14 and the output shaft (countershaft) speed sensor, then go to step 18.

18. Clear the DTC with the HDS.
19. Test-drive the vehicle for several minutes in the D position in all five gears.
20. Check the OBD STATUS in DTCs MENU for a pass/fail test of code P0723.

Did the result indicate a pass?

YES – The problem has been corrected. ■

NO – Return to step 1 and recheck. ■

Protected by AP

DTC P0731: Problem in 1st Clutch and 1st Clutch Hydraulic Circuit

NOTE: Record all freeze data and review General Troubleshooting Information (see page 14-3) before you troubleshoot.

1. Warm up the engine to normal operating temperature (the radiator fan comes on).

2. Check to be sure that the transmission is filled to the proper level, and check for fluid leaks.

3. Drain the ATF (see step 3 on page 14-204) through a paint strainer. Look for contamination (small peaces of metal or friction material) in the strainer.

   NOTE: If little or no contamination is found in the strainer, the ATF is OK. Discoloration, small chips or flakes, metal fuzz and a slightly "burnt" smell is considered normal.

   Is the ATF OK?

   YES—Replace the ATF (see step 5 on page 14-204), then go to step 4.

   NO—Repair or replace the transmission.■

4. Measure the line pressure (see page 14-177).

   Is the line pressure within service limit?

   YES—Go to step 5.

   NO—Repair or replace the transmission.■

5. Clear the DTC with the HDS.

6. Test-drive the vehicle for several minutes under the same conditions as those indicated by the freeze data, or drive in 1st gear in the D position at speeds over 10 mph (16 km/h) for 20 seconds.

7. Turn the ignition switch OFF, then turn it ON (II) again.

8. Check the OBD STATUS in DTCs MENU for a pass/fail test of code P0731.

   Did the result indicate a fail?

   YES—Repair or replace the transmission.■

   NO—Intermittent failure, the system is OK at this time. If the tester indicates NOT COMPLETE, return to step 1 and recheck.■

Protected by A R

DTC Troubleshooting (cont'd)

DTC P0732: Problem in 2nd Clutch and 2nd Clutch Hydraulic Circuit

NOTE: Record all freeze data and review General Troubleshooting Information (see page 14-3) before you troubleshoot.

1. Warm up the engine to normal operating temperature (the radiator fan comes on).
2. Check to be sure that the transmission is filled to the proper level, and check for fluid leaks.
3. Drain the ATF (see step 3 on page 14-204) through a paint strainer. Look for contamination (small peaces of metal or friction material) in the strainer.

   NOTE: If little or no contamination is found in the strainer, the ATF is OK. Discoloration, small chips or flakes, metal fuzz and a slightly "burnt" smell is considered normal.

   Is the ATF OK?

   YES – Replace the ATF (see step 5 on page 14-204), then go to step 4.

   NO – Repair or replace the transmission. ■
4. Measure the line pressure (see page 14-177).

   Is the line pressure within service limit?

   YES – Go to step 5.

   NO – Repair or replace the transmission. ■
5. Measure 2nd clutch pressure (see page 14-177).

   Is 2nd clutch pressure within service limit?

   YES – Go to step 6.

   NO – Shift valves A, B, and C are stuck. Repair or replace the transmission. ■
6. Clear the DTC with the HDS.
7. Test-drive the vehicle for several minutes under the same conditions as those indicated by the freeze data, or drive in the 2nd gear in the D position at speeds over 10 mph (16 km/h) for 20 seconds.
8. Turn the ignition switch OFF, then turn it ON (II) again.
9. Check the OBD STATUS in DTCs MENU for a pass/fail test of code P0732.

   Did the result indicate a fail?

   YES – Repair the 2nd clutch, or replace the transmission. ■

   NO – Intermittent failure, the system is OK at this time. If the tester indicates NOT COMPLETE, return to step 1 and recheck. ■

Protected by AR

DTC P0733: Problem in 3rd Clutch and 3rd Clutch Hydraulic Circuit

NOTE: Record all freeze data and review General Troubleshooting Information (see page 14-3) before you troubleshoot.

1. Warm up the engine to normal operating temperature (the radiator fan comes on).
2. Check to be sure that the transmission is filled to the proper level, and check for fluid leaks.
3. Drain the ATF (see step 3 on page 14-204) through a paint strainer. Look for contamination (small peaces of metal or friction material) in the strainer.

   NOTE: If little or no contamination is found in the strainer, the ATF is OK. Discoloration, small chips or flakes, metal fuzz and a slightly "burnt" smell is considered normal.

   Is the ATF OK?

   YES—Replace the ATF (see step 5 on page 14-204), then go to step 4.

   NO—Repair or replace the transmission.■
4. Measure the line pressure (see page 14-177).

   Is the line pressure within service limit?

   YES—Go to step 5.

   NO—Repair the ATF pump and regulator valve, or replace the transmission.■
5. Measure 3rd clutch pressure (see page 14-177).

   Is 3rd clutch pressure within service limit?

   YES—Go to step 6.

   NO—Shift valves A, B, and C are stuck. Repair these shift valves and hydraulic circuit, or replace the transmission.■
6. Clear the DTC with the HDS.
7. Test-drive the vehicle for several minutes under the same conditions as those indicated by the freeze data, or drive in the 3rd gear in the D position at speeds over 10 mph (16 km/h) for 20 seconds.
8. Turn the ignition switch OFF, then turn it ON (II) again.
9. Check the OBD STATUS in DTCs MENU for a pass/fail test of code P0733.

   Did the result indicate a fail?

   YES—Repair the 3rd clutch, or replace the transmission.■

   NO—Intermittent failure, the system is OK at this time. If the tester indicates NOT COMPLETE, return to step 1 and recheck.■

Protected by AR

DTC Troubleshooting (cont'd)

DTC P0734: Problem in 4th Clutch and 4th Clutch Hydraulic Circuit

NOTE: Record all freeze data and review General Troubleshooting Information (see page 14-3) before you troubleshoot.

1. Warm up the engine to normal operating temperature (the radiator fan comes on).
2. Check to be sure that the transmission is filled to the proper level, and check for fluid leaks.
3. Drain the ATF (see step 3 on page 14-204) through a paint strainer. Look for contamination (small peaces of metal or friction material) in the strainer.

   NOTE: If little or no contamination is found in the strainer, the ATF is OK. Discoloration, small chips or flakes, metal fuzz and a slightly "burnt" smell is considered normal.

   Is the ATF OK?

   YES—Replace the ATF (see step 5 on page 14-204), then go to step 4.

   NO—Repair or replace the transmission.■
4. Measure the line pressure (see page 14-177).

   Is the line pressure within service limit?

   YES—Go to step 5.

   NO—Repair the ATF pump and regulator valve, or replace the transmission.■
5. Measure 4th clutch pressure (see page 14-177).

   Is 4th clutch pressure within service limit?

   YES—Go to step 6.

   NO—Shift valves A, B, C, and D are stuck. Repair these valves and hydraulic circuit, or replace the transmission.■
6. Clear the DTC with the HDS.
7. Test-drive the vehicle for several minutes under the same conditions as those indicated by the freeze data, or drive in the 4th gear in the D position at speeds over 10 mph (16 km/h) for 20 seconds.
8. Turn the ignition switch OFF, then turn it ON (II) again.
9. Check the OBD STATUS in DTCs MENU for a pass/fail test of code P0734.

   Did the result indicate a fail?

   YES—Repair the 4th clutch, or replace the transmission.■

   NO—Intermittent failure, the system is OK at this time. If the tester indicates NOT COMPLETE, return to step 1 and recheck.■

Protected by A R

DTC P0735: Problem in 5th Clutch and 5th Clutch Hydraulic Circuit

NOTE: Record all freeze data and review General Troubleshooting Information (see page 14-3) before you troubleshoot.

1. Warm up the engine to normal operating temperature (the radiator fan comes on).
2. Check to be sure that the transmission is filled to the proper level, and check for fluid leaks.
3. Drain the ATF (see step 3 on page 14-204) through a paint strainer. Look for contamination (small peaces of metal or friction material) in the strainer.

   NOTE: If little or no contamination is found in the strainer, the ATF is OK. Discoloration, small chips or flakes, metal fuzz and a slightly "burnt" smell is considered normal.

   Is the ATF OK?

   YES—Replace the ATF (see step 5 on page 14-204), then go to step 4.

   NO—Repair or replace the transmission. ■
4. Measure the line pressure (see page 14-177).

   Is the line pressure within service limit?

   YES—Go to step 5.

   NO—Repair the ATF pump and regulator valve, or replace the transmission. ■
5. Measure 5th clutch pressure (see page 14-177).

   Is 5th clutch pressure within service limit?

   YES—Go to step 6.

   NO—Shift valves A, B, and C are stuck. Repair or replace the transmission. ■
6. Clear the DTC with the HDS.
7. Test-drive the vehicle for several minutes under the same conditions as those indicated by the freeze data, or drive in the 5th gear in the D position at speeds over 10 mph (16 km/h) for 20 seconds.
8. Turn the ignition switch OFF, then turn it ON (II) again.
9. Check the OBD STATUS in DTCs MENU for a pass/fail test of code P0735.

   Did the result indicate a fail?

   YES—Repair or replace the transmission. ■

   NO—Intermittent failure, the system is OK at this time. If the tester indicates NOT COMPLETE, return to step 1 and recheck. ■

Protected by ARR

DTC Troubleshooting (cont'd)

DTC P0741: Torque Converter Clutch Circuit Stuck OFF

NOTE: Record all freeze data and review General Troubleshooting Information (see page 14-3) before you troubleshoot.

1. Warm up the engine to normal operating temperature (the radiator fan comes on).
2. Check to be sure that the transmission is filled to the proper level, and check for fluid leaks.
3. Drain the ATF (see step 3 on page 14-204) through a paint strainer. Look for contamination (small peaces of metal or friction material) in the strainer.

   NOTE: If little or no contamination is found in the strainer, the ATF is OK. Discoloration, small chips or flakes, metal fuzz and a slightly "burnt" smell is considered normal.

   Is the ATF OK?

   YES—Replace the ATF (see step 5 on page 14-204), then go to step 4.

   NO—Repair or replace the transmission. ■
4. Clear the DTC with the HDS.
5. Select LOCKUP SOL TEST in MISCELLANEOUS TEST MENU, then carry out A/T LOCKUP SOL A test in LOCKUP SOL TEST MENU with the HDS.

   Is a clicking sound heard?

   YES—Go to step 6.

   NO—Replace torque converter clutch solenoid valve (see page 14-187), then go to step 10.
6. Select LINEAR SOL TEST in MISCELLANEOUS TEST MENU, then carry out LINEAR SOL C TEST in LINEAR SOL TEST MENU.

   Is the system OK?

   YES—Go to step 7.

   NO—Follow instructions indicated on the HDS by the tester result. Go to step 10 if any part was replaced.
7. Run the engine until the engine coolant temperature reaches 176°F (80°C).
8. Test-drive the vehicle at 55 mph (88 km/h) for 2 minutes while monitoring the vehicle speed with the HDS.
9. Check the OBD STATUS in DTCs MENU for a pass/fail test of code P0741.

   Did the result indicate a fail?

   YES—Repair or replace the transmission. ■

   NO—Intermittent failure, the system is OK at this time. If the tester indicates NOT COMPLETE, return to step 8 and recheck. ■
10. Clear the DTC with the HDS.
11. Test-drive the vehicle for several minutes under the same conditions as those indicated by the freeze data.
12. Check the OBD STATUS in DTCs MENU for a pass/fail test of code P0741.

    Did the result indicate a pass?

    YES—The problem has been corrected. ■

    NO—Return to step 1 and recheck. ■

Protected by A.R.

DTC P0746: A/T Clutch Pressure Control Solenoid Valve A Stuck OFF

NOTE: Record all freeze data and review General Troubleshooting Information (see page 14-3) before you troubleshoot.

1. Warm up the engine to normal operating temperature (the radiator fan comes on).

2. Check to be sure that the transmission is filled to the proper level, and check for fluid leaks.

3. Drain the ATF (see step 3 on page 14-204) through a paint strainer. Look for contamination (small peaces of metal or friction material) in the strainer.

   NOTE: If little or no contamination is found in the strainer, the ATF is OK. Discoloration, small chips or flakes, metal fuzz and a slightly "burnt" smell is considered normal.

   Is the ATF OK?

   YES—Replace the ATF (see step 5 on page 14-204), then go to step 4.

   NO—Repair or replace the transmission.■

4. Clear the DTC with the HDS.

5. Test-drive the vehicle in the D position in all five gears at speeds over 12 mph (20 km/h) for more than 20 seconds, then slow down to a stop.

6. Retest-drive the vehicle in the D position in all five gears at speeds over 12 mph (20 km/h) for more than 20 seconds, then slow down to a stop.

7. Check the OBD STATUS in DTCs MENU for a pass/ fail test of code P0746.

   Did the result indicate a fail?

   YES—Go to step 8.

   NO—Intermittent failure, the system is OK at this time. If the tester indicates NOT COMPLETE, return to step 5 and recheck.■

8. Clear the DTC with the HDS.

9. Select LINEAR SOL TEST in MISCELLANEOUS TEST MENU, then carry out LINEAR SOL A TEST in LINEAR SOL TEST MENU with the HDS.

   Is the system OK?

   YES—Intermittent failure, the system is OK at this time.■

   NO—Follow instructions indicated on the HDS by the tester result. Go to step 10 if any part was replaced.

10. Clear the DTC with the HDS.

11. Test-drive the vehicle in the D position in all five gears at speeds over 12 mph (20 km/h) for more than 20 seconds, then slow down to a stop.

12. Retest-drive the vehicle in the D position in all five gears at speeds over 12 mph (20 km/h) for more than 20 seconds, then slow down to a stop.

13. Check the OBD STATUS in DTCs MENU for a pass/ fail test of code P0746.

    Did the result indicate a pass?

    YES—The problem has been corrected.■

    NO—Return to step 1 and recheck.■

Protected by APR

DTC Troubleshooting (cont'd)

DTC P0747: A/T Clutch Pressure Control Solenoid Valve A Stuck ON

NOTE: Record all freeze data and review General Troubleshooting Information (see page 14-3) before you troubleshoot.

1. Warm up the engine to normal operating temperature (the radiator fan comes on).
2. Check to be sure that the transmission is filled to the proper level, and check for fluid leaks.
3. Drain the ATF (see step 3 on page 14-204) through a paint strainer. Look for contamination (small peaces of metal or friction material) in the strainer.

   NOTE: If little or no contamination is found in the strainer, the ATF is OK. Discoloration, small chips or flakes, metal fuzz and a slightly "burnt" smell is considered normal.

   Is the ATF OK?

   YES—Replace the ATF (see step 5 on page 14-204), then go to step 4.

   NO—Repair or replace the transmission. ■
4. Clear the DTC with the HDS.
5. Test-drive the vehicle in the D position in all five gears at speeds over 12 mph (20 km/h) for more than 20 seconds, then slow down to a stop.
6. Retest-drive the vehicle in the D position in all five gears at speeds over 12 mph (20 km/h) for more than 20 seconds, then slow down to a stop.
7. Check the OBD STATUS in DTCs MENU for a pass/fail test of code P0747.

   Did the result indicate a fail?

   YES—Go to step 8.

   NO—Intermittent failure, the system is OK at this time. If the tester indicates NOT COMPLETE, return to step 5 and recheck. ■
8. Clear the DTC with the HDS.
9. Select LINEAR SOL TEST in MISCELLANEOUS TEST MENU, then carry out LINEAR SOL A TEST in LINEAR SOL TEST MENU with the HDS.

   Is the system OK?

   YES—Go to step 10.

   NO—Follow instructions indicated on the HDS by the tester result. Go to step 13 if any part was replaced.
10. Test-drive the vehicle in the D position in all five gears at speeds over 12 mph (20 km/h) for more than 20 seconds, then slow down to a stop.
11. Retest-drive the vehicle in the D position in all five gears at speeds over 12 mph (20 km/h) for more than 20 seconds, then slow down to a stop.
12. Check the OBD STATUS in DTCs MENU for a pass/fail test of code P0747.

    Did the result indicate a fail?

    YES—Replace A/T clutch pressure control solenoid valve A (see page 14-191), then go to step 13.

    NO—Intermittent failure, the system is OK at this time. If the tester indicates NOT COMPLETE, return to step 10 and recheck. ■
13. Clear the DTC with the HDS.
14. Test-drive the vehicle in the D position in all five gears at speeds over 12 mph (20 km/h) for more than 20 seconds, then slow down to a stop.
15. Retest-drive the vehicle in the D position in all five gears at speeds over 12 mph (20 km/h) for more than 20 seconds, then slow down to a stop.
16. Check the OBD STATUS in DTCs MENU for a pass/fail test of code P0747.

    Did the result indicate a pass?

    YES—The problem has been corrected. ■

    NO—Return to step 1 and recheck. ■

Protected by AR

DTC P0751: Shift Solenoid Valve A Stuck OFF

NOTE: Record all freeze data and review General Troubleshooting Information (see page 14-3) before you troubleshoot.

1. Warm up the engine to normal operating temperature (the radiator fan comes on).

2. Check to be sure that the transmission is filled to the proper level, and check for fluid leaks.

3. Drain the ATF (see step 3 on page 14-204) through a paint strainer. Look for contamination (small peaces of metal or friction material) in the strainer.

   NOTE: If little or no contamination is found in the strainer, the ATF is OK. Discoloration, small chips or flakes, metal fuzz and a slightly "burnt" smell is considered normal.

   Is the ATF OK?

   YES—Replace the ATF (see step 5 on page 14-204), then go to step 4.

   NO—Repair or replace the transmission. ■

4. Clear the DTC with the HDS.

5. Test-drive the vehicle in the D position in all five gears at speeds over 12 mph (20 km/h) for more than 20 seconds, then slow down to a stop.

6. Retest-drive the vehicle in the D position in all five gears at speeds over 12 mph (20 km/h) for more than 20 seconds, then slow down to a stop.

7. Check the OBD STATUS in DTCs MENU for a pass/fail test of code P0751.

   Did the result indicate a fail?

   YES—Go to step 8.

   NO—Intermittent failure, the system is OK at this time. If the tester indicates NOT COMPLETE, return to step 5 and recheck. ■

8. Clear the DTC with the HDS.

9. Select SHIFT SOL TEST in MISCELLANEOUS TEST MENU, then carry out A/T SHIFT SOL A test in SHIFT SOL TEST MENU with the HDS.

   Is a clicking sound heard?

   YES—Go to step 10.

   NO—Replace shift solenoid valve A (see page 14-181), then go to step 13.

10. Test-drive the vehicle in the D position in all five gears at speeds over 12 mph (20 km/h) for more than 20 seconds, then slow down to a stop.

11. Retest-drive the vehicle in the D position in all five gears at speeds over 12 mph (20 km/h) for more than 20 seconds, then slow down to a stop.

12. Check the OBD STATUS in DTCs MENU for a pass/fail test of code P0751.

    Did the result indicate a fail?

    YES—Repair shift valves A and E, or replace the transmission, then go to step 13.

    NO—Intermittent failure, the system is OK at this time. If the tester indicates NOT COMPLETE, return to step 10 and recheck. ■

13. Clear the DTC with the HDS.

14. Test-drive the vehicle in the D position in all five gears at speeds over 12 mph (20 km/h) for more than 20 seconds, then slow down to a stop.

15. Retest-drive the vehicle in the D position in all five gears at speeds over 12 mph (20 km/h) for more than 20 seconds, then slow down to a stop.

16. Check the OBD STATUS in DTCs MENU for a pass/fail test of code P0751.

    Did the result indicate a pass?

    YES—The problem has been corrected. ■

    NO—Return to step 1 and recheck. ■

Protected by S.A.R

DTC Troubleshooting (cont'd)

DTC P0752: Shift Solenoid Valve A Stuck ON

NOTE: Record all freeze data and review General Troubleshooting Information (see page 14-3) before you troubleshoot.

1. Warm up the engine to normal operating temperature (the radiator fan comes on).
2. Check to be sure that the transmission is filled to the proper level, and check for fluid leaks.
3. Drain the ATF (see step 3 on page 14-204) through a paint strainer. Look for contamination (small peaces of metal or friction material) in the strainer.

   NOTE: If little or no contamination is found in the strainer, the ATF is OK. Discoloration, small chips or flakes, metal fuzz and a slightly "burnt" smell is considered normal.

   Is the ATF OK?

   YES—Replace the ATF (see step 5 on page 14-204), then go to step 4.

   NO—Repair or replace the transmission.■
4. Clear the DTC with the HDS.
5. Test-drive the vehicle in the D position in all five gears at speeds over 12 mph (20 km/h) for more than 20 seconds, then slow down to a stop.
6. Retest-drive the vehicle in the D position in all five gears at speeds over 12 mph (20 km/h) for more than 20 seconds, then slow down to a stop.
7. Check the OBD STATUS in DTCs MENU for a pass/fail test of code P0752.

   Did the result indicate a fail?

   YES—Go to step 8.

   NO—Intermittent failure, the system is OK at this time. If the tester indicates NOT COMPLETE, return to step 5 and recheck.■
8. Clear the DTC with the HDS.
9. Select SHIFT SOL TEST in MISCELLANEOUS TEST MENU, then carry out A/T SHIFT SOL A test in SHIFT SOL TEST MENU with the HDS.

   Is a clicking sound heard?

   YES—Go to step 10.

   NO—Replace shift solenoid valve A (see page 14-181), then go to step 13.
10. Test-drive the vehicle in the D position in all five gears at speeds over 12 mph (20 km/h) for more than 20 seconds, then slow down to a stop.
11. Retest-drive the vehicle in the D position in all five gears at speeds over 12 mph (20 km/h) for more than 20 seconds, then slow down to a stop.
12. Check the OBD STATUS in DTCs MENU for a pass/fail test of code P0752.

    Did the result indicate a fail?

    YES—Repair shift valves A and E, or replace the transmission, then go to step 13.

    NO—Intermittent failure, the system is OK at this time. If the tester indicates NOT COMPLETE, return to step 10 and recheck.■
13. Clear the DTC with the HDS.
14. Test-drive the vehicle in the D position in all five gears at speeds over 12 mph (20 km/h) for more than 20 seconds, then slow down to a stop.
15. Retest-drive the vehicle in the D position in all five gears at speeds over 12 mph (20 km/h) for more than 20 seconds, then slow down to a stop.
16. Check the OBD STATUS in DTCs MENU for a pass/fail test of code P0752.

    Did the result indicate a pass?

    YES—The problem has been corrected.■

    NO—Return to step 1 and recheck.■

Protected by A.R

DTC P0756: Shift Solenoid Valve B Stuck OFF

NOTE: Record all freeze data and review General Troubleshooting Information (see page 14-3) before you troubleshoot.

1. Warm up the engine to normal operating temperature (the radiator fan comes on).
2. Check to be sure that the transmission is filled to the proper level, and check for fluid leaks.
3. Drain the ATF (see step 3 on page 14-204) through a paint strainer. Look for contamination (small peaces of metal or friction material) in the strainer.

   NOTE: If little or no contamination is found in the strainer, the ATF is OK. Discoloration, small chips or flakes, metal fuzz and a slightly "burnt" smell is considered normal.

   Is the ATF OK?

   YES—Replace the ATF (see step 5 on page 14-204), then go to step 4.

   NO—Repair or replace the transmission. ■
4. Clear the DTC with the HDS.
5. Test-drive the vehicle in the D position in all five gears at speeds over 12 mph (20 km/h) for more than 20 seconds, then slow down to a stop.
6. Retest-drive the vehicle in the D position in all five gears at speeds over 12 mph (20 km/h) for more than 20 seconds, then slow down to a stop.
7. Check the OBD STATUS in DTCs MENU for a pass/fail test of code P0756.

   Did the result indicate a fail?

   YES—Go to step 8.

   NO—Intermittent failure, the system is OK at this time. If the tester indicates NOT COMPLETE, return to step 5 and recheck. ■
8. Clear the DTC with the HDS.
9. Select SHIFT SOL TEST in MISCELLANEOUS TEST MENU, then carry out A/T SHIFT SOL B test in SHIFT SOL TEST MENU with the HDS.

   Is a clicking sound heard?

   YES—Go to step 10.

   NO—Replace shift solenoid valve B (see page 14-183), then go to step 13.
10. Test-drive the vehicle in the D position in all five gears at speeds over 12 mph (20 km/h) for more than 20 seconds, then slow down to a stop.
11. Retest-drive the vehicle in the D position in all five gears at speeds over 12 mph (20 km/h) for more than 20 seconds, then slow down to a stop.
12. Check the OBD STATUS in DTCs MENU for a pass/fail test of code P0756.

    Did the result indicate a fail?

    YES—Repair shift valve B, or replace the transmission, then go to step 13.

    NO—Intermittent failure, the system is OK at this time. If the tester indicates NOT COMPLETE, return to step 10 and recheck. ■
13. Clear the DTC with the HDS.
14. Test-drive the vehicle in the D position in all five gears at speeds over 12 mph (20 km/h) for more than 20 seconds, then slow down to a stop.
15. Retest-drive the vehicle in the D position in all five gears at speeds over 12 mph (20 km/h) for more than 20 seconds, then slow down to a stop.
16. Check the OBD STATUS in DTCs MENU for a pass/fail test of code P0756.

    Did the result indicate a pass?

    YES—The problem has been corrected. ■

    NO—Return to step 1 and recheck. ■

Protected by ...

DTC Troubleshooting (cont'd)

DTC P0757: Shift Solenoid Valve B Stuck ON

NOTE: Record all freeze data and review General Troubleshooting Information (see page 14-3) before you troubleshoot.

1. Warm up the engine to normal operating temperature (the radiator fan comes on).
2. Check to be sure that the transmission is filled to the proper level, and check for fluid leaks.
3. Drain the ATF (see step 3 on page 14-204) through a paint strainer. Look for contamination (small peaces of metal or friction material) in the strainer.

   NOTE: If little or no contamination is found in the strainer, the ATF is OK. Discoloration, small chips or flakes, metal fuzz and a slightly "burnt" smell is considered normal.

   Is the ATF OK?

   YES—Replace the ATF (see step 5 on page 14-204), then go to step 4.

   NO—Repair or replace the transmission. ■
4. Clear the DTC with the HDS.
5. Test-drive the vehicle in the D position in all five gears at speeds over 12 mph (20 km/h) for more than 20 seconds, then slow down to a stop.
6. Retest-drive the vehicle in the D position in all five gears at speeds over 12 mph (20 km/h) for more than 20 seconds, then slow down to a stop.
7. Check the OBD STATUS in DTCs MENU for a pass/fail test of code P0757.

   Did the result indicate a fail?

   YES—Go to step 8.

   NO—Intermittent failure, the system is OK at this time. If the tester indicates NOT COMPLETE, return to step 5 and recheck. ■
8. Clear the DTC with the HDS.
9. Select SHIFT SOL TEST in MISCELLANEOUS TEST MENU, then carry out A/T SHIFT SOL B test in SHIFT SOL TEST MENU with the HDS.

   Is a clicking sound heard?

   YES—Go to step 10.

   NO—Replace shift solenoid valve B (see page 14-183), then go to step 13.
10. Test-drive the vehicle in the D position in all five gears at speeds over 12 mph (20 km/h) for more than 20 seconds, then slow down to a stop.
11. Retest-drive the vehicle in the D position in all five gears at speeds over 12 mph (20 km/h) for more than 20 seconds, then slow down to a stop.
12. Check the OBD STATUS in DTCs MENU for a pass/fail test of code P0757.

    Did the result indicate a fail?

    YES—Repair shift valve B, or replace the transmission, then go to step 13.

    NO—Intermittent failure, the system is OK at this time. If the tester indicates NOT COMPLETE, return to step 10 and recheck. ■
13. Clear the DTC with the HDS.
14. Test-drive the vehicle in the D position in all five gears at speeds over 12 mph (20 km/h) for more than 20 seconds, then slow down to a stop.
15. Retest-drive the vehicle in the D position in all five gears at speeds over 12 mph (20 km/h) for more than 20 seconds, then slow down to a stop.
16. Check the OBD STATUS in DTCs MENU for a pass/fail test of code P0757.

    Did the result indicate a pass?

    YES—The problem has been corrected. ■

    NO—Return to step 1 and recheck. ■

Protected by A P

DTC P0761: Shift Solenoid Valve C Stuck OFF

NOTE: Record all freeze data and review General Troubleshooting Information (see page 14-3) before you troubleshoot.

1. Warm up the engine to normal operating temperature (the radiator fan comes on).
2. Check to be sure that the transmission is filled to the proper level, and check for fluid leaks.
3. Drain the ATF (see step 3 on page 14-204) through a paint strainer. Look for contamination (small peaces of metal or friction material) in the strainer.

   NOTE: If little or no contamination is found in the strainer, the ATF is OK. Discoloration, small chips or flakes, metal fuzz and a slightly "burnt" smell is considered normal.

   Is the ATF OK?

   YES—Replace the ATF (see step 5 on page 14-204), then go to step 4.

   NO—Repair or replace the transmission. ■
4. Clear the DTC with the HDS.
5. Test-drive the vehicle in the D position in all five gears at speeds over 12 mph (20 km/h) for more than 20 seconds, then slow down to a stop.
6. Retest-drive the vehicle in the D position in all five gears at speeds over 12 mph (20 km/h) for more than 20 seconds, then slow down to a stop.
7. Check the OBD STATUS in DTCs MENU for a pass/fail test of code P0761.

   Did the result indicate a fail?

   YES—Go to step 8.

   NO—Intermittent failure, the system is OK at this time. If the tester indicates NOT COMPLETE, return to step 5 and recheck. ■
8. Clear the DTC with the HDS.
9. Select SHIFT SOL TEST in MISCELLANEOUS TEST MENU, then carry out A/T SHIFT SOL C test in SHIFT SOL TEST MENU with the HDS.

   Is a clicking sound heard?

   YES—Go to step 10.

   NO—Replace shift solenoid valve C (see page 14-185), then go to step 13.
10. Test-drive the vehicle in the D position in all five gears at speeds over 12 mph (20 km/h) for more than 20 seconds, then slow down to a stop.
11. Retest-drive the vehicle in the D position in all five gears at speeds over 12 mph (20 km/h) for more than 20 seconds, then slow down to a stop.
12. Check the OBD STATUS in DTCs MENU for a pass/fail test of code P0761.

    Did the result indicate a fail?

    YES—Repair shift valves C and E, or replace the transmission, then go to step 13.

    NO—Intermittent failure, the system is OK at this time. If the tester indicates NOT COMPLETE, return to step 10 and recheck. ■
13. Clear the DTC with the HDS.
14. Test-drive the vehicle in the D position in all five gears at speeds over 12 mph (20 km/h) for more than 20 seconds, then slow down to a stop.
15. Retest-drive the vehicle in the D position in all five gears at speeds over 12 mph (20 km/h) for more than 20 seconds, then slow down to a stop.
16. Check the OBD STATUS in DTCs MENU for a pass/fail test of code P0761.

    Did the result indicate a pass?

    YES—The problem has been corrected. ■

    NO—Return to step 1 and recheck. ■

Protected by A-R

DTC Troubleshooting (cont'd)

DTC P0762: Shift Solenoid Valve C Stuck ON

NOTE: Record all freeze data and review General Troubleshooting Information (see page 14-3) before you troubleshoot.

1. Warm up the engine to normal operating temperature (the radiator fan comes on).
2. Check to be sure that the transmission is filled to the proper level, and check for fluid leaks.
3. Drain the ATF (see step 3 on page 14-204) through a paint strainer. Look for contamination (small peaces of metal or friction material) in the strainer.

   NOTE: If little or no contamination is found in the strainer, the ATF is OK. Discoloration, small chips or flakes, metal fuzz and a slightly "burnt" smell is considered normal.

   Is the ATF OK?

   YES—Replace the ATF (see step 5 on page 14-204), then go to step 4.

   NO—Repair or replace the transmission. ■
4. Clear the DTC with the HDS.
5. Test-drive the vehicle in the D position in all five gears at speeds over 12 mph (20 km/h) for more than 20 seconds, then slow down to a stop.
6. Retest-drive the vehicle in the D position in all five gears at speeds over 12 mph (20 km/h) for more than 20 seconds, then slow down to a stop.
7. Check the OBD STATUS in DTCs MENU for a pass/fail test of code P0762.

   Did the result indicate a fail?

   YES—Go to step 8.

   NO—Intermittent failure, the system is OK at this time. If the tester indicates NOT COMPLETE, return to step 5 and recheck. ■
8. Clear the DTC with the HDS.
9. Select SHIFT SOL TEST in MISCELLANEOUS TEST MENU, then carry out A/T SHIFT SOL C test in SHIFT SOL TEST MENU with the HDS.

   Is a clicking sound heard?

   YES—Go to step 10.

   NO—Replace shift solenoid valve C (see page 14-185), then go to step 13.
10. Test-drive the vehicle in the D position in all five gears at speeds over 12 mph (20 km/h) for more than 20 seconds, then slow down to a stop.
11. Retest-drive the vehicle in the D position in all five gears at speeds over 12 mph (20 km/h) for more than 20 seconds, then slow down to a stop.
12. Check the OBD STATUS in DTCs MENU for a pass/fail test of code P0762.

    Did the result indicate a fail?

    YES—Repair shift valves C and E, or replace the transmission, then go to step 13.

    NO—Intermittent failure, the system is OK at this time. If the tester indicates NOT COMPLETE, return to step 10 and recheck. ■
13. Clear the DTC with the HDS.
14. Test-drive the vehicle in the D position in all five gears at speeds over 12 mph (20 km/h) for more than 20 seconds, then slow down to a stop.
15. Retest-drive the vehicle in the D position in all five gears at speeds over 12 mph (20 km/h) for more than 20 seconds, then slow down to a stop.
16. Check the OBD STATUS in DTCs MENU for a pass/fail test of code P0762.

    Did the result indicate a pass?

    YES—The problem has been corrected. ■

    NO—Return to step 1 and recheck. ■

Protected by CARFAX

DTC P0776: A/T Clutch Pressure Control Solenoid Valve B Stuck OFF

NOTE: Record all freeze data and review General Troubleshooting Information (see page 14-3) before you troubleshoot.

1. Warm up the engine to normal operating temperature (the radiator fan comes on).
2. Check to be sure that the transmission is filled to the proper level, and check for fluid leaks.
3. Drain the ATF (see step 3 on page 14-204) through a paint strainer. Look for contamination (small peaces of metal or friction material) in the strainer.

   NOTE: If little or no contamination is found in the strainer, the ATF is OK. Discoloration, small chips or flakes, metal fuzz and a slightly "burnt" smell is considered normal.

   Is the ATF OK?

   YES—Replace the ATF (see step 5 on page 14-204), then go to step 4.

   NO—Repair or replace the transmission.■
4. Clear the DTC with the HDS.
5. Test-drive the vehicle in the D position in all five gears at speeds over 12 mph (20 km/h) for more than 20 seconds, then slow down to a stop.
6. Retest-drive the vehicle in the D position in all five gears at speeds over 12 mph (20 km/h) for more than 20 seconds, then slow down to a stop.
7. Check the OBD STATUS in DTCs MENU for a pass/fail test of code P0776.

   Did the result indicate a fail?

   YES—Go to step 8.

   NO—Intermittent failure, the system is OK at this time. If the tester indicates NOT COMPLETE, return to step 5 and recheck.■
8. Clear the DTC with the HDS.
9. Select LINEAR SOL TEST in MISCELLANEOUS TEST MENU, then carry out LINEAR SOL B TEST in LINEAR SOL TEST MENU with the HDS.

   Is the system OK?

   YES—Intermittent failure, the system is OK at this time.■

   NO—Follow instructions indicated on the HDS by the tester result. Go to step 10 if any part was replaced.
10. Clear the DTC with the HDS.
11. Test-drive the vehicle in the D position in all five gears at speeds over 12 mph (20 km/h) for more than 20 seconds, then slow down to a stop.
12. Retest-drive the vehicle in the D position in all five gears at speeds over 12 mph (20 km/h) for more than 20 seconds, then slow down to a stop.
13. Check the OBD STATUS in DTCs MENU for a pass/fail test of code P0776.

    Did the result indicate a pass?

    YES—The problem has been corrected.■

    NO—Return to step 1 and recheck.■

Protected by A R

DTC Troubleshooting (cont'd)

DTC P0777: A/T Clutch Pressure Control Solenoid Valve B Stuck ON

NOTE: Record all freeze data and review General Troubleshooting Information (see page 14-3) before you troubleshoot.

1. Warm up the engine to normal operating temperature (the radiator fan comes on).
2. Check to be sure that the transmission is filled to the proper level, and check for fluid leaks.
3. Drain the ATF (see step 3 on page 14-204) through a paint strainer. Look for contamination (small peaces of metal or friction material) in the strainer.

   NOTE: If little or no contamination is found in the strainer, the ATF is OK. Discoloration, small chips or flakes, metal fuzz and a slightly "burnt" smell is considered normal.

   Is the ATF OK?

   YES—Replace the ATF (see step 5 on page 14-204), then go to step 4.

   NO—Repair or replace the transmission.■
4. Clear the DTC with the HDS.
5. Test-drive the vehicle in the D position in all five gears at speeds over 12 mph (20 km/h) for more than 20 seconds, then slow down to a stop.
6. Retest-drive the vehicle in the D position in all five gears at speeds over 12 mph (20 km/h) for more than 20 seconds, then slow down to a stop.
7. Check the OBD STATUS in DTCs MENU for a pass/fail test of code P0777.

   Did the result indicate a fail?

   YES—Go to step 8.

   NO—Intermittent failure, the system is OK at this time. If the tester indicates NOT COMPLETE, return to step 5 and recheck.■
8. Clear the DTC with the HDS.
9. Select LINEAR SOL TEST in MISCELLANEOUS TEST MENU, then carry out LINEAR SOL B TEST in LINEAR SOL TEST MENU with the HDS.

   Is the system OK?

   YES—Intermittent failure, the system is OK at this time.■

   NO—Follow instructions indicated on the HDS by the tester result. Go to step 10 if any part was replaced.
10. Clear the DTC with the HDS.
11. Test-drive the vehicle in the D position in all five gears at speeds over 12 mph (20 km/h) for more than 20 seconds, then slow down to a stop.
12. Retest-drive the vehicle in the D position in all five gears at speeds over 12 mph (20 km/h) for more than 20 seconds, then slow down to a stop.
13. Check the OBD STATUS in DTCs MENU for a pass/fail test of code P0777.

    Did the result indicate a pass?

    YES—The problem has been corrected.■

    NO—Return to step 1 and recheck.■

Protected by AR

DTC P0780: Problem in Shift Control System

NOTE: Record all freeze data and review General Troubleshooting Information (see page 14-3) before you troubleshoot.

1. Warm up the engine to normal operating temperature (the radiator fan comes on).
2. Check to be sure that the transmission is filled to the proper level, and check for fluid leaks.
3. Drain the ATF (see step 3 on page 14-204) through a paint strainer. Look for contamination (small peaces of metal or friction material) in the strainer.

   NOTE: If little or no contamination is found in the strainer, the ATF is OK. Discoloration, small chips or flakes, metal fuzz and a slightly "burnt" smell is considered normal.

   Is the ATF OK?

   YES—Replace the ATF (see step 5 on page 14-204), then go to step 4.

   NO—Repair or replace the transmission.■
4. Clear the DTC with the HDS.
5. Test-drive the vehicle in the D position in all five gears at speeds over 12 mph (20 km/h) for more than 20 seconds, then slow down to a stop.
6. Retest-drive the vehicle in the D position in all five gears at speeds over 12 mph (20 km/h) for more than 20 seconds, then slow down to a stop.
7. Check the OBD STATUS in DTCs MENU for a pass/fail test of code P0780.

   Did the result indicate a fail?

   YES—Go to step 8.

   NO—Intermittent failure, the system is OK at this time. If the tester indicates NOT COMPLETE, return to step 5 and recheck.■
8. Clear the DTC with the HDS.
9. Run the engine until the engine coolant temperature reaches 176°F (80°C).
10. Test-drive the vehicle in the D position in all five gears at speeds over 12 mph (20 km/h) for more than 20 seconds, then slow down to a stop.
11. Retest-drive the vehicle in the D position in all five gears at speeds over 12 mph (20 km/h) for more than 20 seconds, then slow down to a stop.
12. Check the OBD STATUS in DTCs MENU for a pass/fail test of code P0780.

    Did the result indicate a fail?

    YES—Repair shift valve D, or replace the transmission, then go to step 13.

    NO—Intermittent failure, the system is OK at this time. If the tester indicates NOT COMPLETE, return to step 1 and recheck.■
13. Clear the DTC with the HDS.
14. Test-drive the vehicle in the D position in all five gears at speeds over 12 mph (20 km/h) for more than 20 seconds, then slow down to a stop.
15. Check the OBD STATUS in DTCs MENU for a pass/fail test of code P0780.

    Did the result indicate a pass?

    YES—The problem has been corrected.■

    NO—Return to step 1 and recheck.■

Protected by AP

DTC Troubleshooting (cont'd)

DTC P0815: Short in Transmission Gear Selection Switch Upshift Switch Circuit, or Transmission Gear Selection Switch Upshift Switch Stuck ON

NOTE:
- Record all freeze data and review General Troubleshooting Information (see page 14-3) before you troubleshoot.
- This code is caused by an electrical circuit problem and cannot be caused by a mechanical problem in the transmission.

1. Turn the ignition switch ON (II).
2. Shift to the P position.
3. Verify the transmission gear selection switch upshift switch inputs with the HDS in the A/T data list.

   Is UPSHIFT SW ON?

   YES—Go to step 4.

   NO—Intermittent failure, the system is OK at this time. Check the BRN/WHT wire for an intermittent short to ground between the transmission gear selection switch and PCM.■
4. Turn the ignition switch OFF.
5. Disconnect the transmission gear selection switch connector.
6. Turn the ignition switch ON (II).
7. Verify the transmission gear selection switch upshift switch inputs with the HDS in the A/T data list.

   Is UPSHIFT SW ON?

   YES—Go to step 8.

   NO—Replace the transmission gear selection switch (see page 14-202), then go to step 12.
8. Turn the ignition switch OFF.
9. Jump the SCS line with the HDS.
10. Disconnect PCM connector A (31P).
11. Check for continuity between transmission gear selection switch connector terminal No. 7 and body ground.

TRANSMISSION GEAR SELECTION SWITCH/ PARK PIN SWITCH CONNECTOR

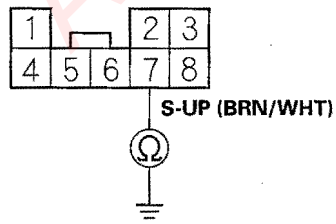

Wire side of female terminals

Is there continuity?

YES—Repair short to ground in the wire between PCM connector terminal A19 and the transmission gear selection switch connector, then go to step 12.

NO—Check for loose or poor connections at PCM connector terminal A19. If the connection is OK, update the PCM if it does not have the latest software, or substitute a known-good PCM (see page 14-6), then recheck. If the symptom/indication goes away with a known-good PCM, replace the original PCM.■

Protected by AR

12. Clear the DTC with the HDS.

13. Start the engine in the P position, wait for more than 10 seconds, then shift to the M position.

14. Push the shift lever toward shiftup position (+) slowly, and return to neutral position; repeat this test 10 times or more.

15. Pull the shift lever toward shiftdown position (−) slowly, and return to neutral position; repeat this test 10 times or more.

16. Check the OBD STATUS in DTCs MENU for a pass/fail test of code P0815.

    Did the result indicate a pass?

    YES—The problem has been corrected. ■

    NO—Return to step 1 and recheck. ■

Protected by A R

DTC Troubleshooting (cont'd)

DTC P0816: Short in Transmission Gear Selection Switch Downshift Switch Circuit, or Transmission Gear Selection Switch Downshift Switch Stuck ON

NOTE:
- Record all freeze data and review General Troubleshooting Information (see page 14-3) before you troubleshoot.
- This code is caused by an electrical circuit problem and cannot be caused by a mechanical problem in the transmission.

1. Turn the ignition switch ON (II).
2. Shift to the P position.
3. Verify the transmission gear selection switch downshift switch inputs with the HDS in the A/T data list.

   Is DOWNSHIFT SW ON?

   YES—Go to step 4.

   NO—Intermittent failure, the system is OK at this time. Check the WHT/BLU wire for an intermittent short to ground between the transmission gear selection switch and PCM.■
4. Turn the ignition switch OFF.
5. Disconnect the transmission gear selection switch connector.
6. Turn the ignition switch ON (II).
7. Verify the transmission gear selection switch downshift switch inputs with the HDS in the A/T data list.

   Is DOWNSHIFT SW ON?

   YES—Go to step 8.

   NO—Replace the transmission gear selection switch (see page 14-202), then go to step 12.
8. Turn the ignition switch OFF.
9. Jump the SCS line with the HDS.
10. Disconnect PCM connector A (31P).
11. Check for continuity between transmission gear selection switch connector terminal No. 8 and body ground.

TRANSMISSION GEAR SELECTION SWITCH/ PARK PIN SWITCH CONNECTOR

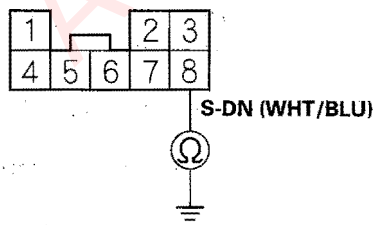

Wire side of female terminals

Is there continuity?

YES—Repair short to ground in the wire between PCM connector terminal A13 and the transmission gear selection switch connector, then go to step 12.

NO—Check for loose or poor connections at PCM connector terminal A13. If the connection is OK, update the PCM if it does not have the latest software, or substitute a known-good PCM (see page 14-6), then recheck. If the symptom/indication goes away with a known-good PCM, replace the original PCM.■

Protected by AR

12. Clear the DTC with the HDS.

13. Start the engine in the P position, wait for more than 10 seconds, then shift to the M position.

14. Push the shift lever toward shiftup position (+) slowly, and return to neutral position; repeat this test 10 times or more.

15. Pull the shift lever toward shiftdown position (−) slowly, and return to neutral position; repeat this test 10 times or more.

16. Check the OBD STATUS in DTCs MENU for a pass/fail test of code P0816.

    Did the result indicate a pass?

    YES—The problem has been corrected.■

    NO—Return to step 1 and recheck.■

Protected by AR

DTC Troubleshooting (cont'd)

DTC P0847: Short in 3rd Clutch Transmission Fluid Pressure Switch Circuit, or 3rd Clutch Transmission Fluid Pressure Switch Stuck ON

NOTE:
- Record all freeze data and review General Troubleshooting Information (see page 14-3) before you troubleshoot.
- This code (if not accompanied by other DTCs) is caused by an electrical circuit problem and cannot be caused by a mechanical problem in the transmission.

1. Clear the DTC with the HDS.
2. Check the 3rd PRESSURE SWITCH signal with the HDS in the A/T data list when not in 3rd gear.

   Is the 3rd PRESSURE SWITCH ON?

   YES—Go to step 5.

   NO—Go to step 3.
3. Start the engine, and warm it up to normal operating temperature (the radiator fan comes on). Drive the vehicle in 3rd gear in the M position for more than 5 seconds, then upshift to 4th gear, and drive in 4th gear for more than 5 seconds. Slow down and stop the wheels.
4. Check the OBD STATUS in DTCs MENU for a pass/fail test of code P0847.

   Did the result indicate a fail?

   YES—Go to step 5.

   NO—Intermittent failure, the system is OK at this time. Check the BLU/WHT wire for an intermittent short to ground between the 3rd clutch transmission fluid pressure switch and PCM. If the tester indicates NOT COMPLETE, return to step 3 and recheck. ■
5. Turn the ignition switch OFF.
6. Disconnect the 3rd clutch transmission fluid pressure switch connector.
7. Turn the ignition switch ON (II).
8. Check the 3rd PRESSURE SWITCH signal with the HDS in the A/T data list.

   Is the 3rd PRESSURE SWITCH OFF?

   YES—Replace the 3rd clutch transmission fluid pressure switch (see page 14-197), then go to step 13.

   NO—Go to step 9.
9. Turn the ignition switch OFF.
10. Jump the SCS line with the HDS.
11. Disconnect PCM connector C (22P).
12. Check for continuity between PCM connector terminal C5 and body ground.

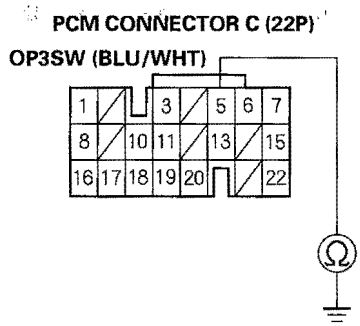

Wire side of female terminals

Is there continuity?

YES—Repair short to ground in the wire between PCM connector terminal C5 and the 3rd clutch transmission fluid pressure switch, then go to step 13.

NO—Update the PCM if it does not have the latest software, or substitute a known-good PCM (see page 14-6), then recheck. If the symptom/indication goes away with a known-good PCM, replace the original PCM. ■

Protected by A R

13. Clear the DTC with the HDS.

14. Start the engine, and warm it up to normal operating temperature (the radiator fan comes on). Drive the vehicle in 3rd gear in the M position for more than 5 seconds, then upshift to 4th gear, and drive in 4th gear for more than 5 seconds. Slow down and stop the wheels.

15. Check the OBD STATUS in DTCs MENU for a pass/fail test of code P0847.

    Did the result indicate a pass?

    YES—The problem has been corrected. ■

    NO—Return to step 1 and recheck. ■

Protected by A R

DTC Troubleshooting (cont'd)

DTC P0848: Open in 3rd Clutch Transmission Fluid Pressure Switch Circuit, or 3rd Clutch Transmission Fluid Pressure Switch Stuck OFF

NOTE:
- Record all freeze data and review General Troubleshooting Information (see page 14-3) before you troubleshoot.
- This code (if not accompanied by other DTCs) is caused by an electrical circuit problem and cannot be caused by a mechanical problem in the transmission.

1. Clear the DTC with the HDS.
2. Start the engine, and warm it up to normal operating temperature (the radiator fan comes on). Drive the vehicle in the 3rd gear in the M position, and verify that the SHIFT MAP NUMBER indicates 3rd with the HDS in the A/T data list.
3. Check the 3rd PRESSURE SWITCH signal with the HDS in the A/T data list.

   Is the 3rd PRESSURE SWITCH ON?

   YES—Go to step 6.

   NO—Go to step 4.
4. Drive the vehicle in 3rd gear in the M position for more than 5 seconds, then upshift to 4th gear, and drive in 4th gear for more than 5 seconds. Slow down and stop the wheels.
5. Check the OBD STATUS in DTCs MENU for a pass/fail test of code P0848.

   Did the result indicate a failed?

   YES—Go to step 6.

   NO—Intermittent failure, the system is OK at this time. Check for poor connections or loose terminals at the 3rd clutch transmission fluid pressure switch and PCM. If the tester indicates NOT COMPLETE, return to step 4 and recheck.■
6. Turn the ignition switch OFF.
7. Disconnect the 3rd clutch transmission fluid pressure switch connector.
8. Turn the ignition switch ON (II).
9. Measure the voltage between the 3rd clutch transmission fluid pressure switch connector terminal and body ground.

3RD CLUTCH TRANSMISSION FLUID PRESSURE SWITCH CONNECTOR

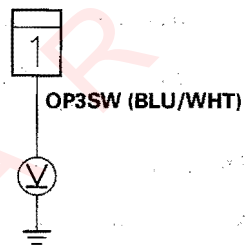

Wire side of female terminals

Is there battery voltage?

YES—Replace the 3rd clutch transmission fluid pressure switch (see page 14-197), then go to step 11.

NO—Go to step 10.

Protected by AR

10. Measure the voltage between PCM connector terminal C5 and body ground.

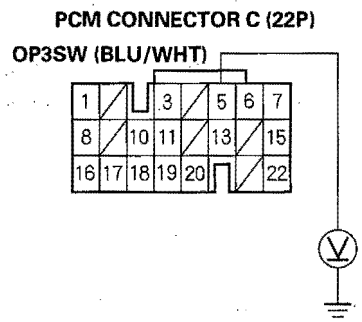

Wire side of female terminals

Is there battery voltage?

YES—Repair open in the wire between PCM connector terminal C5 and the 3rd clutch transmission fluid pressure switch, then go to step 11.

NO—Check for loose or poor connections at PCM connector terminal C5. If the connection is OK, update the PCM if it does not have the latest software, or substitute a known-good PCM (see page 14-6), then recheck. If the symptom/indication goes away with a known-good PCM, replace the original PCM.■

11. Clear the DTC with the HDS.

12. Start the engine, and warm it up to normal operating temperature (the radiator fan comes on). Drive the vehicle in 3rd gear in the M position for more than 5 seconds, then upshift to 4th gear, and drive in 4th gear for more than 5 seconds. Slow down and stop the wheels.

13. Check the OBD STATUS in DTCs MENU for a pass/fail test of code P0848.

Did the result indicate a pass?

YES—The problem has been corrected.■

NO—Return to step 1 and recheck.■

Protected by AR

DTC Troubleshooting (cont'd)

DTC P0872: Short in 4th Clutch Transmission Fluid Pressure Switch Circuit, or 4th Clutch Transmission Fluid Pressure Switch Stuck ON

NOTE:
- Record all freeze data and review General Troubleshooting Information (see page 14-3) before you troubleshoot.
- This code (if not accompanied by other DTCs) is caused by an electrical circuit problem and cannot be caused by a mechanical problem in the transmission.

1. Clear the DTC with the HDS.
2. Check the 4th PRESSURE SWITCH signal with the HDS in the A/T data list when not in 4th gear.

   Is the 4th PRESSURE SWITCH ON?

   YES—Go to step 5.

   NO—Go to step 3.
3. Start the engine, and warm it up to normal operating temperature (the radiator fan comes on). Drive the vehicle in 4th gear in the M position for more than 5 seconds. Slow down and stop the wheels.
4. Check the OBD STATUS in DTCs MENU for a pass/fail test for code P0872.

   Did the result indicate a fail?

   YES—Go to step 5.

   NO—Intermittent failure, the system is OK at this time. Check the BLU/YEL wire for an intermittent short to ground between the 4th clutch transmission fluid pressure switch and PCM. If the tester indicates NOT COMPLETE, return to step 3 and recheck.■
5. Turn the ignition switch OFF.
6. Disconnect the 4th clutch transmission fluid pressure switch connector.
7. Turn the ignition switch ON (II).
8. Check the 4th PRESSURE SWITCH signal with the HDS in the A/T data list.

   Is the 4th PRESSURE SWITCH OFF?

   YES—Replace the 4th clutch transmission fluid pressure switch (see page 14-198), then go to step 13.

   NO—Go to step 9.
9. Turn the ignition switch OFF.
10. Jump the SCS line with the HDS.
11. Disconnect PCM connector C (22P).
12. Check for continuity between PCM connector terminal C13 and body ground.

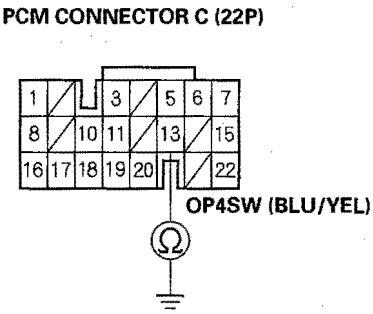

Wire side of female terminals

Is there continuity?

YES—Repair short to ground in the wire between PCM connector terminal C13 and the 4th clutch transmission fluid pressure switch, then go to step 13.

NO—Update the PCM if it does not have the latest software, or substitute a known-good PCM (see page 14-6), then recheck. If the symptom/indication goes away with a known-good PCM, replace the original PCM.■

Protected by AR

13. Clear the DTC with the HDS.

14. Start the engine, and warm it up to normal operating temperature (the radiator fan comes on). Drive the vehicle in 4th gear in the M position for more than 5 seconds. Slow down and stop the wheels.

15. Check the OBD STATUS in DTCs MENU for a pass/fail test of code P0872.

    Did the result indicate a pass?

    YES—The problem has been corrected. ■

    NO—Return to step 1 and recheck. ■

Protected by AR

DTC Troubleshooting (cont'd)

DTC P0873: Open in 4th Clutch Transmission Fluid Pressure Switch Circuit, or 4th Clutch Transmission Fluid Pressure Switch Stuck OFF

NOTE:
- Record all freeze data and review General Troubleshooting Information (see page 14-3) before you troubleshoot.
- This code (if not accompanied by other DTCs) is caused by an electrical circuit problem and cannot be caused by a mechanical problem in the transmission.

1. Clear the DTC with the HDS.
2. Start the engine, and warm it up to normal operating temperature (the radiator fan comes on). Drive the vehicle in 4th gear in the M position, and verify that the SHIFT MAP NUMBER indicates 4th with the HDS in the A/T data list.
3. Check the 4th PRESSURE SWITCH signal with the HDS in the A/T data list.

   Is the 4th PRESSURE SWITCH ON?

   YES—Go to step 6.

   NO—Go to step 4.
4. Drive the vehicle in 4th gear in the M position for more than 5 seconds, then slow down and stop the wheels.
5. Check the OBD STATUS in DTCs MENU for a pass/fail test of code P0873.

   Did the result indicate a fail?

   YES—Go to step 6.

   NO—Intermittent failure, the system is OK at this time. Check for poor connections or loose terminals at the 4th clutch transmission fluid pressure switch and PCM. If the tester indicates NOT COMPLETE, return to step 4 and recheck.■
6. Turn the ignition switch OFF.
7. Disconnect the 4th clutch transmission fluid pressure switch connector.
8. Turn the ignition switch ON (II).
9. Measure the voltage between the 4th clutch transmission fluid pressure switch connector terminal and body ground.

4TH CLUTCH TRANSMISSION FLUID PRESSURE SWITCH CONNECTOR

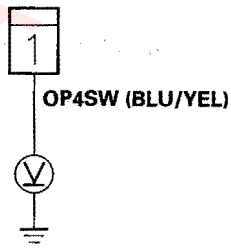

Wire side of female terminals

Is there battery voltage?

YES—Replace the 4th clutch transmission fluid pressure switch (see page 14-198), then go to step 11.

NO—Go to step 10.

Protected by AR

10. Measure the voltage between PCM connector terminal C13 and body ground.

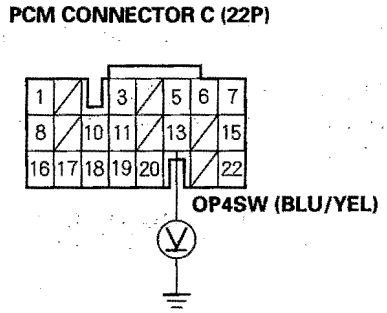

Wire side of female terminals

Is there battery voltage?

YES—Repair open in the wire between PCM connector terminal C13 and the 4th clutch transmission fluid pressure switch, then go to step 11.

NO—Check for loose or poor connections at PCM connector terminal C13. If the connection is OK, update the PCM if it does not have the latest software, or substitute a known-good PCM (see page 14-6), then recheck. If the symptom/indication goes away with a known-good PCM, replace the original PCM.■

11. Clear the DTC with the HDS.

12. Start the engine, and warm it up to normal operating temperature (the radiator fan comes on). Drive the vehicle in 4th gear in the M position for more than 5 seconds. Slow down and stop the wheels.

13. Check the OBD STATUS in DTCs MENU for a pass/fail test of code P0873.

Did the result indicate a pass?

YES—The problem has been corrected.■

NO—Return to step 1 and recheck.

Protected by AR

DTC Troubleshooting (cont'd)

DTC P0957: Short in Transmission Gear Selection Switch Circuit, or Transmission Gear Selection Switch Stuck ON

NOTE:
- Record all freeze data and review General Troubleshooting Information (see page 14-3) before you troubleshoot.
- This code is caused by an electrical circuit problem and cannot be caused by a mechanical problem in the transmission.

1. Turn the ignition switch ON (II).
2. Shift to the P position.
3. Verify the transmission gear selection switch SS (sequential sportshift) MODE SWITCH inputs with the HDS in the A/T data list.

   Is SS MODE SWITCH ON?

   YES—Go to step 4.

   NO—Intermittent failure, the system is OK at this time. Check the ORN wire for an intermittent short to ground between the transmission gear selection switch and PCM.■
4. Turn the ignition switch OFF.
5. Disconnect the transmission gear selection switch connector.
6. Turn the ignition switch ON (II).
7. Verify the transmission gear selection switch SS MODE SWITCH inputs with the HDS in the A/T data list.

   Is SS MODE SWITCH ON?

   YES—Go to step 8.

   NO—Replace the transmission gear selection switch (see page 14-202), then go to step 12.
8. Turn the ignition switch OFF.
9. Jump the SCS line with the HDS.
10. Disconnect PCM connector C (22P).
11. Check for continuity between transmission gear selection switch connector terminal No. 3 and body ground.

TRANSMISSION GEAR SELECTION SWITCH/ PARK PIN SWITCH CONNECTOR

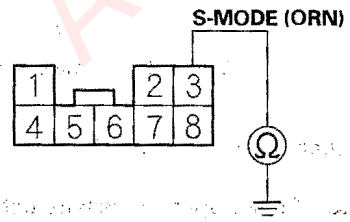

Wire side of female terminals

Is there continuity?

YES—Repair short to ground in the wire between PCM connector terminal C20 and the transmission gear selection switch connector, then go to step 12.

NO—Check for loose or poor connections at PCM connector terminal C20. If the connection is OK, update the PCM if it does not have the latest software, or substitute a known-good PCM (see page 14-6), then recheck. If the symptom/indication goes away with a known-good PCM, replace the original PCM.■

Protected by AR

12. Clear the DTC with the HDS.

13. Start the engine in the P position, wait for more than 10 seconds, then shift to the M position.

14. Push the shift lever toward shiftup position (+) slowly, and return to neutral position; repeat this test 10 times or more.

15. Pull the shift lever toward shiftdown position (−) slowly, and return to neutral position; repeat this test 10 times or more.

16. Check the OBD STATUS in DTCs MENU for a pass/fail test of code P0957.

    Did the result indicate a pass?

    YES—The problem has been corrected. ■

    NO—Return to step 1 and recheck. ■

Protected by AR

DTC Troubleshooting (cont'd)

DTC P0958: Open in Transmission Gear Selection Switch Circuit, or Transmission Gear Selection Switch Stuck OFF

NOTE:
- Record all freeze data and review General Troubleshooting Information (see page 14-3) before you troubleshoot.
- This code is caused by an electrical circuit problem and cannot be caused by a mechanical problem in the transmission.

1. Turn the ignition switch ON (II).
2. Shift to the M position.
3. Verify the transmission gear selection switch SS (sequential sportshift) MODE SWITCH inputs with the HDS in the A/T data list.

   Is SS MODE SWITCH OFF?

   YES—Go to step 4.

   NO—Intermittent failure, the system is OK at this time. Check for poor connections or loose terminals at the transmission gear selection switch and PCM. ■
4. Turn the ignition switch OFF.
5. Disconnect the transmission gear selection switch connector.
6. Check for continuity between transmission gear selection switch connector terminals No. 2 and No. 3.

TRANSMISSION GEAR SELECTION SWITCH/ PARK PIN SWITCH CONNECTOR

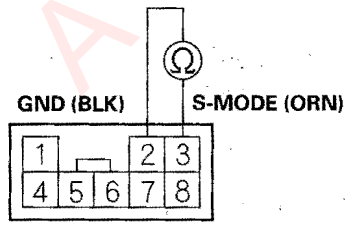

Terminal side of male terminals

Is there continuity when the shift lever is in M position, and no continuity when the shift lever is any other M position?

YES—Go to step 7.

NO—Replace the transmission gear selection switch (see page 14-202), then go to step 10.

Protected by AR

7. Turn the ignition switch ON (II).

8. Measure the voltage between transmission gear selection switch connector terminal No. 3 and body ground.

TRANSMISSION GEAR SELECTION SWITCH/ PARK PIN SWITCH CONNECTOR

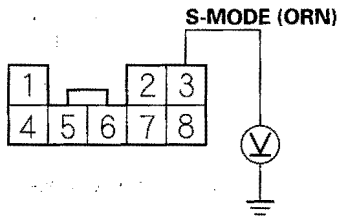

Wire side of female terminals

Is there battery voltage?

YES—Repair open in the wire between transmission gear selection switch connector terminal No. 2 and ground (G503), or repair poor ground (G503), then go to step 10.

NO—Go to step 9.

9. Measure the voltage between PCM connector terminal C20 and body ground.

PCM CONNECTOR C (22P)

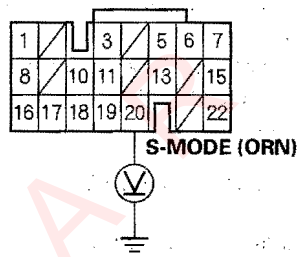

Wire side of female terminals

Is there battery voltage?

YES—Repair open in the wire between PCM connector terminal C20 and the transmission gear selection switch connector, then go to step 10.

NO—Check for loose or poor connections at PCM connector terminal C20. If the connection is OK, update the PCM if it does not have the latest software, or substitute a known-good PCM (see page 14-6), then recheck. If the symptom/indication goes away with a known-good PCM, replace the original PCM. ■

10. Clear the DTC with the HDS.

11. Start the engine in the P position, wait for more than 10 seconds, then shift to the M position.

12. Push the shift lever toward shiftup position (+) slowly, and return to neutral position; repeat this test 10 times or more.

13. Pull the shift lever toward shiftdown position (−) slowly, and return to neutral position; repeat this test 10 times or more.

14. Check the OBD STATUS in DTCs MENU for a pass/ fail test of code P0958.

Did the result indicate a pass?

YES—The problem has been corrected. ■

NO—Return to step 1 and recheck. ■

Protected by A

DTC Troubleshooting (cont'd)

DTC P0962: Problem in A/T Clutch Pressure Control Solenoid Valve A Circuit

NOTE:
- Record all freeze data and review General Troubleshooting Information (see page 14-3) before you troubleshoot.
- This code is caused by an electrical circuit problem and cannot be caused by a mechanical problem in the transmission.

1. Clear the DTC with the HDS.
2. Check that DTC P0962 recurs.

   Is DTC P0962 indicated?

   YES—Go to step 6.

   NO—Go to step 3.
3. Select P CTRL SOL CONTROL in MISCELLANEOUS TEST MENU, then select P. CONTROL SOL A in P CTRL SOL CTRL MENU with the HDS.
4. Set the A/T clutch pressure control solenoid valve A to 1.0A in SOL A CONTROL menu.
5. Check the OBD STATUS in DTCs MENU for a pass/fail test of code P0962.

   Did the result indicate a fail?

   YES—Go to step 6.

   NO—Intermittent failure, the system is OK at this time. Check for poor connections or loose terminals at the A/T clutch pressure control solenoid valve A and PCM. If the tester indicates NOT COMPLETE, return to step 3 and recheck. ■
6. Turn the ignition switch OFF.
7. Disconnect the A/T clutch pressure control solenoid valve A connector.
8. Measure A/T clutch pressure control solenoid valve A resistance at the solenoid connector.

   A/T CLUTCH PRESSURE CONTROL SOLENOID VALVE A CONNECTOR

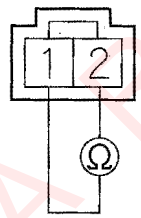

   Terminal side of male terminals

   Is there 3—10 Ω ?

   YES—Go to step 9.

   NO—Replace the A/T clutch pressure control solenoid valve A (see page 14-191), then go to step 13.
9. Check for continuity between A/T clutch pressure control solenoid valve A connector terminal No.2 and body ground.

   A/T CLUTCH PRESSURE CONTROL SOLENOID VALVE A CONNECTOR

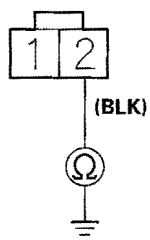

   Wire side of female terminals

   Is there continuity?

   YES—Go to step 10.

   NO—Repair open in the wire between the A/T clutch pressure control solenoid valve A and ground (G151), or repair poor ground (G151), or repair poor ground (G151), then go to step 13.

Protected by AR

10. Turn the ignition switch ON (II).

11. Measure the voltage between A/T clutch pressure control solenoid valve A connector terminals No. 1 and No. 2 as the ignition switch is turned ON.

A/T CLUTCH PRESSURE CONTROL SOLENOID VALVE A CONNECTOR

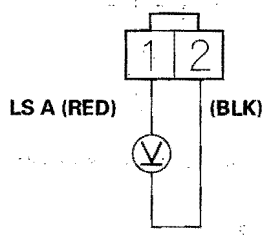

Wire side of female terminals

Is there momentarily about battery voltage?

YES—Go to step 12.

NO—Repair open or short in the wire between PCM connector terminal C7 and A/T clutch pressure control solenoid valve A, then go to step 13.

12. Measure the voltage between PCM connector terminals E10 and B15 or E3.

PCM CONNECTORS

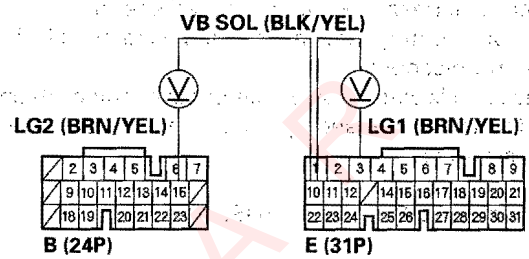

Wire side of female terminals

Is there battery voltage?

YES—Check for loose or poor connections at PCM connector terminal E10. If the connection is OK, update the PCM if it does not have the latest software, or substitute a known-good PCM (see page 14-6), then recheck. If the symptom/indication goes away with a known-good PCM, replace the original PCM.■

NO— Check for blown No. 18 fuse in the under-dash fuse/relay box. If the fuse is OK, repair open in the wire between PCM connector terminal E10 and the under-dash fuse/relay box, then go to step 13.

13. Clear the DTC with the HDS.

14. Test-drive the vehicle for several minutes in the D position in all five gears.

15. Check the OBD STATUS in DTCs MENU for a pass/fail test of code P0962.

Did the result indicate a pass?

YES—The problem has been corrected.■

NO—Return to step 1 and recheck.■

Protected by A P

DTC Troubleshooting (cont'd)

DTC P0963: Problem in A/T Clutch Pressure Control Solenoid Valve A

NOTE:
- Record all freeze data and review General Troubleshooting Information (see page 14-3) before you troubleshoot.
- This code is caused by an electrical circuit problem and cannot be caused by a mechanical problem in the transmission.

1. Clear the DTC with the HDS.
2. Check that DTC P0963 recurs.

   Is DTC P0963 indicated?

   YES—Go to step 6.

   NO—Go to step 3.
3. Select P CTRL SOL CONTROL in MISCELLANEOUS TEST MENU, then select P. CONTROL SOL A in P CTRL SOL CTRL MENU with the HDS.
4. Set the A/T clutch pressure control solenoid valve A to 0.2A in SOL A CONTROL menu.
5. Check the OBD STATUS in DTCs MENU for a pass/fail test of code P0963.

   Did the result indicate a fail?

   YES—Go to step 6.

   NO—Intermittent failure, the system is OK at this time. Check for poor connections or loose terminals at the A/T clutch pressure control solenoid valve A and PCM. If the tester indicates NOT COMPLETE, return to step 3 and recheck. ■
6. Turn the ignition switch OFF.
7. Disconnect the A/T clutch pressure control solenoid valve A connector.
8. Measure A/T clutch pressure control solenoid valve A resistance at the solenoid connector.

   A/T CLUTCH PRESSURE CONTROL SOLENOID VALVE A CONNECTOR

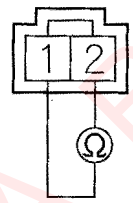

   Terminal side of male terminals

   Is there 3—10 Ω ?

   YES—Go to step 9.

   NO—Replace the A/T clutch pressure control solenoid valve A (see page 14-191), then go to step 10.
9. Check for continuity between A/T clutch pressure control solenoid valve A connector terminal No. 2 and body ground.

   A/T CLUTCH PRESSURE CONTROL SOLENOID VALVE A CONNECTOR

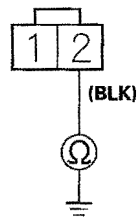

   Wire side of female terminals

   Is there continuity?

   YES—Update the PCM if it does not have the latest software, or substitute a known-good PCM (see page 14-6), then recheck. If the symptom/indication goes away with a known-good PCM, replace the original PCM. ■

   NO—Repair open in the wire between the A/T clutch pressure control solenoid valve A and ground (G151), or repair poor ground (G151), then go to step 10.

Protected by AR

10. Clear the DTC with the HDS.
11. Test-drive the vehicle for several minutes in the D position in all five gears.
12. Check the OBD STATUS in DTCs MENU for a pass/fail test of code P0963.

    Did the result indicate a pass?

    YES—The problem has been corrected. ■

    NO—Return to step 1 and recheck. ■

Protected by A R

DTC Troubleshooting (cont'd)

DTC P0966: Problem in A/T Clutch Pressure Control Solenoid Valve B Circuit

NOTE:
- Record all freeze data and review General Troubleshooting Information (see page 14-3) before you troubleshoot.
- This code is caused by an electrical circuit problem and cannot be caused by a mechanical problem in the transmission.

1. Clear the DTC with the HDS.
2. Check that DTC P0966 recurs.

   Is DTC P0966 indicated?

   YES – Go to step 6.

   NO – Go to step 3.
3. Select P CTRL SOL CONTROL in MISCELLANEOUS TEST MENU, then select P. CONTROL SOL B in P CTRL SOL CTRL MENU with the HDS.
4. Set the A/T clutch pressure control solenoid valve B to 1.0A in SOL B CONTROL menu.
5. Check the OBD STATUS in DTCs MENU for a pass/fail test of code P0966.

   Did the result indicate a fail?

   YES – Go to step 6.

   NO – Intermittent failure, the system is OK at this time. Check for poor connections or loose terminals at the A/T clutch pressure control solenoid valve B and PCM. If the tester indicates NOT COMPLETE, return to step 3 and recheck. ■
6. Turn the ignition switch OFF.
7. Disconnect the A/T clutch pressure control solenoid valve B connector.
8. Measure A/T clutch pressure control solenoid valve B resistance at the solenoid connector.

   A/T CLUTCH PRESSURE CONTROL SOLENOID VALVE B CONNECTOR

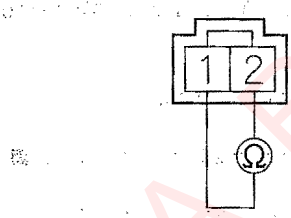

Terminal side of male terminals

   Is there 3– 10 Ω ?

   YES – Go to step 9.

   NO – Replace the A/T clutch pressure control solenoid valve B (see page 14-191), then go to step 13.
9. Check for continuity between A/T clutch pressure control solenoid valve B connector terminal No. 2 and body ground.

   A/T CLUTCH PRESSURE CONTROL SOLENOID VALVE B CONNECTOR

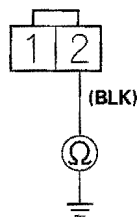

Wire side of female terminals

   Is there continuity?

   YES – Go to step 10.

   NO – Repair open in the wire between the A/T clutch pressure control solenoid valve B and ground (G151), or repair poor ground (G151), then go to step 13.

Protected by AR

10. Turn the ignition switch ON (II).

11. Measure the voltage between A/T clutch pressure control solenoid valve B connector terminals No. 1 and No. 2 as the ignition switch is turned ON.

A/T CLUTCH PRESSURE CONTROL SOLENOID VALVE B CONNECTOR

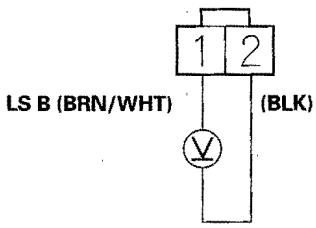

Wire side of female terminals

Is there momentarily about battery voltage?

YES—Go to step 12.

NO—Repair open or short in the wire between PCM connector terminal C15 and A/T clutch pressure control solenoid valve B, then go to step 13.

12. Measure the voltage between PCM connector terminals E10 and B15 or E3.

PCM CONNECTORS

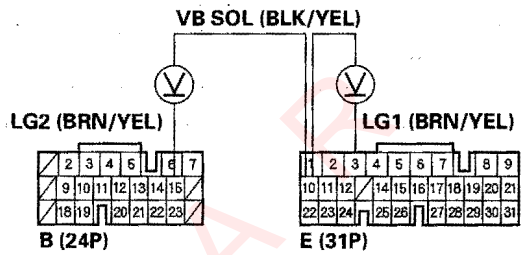

Wire side of female terminals

Is there battery voltage?

YES—Check for loose or poor connections at PCM connector terminal E10. If the connection is OK, update the PCM if it does not have the latest software, or substitute a known-good PCM (see page 14-6), then recheck. If the symptom/indication goes away with a known-good PCM, replace the original PCM. ■

NO—Check for blown No. 18 fuse in the under-dash fuse/relay box. If the fuse is OK, repair open in the wire between PCM connector terminal E10 and the under-dash fuse/relay box, then go to step 13.

13. Clear the DTC with the HDS.

14. Test-drive the vehicle for several minutes in the D position in all five gears.

15. Check the OBD STATUS in DTCs MENU for a pass/fail test of code P0966.

Did the result indicate a pass?

YES—The problem has been corrected. ■

NO—Return to step 1 and recheck. ■

Protected by A P

DTC Troubleshooting (cont'd)

DTC P0967: Problem in A/T Clutch Pressure Control Solenoid Valve B

NOTE:
- Record all freeze data and review General Troubleshooting Information (see page 14-3) before you troubleshoot.
- This code is caused by an electrical circuit problem and cannot be caused by a mechanical problem in the transmission.

1. Clear the DTC with the HDS.
2. Check that DTC P0967 recurs.

   Is DTC P0967 indicated?

   YES—Go to step 6.

   NO—Go to step 3.
3. Select P CTRL SOL CONTROL in MISCELLANEOUS TEST MENU, then select P. CONTROL SOL B in P CTRL SOL CTRL MENU with the HDS.
4. Set the A/T clutch pressure control solenoid valve B to 0.2A in SOL B CONTROL menu.
5. Check the OBD STATUS in DTCs MENU for a pass/fail test of code P0967.

   Did the result indicate a fail?

   YES—Go to step 6.

   NO—Intermittent failure, the system is OK at this time. Check for poor connections or loose terminals at the A/T clutch pressure control solenoid valve B and PCM. If the tester indicates NOT COMPLETE, return to step 3 and recheck.■
6. Turn the ignition switch OFF.
7. Disconnect the A/T clutch pressure control solenoid valve B connector.
8. Measure A/T clutch pressure control solenoid valve B resistance at the solenoid connector.

   A/T CLUTCH PRESSURE CONTROL SOLENOID VALVE B CONNECTOR

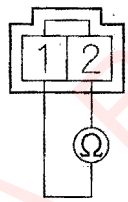

   Terminal side of male terminals

   Is there 3—10 Ω ?

   YES—Go to step 9.

   NO—Replace the A/T clutch pressure control solenoid valve B (see page 14-191), then go to step 10.
9. Check for continuity between A/T clutch pressure control solenoid valve A connector terminal No. 2 and body ground.

   A/T CLUTCH PRESSURE CONTROL SOLENOID VALVE B CONNECTOR

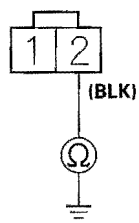

   Wire side of female terminals

   Is there continuity?

   YES—Update the PCM if it does not have the latest software, or substitute a known-good PCM (see page 14-6), then recheck. If the symptom/indication goes away with a known-good PCM, replace the original PCM.■

   NO—Repair open in the wire between the A/T clutch pressure control solenoid valve B and ground (G151), or repair poor ground (G151), then go to step 10.

Protected by AR

10. Clear the DTC with the HDS.

11. Test-drive the vehicle for several minutes in the D position in all five gears.

12. Check the OBD STATUS in DTCs MENU for a pass/fail test of code P0967.

    Did the result indicate a pass?

    YES—The problem has been corrected.■

    NO—Return to step 1 and recheck.■

Protected by A R

DTC Troubleshooting (cont'd)

DTC P0970: Problem in A/T Clutch Pressure Control Solenoid Valve C Circuit

NOTE:
- Record all freeze data and review General Troubleshooting Information (see page 14-3) before you troubleshoot.
- This code is caused by an electrical circuit problem and cannot be caused by a mechanical problem in the transmission.

1. Clear the DTC with the HDS.
2. Check that DTC P0970 recurs.

   Is DTC P0970 indicated?

   YES – Go to step 6.

   NO – Go to step 3.
3. Select P CTRL SOL CONTROL in MISCELLANEOUS TEST MENU, then select P. CONTROL SOL C in P CTRL SOL CTRL MENU with the HDS.
4. Set the A/T clutch pressure control solenoid valve C to 1.0A in SOL C CONTROL menu.
5. Check the OBD STATUS in DTCs MENU for a pass/fail test of code P0970.

   Did the result indicate a fail?

   YES – Go to step 6.

   NO – Intermittent failure, the system is OK at this time. Check for poor connections or loose terminals at the A/T clutch pressure control solenoid valve C and PCM. If the tester indicates NOT COMPLETE, return to step 3 and recheck. ■
6. Turn the ignition switch OFF.
7. Disconnect the A/T clutch pressure control solenoid valve C connector.
8. Measure A/T clutch pressure control solenoid valve C resistance at the solenoid connector.

   A/T CLUTCH PRESSURE CONTROL SOLENOID VALVE C CONNECTOR

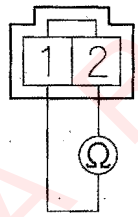

Terminal side of male terminals

   Is there 3 – 10 Ω ?

   YES – Go to step 9.

   NO – Replace the A/T clutch pressure control solenoid valve C (see page 14-194), then go to step 13.
9. Check for continuity between A/T clutch pressure control solenoid valve C connector terminal No. 2 and body ground.

   A/T CLUTCH PRESSURE CONTROL SOLENOID VALVE C CONNECTOR

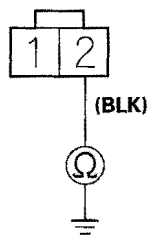

Wire side of female terminals

   Is there continuity?

   YES – Go to step 10.

   NO – Repair open in the wire between the A/T clutch pressure control solenoid valve C and ground (G151), or repair poor ground (G151), then go to step 13.

Protected by AR

10. Turn the ignition switch ON (II).

11. Measure the voltage between A/T clutch pressure control solenoid valve C connector terminals No. 1 and No. 2 as the ignition switch is turned ON.

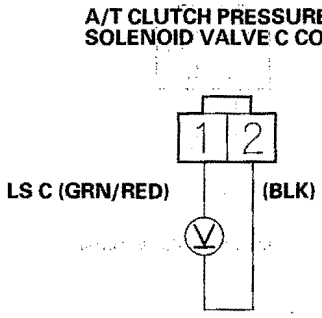

Wire side of female terminals

Is there momentarily about battery voltage?

YES—Go to step 12.

NO—Repair open or short in the wire between PCM connector terminal C22 and A/T clutch pressure control solenoid valve C, then go to step 13.

12. Measure the voltage between PCM connector terminals E10 and B15 or E3.

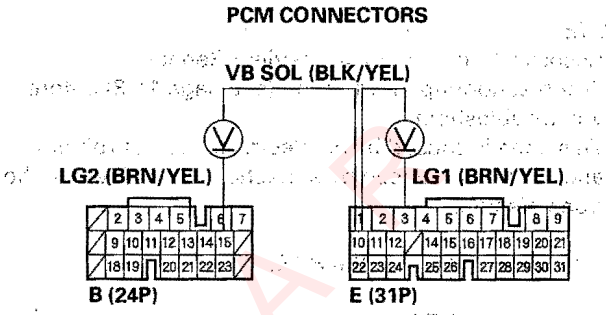

Wire side of female terminals

Is there battery voltage?

YES—Check for loose or poor connections at PCM connector terminal E10. If the connection is OK, update the PCM if it does not have the latest software, or substitute a known-good PCM (see page 14-6), then recheck. If the symptom/indication goes away with a known-good PCM, replace the original PCM. ■

NO—Check for blown No. 18 fuse in the under-dash fuse/relay box. If the fuse is OK, repair open in the wire between PCM connector terminal E10 and the under-dash fuse/relay box, then go to step 13.

13. Clear the DTC with the HDS.

14. Test-drive the vehicle for several minutes in the D position in all five gears.

15. Check the OBD STATUS in DTCs MENU for a pass/fail test of code P0970.

Did the result indicate a pass?

YES—The problem has been corrected. ■

NO—Return to step 1 and recheck. ■

Protected by AP

DTC Troubleshooting (cont'd)

DTC P0971: Problem in A/T Clutch Pressure Control Solenoid Valve C

NOTE:
- Record all freeze data and review General Troubleshooting Information (see page 14-3) before you troubleshoot.
- This code is caused by an electrical circuit problem and cannot be caused by a mechanical problem in the transmission.

1. Clear the DTC with the HDS.
2. Check that DTC P0971 recurs.

   Is DTC P0971 indicated?

   YES—Go to step 6.

   NO—Go to step 3.
3. Select P CTRL SOL CONTROL in MISCELLANEOUS TEST MENU, then select P. CONTROL SOL C in P CTRL SOL CTRL MENU with the HDS.
4. Set the A/T clutch pressure control solenoid valve C to 0.2A in SOL C CONTROL menu.
5. Check the OBD STATUS in DTCs MENU for a pass/fail test of code P0971.

   Did the result indicate a fail?

   YES—Go to step 6.

   NO—Intermittent failure, the system is OK at this time. Check for poor connections or loose terminals at the A/T clutch pressure control solenoid valve C and PCM. If the tester indicates NOT COMPLETE, return to step 3 and recheck. ■
6. Turn the ignition switch OFF.
7. Disconnect the A/T clutch pressure control solenoid valve C connector.
8. Measure A/T clutch pressure control solenoid valve C resistance at the solenoid connector.

   A/T CLUTCH PRESSURE CONTROL SOLENOID VALVE C CONNECTOR

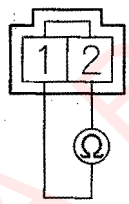

Terminal side of male terminals

   Is there 3—10 Ω ?

   YES—Go to step 9.

   NO—Replace the A/T clutch pressure control solenoid valve C (see page 14-194), then go to step 10.
9. Check for continuity between A/T clutch pressure control solenoid valve A connector terminal No. 2 and body ground.

   A/T CLUTCH PRESSURE CONTROL SOLENOID VALVE C CONNECTOR

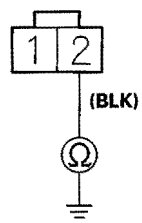

Wire side of female terminals

   Is there continuity?

   YES—Update the PCM if it does not have the latest software, or substitute a known-good PCM (see page 14-6), then recheck. If the symptom/indication goes away with a known-good PCM, replace the original PCM. ■

   NO—Repair open in the wire between the A/T clutch pressure control solenoid valve C and ground (G151), or repair poor ground (G151), then go to step 10.

Protected by AR

10. Clear the DTC with the HDS.

11. Test-drive the vehicle for several minutes in the D position in all five gears.

12. Check the OBD STATUS in DTCs MENU for a pass/fail test of code P0971.

    Did the result indicate a pass?

    YES—The problem has been corrected. ■

    NO—Return to step 1 and recheck. ■

Protected by A R

DTC Troubleshooting (cont'd)

DTC P0973: Short in Shift Solenoid Valve A Circuit

NOTE:
- Record all freeze data and review General Troubleshooting Information (see page 14-3) before you troubleshoot.
- This code is caused by an electrical circuit problem and cannot be caused by a mechanical problem in the transmission.

1. Clear the DTC with the HDS.
2. Test-drive the vehicle for several minutes in the D position in all five gears.
3. Check that DTC P0973 recurs.

   Is DTC P0973 indicated?

   YES—Go to step 7.

   NO—Go to step 4.
4. Select SHIFT SOL TEST in MISCELLANEOUS TEST MENU, then carry out A/T SHIFT SOL A test in SHIFT SOL TEST MENU with the HDS.
5. Test drive the vehicle for several minutes in the D position in all five gears.
6. Check the OBD STATUS in DTCs MENU for a pass/fail test of code P0973.

   Did the result indicate a fail?

   YES—Go to step 7.

   NO—Intermittent failure, the system is OK at this time. Check the BLU/YEL wire for an intermittent short to ground between shift solenoid valve A and PCM. If the tester indicates NOT COMPLETE, return to step 4 and recheck.■
7. Turn the ignition switch OFF.
8. Jump the SCS line with the HDS.
9. Disconnect PCM connectors B (24P), C (22P), and E (31P).
10. Measure the resistance between PCM connector terminals C1 and B15 or E3.

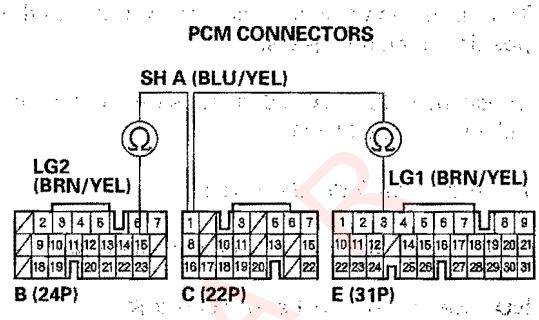

Wire side of female terminals

Is there less than 12 Ω ?

YES—Go to step 11.

NO—Update the PCM if it does not have the latest software, or substitute a known-good PCM (see page 14-6), then recheck. If the symptom/indication goes away with a known-good PCM, replace the original PCM.■

11. Disconnect shift solenoid valve A connector.
12. Check for continuity between PCM connector terminals C1 and B15 or E3.

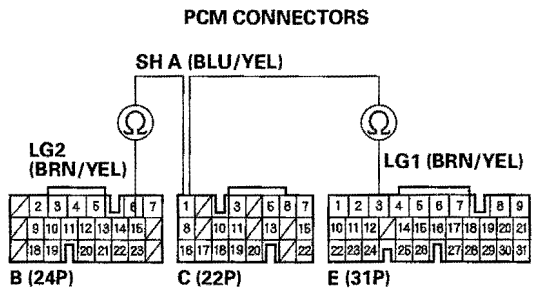

Wire side of female terminals

Is there continuity?

YES—Repair short to ground in the wire between PCM connector terminal C1 and shift solenoid valve A, then go to step 16.

NO—Go to step 13.

Protected by ARS

13. Measure shift solenoid valve A resistance at the solenoid valve connector.

SHIFT SOLENOID VALVE A CONNECTOR

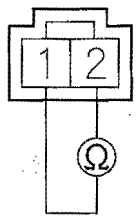

Terminal side of male terminals

Is there 12–25 Ω ?

YES—Go to step 14.

NO—Replace shift solenoid valve A (see page 14-181), then go to step 16.

14. Turn the ignition switch ON (II).

15. Measure the voltage between PCM connector terminals E10 and B15 or E3.

PCM CONNECTORS

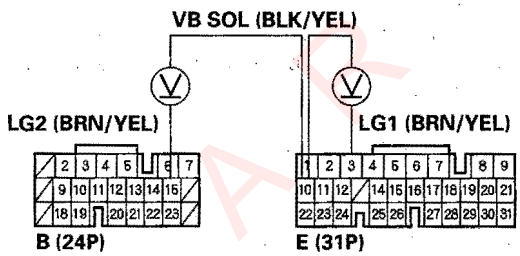

Wire side of female terminals

Is there battery voltage?

YES—Check for loose or poor connections at PCM connector terminal E10. If the connection is OK, update the PCM if it does not have the latest software, or substitute a known-good PCM (see page 14-6), then recheck. If the symptom/indication goes away with a known-good PCM, replace the original PCM. ■

NO—Check for blown No. 18 fuse in the under-dash fuse/relay box. If the fuse is OK, repair open in the wire between PCM connector terminal E10 and the under-dash fuse/relay box, then go to step 16.

16. Clear the DTC with the HDS.

17. Test-drive the vehicle for several minutes in the D position in all five gears.

18. Check the OBD STATUS in DTCs MENU for a pass/fail test of code P0973.

Did the result indicate a pass?

YES—The problem has been corrected. ■

NO—Return to step 1 and recheck. ■

Protected by AR

DTC Troubleshooting (cont'd)

DTC P0974: Open in Shift Solenoid Valve A Circuit

NOTE:
- Record all freeze data and review General Troubleshooting Information (see page 14-3) before you troubleshoot.
- This code is caused by an electrical circuit problem and cannot be caused by a mechanical problem in the transmission.

1. Clear the DTC with the HDS.
2. Test-drive the vehicle for several minutes in the D position in all five gears.
3. Check that DTC P0974 recurs.

   Is DTC P0974 indicated?

   YES—Go to step 7.

   NO—Go to step 4.
4. Select SHIFT SOL TEST in MISCELLANEOUS TEST MENU, then carry out A/T SHIFT SOL A test in SHIFT SOL TEST MENU with the HDS.
5. Test-drive the vehicle for several minutes in the D position in all five gears.
6. Check the OBD STATUS in DTCs MENU for a pass/fail test of code P0974.

   Did the result indicate a fail?

   YES—Go to step 7.

   NO—Intermittent failure, the system is OK at this time. Check for poor connections or loose terminals at shift solenoid valve A and PCM. If the tester indicates NOT COMPLETE, return to step 4 and recheck.■
7. Turn the ignition switch OFF.
8. Jump the SCS line with the HDS.
9. Disconnect PCM connectors B (24P), C (22P), and E (31P).
10. Measure the resistance between PCM connector terminals C1 and B15 or E3.

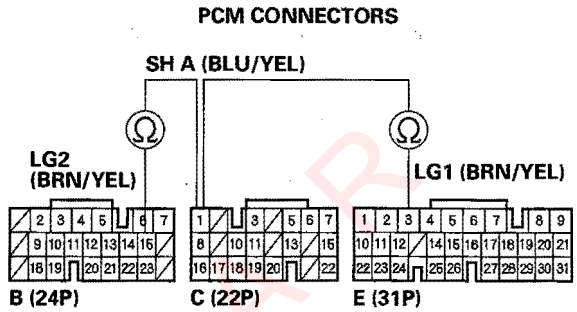

Wire side of female terminals

Is there 12—25 Ω ?

YES—Check for loose or poor connections at PCM connector terminal C1. If the connection is OK, update the PCM if it does not have the latest software, or substitute a known-good PCM (see page 14-6), then recheck. If the symptom/indication goes away with a known-good PCM, replace the original PCM.■

NO—Go to step 11.

Protected by ARS

11. Disconnect shift solenoid valve A connector.

12. Measure shift solenoid valve A resistance at the solenoid valve connector.

SHIFT SOLENOID VALVE A CONNECTOR

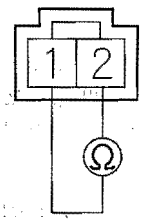

Terminal side of male terminals

Is there 12–25 Ω ?

YES—Go to step 13.

NO—Replace shift solenoid valve A (see page 14-181), then go to step 14.

13. Check for continuity between shift solenoid valve A connector terminal No. 2 and body ground.

SHIFT SOLENOID VALVE A CONNECTOR

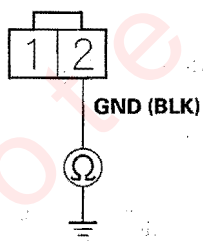

Wire side of female terminals

Is there continuity?

YES—Repair open in the wire between PCM connector terminal C1 and shift solenoid valve A, then go to step 14.

NO—Repair open in the wire between shift solenoid valve A and ground (G151), or repair poor ground (G151) then go to step 14.

14. Clear the DTC with the HDS.

15. Test-drive the vehicle for several minutes in the D position in all five gears.

16. Check the OBD STATUS in DTCs MENU for a pass/fail test of code P0974.

Did the result indicate a pass?

YES—The problem has been corrected. ■

NO—Return to step 1 and recheck. ■

Protected by AR

DTC Troubleshooting (cont'd)

DTC P0976: Short in Shift Solenoid Valve B Circuit

NOTE:
- Record all freeze data and review General Troubleshooting Information (see page 14-3) before you troubleshoot.
- This code is caused by an electrical circuit problem and cannot be caused by a mechanical problem in the transmission.

1. Clear the DTC with the HDS.
2. Test-drive the vehicle for several minutes in the D position in all five gears.
3. Check that DTC P0976 recurs.

   Is DTC P0976 indicated?

   YES—Go to step 7.

   NO—Go to step 4.
4. Select SHIFT SOL TEST in MISCELLANEOUS TEST MENU, then carry out A/T SHIFT SOL B test in SHIFT SOL TEST MENU with the HDS.
5. Test-drive the vehicle for several minutes in the D position in all five gears.
6. Check the OBD STATUS in DTCs MENU for a pass/fail test of code P0976.

   Did the result indicate a fail?

   YES—Go to step 7.

   NO—Intermittent failure, the system is OK at this time. Check the GRN/WHT wire for an intermittent short to ground between shift solenoid valve B and PCM. If the tester indicates NOT COMPLETE, return to step 4 and recheck.■
7. Turn the ignition switch OFF.
8. Jump the SCS line with the HDS.
9. Disconnect PCM connectors B (24P), (22P), and E (31P).
10. Measure the resistance between PCM connector terminals C8 and B15 or E3.

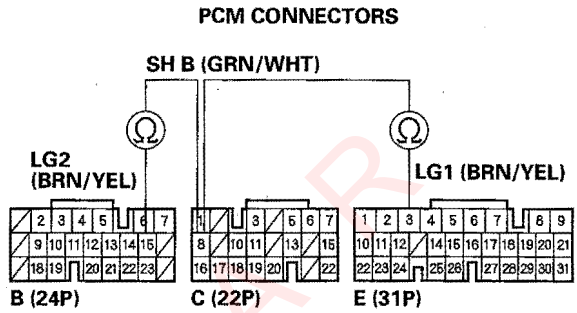

Wire side of female terminals

Is there less than 12 Ω ?

YES—Go to step 11.

NO—Update the PCM if it does not have the latest software, or substitute a known-good PCM (see page 14-6), then recheck. If the symptom/indication goes away with a known-good PCM, replace the original PCM.■
11. Disconnect shift solenoid valve B connector.
12. Check for continuity between PCM connector terminals C8 and B15 or E3.

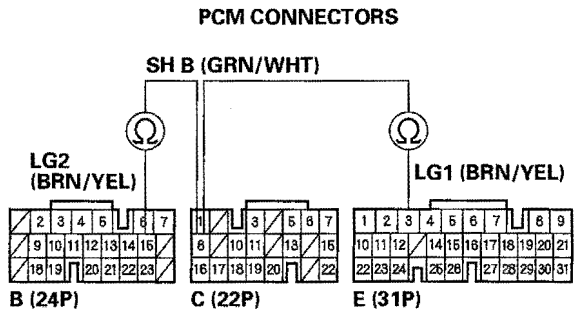

Wire side of female terminals

Is there continuity?

YES—Repair short to ground in the wire between PCM connector terminal C8 and shift solenoid valve B, then go to step 16.

NO—Go to step 13.

Protected by ARS

13. Measure shift solenoid valve B resistance at the solenoid valve connector.

SHIFT SOLENOID VALVE B CONNECTOR

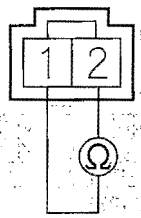

Terminal side of male terminals

Is there 12—25 Ω ?

YES—Go to step 14.

NO—Replace the shift solenoid valve B (see page 14-183), then go to step 16.

14. Turn the ignition switch ON (II).

15. Measure the voltage between PCM connector terminals E10 and B15 or E3.

PCM CONNECTORS

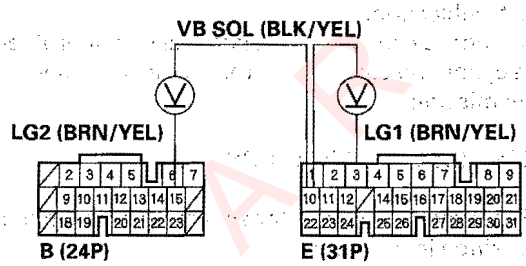

Wire side of female terminals

Is there battery voltage?

YES—Check for loose or poor connections at PCM connector terminal E10. If the connection is OK, update the PCM if it does not have the latest software, or substitute a known-good PCM (see page 14-6), then recheck. If the symptom/indication goes away with a known-good PCM, replace the original PCM. ■

NO—Check for blown No. 18 fuse in the under-dash fuse/relay box. If the fuse is OK, repair open in the wire between PCM connector terminal E10 and the under-dash fuse/relay box, then go to step 16.

16. Clear the DTC with the HDS.

17. Test-drive the vehicle for several minutes in the D position in all five gears.

18. Check the OBD STATUS in DTCs MENU for a pass/fail test of code P0976.

Did the result indicate a pass?

YES—The problem has been corrected. ■

NO—Return to step 1 and recheck. ■

Protected by AR

DTC Troubleshooting (cont'd)

DTC P0977: Open in Shift Solenoid Valve B Circuit

NOTE:
- Record all freeze data and review General Troubleshooting Information (see page 14-3) before you troubleshoot.
- This code is caused by an electrical circuit problem and cannot be caused by a mechanical problem in the transmission.

1. Clear the DTC with the HDS.
2. Test drive the vehicle for several minutes in the D position in all five gears.
3. Check that DTC P0977 recurs.

   Is DTC P0977 indicated?

   YES—Go to step 7.

   NO—Go to step 4.
4. Select SHIFT SOL TEST in MISCELLANEOUS TEST MENU, then carry out A/T SHIFT SOL B test in SHIFT SOL TEST MENU with the HDS.
5. Test drive the vehicle for several minutes in the D position in all five gears.
6. Check the OBD STATUS in DTCs MENU for a pass/fail test of code P0977.

   Did the result indicate a fail?

   YES—Go to step 7.

   NO—Intermittent failure, the system is OK at this time. Check for poor connections or loose terminals at shift solenoid valve B and PCM. If the tester indicates NOT COMPLETE, return to step 4 and recheck.■
7. Turn the ignition switch OFF.
8. Jump the SCS line with HDS.
9. Disconnect PCM connectors B (24P), C (22P), and E (31P).
10. Measure the resistance between PCM connector terminals C8 and B15 or E3.

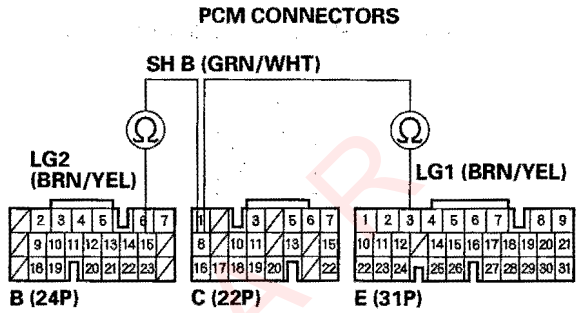

Wire side of female terminals

Is there 12—25 Ω ?

YES—Check for loose or poor connections at PCM connector terminal C8. If the connection is OK, update the PCM if it does not have the latest software, or substitute a known-good PCM (see page 14-6), then recheck. If the symptom/indication goes away with a known-good PCM, replace the original PCM.■

NO—Go to step 11.

Protected by ARG

11. Disconnect shift solenoid valve B connector.

12. Measure shift solenoid valve B resistance at the solenoid valve connector.

SHIFT SOLENOID VALVE B CONNECTOR

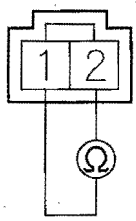

Terminal side of male terminals

Is there 12—25 Ω ?

YES—Go to step 13.

NO—Replace shift solenoid valve B (see page 14-183), then go to step 14.

13. Check for continuity between shift solenoid valve B connector terminal No. 2 and body ground.

SHIFT SOLENOID VALVE B CONNECTOR

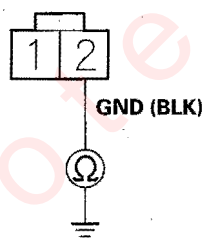

Wire side of female terminals

Is there continuity?

YES—Repair open in the wire between PCM connector terminal C8 and shift solenoid valve B, then go to step 14.

NO—Repair open in the wire between shift solenoid valve B and ground (G151), or repair poor ground (G151), then go to step 14.

14. Clear the DTC with the HDS.

15. Test-drive the vehicle for several minutes in the D position in all five gears.

16. Check the OBD STATUS in DTCs MENU for a pass/fail test of code P0977.

Did the result indicate a pass?

YES—The problem has been corrected. ■

NO—Return to step 1 and recheck. ■

Protected by AR

DTC Troubleshooting (cont'd)

DTC P0979: Short in Shift Solenoid Valve C Circuit

NOTE:
- Record all freeze data and review General Troubleshooting Information (see page 14-3) before you troubleshoot.
- This code is caused by an electrical circuit problem and cannot be caused by a mechanical problem in the transmission.

1. Clear the DTC with the HDS.
2. Test-drive the vehicle for several minutes in the D position in all five gears.
3. Check that DTC P0979 recurs.

   Is DTC P0979 indicated?

   YES—Go to step 7.

   NO—Go to step 4.
4. Select SHIFT SOL TEST in MISCELLANEOUS TEST MENU, then carry out A/T SHIFT SOL C test in SHIFT SOL TEST MENU with the HDS.
5. Test-drive the vehicle for several minutes in the D position in all five gears.
6. Check the OBD STATUS in DTCs MENU for a pass/fail test of code P0979.

   Did the result indicate a fail?

   YES—Go to step 7.

   NO—Intermittent failure, the system is OK at this time. Check the GRN wire for an intermittent short to ground between shift solenoid valve C and PCM. If the tester indicates NOT COMPLETE, return to step 4 and recheck.■
7. Turn the ignition switch OFF.
8. Jump the SCS line with the HDS.
9. Disconnect PCM connectors B (24P), C (22P), and E (31P).
10. Measure the resistance between PCM connector terminals C16 and B15 or E3.

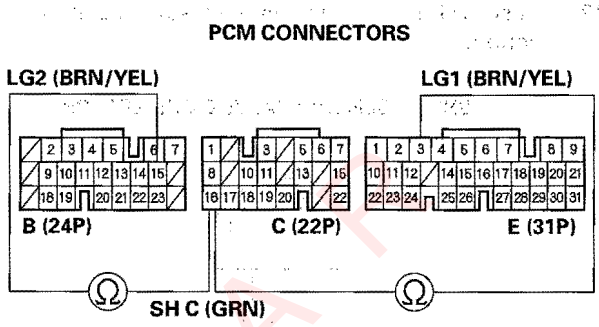

Wire side of female terminals

Is there less than 12 Ω ?

YES—Go to step 11.

NO—Update the PCM if it does not have the latest software, or substitute a known-good PCM (see page 14-6), then recheck. If the symptom/indication goes away with a known-good PCM, replace the original PCM.■
11. Disconnect shift solenoid valve C connector.
12. Check for continuity between PCM connector terminals C16 and B15 or E3.

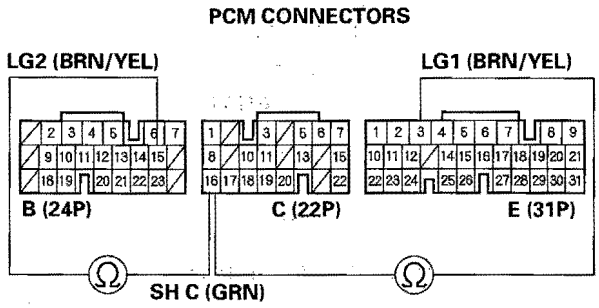

Wire side of female terminals

Is there continuity?

YES—Repair short to ground in the wire between PCM connector terminal C16 and the shift solenoid valve C, then go to step 16.

NO—Go to step 13.

Protected by AP

13. Measure shift solenoid valve C resistance at the solenoid valve connector.

SHIFT SOLENOID VALVE C CONNECTOR

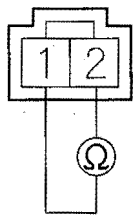

Terminal side of male terminals

Is there 12—25 Ω ?

YES—Go to step 14.

NO—Replace shift solenoid valve C (see page 14-185), then go to step 16.

14. Turn the ignition switch ON (II).

15. Measure the voltage between PCM connector terminals E10 and B15 or E3.

PCM CONNECTORS

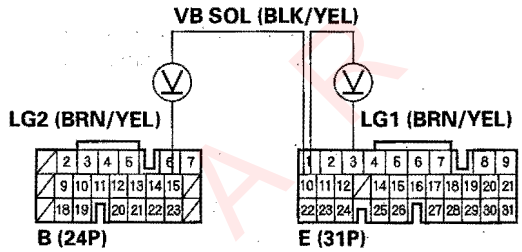

Wire side of female terminals

Is there battery voltage?

YES—Check for loose or poor connections at PCM connector terminal E10. If the connection is OK, update the PCM if it does not have the latest software, or substitute a known-good PCM (see page 14-6), then recheck. If the symptom/indication goes away with a known-good PCM, replace the original PCM. ■

NO—Check for blown No. 18 fuse in the under-dash fuse/relay box. If the fuse is OK, repair open in the wire between PCM connector terminal E10 and the under-dash fuse/relay box, then go to step 16.

16. Clear the DTC with the HDS.

17. Test-drive the vehicle for several minutes in the D position in all five gears.

18. Check the OBD STATUS in DTCs MENU for a pass/fail test of code P0979.

Did the result indicate a pass?

YES—The problem has been corrected. ■

NO—Return to step 1 and recheck. ■

Protected by AR

DTC Troubleshooting (cont'd)

DTC P0980: Open in Shift Solenoid Valve C Circuit

NOTE:
- Record all freeze data and review General Troubleshooting Information (see page 14-3) before you troubleshoot.
- This code is caused by an electrical circuit problem and cannot be caused by a mechanical problem in the transmission.

1. Clear the DTC with the HDS.
2. Test-drive the vehicle for several minutes in the D position in all five gears.
3. Check that DTC P0980 recurs.

   Is DTC P0980 indicated?

   YES—Go to step 7.

   NO—Go to step 4.
4. Select SHIFT SOL TEST in MISCELLANEOUS TEST MENU, then carry out A/T SHIFT SOL C test in SHIFT SOL TEST MENU with the HDS.
5. Test-drive the vehicle for several minutes in the D position in all five gears.
6. Check the OBD STATUS in DTCs MENU for a pass/fail test of code P0980.

   Did the result indicate a fail?

   YES—Go to step 7.

   NO—Intermittent failure, the system is OK at this time. Check for poor connections or loose terminals at shift solenoid valve C and PCM. If the tester indicates NOT COMPLETE, return to step 4 and recheck.■
7. Turn the ignition switch OFF.
8. Jump the SCS line with the HDS.
9. Disconnect PCM connectors B (24P), C (22P), and E (31P).
10. Measure the resistance between PCM connector terminals C16 and B15 or E3.

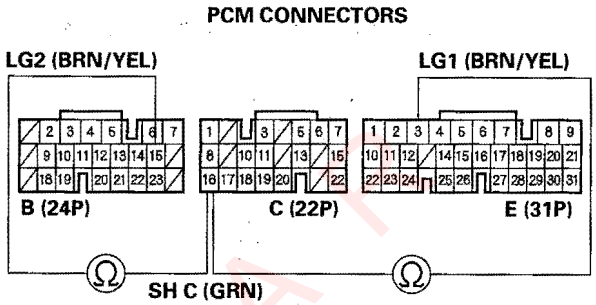

Wire side of female terminals

Is there 12—25 Ω ?

YES—Check for loose or poor connections at PCM connector terminal C16. If the connection is OK, update the PCM if it does not have the latest software, or substitute a known-good PCM (see page 14-6), then recheck. If the symptom/indication goes away with a known-good PCM, replace the original PCM.■

NO—Go to step 11.

11. Disconnect shift solenoid valve C connector.

12. Measure shift solenoid valve C resistance at the solenoid valve connector.

SHIFT SOLENOID VALVE C CONNECTOR

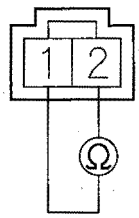

Terminal side of male terminals

Is there 12–25 Ω ?

YES—Go to step 13.

NO—Replace shift solenoid valve C (see page 14-185), then go to step 14.

13. Check for continuity between shift solenoid valve C connector terminal No. 2 and body ground.

SHIFT SOLENOID VALVE C CONNECTOR

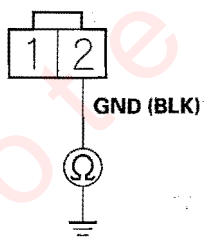

Wire side of female terminals

Is there continuity?

YES—Repair open in the wire between PCM connector terminal C16 and shift solenoid valve C, then go to step 14.

NO—Repair open in the wire between shift solenoid valve C and ground (G151), or repair poor ground (G151), then go to step 14.

14. Clear the DTC with the HDS.

15. Test-drive the vehicle for several minutes in the D position in all five gears.

16. Check the OBD STATUS in DTCs MENU for a pass/fail test of code P0980.

Did the result indicate a pass?

YES—The problem has been corrected. ■

NO—Return to step 1 and recheck. ■

Protected by AR

DTC Troubleshooting (cont'd)

DTC P2769: Short in Torque Converter Clutch Solenoid Valve Circuit

NOTE:
- Record all freeze data and review General Troubleshooting Information (see page 14-3) before you troubleshoot.
- This code is caused by an electrical circuit problem and cannot be caused by a mechanical problem in the transmission.

1. Clear the DTC with the HDS.
2. Start the engine, and warm it up to normal operating temperature (the radiator fan comes on). Test-drive the vehicle for several minutes in the D position in all five gears.
3. Check that DTC P2769 recurs.

   Is DTC P2769 indicated?

   YES—Go to step 7.

   NO—Go to step 4.
4. Select LOCKUP SOL TEST in MISCELLANEOUS TEST MENU, then carry out A/T LOCKUP SOL A test in LOCKUP SOL TEST MENU with the HDS.
5. Start the engine, and warm it up to normal operating temperature (the radiator fan comes on). Test-drive the vehicle for several minutes in the D position in all five gears.
6. Check the OBD STATUS in DTCs MENU for a pass/fail test of code P2769.

   Did the result indicate a fail?

   YES—Go to step 7.

   NO—Intermittent failure, the system is OK at this ti me. Check the YEL wire for an intermittent short to ground between torque converter clutch solenoid valve and PCM. If the tester indicates NOT COMPLETE, return to step 4 and recheck.■
7. Turn the ignition switch OFF.
8. Jump the SCS line with the HDS.
9. Disconnect PCM connectors B (24P), C (22P), and E (31P).
10. Measure the resistance between PCM connector terminals C6 and B15 or E3.

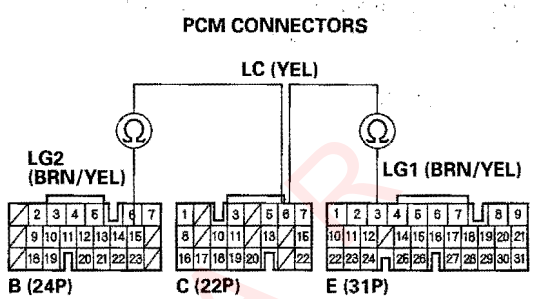

Wire side of female terminals

Is there less than 12 Ω ?

YES—Go to step 11.

NO—Update the PCM if it does not have the latest software, or substitute a known-good PCM (see page 14-6), then recheck. If the symptom/indication goes away with a known-good PCM, replace the original PCM.■

11. Disconnect torque converter clutch solenoid valve connector.
12. Check for continuity between PCM connector terminals C6 and B15 or E3.

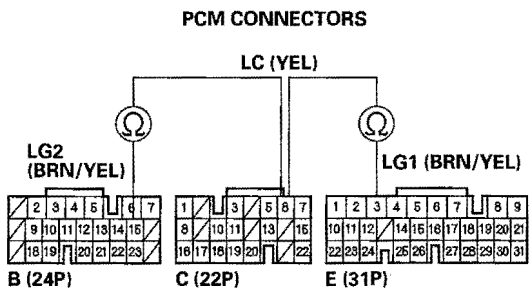

Wire side of female terminals

Is there continuity?

YES—Repair short to ground in the wire between PCM connector terminal C6 and torque converter clutch solenoid valve, then go to step 16.

NO—Go to step 13.

Protected by AR

13. Measure torque converter clutch solenoid valve resistance at the solenoid valve connector.

TORQUE CONVERTER CLUTCH SOLENOID VALVE CONNECTOR

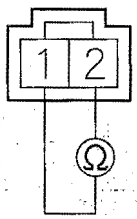

Terminal side of male terminals

Is there 12—25 Ω ?

YES—Go to step 14.

NO—Replace torque converter clutch solenoid valve (see page 14-187), then go to step 16.

14. Turn the ignition switch ON (II).

15. Measure the voltage between PCM connector terminals E10 and B15 or E3.

PCM CONNECTORS

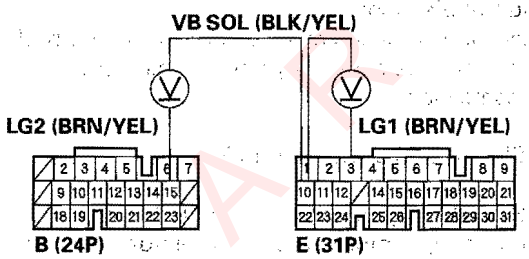

Wire side of female terminals

Is there battery voltage?

YES—Check for loose or poor connections at PCM connector terminal E10. If the connection is OK, update the PCM if it does not have the latest software, or substitute a known-good PCM (see page 14-6), then recheck. If the symptom/indication goes away with a known-good PCM, replace the original PCM. ■

NO—Check for blown No. 18 fuse in the under-dash fuse/relay box. If the fuse is OK, repair open in the wire between PCM connector terminal E10 and the under-dash fuse/relay box, then go to step 16.

16. Clear the DTC with the HDS.

17. Start the engine, and warm it to normal operating temperature (the radiator fan comes on). Test-drive the vehicle for several minutes in the D position in all five gears.

18. Check the OBD STATUS in DTCs MENU for a pass/fail test of code P2769.

Did the result indicate a pass?

YES—The problem has been corrected. ■

NO—Return to step 1 and recheck. ■

Protected by AR

DTC Troubleshooting (cont'd)

DTC P2770: Open in Torque Converter Clutch Solenoid Valve Circuit

NOTE:
- Record all freeze data and review General Troubleshooting Information (see page 14-3) before you troubleshoot.
- This code is caused by an electrical circuit problem and cannot be caused by a mechanical problem in the transmission.

1. Clear the DTC with the HDS.
2. Start the engine, and warm it up to normal operating temperature (the radiator fan comes on). Test-drive the vehicle for several minutes in the D position in all five gears.
3. Check that DTC P2770 recurs.

   Is DTC P2770 indicated?

   YES—Go to step 7.

   NO—Go to step 4.
4. Select LOCKUP SOL TEST in MISCELLANEOUS TEST MENU, then carry out A/T LOCKUP SOL A test in LOCKUP SOL TEST MENU with the HDS.
5. Start the engine, and warm it up to normal operating temperature (the radiator fan comes on). Test-drive the vehicle for several minutes in the D position in all five gears.
6. Check the OBD STATUS in DTCs MENU for a pass/fail test of code P2770.

   Did the result indicate a fail?

   YES—Go to step 7.

   NO—Intermittent failure, the system is OK at this time. Check for poor connections or loose terminals at torque converter clutch solenoid valve and PCM. If the tester indicates NOT COMPLETE, return to step 4 and recheck.■
7. Turn the ignition switch OFF.
8. Jump the SCS line with the HDS.
9. Disconnect PCM connectors B (24P), C (22P), and E (31P).
10. Measure the resistance between PCM connector terminals C6 and B15 or E3.

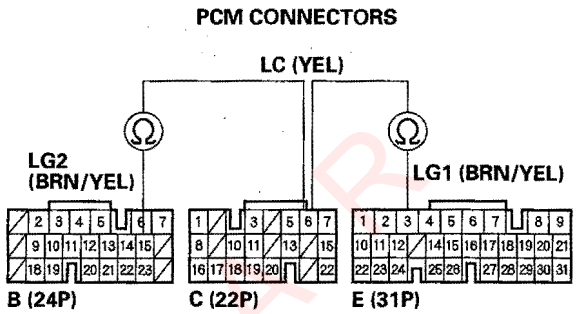

Wire side of female terminals

Is there 12—25 Ω ?

YES—Check for loose or poor connections at PCM connector terminal C6. If the connection is OK, update the PCM if it does not have the latest software, or substitute a known-good PCM (see page 14-6), then recheck. If the symptom/indication goes away with a known-good PCM, replace the original PCM.■

NO—Go to step 11.

Processed by ARR

11. Disconnect torque converter clutch solenoid valve connector.

12. Measure torque converter clutch solenoid valve resistance at the solenoid valve connector.

TORQUE CONVERTER CLUTCH SOLENOID VALVE CONNECTOR

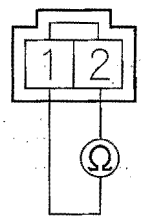

Terminal side of male terminals

Is there 12—25 Ω ?

YES—Go to step 13.

NO—Replace torque converter clutch solenoid valve (see page 14-187), then go to step 14.

13. Check for continuity between torque converter clutch solenoid valve connector terminal No. 2 and body ground.

TORQUE CONVERTER CLUTCH SOLENOID VALVE CONNECTOR

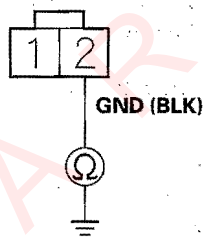

Wire side of female terminals

Is there continuity?

YES—Repair open in the wire between PCM connector terminal C6 and torque converter clutch solenoid valve, then go to step 14.

NO—Repair open in the wire between torque converter clutch solenoid valve and ground (G151), or repair poor ground (G151), then go to step 14.

14. Clear the DTC with the HDS.

15. Start the engine, and warm it to normal operating temperature (the radiator fan comes on). Test-drive the vehicle for several minutes in the D position in all five gears.

16. Check the OBD STATUS in DTCs MENU for a pass/fail test of code P2770.

Did the result indicate a pass?

YES—The problem has been corrected. ■

NO—Return to step 1 and recheck. ■

Protected by AR

Road Test

1. Warm up the engine to normal operating temperature (the radiator fan comes on).
2. Apply the parking brake, and block both rear wheels. Start the engine, then shift to the D position while pressing the brake pedal. Press the accelerator pedal, and release it suddenly. The engine should not stall.
3. Connect the HDS to the DLC (A), and go to the A/T data list.

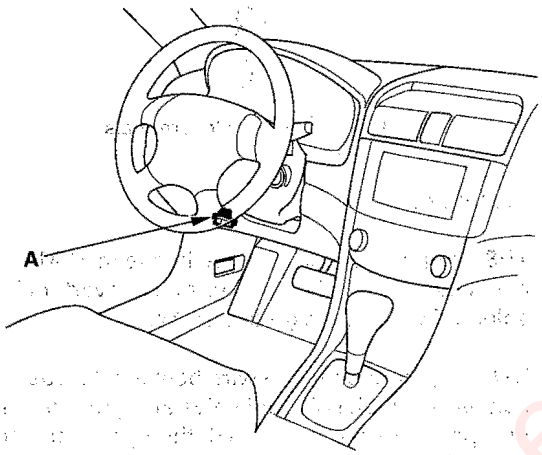

4. Test-drive the vehicle on a flat road in the D position. Check for abnormal noise and clutch slippage. While driving, check that the shift points occur at the proper speeds by monitoring the accelerator pedal position sensor voltage with the HDS and comparing your shift point speeds and voltage to those in the table. (The accelerator pedal position sensor voltage represents the throttle opening.)

Upshift: D position

Accelerator pedal position sensor A voltage: 1.02 V	
1st → 2nd	9—12 mph (14—19 km/h)
2nd → 3rd	19—22 mph (30—35 km/h)
3rd → 4th	30—34 mph (48—54 km/h)
4th → 5th	45—50 mph (73—81 km/h)
Lock-up ON	41—48 mph (66—78 km/h)
Accelerator pedal position sensor A voltage: 2.58 V	
1st → 2nd	23—27 mph (37—44 km/h)
2nd → 3rd	42—47 mph (68—76 km/h)
3rd → 4th	65—71 mph (105—115 km/h)
4th → 5th	90—100 mph (145—161 km/h)
Lock-up ON	91—101 mph (147—163 km/h)
Fully-opened throttle **Accelerator pedal position sensor A voltage: 4.65 V**	
1st → 2nd	36—41 mph (58—66 km/h)
2nd → 3rd	60—68 mph (97—110 km/h)
3rd → 4th	92—103 mph (148—166 km/h)
4th → 5th	———
Lock-up ON	122—134 mph (196—216 km/h)

Protected by R

Downshift: D position

Accelerator pedal position sensor A voltage: 1.02 V	
Lock-up OFF	40—47 mph (65—75 km/h)
5th → 4th	29—34 mph (46—54 km/h)
4th → 3rd	17—19 mph (27—31 km/h)
3rd → 1st	6—9 mph (10—15 km/h)
Accelerator pedal position sensor A voltage: 2.58 V	
Lock-up OFF	76—86 mph (123—138 km/h)
Fully-opened throttle **Accelerator pedal position sensor A voltage: 4.65 V**	
Lock-up OFF	107—117 mph (172—188 km/h)
5th → 4th	143—155 mph (230—250 km/h)
4th → 3rd	79—89 mph (127—143 km/h)
3rd → 2nd	52—58 mph (84—93 km/h)
2nd → 1st	27—30 mph (43—49 km/h)

5. Accelerate to about 35 mph (57 km/h) so the transmission is in 4th or 5th, then shift from the D position to the L position. The vehicle should immediately begin slowing down from engine braking.

6. Check for abnormal noise and clutch slippage in the following positions.

   L (1st Gear and 2nd Gear) Position
   Accelerate from a stop at full throttle. Check that there is no abnormal noise or clutch slippage.

   R (Reverse) Position
   Accelerate from a stop at full throttle, and check for abnormal noise and clutch slippage.

7. Test in P (Park) Position.
   Park the vehicle on a slope (about 16°), apply the brake, and shift into the P position. Release the brake; the vehicle should not move.

   NOTE: Always use the brake to hold the vehicle, when stopped on an incline in gear. Depending on the grade of the incline, the vehicle could roll backwards if the brake is released.

Protected by A P

Stall Speed Test

1. Engage the parking brake, and block all four wheels.
2. Connect the HDS to the DLC (A), and go to the A/T data list.

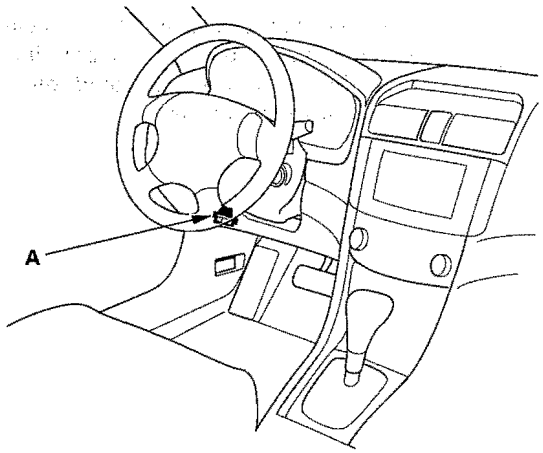

3. Make sure the A/C switch is OFF.
4. After the engine has warmed up to normal operating temperature (the radiator fan comes on), shift to the D position.
5. Fully press the brake pedal and accelerator pedal for 6 to 8 seconds, and note the engine speed. Do not move the shift lever while raising the engine speed.
6. Allow the engine to idle for 2 minutes for cooling, then repeat the test in the L and R positions.

   NOTE:
   - Do not test stall speed for more than 10 seconds at a time.
   - Stall speed tests should be used for diagnostic purposes only.
   - Stall speed should be the same in D, L, and R positions.
   - Do not test stall speed with the A/T pressure gauges installed.

   Stall Speed rpm:
   Specification: 2,000 rpm
   Service Limit: 1,850 – 2,150 rpm

7. If the measurements are out of the service limit, problems and probable causes are listed in the table.

Problem	Probable causes
Stall speed rpm high in the D, L, and R positions	• Low fluid level • ATF pump output low • Clogged ATF strainer • Regulator valve stuck • Slipping clutch
Stall speed rpm high in the R position	Slippage of 5th clutch
Stall speed low in the D, L, and R positions	• Engine output low • Engine throttle valve closed • Torque converter one-way clutch slipping

Protected by A

Pressure Test

Special Tools Required
- A/T clutch pressure gauge set 07406-0020400 or 07406-0020401
- A/T pressure hose, 2,210 mm 07MAJ-PY4011A
- A/T pressure hose adapter 07MAJ-PY40120

1. Before testing, be sure the transmission fluid is filled to the proper level.

2. Lift the vehicle up on a lift or apply the parking brake, block rear wheels, and raise the front of the vehicle. Make sure it is securely supported.

3. Remove the transmission under cover.

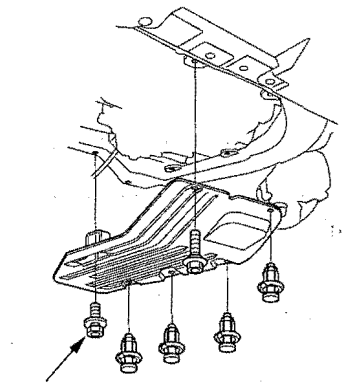

6 x 1.0 mm
12 N·m (1.2 kgf·m, 8.7 lbf·ft)

4. Remove the splash shield.

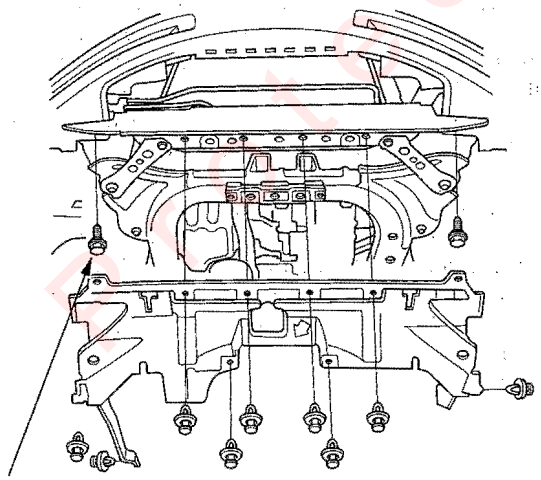

6 x 1.0 mm
12 N·m (1.2 kgf·m, 8.7 lbf·ft)

5. Allow the front wheels to rotate freely.

6. Connect the oil pressure gauges to the line pressure inspection hole (A), 2nd clutch pressure inspection hole (B), and 1st-hold clutch pressure inspection hole (C). Do not allow dust or other foreign particles to enter the holes while connecting the gauges.

A/T OIL PRESSURE GAUGE SET W/PANEL
07406-0020400 or 07406-0020401

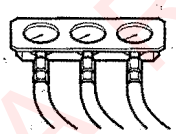

A/T PRESSURE HOSE, 2,210 mm 07MAJ-PY4011A (4 Required)



A/T PRESSURE HOSE ADAPTER 07MAJ-PY40120 (4 Required)

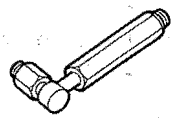

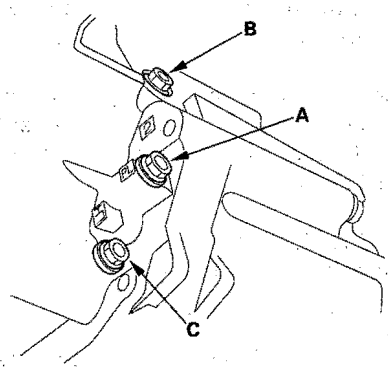

7. Warm up the engine (the radiator fan comes on), then stop it and connect the HDS to the DLC (A).

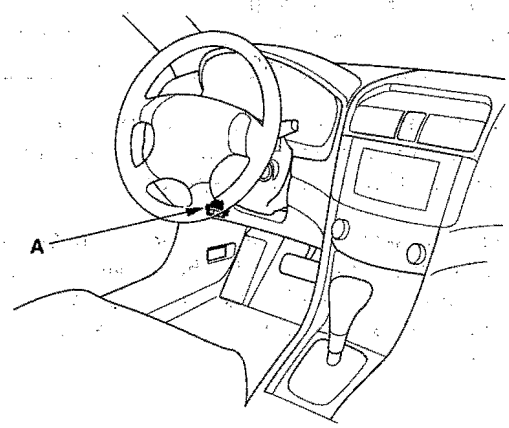

(cont'd)

Pressure Test (cont'd)

8. Start the engine, and run it at 2,000 rpm in the P or N position.

9. Measure line pressure at the line pressure inspection hole (A).

   NOTE: Higher pressure may be indicated if measurements are made in shift lever position other than N or P.

Pressure	Fluid Pressure	
	Standard	Service Limit
Line (A)	900–960 kPa (9.2–9.8 kgf/cm², 130–140 psi)	850 kPa (8.7 kgf/cm², 120 psi)

10. Shift to the L position, and measure 1st-hold clutch pressure at the 1st-hold clutch pressure inspection hole (C) while holding engine speed at 2,000 rpm.

11. Shift to the P position, and press the brake pedal. Keep pressing the brake pedal, and shift to the D position, then release the brake pedal.

12. Press the accelerator very slowly to increase engine speed to 2,000 rpm gradually over 10 seconds (the transmission shifts to 2nd gear), then hold it at 1,500 rpm.

13. Measure 2nd clutch pressure at the 2nd clutch pressure inspection hole (B).

Pressure	Fluid Pressure	
	Standard	Service Limit
1st-hold clutch (C)	760–830 kPa (7.7–8.5 kgf/cm², 110–120 psi)	710 kPa (7.2 kgf/cm², 100 psi)
2nd clutch (B)	890–970 kPa (9.1–9.9 kgf/cm², 130–140 psi)	840 kPa (8.6 kgf/cm², 120 psi)

14. Turn the engine off, then disconnect the oil pressure gauges from the 2nd clutch, 1st-hold clutch, and line pressure inspection holes.

15. Install the sealing bolts to the 2nd clutch, 1st-clutch and line pressure inspection holes with the new sealing washers, and tighten the bolts to 18 N·m (1.8 kgf·m, 13 lbf·ft). Do not reuse old sealing washers.

16. Connect the oil pressure gauges to the 3rd clutch pressure inspection hole (D), 4th clutch pressure inspection hole (E), and 5th clutch pressure inspection hole (F).

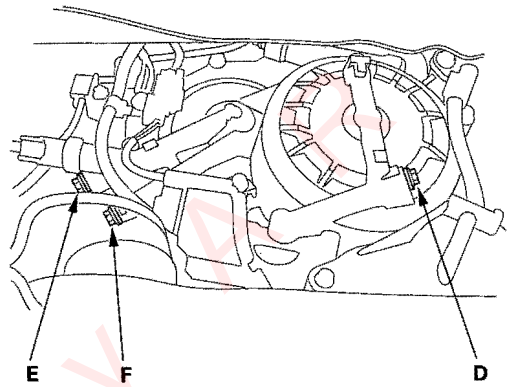

17. Start the engine with the transmission in the P position, and warm up the engine until the radiator fan comes on. With the brake pedal pressed, shift to the D position.

18. Press the accelerator very slowly to increase engine speed to 2,000 rpm gradually over 10 seconds (the transmission shifts to 2nd gear), then hold it at 1,500 rpm.

19. Release the brake pedal, then press the accelerator very slowly to increase engine speed to 2,000 rpm gradually over 10 seconds (the transmission will shift to 3rd, 4th, then 5th gear), and measure 3rd clutch pressure at the 3rd clutch inspection hole (D), 4th clutch pressure at the 4th clutch pressure inspection hole (E), and 5th clutch pressure at the 5 th clutch pressure inspection hole (F).

Pressure	Fluid Pressure	
	Standard	Service Limit
3rd clutch (D) 4th clutch (E) 5th clutch (F)	890–970 kPa (9.1–9.9 kgf/cm², 130–140 psi)	840 kPa (8.6 kgf/cm², 120 psi)

Protected by ARP

20. Bring the engine back to an idle, then apply the brake to stop the wheels from rotating.

21. Shift to the R position, then release the brake pedal. Raise the engine rpm to 2,000 rpm, and measure 5th clutch pressure at the 5th clutch pressure inspection hole (F).

Pressure	Fluid Pressure	
	Standard	Service Limit
5th clutch (F) in R	890—970 kPa (9.1—9.9 kgf/cm², 130—140 psi)	840 kPa (8.6 kgf/cm², 120 psi)

22. Turn the engine off, then disconnect the oil pressure gauges from the 3rd, 4th, and 5th clutch pressure inspection holes.

23. Install the sealing bolts to the 3rd, 4th, and 5th clutch pressure inspection holes with the new sealing washers, and tighten the bolts to 18 N·m (1.8 kgf·m, 13 lbf·ft). Do not reuse old sealing washers.

24. Connect the oil pressure gauges to the 1st clutch pressure inspection hole (G).

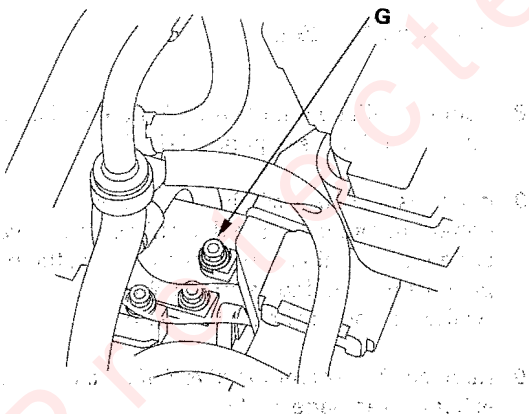

25. Start the engine, and let it warm up until the radiator fan comes on. Then shift to the L position, release the brake pedal, and measure 1st clutch pressure at the 1st clutch pressure inspection hole (G) while holding engine speed at 2,000 rpm.

Pressure	Fluid Pressure	
	Standard	Service Limit
1st clutch (G)	890—970 kPa (9.1—9.9 kgf/cm², 130—140 psi)	840 kPa (8.6 kgf/cm², 120 psi)

26. If the measurements are out of service limit, problems and probable causes are listed in the table.

Problem	Probable causes
No or low line pressure	• Torque converter • ATF pump • Regulator valve • Torque converter check valve • Low fluid level • Clogged ATF strainer
No or low 1st clutch pressure	• 1st clutch • O-rings
No or low 2nd clutch pressure	• 2nd clutch • O-rings
No or low 3rd clutch pressure	• 3rd clutch • O-rings
No or low 4th clutch pressure	• 4th clutch • O-rings
No or low 5th clutch pressure	• 5th clutch • O-rings
No or low 5th clutch pressure in the R position	• Servo valve • 5th clutch • O-rings
No or low 1st-hold clutch pressure	• 1st-hold clutch • O-rings

27. Disconnect the oil pressure gauge from the 1st clutch pressure inspection hole.

28. Install the sealing bolt to the 1st clutch pressure inspection hole with the new sealing washer, and tighten the bolt to 18 N·m (1.8 kgf·m, 13 lbf·ft). Do not reuse old sealing washer.

29. Install the splash shield and transmission under cover.

Protected by A

Shift Solenoid Valve A Test

1. Connect the HDS to the DLC (A).

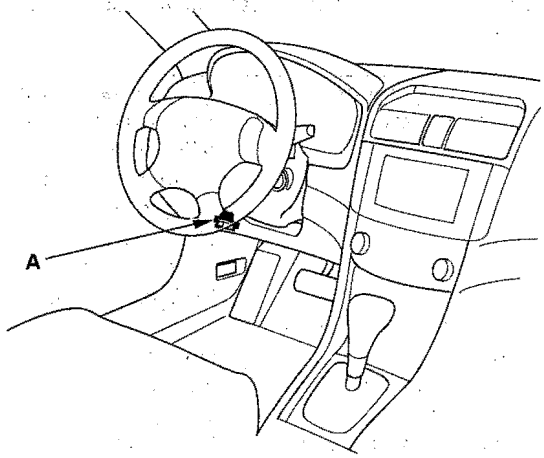

2. Select SHIFT SOL TEST in MISCELLANEOUS TEST MENU on the HDS.
3. Carry out A/T SHIFT SOL A test in SHIFT SOL TEST MENU with the HDS.
4. Shift solenoid valve A test had finished if the test result is OK.
   If no sound is heard, go to step 5.
5. Raise the vehicle, then remove the splash shield.
6. Disconnect the shift solenoid valve A connector and check the connector for good pin fit, corrosion, dirt, and oil. If the connector is OK, go to step 7. If not OK, repair the connector and do the test again.

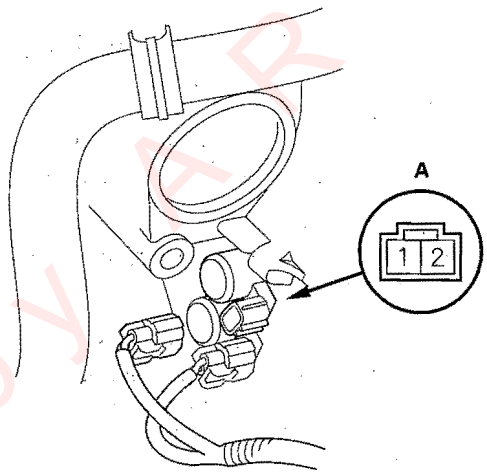

7. Measure shift solenoid valve A resistance at the solenoid valve connector terminals.

   Standard: 12—25 Ω

8. Replace shift solenoid valve A if the resistance is out of standard (see page 14-181).
9. If the resistance is within the standard, connect the battery negative terminal to shift solenoid valve A connector terminal No. 2, and connect the battery positive terminal to terminal No. 1.
   A clicking sound should be heard.
10. Replace shift solenoid valve A if no clicking sound is heard (see page 14-181).
11. If a clicking sound is heard, check the BLU/YEL wire between the PCM and shift solenoid valve A for short or open. If the wire is OK, substitue a known-good PCM and retest.

Protected by AR

Shift Solenoid Valve A Replacement

1. Make sure you have the customer's radio and navigation anti-theft codes, and write down the XM radio channel presets.
2. Remove the left side engine compartment cover.
3. Make sure the ignition switch is OFF. Disconnect the battery negative terminal, then disconnect the battery positive terminal.
4. Remove the battery hold-down bracket, then remove the battery and battery tray.
5. Remove the air intake cover and air intake tube.
6. Remove the intake air duct and air cleaner housing.
7. Remove the two bolts securing the battery base from under the vehicle, and remove the two bolts securing the battery base in the engine compartment, then remove the battery base.
8. Remove the starter.
9. Disconnect shift solenoid valve A connector, and remove shift solenoid valve A .

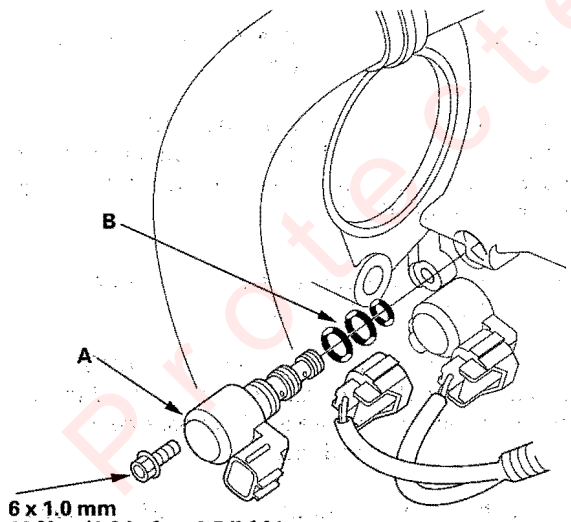

10. Install a new shift solenoid valve A with new O-rings (B). While installing the solenoid valve, do not allow dust or other foreign particles to enter the transmission.
11. Check the connector for corrosion, dirt, and oil, then connect the connector.
12. Install the starter.
13. Install the battery base, then install the air cleaner housing and intake air duct.
14. Install the air intake cover and air intake tube.
15. Install the battery tray, battery, and battery hold-down bracket then connect battery terminals.
16. Install the left side engine compartment cover.
17. Enter the radio and navigation anti-theft codes, and set the XM radio channel presets and the clock.

Protected by AP

Shift Solenoid Valve B Test

1. Connect the HDS to the DLC (A).

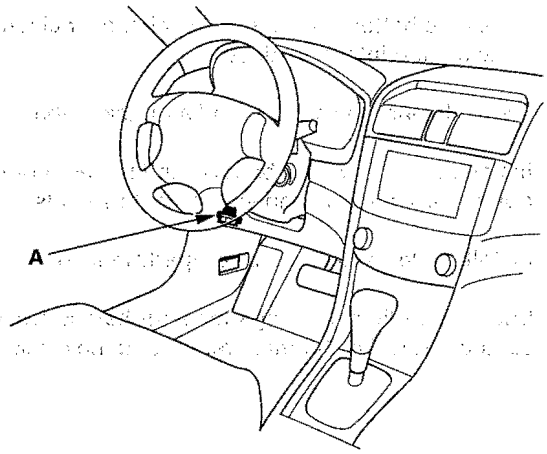

2. Select SHIFT SOL TEST in MISCELLANEOUS TEST MENU on the HDS.
3. Carry out A/T SHIFT SOL B test in SHIFT SOL TEST MENU with the HDS.
4. Shift solenoid valve B test is finished if the test result is OK.
   If no sound is heard, remove shift solenoid valve B, and test the solenoid valve.
5. Remove the intake air duct and air cleaner housing.
6. Disconnect shift solenoid valve B connector, and check the connector for good pin fit, corrosion, dirt, and oil. If the connector is OK, go to step 7. If the connector is not OK, repair the connector and do the test again.

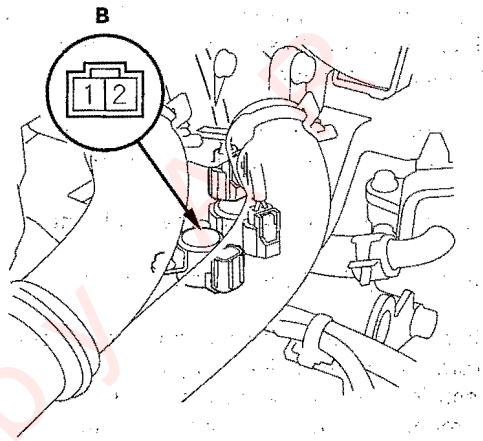

7. Measure shift solenoid valve B resistance at the solenoid valve connector terminals.

   Standard: 12—25 Ω

8. Replace shift solenoid valve B if the resistance is out of standard (see page 14-183).
9. If the resistance is within the standard, connect the battery negative terminal to shift solenoid valve B connector terminal No. 2, and connect the battery positive terminal to the terminal No. 1.
10. Replace shift solenoid valve B if no clicking sound is heard (see page 14-183).
11. If a clicking sound is heard, check the GRN/WHT wire from the PCM to shift solenoid valve B for a short or open. If the wire is OK, substitute a known-good PCM and retest.
12. Install the air cleaner housing and intake air duct.

Protected by

Shift Solenoid Valve B Replacement

1. Remove the intake manifold cover.
2. Disconnect shift solenoid valve B connector, and remove shift solenoid valve B.

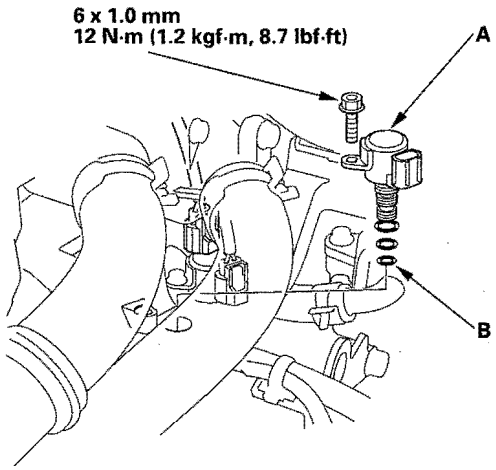

3. Install a new shift solenoid valve B with new O-rings (A). While installing the solenoid valve, do not allow dust or other foreign particles to enter the transmission.
4. Check the connector for corrosion, dirt, and oil, then connect the connector.
5. Install the intake manifold cover.

Protected by AR

Shift Solenoid Valve C Test

1. Connect the HDS to the DLC (A).

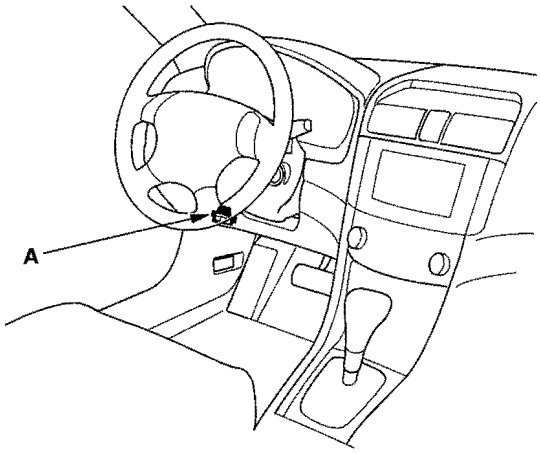

2. Select shift SOL TEST in MISCELLANEOUS TEST MENU on the HDS.
3. Carry out A/T SHIFT SOL C test in SHIFT SOL TEST MENU with the HDS.
4. Shift solenoid valve C test is finished if a clicking noise is heard.
   If no sound is heard, got to step 5.
5. Raise the vehicle, then remove the splash shield.
6. Disconnect the shift solenoid valve C connector and check the connector for good pin fit, corrosion, dirt, and oil. If the connector is OK, go to step 7. If the connector is not OK, repair the connector and do the test again.

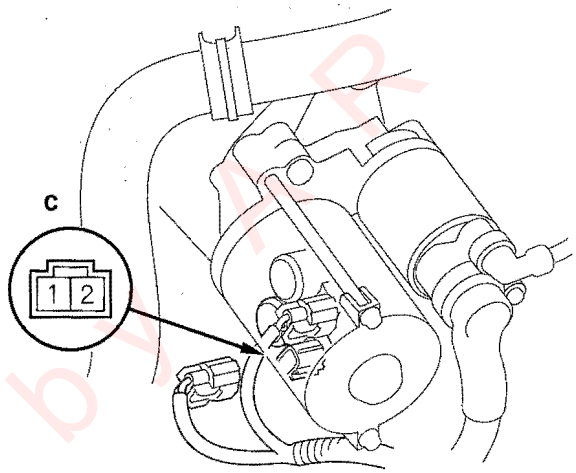

7. Measure shift solenoid valve C resistance at the solenoid valve connector terminals.

   Standard: 12—25 Ω

8. Replace shift solenoid valve C if the resistance is out of standard (see page 14-185).
9. If the resistance is within the standard, connect the battery negative terminal to shift solenoid valve C connector terminal No. 2, and connect the battery positive terminal to the terminal No. 1.
10. Replace shift solenoid valve C if no clicking sound is heard (see page 14-185).
11. If a clicking sound is heard, the solenoid is OK. Check the GRN wire from the PCM to shift soilenoid valve C for short or open. If the wire is OK, substitute a known-good PCM and retest.

Protected by FSR

Shift Solenoid Valve C Replacement

1. Disconnect shift solenoid valve C connector, and remove shift solenoid valve C .

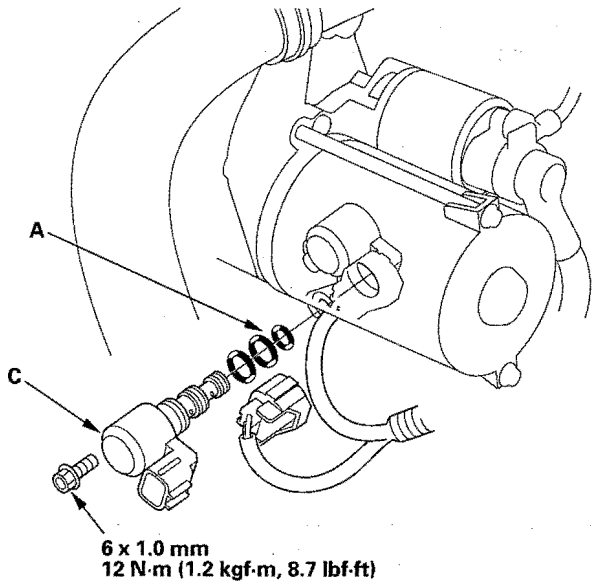

2. Install a new shift solenoid valve C with new O-rings (A). While installing the solenoid valve, do not allow dust or other foreign particles to enter the transmission.

3. Check the connector for corrosion, dirt, and oil, then connect the connector.

Protected by AR

Torque Converter Clutch Solenoid Valve Test

1. Connect the HDS to the DLC (A).

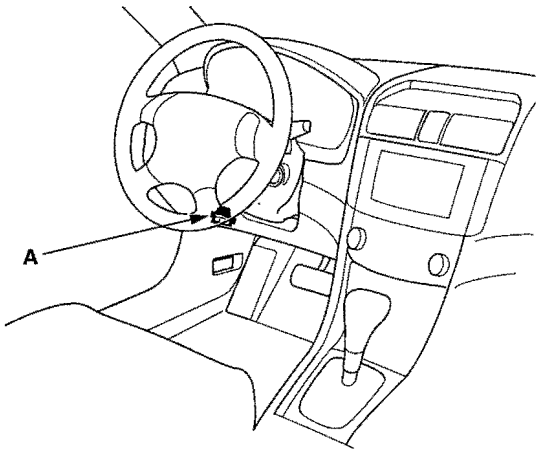

2. Select LOCKUP SOL TEST in MISCELLANEOUS TEST MENU on the HDS.

3. Carry out A/T LOCKUP SOL A test in LOCKUP SOL TEST MENU with the HDS.

4. Torque converter clutch solenoid valve test has finished if the test result is OK.
   If no sound is heard, go to step 5.

5. Disconnect torque converter clutch solenoid valve connector, and check the connector for good pin fit, corrosion, dirt, and oil. If the connector is OK, go to step 6. If the connector is not OK, repair the connector and do the test again.

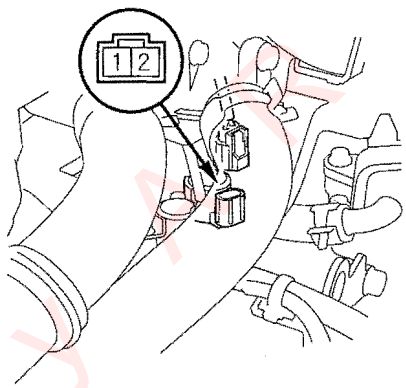

6. Measure torque converter clutch solenoid valve resistance at the solenoid valve connector terminals.

   Standard: 12—25 Ω

7. Replace torque converter clutch solenoid valve if no resistance is out of standard (see page 14-187).

8. If the resistance is within the standard, connect the battery negative terminal to torque converter clutch solenoid valve connector terminal No. 2, and connect the battery positive terminal to the terminal No. 1.

9. Replace torque converter clutch solenoid valve if no clicking sound is heard (see page 14-187).

10. If a clicking sound is heard, the solenoid is OK. Check the YEL wire from the PCM to the torque converter clutch solenoid valve for a short or open. If the wire is OK, substitute a known-good PCM and retest.

Protected by ATR

Torque Converter Clutch Solenoid Valve Replacement

1. Remove the intake manifold cover.
2. Disconnect torque converter clutch solenoid valve connector, and remove torque converter clutch solenoid valve (A).

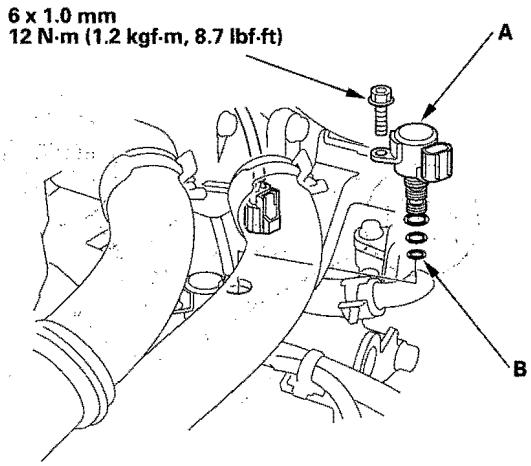

3. Install a new torque converter clutch solenoid valve with new O-rings (B). While installing the solenoid valve, do not allow dust or other foreign particles to enter the transmission.
4. Check connector for corrosion, dirt, and oil, then connect the connector.
5. Install the intake manifold cover.

Protected by A R

A/T Clutch Pressure Control Solenoid Valve A and B Test

1. Connect the HDS to the DLC (A).

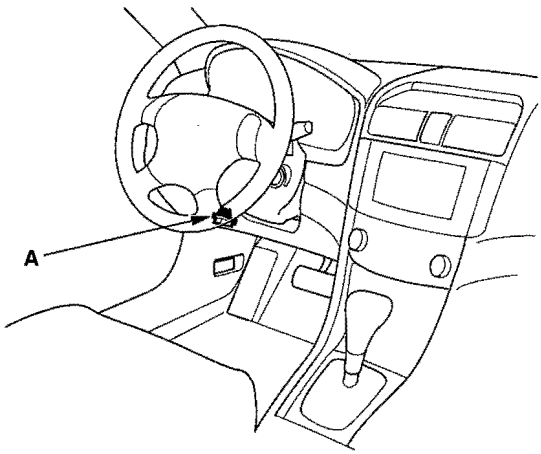

2. Select LINEAR SOL TEST in MISCELLANEOUS TEST MENU on the HDS.
3. Do the LINEAR SOL A TEST and LINEAR SOL B TEST in LINEAR SOL TEST MENU with the HDS.
4. Follow instructions indicated on the HDS by the tester result. A/T clutch pressure control solenoid valve A and B tests have finished if the test results are OK.
   If the tester has not determined the cause of LINEAR SOL TEST, go to step 5.
5. Make sure you have the customer's radio and navigation anti-theft codes, and write down the XM radio channel presets.
6. Remove the left side engine compartment cover.
7. Make sure the ignition switch is OFF. Disconnect the battery negative terminal, then disconnect the battery positive terminal.
8. Remove the battery hold-down bracket, then remove the battery and battery tray.
9. Remove the intake air duct and air cleaner housing.
10. Disconnect A/T clutch pressure control solenoid valve A connector and solenoid valve B connector, and check the connector for pin fit, corrosion, dirt, and oil. If the connectors are OK, go to step 11. If the connectors are not OK, repair the connectors and do the test again.

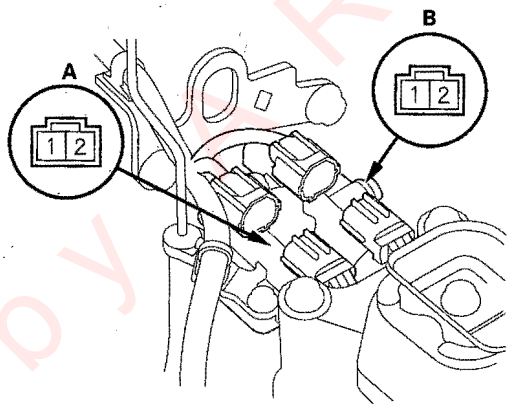

11. Measure A/T clutch pressure control solenoid valve A and B resistances at each solenoid valve connector.

    Standard: 3—10 Ω

12. If the resistance of either solenoid valve is out of standard, replace A/T clutch pressure control solenoid valve A and B (see page 14-191).
13. If the resistance is within the standard, connect the battery negative terminal to A/T clutch pressure control solenoid valve A and B connector terminal No. 2, and connect the battery positive terminal to the terminal No. 1.
    A clicking sound should be heard.
14. If no sound is heard, replace A/T clutch pressure control solenoid valve A and B (see page 14-191).
    If a clicking sound is heard, go to step 15.

Protected by ...R

15. Remove the transmission upper mount bracket (A) and bracket plate (B).

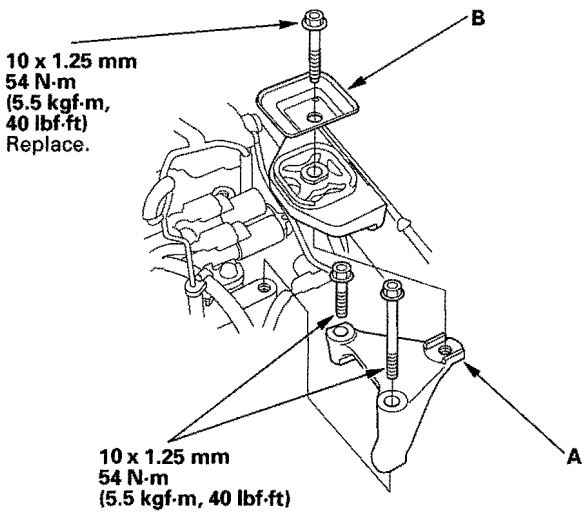

16. Remove the bolt securing the harness clamp bracket (C). Then remove the remaining bolts and the A/T clutch pressure control solenoid valve A and B.

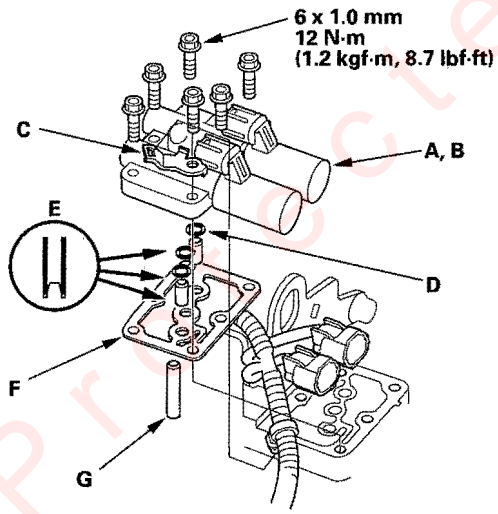

17. Remove the O-rings (D), 8 x 18 mm ATF feed pipes (E), gasket (F), and 8 x 40 mm ATF feed pipe (G).

18. Connect the battery negative terminal to A/T clutch pressure control solenoid valve A and B connector terminal No. 2, and connect the battery positive terminal to the terminal No. 1. Make sure A/T clutch pressure control solenoid valve A and B move.

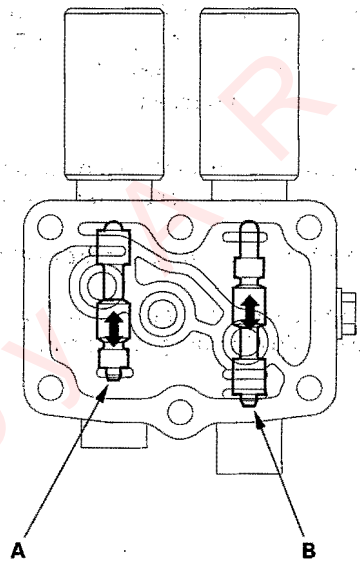

19. Disconnect one of the battery terminals and check valve movement at the fluid passage in the valve body mounting surface.

20. If either valve binds or moves sluggishly, or if the solenoid valve does not operate, replace A/T clutch pressure control solenoid valve A and B.

21. Check the fluid passage of the A/T clutch pressure control solenoid valve for dust and dirt, and clean the passage if necessary.

22. Place a new gasket on the transmission housing, then install the 8 x 18 mm ATF feed pipes with their filter side into the transmission housing.

23. Install new O-rings over the feed pipes, and install the 8 x 40 mm ATF feed pipe.

24. Install the A/T clutch pressure control solenoid valve A and B, connectors, and harness clamp bracket.

(cont'd)

Protected by

A/T Clutch Pressure Control Solenoid Valve A and B Test (cont'd)

25. Install the transmission upper mount bracket and bracket plate.
26. Install the air cleaner housing and intake air duct.
27. Check the wires from the PCM to the clutch pressure control solenoid valve A and B for a short or open. If the wires are OK, substitute a known-good PCM and retest.
28. Install the battery tray, battery, and battery hold-down bracket, then connect battery terminals.
29. Install the left side engine compartment cover.
30. Enter the radio and navigation anti-theft codes, and set the XM radio channel presets and the clock.

Protected by A R

A/T Clutch Pressure Control Solenoid Valve A and B Replacement

1. Make sure you have the customer's radio and navigation anti-theft codes, and write down the XM radio channel presets.
2. Remove the left side engine compartment cover.
3. Make sure the ignition switch is OFF. Disconnect the battery negative terminal, then disconnect the battery positive terminal.
4. Remove the battery hold-down bracket, then remove the battery and battery tray.
5. Remove the intake air duct and air cleaner housing.
6. Remove the transmission upper mount bracket (A) and bracket plate (B).

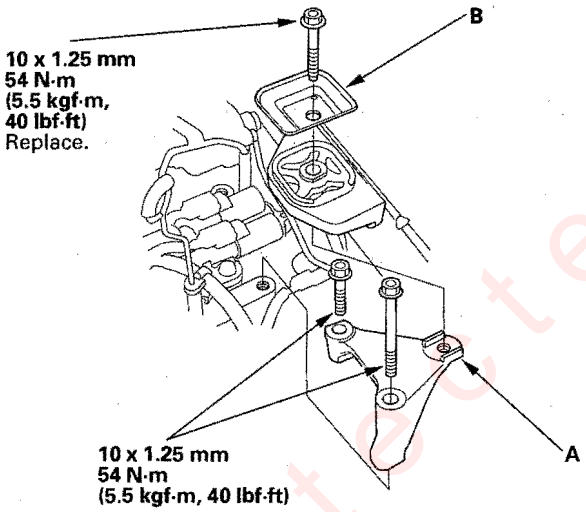

7. Remove the bolt securing the harness clamp bracket (C). Then remove the remaining bolts and A/T clutch pressure control solenoid valve A and B.

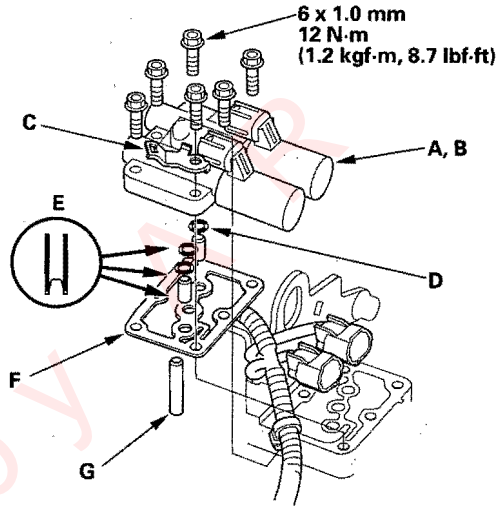

8. Remove A/T clutch pressure control solenoid valve A and B, O-rings (D), 8 x 8 mm ATF feed pipes (E), gasket (F), and 8 x 40 mm ATF feed pipe (G).
9. Place a new gasket on the transmission housing, then install the 8 x 18 mm ATF feed pipes with their filter side into the transmission housing.
10. Install new O-rings over the feed pipes, and install the 8 x 40 mm ATF feed pipe.
11. Install the new A/T clutch pressure control solenoid valve A and B, and harness clamp.
12. Check the A/T clutch pressure control solenoid valve A and B connectors for corrosion, dirt, and oil, then connect them securely.
13. Install the transmission upper mount bracket and bracket plate.
14. Install the air cleaner housing and intake air duct.
15. Install the battery tray, battery, and battery hold-down bracket, then connect battery terminals.
16. Install the left side engine compartment cover.
17. Enter the radio and navigation anti-theft codes, and set the XM radio channel presets and the clock.

Protected by

A/T Clutch Pressure Control Solenoid Valve C Test

1. Connect the HDS to the DLC (A).

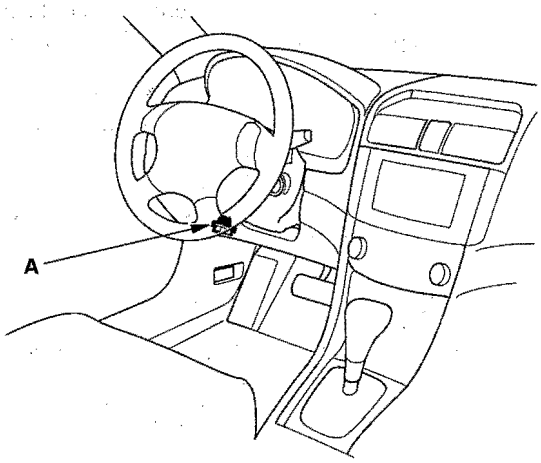

2. Select LINEAR SOL TEST in MISCELLANEOUS TEST MENU on the HDS.
3. Do the LINEAR SOL C TEST in LINEAR SOL TEST MENU with the HDS.
4. Follow instructions indicated on the HDS by the tester result. A/T clutch pressure control solenoid valve C test has finished if the test result is OK. If the tester has not determined the cause of LINEAR SOL TEST, go to step 5.
5. Make sure you have the customer's radio and navigation anti-theft codes, and write down the XM radio channel presets.
6. Remove the left side engine compartment cover.
7. Make sure the ignition switch is OFF. Disconnect the battery negative terminal, then disconnect the battery positive terminal.
8. Remove the battery hold-down bracket, then remove the battery and battery tray.
9. Remove the air intake cover and air intake tube.
10. Remove the splash shield.
11. Remove the two bolts securing the battery base from under the vehicle, and remove the two bolts securing the battery base in the engine compartment, then remove the battery base.
12. Disconnect A/T clutch pressure control solenoid valve C connector, and check the connector for pin fit, corrosion, dirt, and oil. If the connector is OK, go to step 13. If the connector is not OK, repair the connector and do the test again.

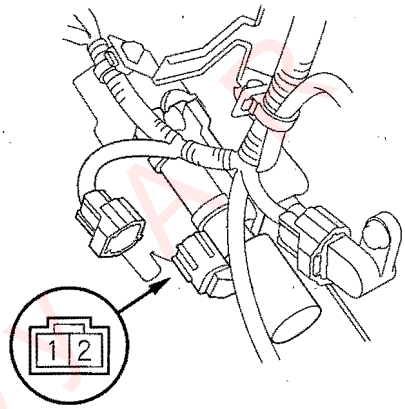

13. Measure A/T clutch pressure control solenoid valve C resistance at the solenoid valve connector.

    Standard: 3—10 Ω

14. If the resistance of the solenoid valve is out of standard, replace A/T clutch pressure control solenoid valve C (see page 14-194).
15. If the resistance is within the standard, connect the battery negative terminal to A/T clutch pressure control solenoid valve C connector terminal No. 2, and connect the battery positive terminal to the terminal No. 1.
    A clicking sound should be heard.
16. If no sound is heard, replace A/T clutch pressure control solenoid valve C (see page 14-194). If a clicking sound is heard, go to step 17.

Protected by AR

17. Remove A/T clutch pressure control solenoid valve C.

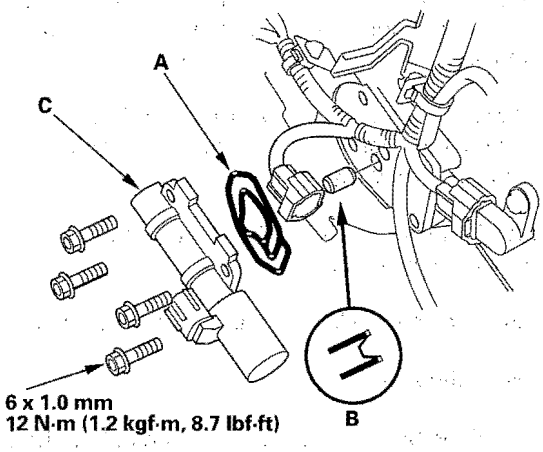

18. Remove the gasket (A) and 8 x 12 mm ATF feed pipe (B).

19. Connect the battery negative terminal to A/T clutch pressure control solenoid valve C connector terminal No. 2, and connect the battery positive terminal to the terminal No. 1. Make sure A/T clutch pressure control solenoid valve C moves.

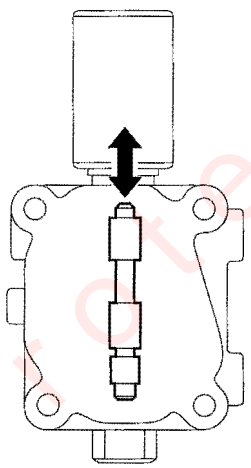

20. Disconnect one of the battery terminals and check valve movement at the fluid passage in the valve body mounting surface.

21. If the valve binds or moves sluggishly, or if the solenoid valve does not operate, replace A/T clutch pressure control solenoid valve C.

22. Check the fluid passage of the A/T clutch pressure control solenoid valve for dust and dirt, and clean the passage if necessary.

23. Install the 8 x 12 mm ATF feed pipe with its filter side into the transmission housing.

24. Install the new gasket in the mounting groove of the A/T clutch pressure control solenoid valve C body properly, then install A/T clutch pressure control solenoid valve C on the transmission housing. Do not pinch the gasket.

25. Install the battery base, then install the air cleaner housing and intake air duct.

26. Install the air intake cover and air intake tube.

27. Install the splash shield.

28. Install the battery tray, battery, and battery hold-down bracket, then connect battery terminals.

29. Install the left side engine compartment cover.

30. Enter the radio and navigation anti-theft codes, and set the XM radio channel presets and the clock.

Protected by AP

A/T Clutch Pressure Control Solenoid Valve C Replacement

1. Make sure you have the customer's radio and navigation anti-theft codes, and write down the XM radio channel presets.
2. Remove the left side engine compartment cover.
3. Make sure the ignition switch is OFF. Disconnect the battery negative terminal, then disconnect the battery positive terminal.
4. Remove the battery hold-down bracket, then remove the battery and battery tray.
5. Remove the air intake cover and air intake tube.
6. Remove the splash shield.
7. Remove the two bolts securing the battery base from under the vehicle, and remove the two bolts securing the battery base in the engine compartment, then remove the battery base.
8. Disconnect A/T clutch pressure control solenoid valve C connector.
9. Remove A/T clutch pressure control solenoid valve C.

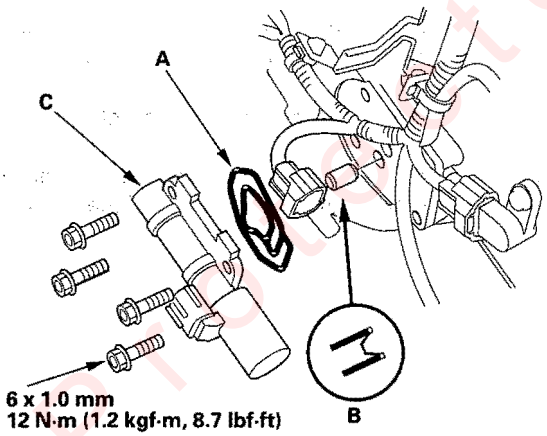

10. Remove the gasket (A) and 8 x 12 mm ATF feed pipe (B).
11. Check the fluid passage of the A/T clutch pressure control solenoid valve for dust and dirt, and clean the passage if necessary.
12. Install the 8 x 12 mm ATF feed pipe with its filter side into the transmission housing.
13. Install the new gasket in the mounting groove of the A/T clutch pressure control solenoid valve C body properly, then install A/T clutch pressure control solenoid valve C on the transmission housing. Do not pinch the gasket.
14. Check the A/T clutch pressure control solenoid valve C connector for corrosion, dirt, and oil, then connect it securely.
15. Install the battery base, then install the air cleaner housing and intake air duct.
16. Install the air intake cover and air intake tube.
17. Install the splash shield.
18. Install the battery, tray, battery, and battery hold-down bracket, then connect battery terminals.
19. Install the left side engine compartment cover.
20. Enter the radio and navigation anti-theft codes, and set the XM radio channel presets and the clock.

Protected by AR

Input Shaft (Mainshaft) Speed Sensor Replacement

1. Raise the vehicle on a lift.
2. Remove the splash shield.
3. Disconnect input shaft (mainshaft) speed sensor connector.
4. Remove the bolt securing the input shaft (mainshaft) speed sensor, then remove the input shaft (mainshaft) speed sensor (A) from the end cover.

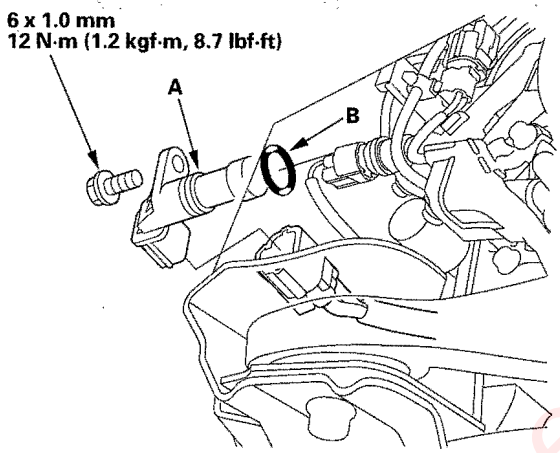

5. Install the new O-ring (B) on the input shaft (mainshaft) speed sensor, then install the input shaft (mainshaft) speed sensor in the end cover. Do not allow dust or foreign particles to enter the transmission.
6. Check the connector for corrosion, dirt, and oil, then connect the connector securely.
7. Install the splash shield.

Protected by AR

Output Shaft (Countershaft) Speed Sensor Replacement

1. Make sure you have the customer's radio and navigation anti-theft codes, and write down the XM radio channel presets.
2. Remove the left side engine compartment cover.
3. Make sure the ignition switch is OFF. Remove the battery negative terminal, then remove the battery positive terminal.
4. Remove the battery hold-down bracket, then remove the battery and battery tray.
5. Remove the intake air duct and air cleaner housing.
6. Disconnect output shaft (countershaft) speed sensor connector.
7. Remove the bolt securing the output shaft (countershaft) speed sensor (A) from the transmission housing.

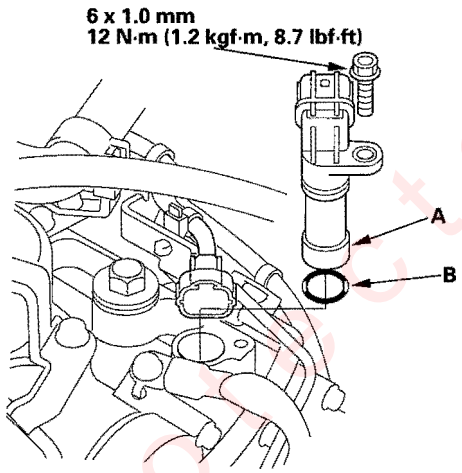

8. Install the new O-ring (B) on the output shaft (countershaft) speed sensor, then install the output shaft (countershaft) speed sensor in the transmission housing. Do not allow dust or foreign particles to enter the transmission.
9. Check for corrosion, dirt, and oil, then connect the connector securely.
10. Install the intake air duct and air cleaner housing.
11. Install the battery tray, battery, and battery hold-down bracket, then connect battery terminals.
12. Install the left side engine compartment cover.
13. Enter the radio and navigation anti-theft codes, and set the XM radio channel presets and the clock.

Corrected by AR

3rd Clutch Transmission Fluid Pressure Switch Replacement

1. Lift the vehicle up on a lift or apply the parking brake, block rear wheels, and raise the front of the vehicle. Make sure it is securely supported.

2. Remove the splash shield.

3. Disconnect the ATF temperature sensor connector (A), and remove it from its bracket.

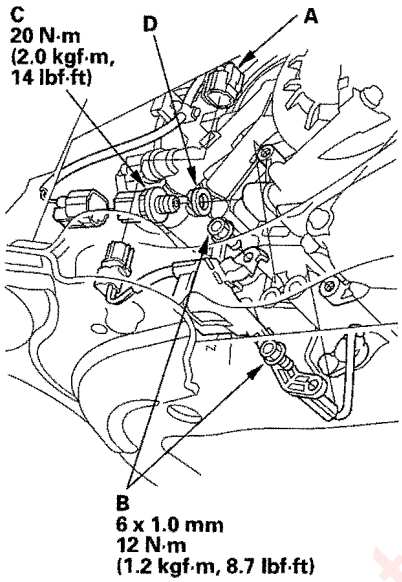

4. Remove ATF temperature sensor harness clamp bolts (B).

5. Disconnect the connector from the 3rd clutch transmission fluid pressure switch (C).

6. Remove the switch, then install a new one with a new sealing washer (D). Do not tighten the switch using the plastic connector.

7. Check the connector for water, corrosion, dust, and oil, then connect the connector securely.

8. Install ATF temperature sensor harness clamp bolt, and connect the ATF temperature sensor connector.

9. Install the splash shield.

Protected by AR

4th Clutch Transmission Fluid Pressure Switch Replacement

1. Raise the vehicle on a lift.
2. Remove the splash shield.
3. Disconnect the connector from the 4th clutch transmission fluid pressure switch (A).

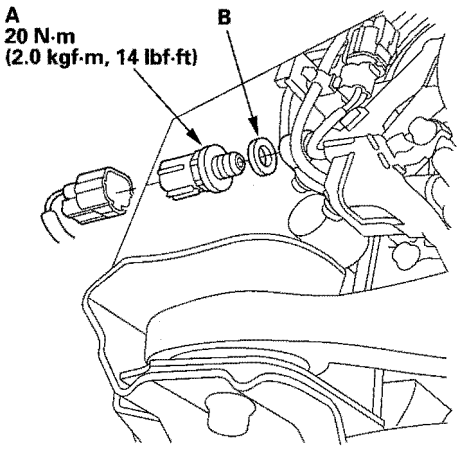

4. Remove the switch, then install a new one with a new sealing washer (B). Do not tighten the switch using the plastic connector.
5. Check the connector for water, corrosion, dust, and oil, then connect the connector securely.
6. Install the splash shield.

Protected by AR

ATF Temperature Sensor Replacement

1. Make sure you have the customer's radio and navigation anti-theft codes, and write down the XM radio channel presets.
2. Remove the left side engine compartment cover.
3. Make sure the ignition switch is OFF. Disconnect the battery negative terminal, then disconnect the battery positive terminal.
4. Remove the battery hold-down bracket, then remove the battery and battery tray.
5. Remove the intake air duct and air cleaner housing.
6. Remove the transmission upper mount bracket (A) and bracket plate (B).

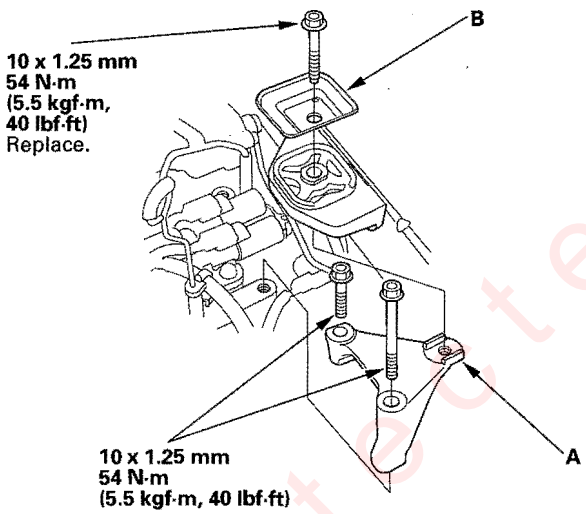

7. Raise the vehicle on a lift.
8. Remove the transmission under cover.

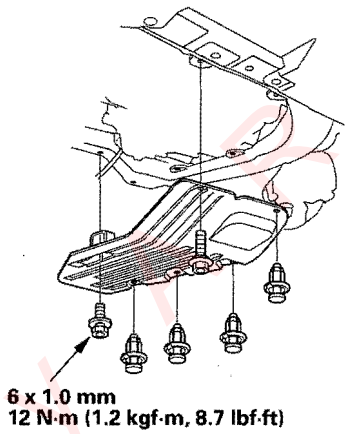

9. Remove the splash shield.

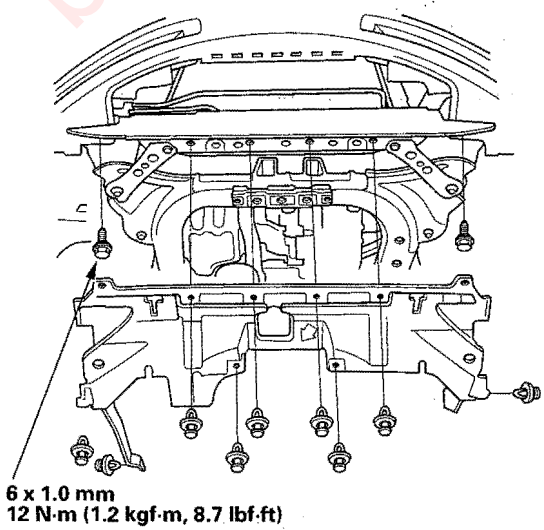

(cont'd)

Protected by

ATF Temperature Sensor Replacement (cont'd)

10. Remove the drain plug (A), and drain the automatic transmission fluid (ATF).

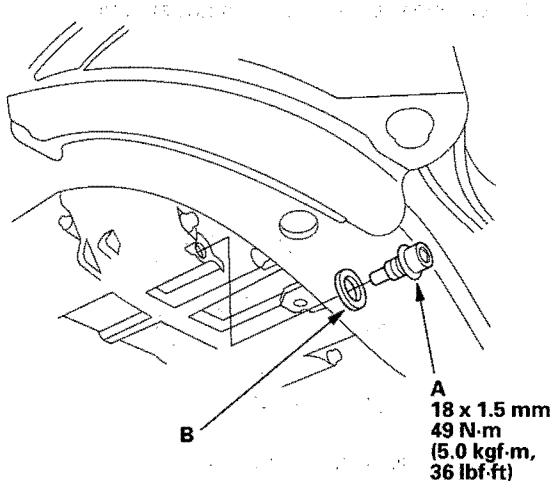

11. Reinstall the drain plug with the new sealing washer (B).

12. Remove the transmission lower mount nuts.

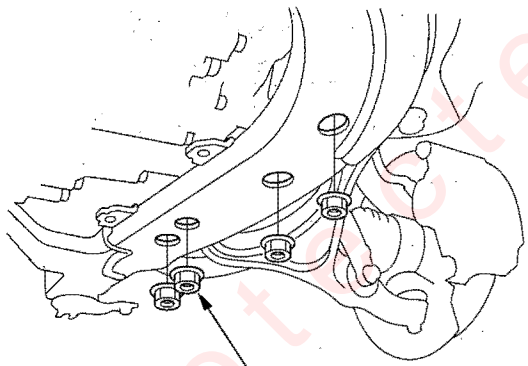

13. Lift the transmission up using a transmission jack to create clearance between the transmission and front subframe.

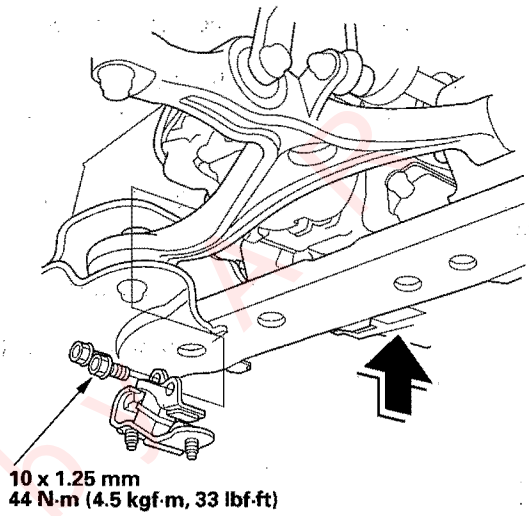

14. Remove the transmission lower front mount.

Protected by AP

15. Disconnect the ATF temperature sensor connector (A), and remove it from the bracket.

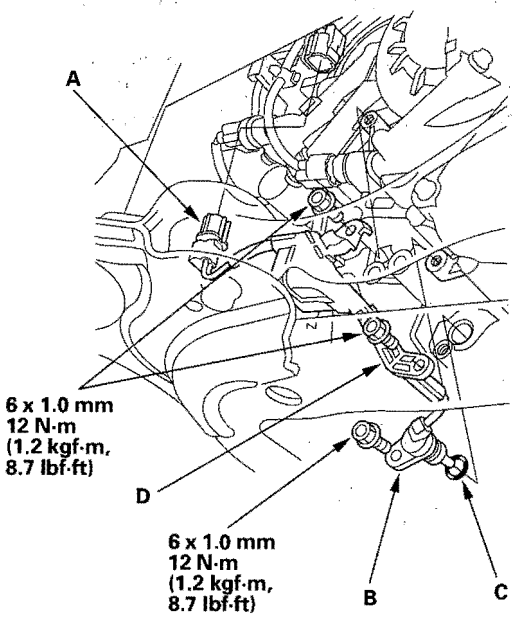

16. Remove the three bolts securing the ATF temperature sensor/harness, then remove the ATF temperature sensor (B).

17. Install the new O-ring (C) on the new ATF temperature sensor, then install the sensor.

18. Install the ATF temperature sensor harness (D) with the bolts.

19. Check the connector for corrosion, dirt, and oil, then connect the connector securely.

20. Install the transmission lower front mount.

21. Lower the transmission onto the front subframe.

22. Install the transmission lower mount nuts.

23. Install the splash shield and transmission under cover.

24. Lower the vehicle.

25. Install the transmission upper mount bracket, bracket plate, and remove the transmission jack.

26. Refill the transmission with ATF (see step 5 on page 14-204).

27. Install the air cleaner housing and intake air duct.

28. Install the left side engine compartment cover.

29. Enter the radio and navigation anti-theft codes, and set the XM radio channel presets and the clock.

Protected by A R

Transmission Gear Selection Switch Test

1. Remove the center console (see page 20-77).
2. Disconnect transmission gear selection switch/park pin switch connector.

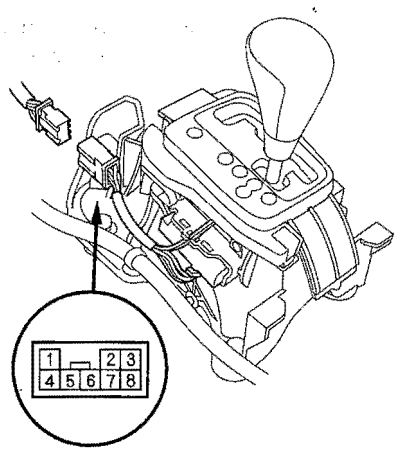

Terminal side of male terminals

3. Check for continuity between connector terminals No. 3 and No. 2.
   There should be continuity when shift lever in M position, and no continuity when shift lever in any position other than M.
4. Check for continuity between connector terminals No. 7 and No. 2.
   There should be continuity when shift lever pushed toward to upshift position (+), and no continuity with released shift lever to neutral position.
5. Check for continuity between connector terminals No. 8 and No. 2.
   There should be continuity when shift lever pulled toward to downshift position (−), and no continuity with released shift lever to neutral position.
6. Replace the transmission gear selection switch/park pin switch assembly if the switch test was failed.
7. Install the center console (see page 20-77).

Transmission Gear Selection Switch Replacement

1. Remove the center console (see page 20-77).
2. Disconnect transmission gear selection switch/park pin switch connector (A), then remove the connector from the shift lever bracket base.

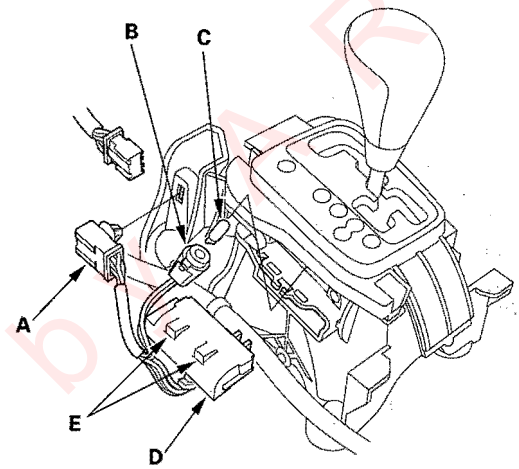

3. Remove the A/T gear position indicator panel light bulb socket (B), then remove the bulb (C) from the socket.
4. Remove the transmission gear selection switch/park pin switch (D) by releasing the lock tabs (E).
5. Install the new switch assembly in the shift lever bracket base.
6. Install the bulb in the socket, then install the socket in the bracket base.
7. Install the switch connector on the bracket base, then connect the connector.
8. Install the center console (see page 20-77).

Protected by KAR

ATF Level Check

NOTE: Keep all foreign particles out of the transmission.

1. Warm up the engine to normal operating temperature (the radiator fan comes on).
2. Park the vehicle on level ground, and turn the engine off.

   NOTE: Check the fluid level within 60—90 seconds after turning the engine off.

3. Remove the dipstick (yellow loop) from the ATF dipstick guide pipe, and wipe it with a clean cloth.
4. Install the dipstick (A) with the arrow (B) on the cap (C) pointing to the front of the vehicle, and aligning the notch on the cap with the guide tab (D).

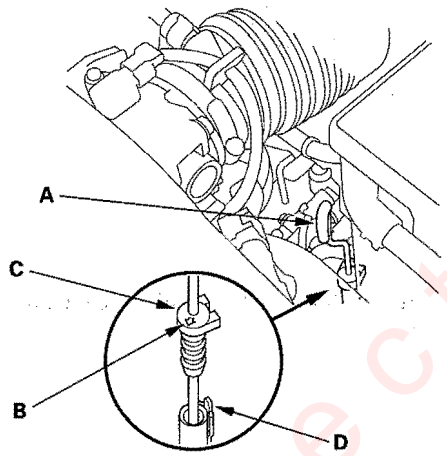

5. Remove the dipstick (A) and check the fluid level. It should be between upper mark (B) and lower mark (C).

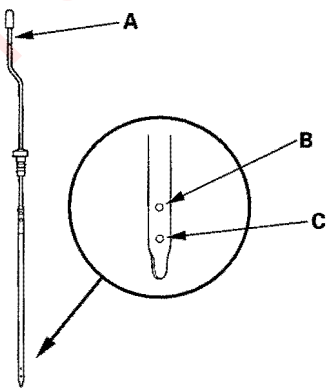

6. If the level is below the lower mark, check for fluid leaks at the transmission, hose and line joints. If a problem is found, fix it before filling the transmission.
   If the level is above the upper mark, drain the ATF to proper level (see step 3 on page 14-204).
7. If necessary fill transmission with the recommended fluid into the filler hole (A) to the upper mark on the dipstick. Always use Honda ATF-Z1 Automatic Transmission Fluid (ATF). Using a non-Honda ATF can affect shift quality.

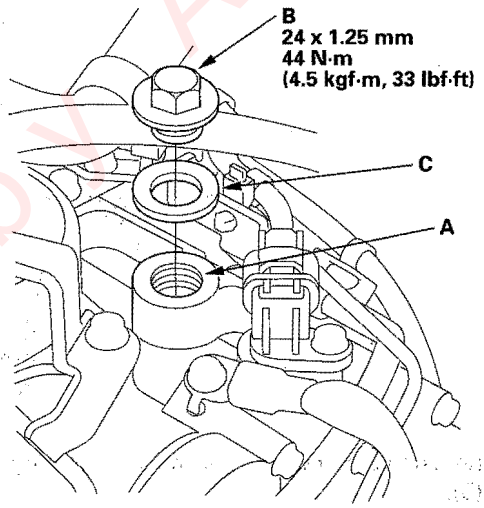

8. Install the ATF filler bolt (B) with a new sealing washer (C).
9. Insert the dipstick back into the dipstick guide pipe with pointing the arrow on the guide to the front of the vehicle.

Protected by A

ATF Replacement

NOTE: Keep all foreign particles out of the transmission.

1. Bring the transmission up to normal operating temperature (the radiator fan comes on).
2. Park the vehicle on level ground, and turn the engine off.
3. Remove the drain plug (A), and drain the automatic transmission fluid (ATF).

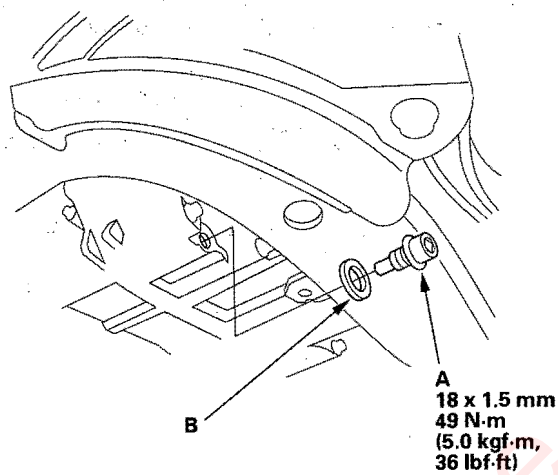

4. Reinstall the drain plug with a new sealing washer (B).
5. Refill transmission with the recommended fluid into the filler hole (A) to the upper mark on the dipstick. Always use Honda ATF-Z1 Automatic Transmission Fluid (ATF). Using a non-Honda ATF can affect shift quality.

Automatic Transmission Fluid Capacity:
3.0 ℓ (3.2 US qt) at change
7.0 ℓ (7.4 US qt) at overhaul

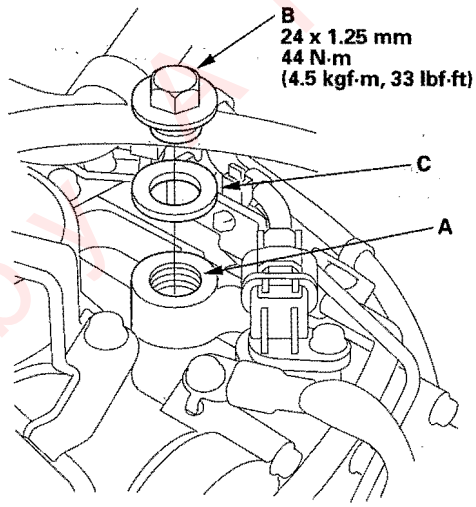

6. Install the ATF filler bolt (B) with a new sealing washer (C).

Protected by

Transmission Removal

Special Tools Required
- Engine support hanger, A and Reds AAR-T-12566 (Available through the Honda Tool and Equipment Program 888-424-6857)
- Engine hanger balance bar VSB02C000019
- Front subframe adapter VSB02C000016

NOTE: Use fender covers to avoid damaging painted surfaces.

1. Make sure you have the customer's radio and navigation anti-theft codes, and write down the XM radio channel presets.

2. Disconnect the support strut from both sides of the pivot ball (bolted to the hood). Secure the hood (A) in a vertical position. Remove the right side pivot ball and install it into the lower threaded hole (B), then reattatch the support strut.

   NOTE: Do not attempt to close the hood with the support strut in the vertical position; it will damage the support strut and the hood.

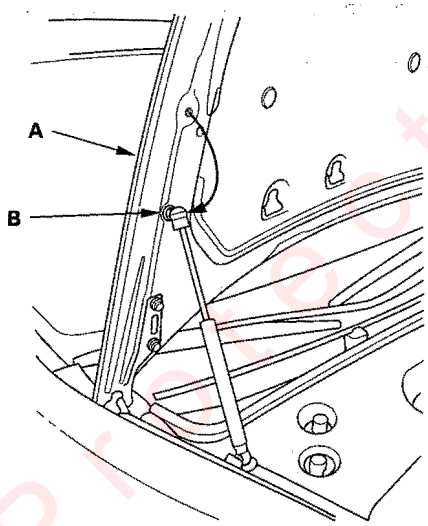

3. Set the wheels in the straight ahead position.

4. Lock the steering wheel.

5. Drain the power steering system fluid from the reservoir (see page 17-10).

6. Remove the steering joint cover (A).

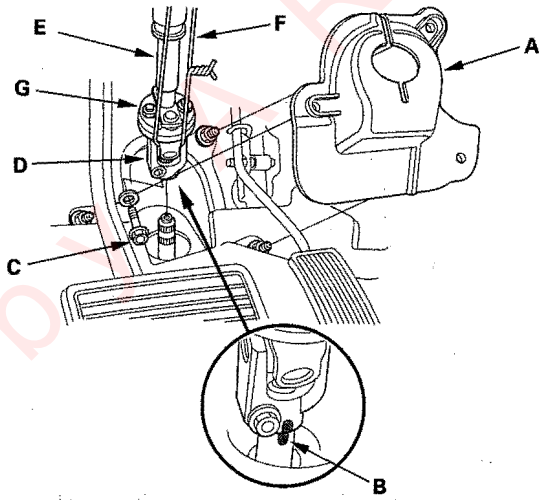

7. Make a reference mark (B) across the steering joint and steering gearbox pinion shaft. Remove the steering joint bolt (C), and disconnect the steering joint (D) by removing the steering joint toward the steering column. Hold the slider shaft (E) on the column with a peace of wire (F) between the joint yoke (G) on the slider shaft to the joint yoke on the upper shaft (see step 8 on page 17-24).

(cont'd)

Presented by AAR

Transmission Removal (cont'd)

8. Remove the covers in the order presented; left side engine compartment cover (A), left rear engine compartment cover (B), right fender trim (C), right side engine compartment cover (D), right rear engine compartment cover (E), left fender trim (F), front bulkhead cover (G), and intake manifold cover (H).

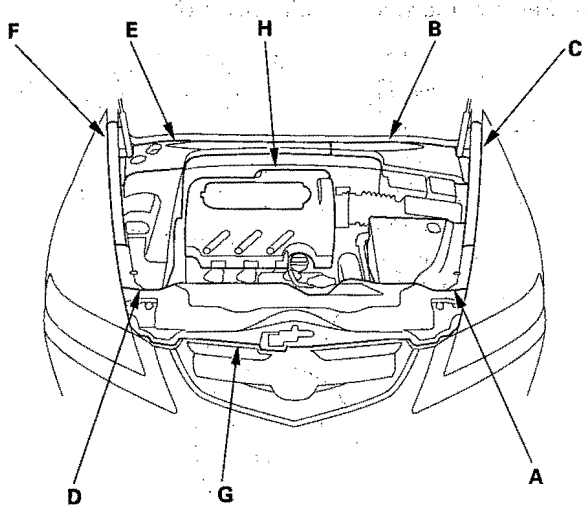

9. Remove the harness clamp (A) and two 6.0 mm bolts (B), and remove the strut brace (C).

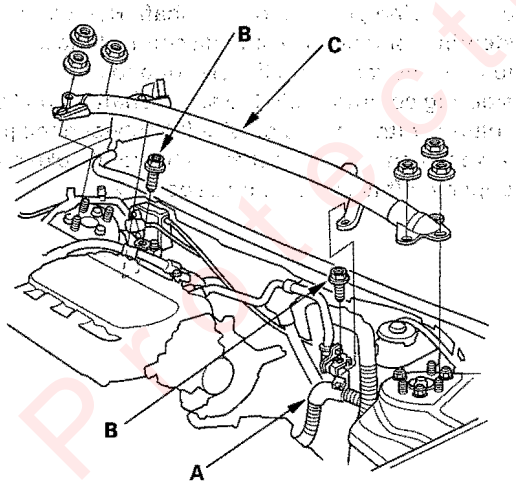

10. Remove the power steering pump outlet line (A) from the power steering pump, and remove the hose (B) from its clamp (C).

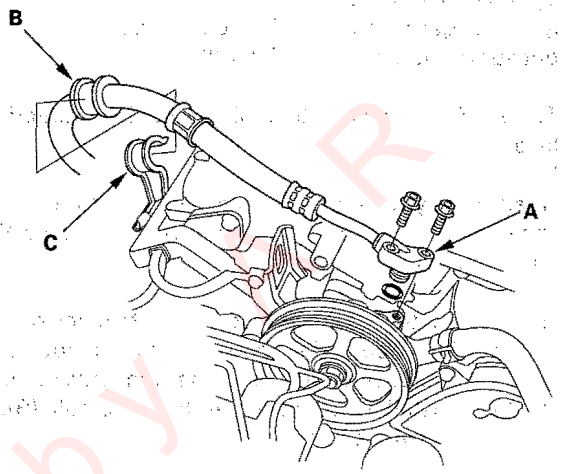

11. Lift the vehicle up on a lift or apply the parking brake, block rear wheels, and raise the front of the vehicle. Make sure it is securely supported.

12. Remove the transmission under cover.

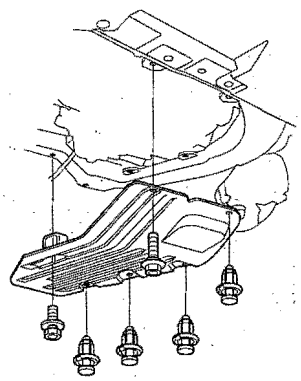

Protected by CR

13. Remove the splash shield.

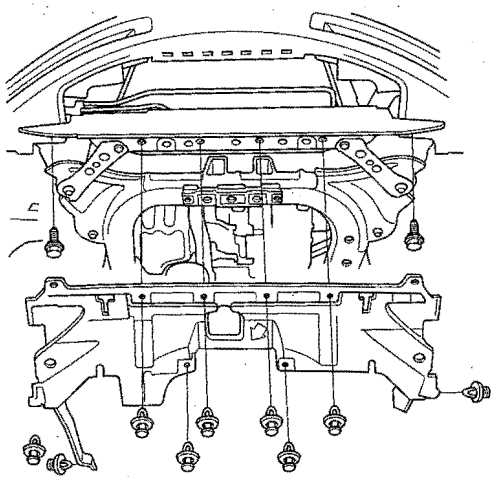

14. Remove the drain plug (A), and drain the automatic transmission fluid (ATF).

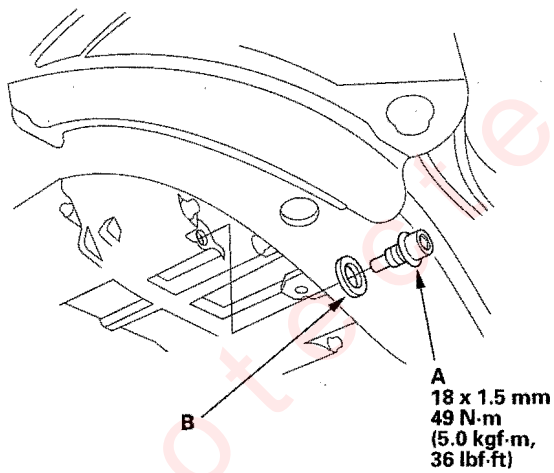

15. Reinstall the drain plug with a new sealing washer (B).

16. Make sure the ignition switch is OFF. Disconnect the battery negative terminal, then disconnect the battery positive terminal.

17. Remove the battery hold-down bracket, then remove the battery and battery tray.

18. Remove the resonator cover and resonator.

19. Remove the intake air duct and air cleaner housing.

20. Remove the two bolts securing the battery base from under the vehicle, and remove the two bolts securing the battery base in the engine compartment, then remove the battery base.

21. Remove the starter cables (A) from the starter (B), then remove the starter.

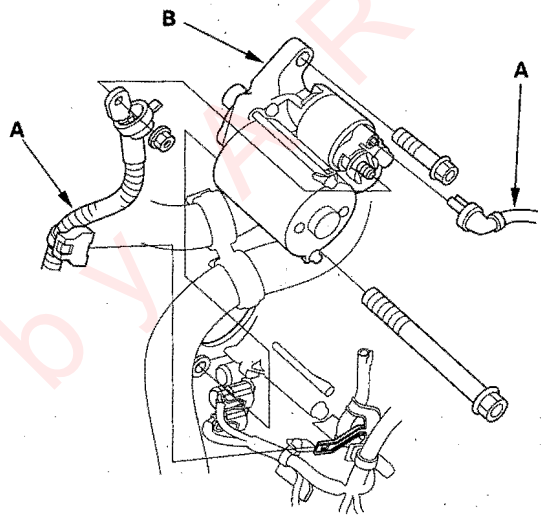

22. Remove the transmission upper mount bracket (A) and bracket plate (B).

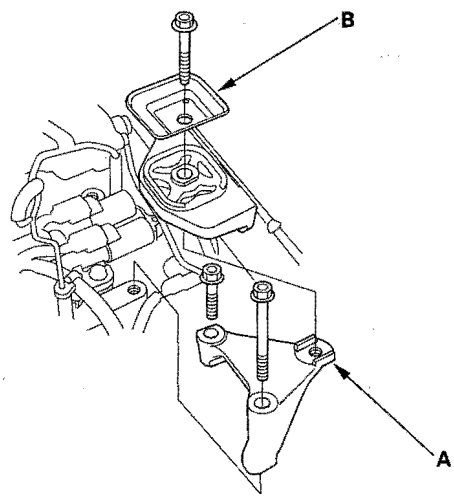

(cont'd)

Protected by HR

Transmission Removal (cont'd)

23. Remove the transmission subharness connector (A) from its bracket (B), then disconnect it.

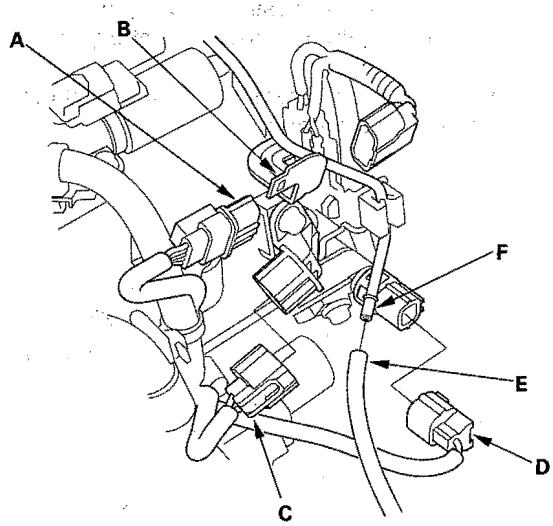

24. Disconnect the input shaft (mainshaft) speed sensor connector (C) and 4th clutch transmission fluid pressure switch connector (D), and disconnect the vacuum hose (E) from the vacuum line (F).

25. Disconnect shift solenoid valve A connector, shift solenoid valve C connector, and A/T clutch pressure control solenoid valve C connector (B), and remove the harness clamps (D) from the clamp brackets (E).

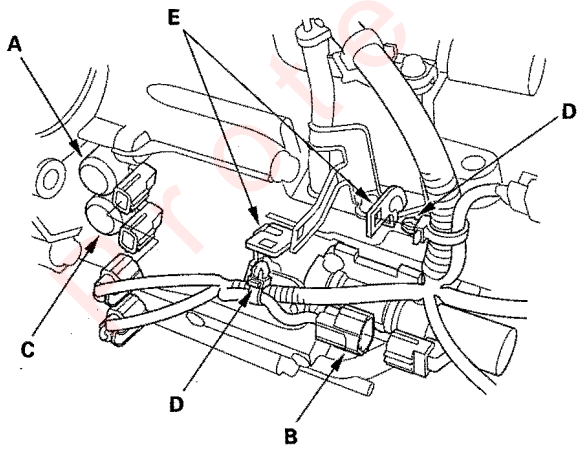

26. Disconnect the A/T clutch pressure control solenoid valve A connector, and solenoid valve B connector, and remove the harness clamp (C) from the clamp bracket (D).

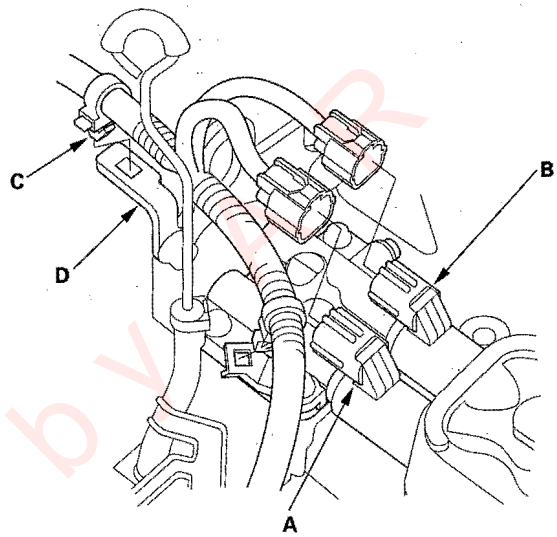

27. Disconnect the connectors from the torque converter clutch solenoid valve (A) and shift solenoid valve B.

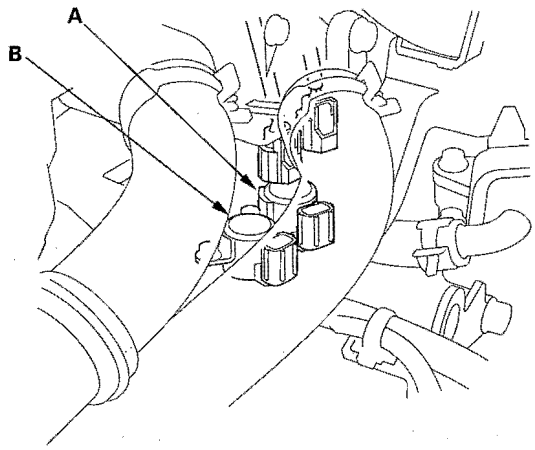

Protected by

28. Remove the transmission range switch connector (A) from its bracket (B), and disconnect it.

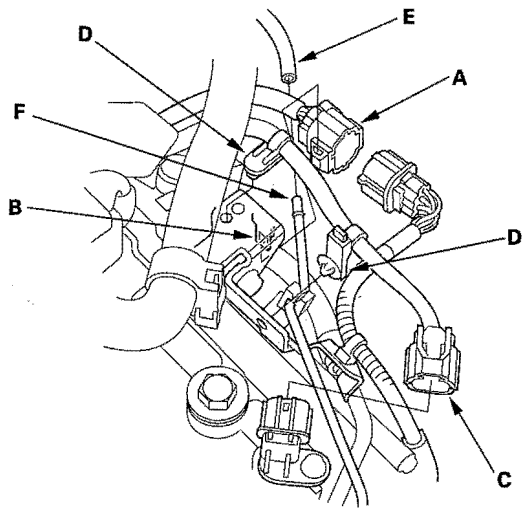

29. Disconnect the output shaft (countershaft) speed sensor connector (C), and remove the harness clamps (D) from the brackets. Disconnect the vacuum hose (E) from the vacuum line (F).

30. Remove the harness clamps (A) from the brackets (B), remove the harness cover (C) from the bracket (B), and remove the bolt securing the bracket.

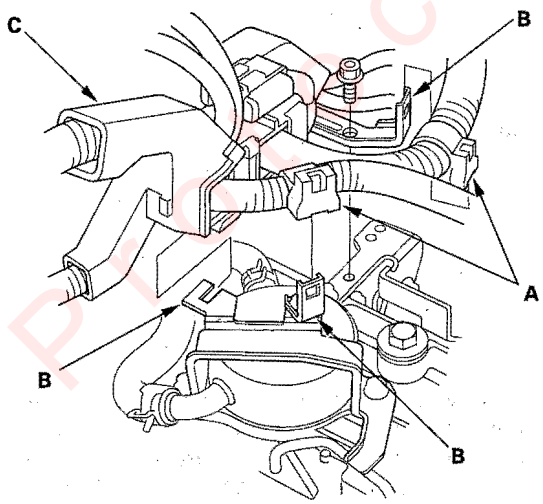

31. Remove the transmission ground cable (A), and disconnect the breather tube (B).

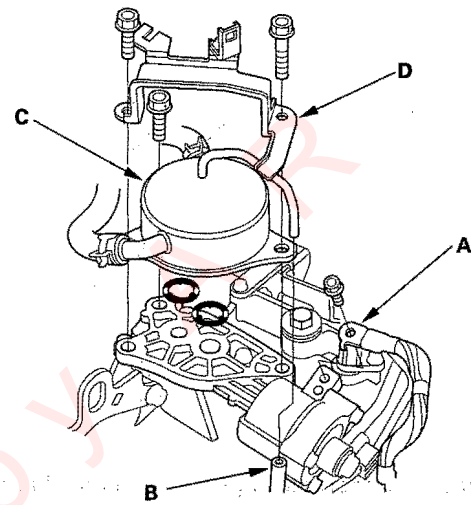

32. Put shop rags around the ATF warmer (C) to remove the ATF that flows out.

33. Remove the bolts securing the ATF warmer and the bracket (D), then remove the ATF warmer from the transmission housing. Cover the fluid passages on the transmission and ATF warmer with tape. Do not disconnect the hoses.

34. Remove the connector bracket from the engine front cylinder head; use the bracket bolt to attach engine balancer bar front arm.

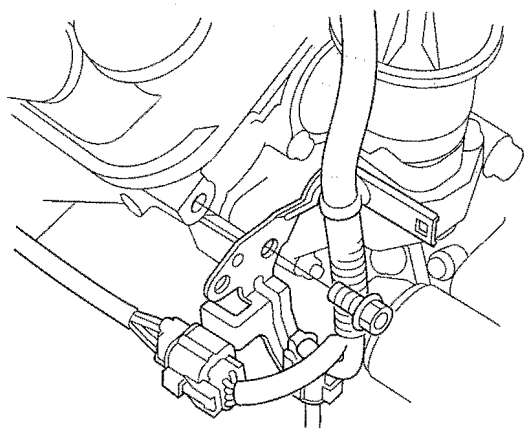

(cont'd)

Produced by

Transmission Removal (cont'd)

35. Remove the harness clamp bracket from the engine rear cylinder head; use the bracket bolt to attach engine balancer bar rear arm.

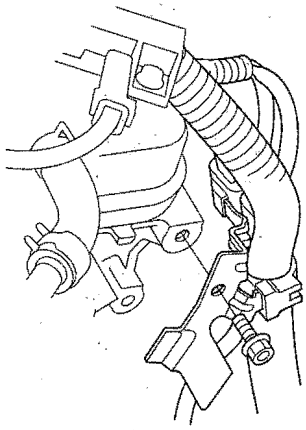

36. Lift and support the engine with engine hanger (A) and engine balancer bar (B).
Attach the front arm (C) to the front cylinder head with a spacer (D) and the connector bracket bolt (10 x 1.25 mm) (E). Attach the rear arm (F) to the rear cylinder head with the harness clamp bracket bolt (8 x 1.25 mm) (G).

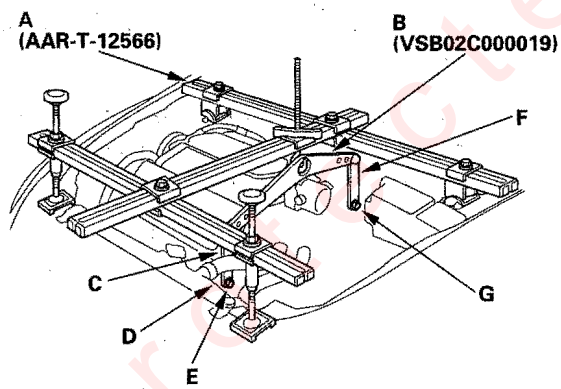

37. Remove the front mount stop (A), and remove the front mount bolt (B).

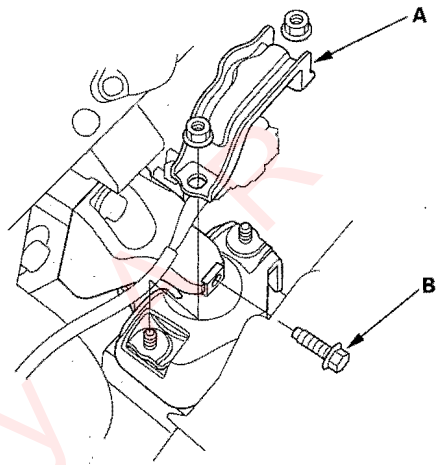

38. Insert a 6 mm Allen wrench (A) in the top of the ball joint pin (B), and remove the nuts (C), then separate the stabilizer link (D) from the lower arms (E).

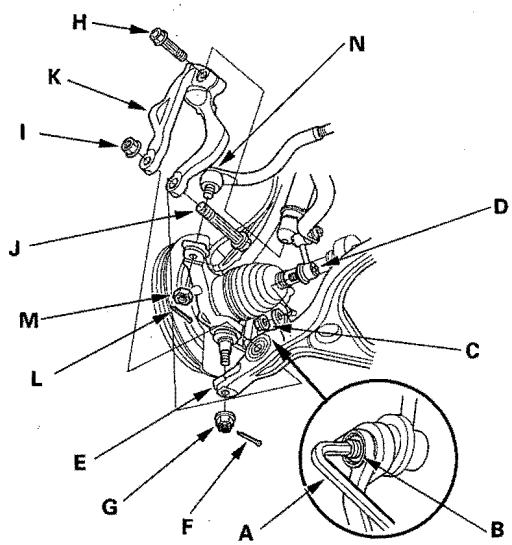

39. Remove the cotter pins (F), castle nuts (G), damper pinch bolt (H), self-locking nut (I), bolt (J), and damper forks (K), then separate the ball joints from the lower arms (see step 11 on page 17-30).

40. Remove the cotter pins (L) and nuts (M), and separate the tie-rod end ball joints (N) from the knuckles (see step 11 on page 17-30).

Protected by AR

41. Remove exhaust pipe A and its mount.

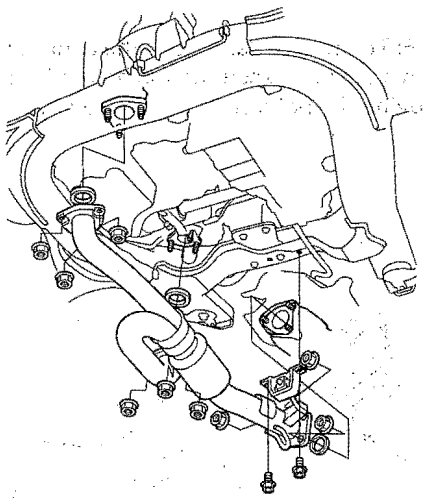

42. Remove the steering gearbox heat shield (A).

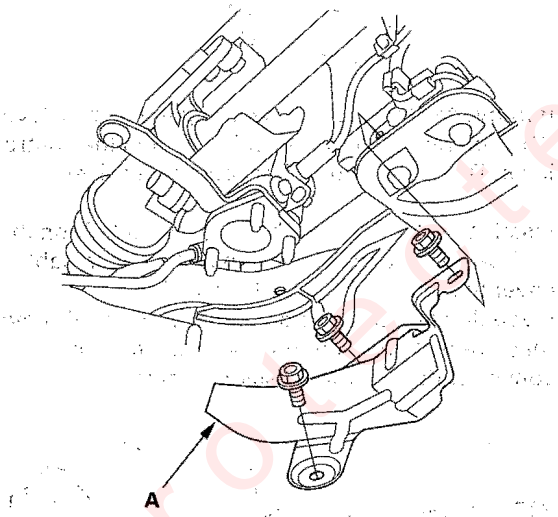

43. Remove the power steering fluid hose from its line on the front subframe.

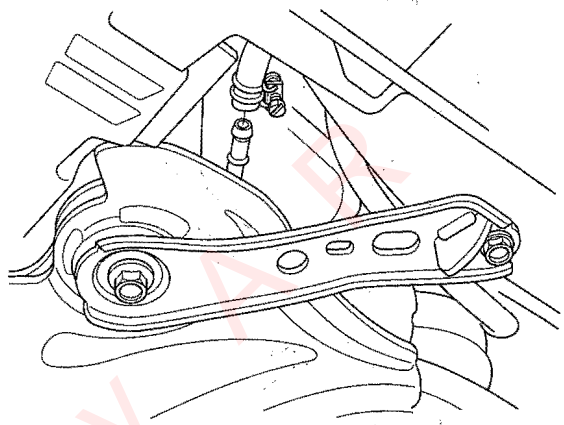

44. Disconnect the power steering pressure switch connector.

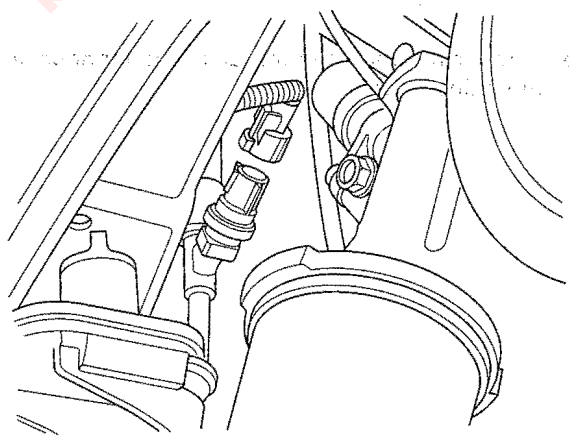

(cont'd)

Protected by AR

Transmission Removal (cont'd)

45. Remove the torque converter cover (A), and remove the drive plate bolts (B) while rotating the crankshaft pulley.

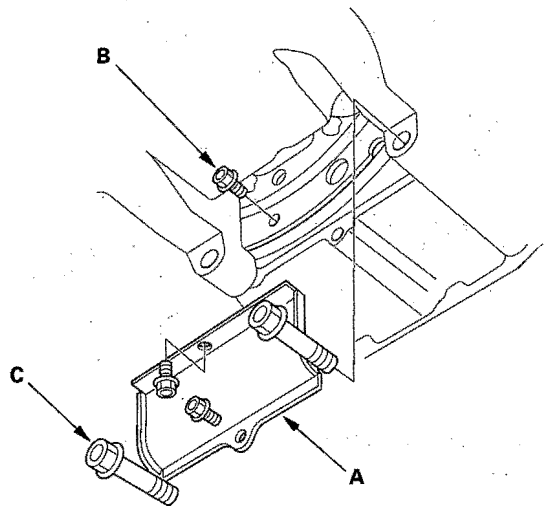

46. Remove the engine-to-torque converter housing mounting bolts (C).

47. Remove the bolts securing shift cable holder (A), then remove shift cable cover (B).

    NOTE: To prevent damage to the control lever joint, remove the bolts securing the holder before removing the bolts securing the cover.

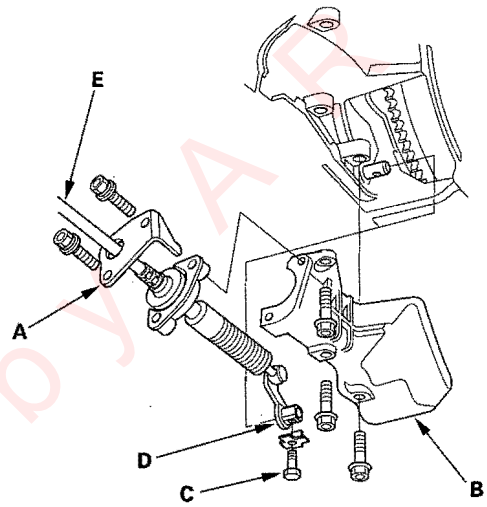

48. Remove the lock bolt (C) securing the control lever (D), then remove the shift cable (E) and the control lever. Do not bend the shift cable excessively.

49. Install a 6 x 1.0—14 mm bolt (A) and nut (B) on the shift cable cover (C), then reinstall the shift cable cover to the torque converter housing.
    If you don't do this, the bolt head of the cable cover may prevent you from removing the torque converter during transmission removal.

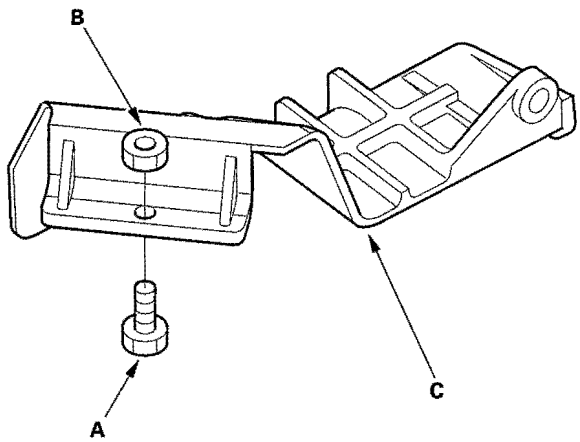

Protected by AR

50. Remove the rear mount base bracket bolts.

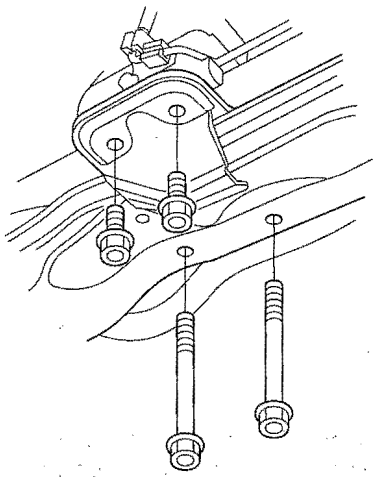

51. Remove the transmission lower mount nuts.

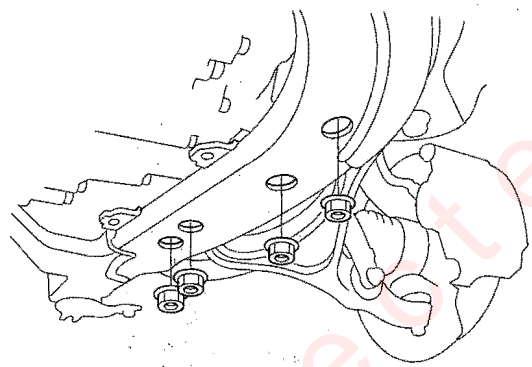

52. Remove the both mid-mounts.

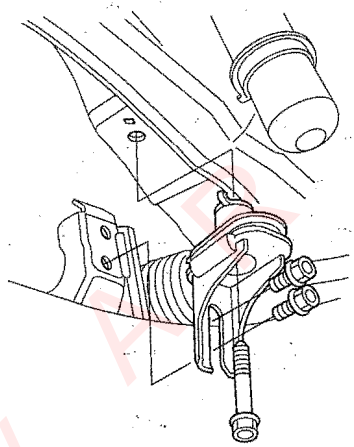

53. Make the appropriate reference lines (A) at both ends of the subframe (B) that line up with the edge (C) of the stiffeners (D).

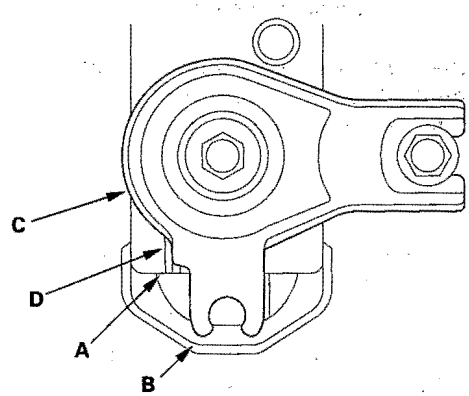

Protected by AP

(cont'd)

Transmission Removal (cont'd)

54. Attach the special tool to the subframe by hanging the strap of the special tool over the front of the subframe, then secure the strap with its stop.

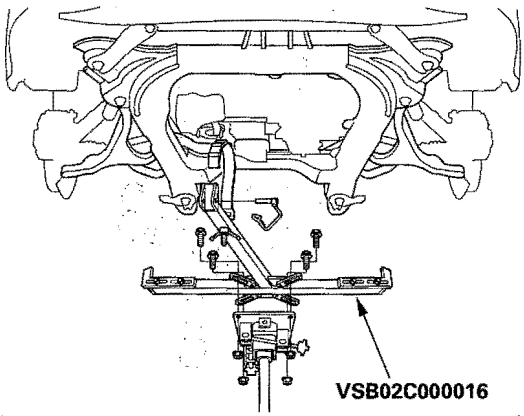

55. Raise the jack and line up the slots in the arms with the bolt holes on the corner of the jack base, then attach them with bolts securely.

56. Remove the four bolts securing the stiffeners (A), and four bolts securing the front subframe (B), and lower the front subframe.

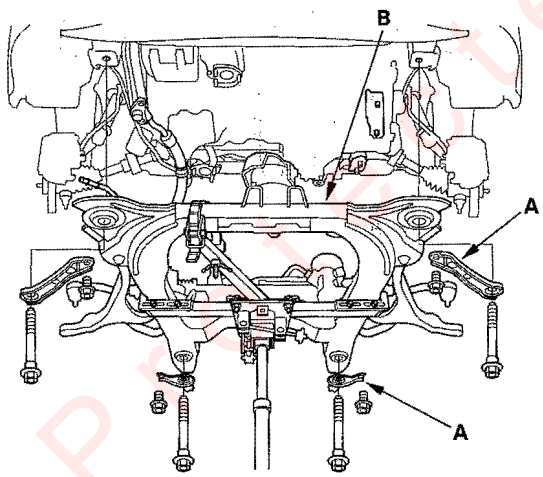

57. Remove the transmission lower mounts.

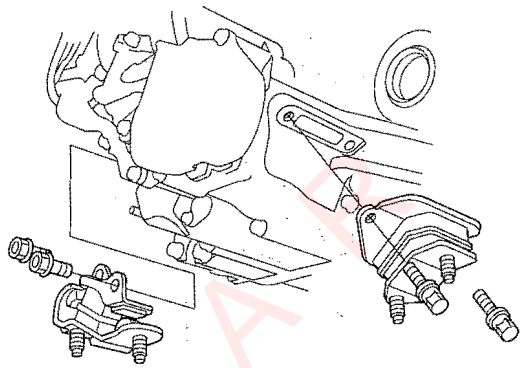

58. Remove the driveshafts from the differential and intermediate shaft (see step 11 on page 16-5).

59. Remove the exhaust manifold bracket (A) and heat shield (B).

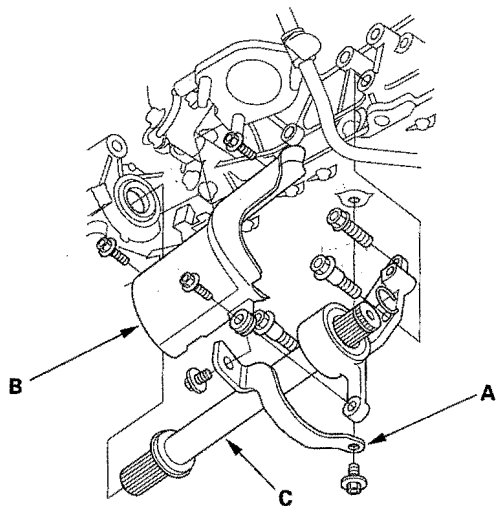

60. Remove the intermediate shaft (C).

61. Coat all precision finished surfaces with clean engine oil, then tie plastic bags over both ends of driveshaft and intermediate shaft.

Printed by AP

62. Place a jack under the transmission.

63. Remove the transmission housing mounting bolts.

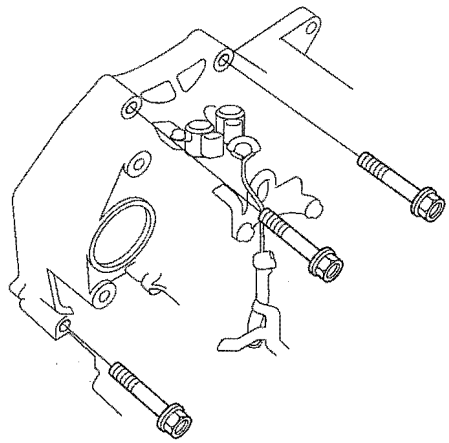

64. Remove the bolt (A) securing the harness clamp bracket, and remove the front mount bracket (B).

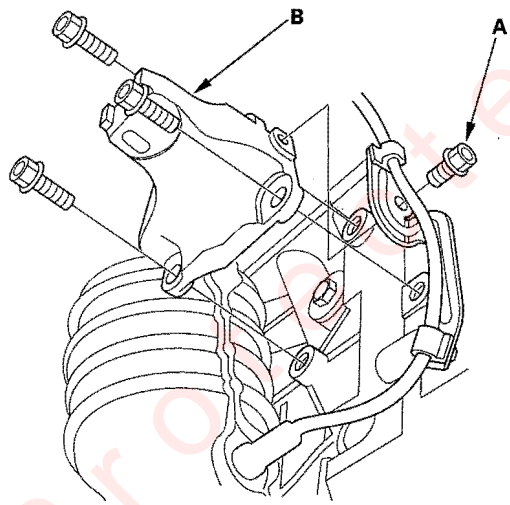

65. Remove the transmission housing mounting bolts.

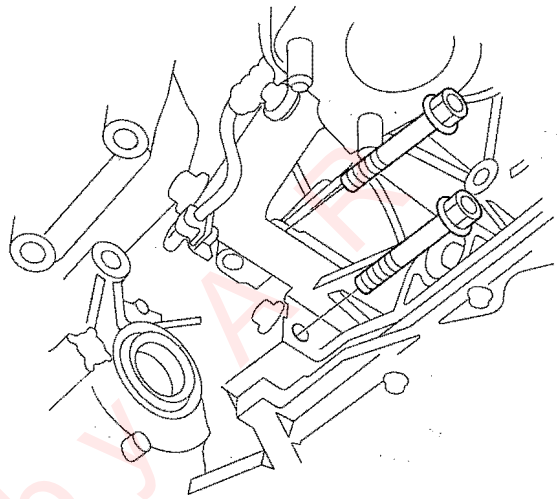

66. Slide the transmission away from the engine to remove it from the vehicle.

67. Remove the shift cable cover, then remove the torque converter and dowel pins.

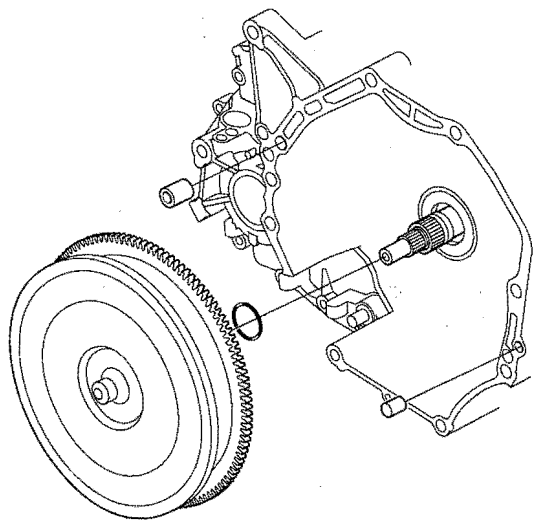

(cont'd)

Protected by AFR

Transmission Removal (cont'd)

68. Remove the vacuum line from the transmission.

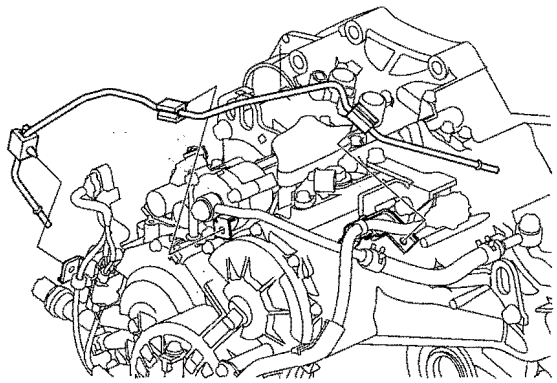

69. Remove the 6 x 1.0 — 14 mm bolt (A) and nut (B) that you installed on the shift cable cover (C) in step 49.

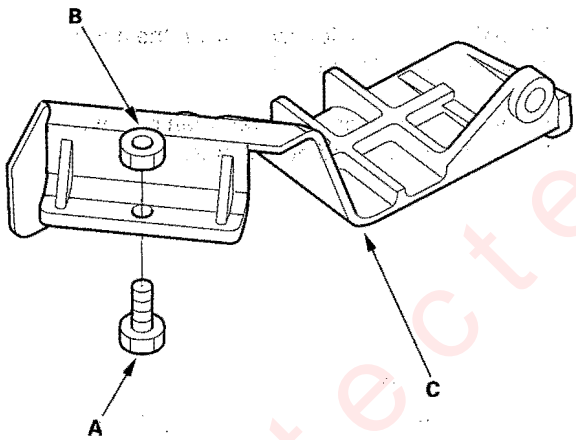

70. Inspect the drive plate, and replace it if it's damaged.

Drive Plate Removal and Installation

1. Remove the drive plate (A) and washer (B) from the engine crankshaft.

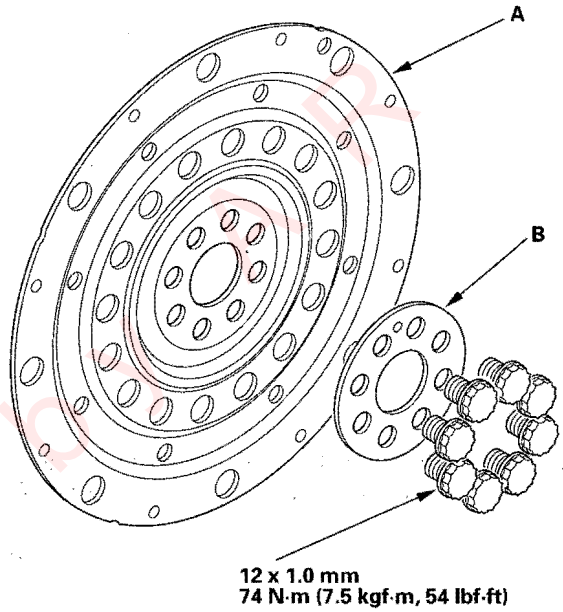

2. Install the drive plate and washer on the engine crankshaft, and tighten the eight bolts in a crisscross pattern in two or more steps.

Protected by

Transmission Installation

NOTE: Use fender covers to avoid damaging painted surfaces.

1. Install the vacuum line on the transmission.

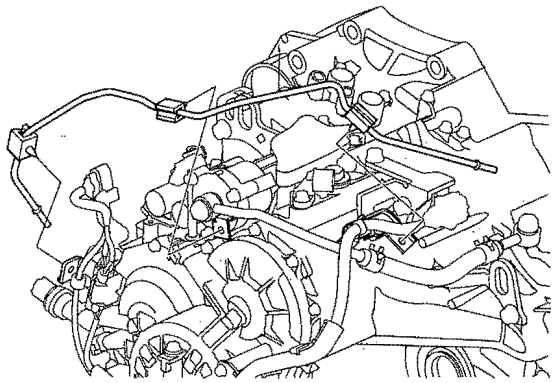

2. Install the torque converter assembly (A) on the mainshaft (B) with the new O-ring (C).

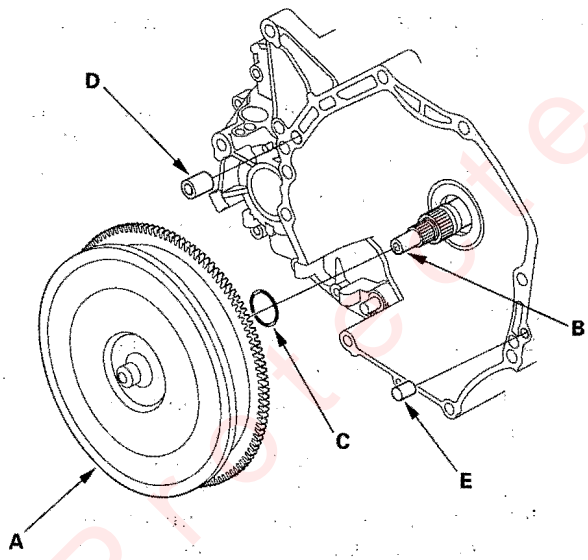

3. Install the 14 x 20 mm dowel pin (D) and 10 x 20 mm dowel pin (E) in the torque converter housing.

4. Place the transmission on the jack, and raise the transmission to the engine level.

5. Attach the transmission to the engine, then install the transmission housing mounting bolts.

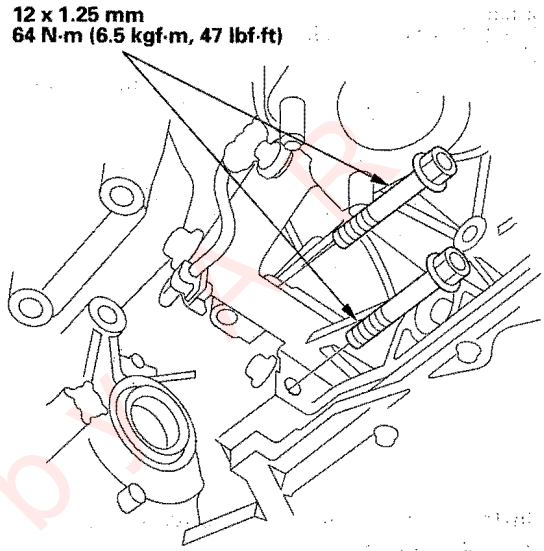

6. Install the transmission housing mounting bolts.

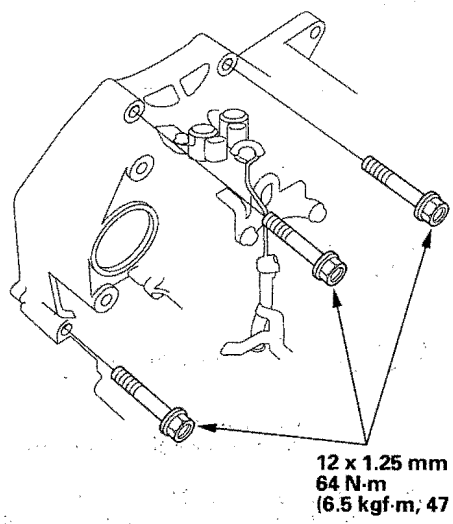

7. Remove the jack from the transmission.

(cont'd)

Transmission Installation (cont'd)

8. Install the front mount bracket with the new bolts, and install the harness clamp on the mount bracket.

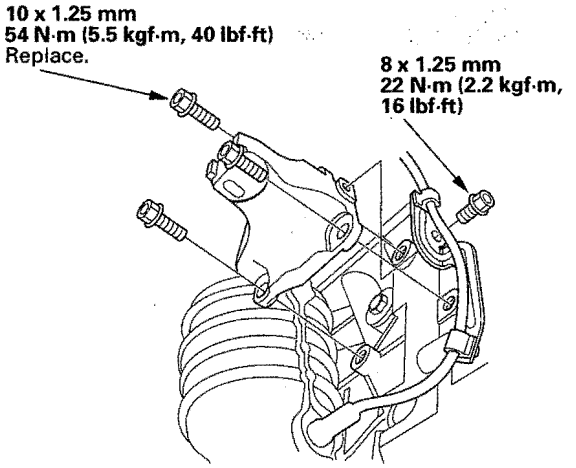

9. Install the engine-to-torque converter housing mounting bolts.

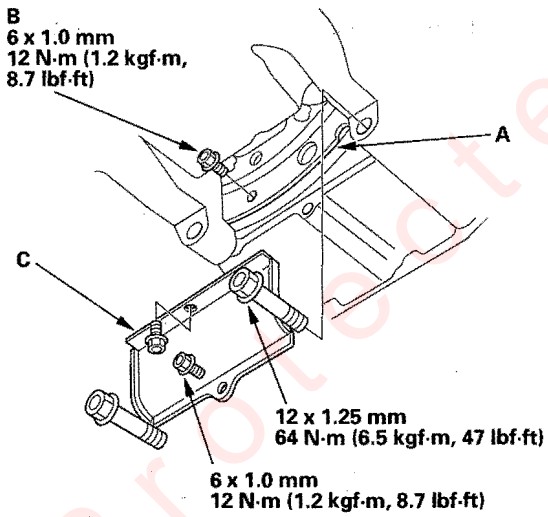

10. Attach the torque converter to the drive plate (A) with eight bolts (B). Rotate the crankshaft pulley as necessary to tighten the bolts to 1/2 of the specified torque, then to the final torque, in a crisscross pattern. After tightening the last bolt, check that the crankshaft rotate freely.

11. Install the torque converter cover (C).

12. Install the new set ring (A) on the intermediate shaft (B).

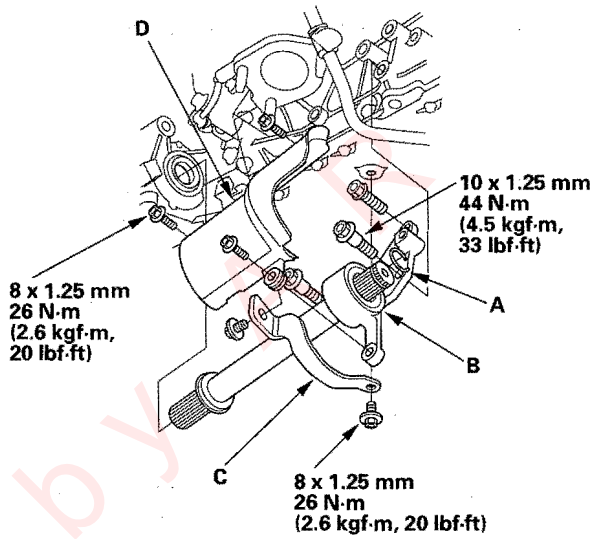

13. Install the exhaust manifold bracket (C) and heat shield (D).

14. Install the new set ring on the left driveshaft, then install the left driveshaft in the differential (see page 16-18). While installing the driveshaft in the differential, be sure not to allow dust or other foreign particles to enter the transmission. Install the left driveshaft over the intermediate shaft.

NOTE:
- Clean the areas where the driveshaft and intermediate shaft contact the transmission (differential) with solvent or carburetor cleaner, and dry with compressed air.
- Turn the right and left steering knuckle fully outward, and slide the driveshaft and intermediate shaft into the differential and intermediate shaft until you feel its set ring engage the side gear.

Protected by

15. Install the transmission lower front mount (A).

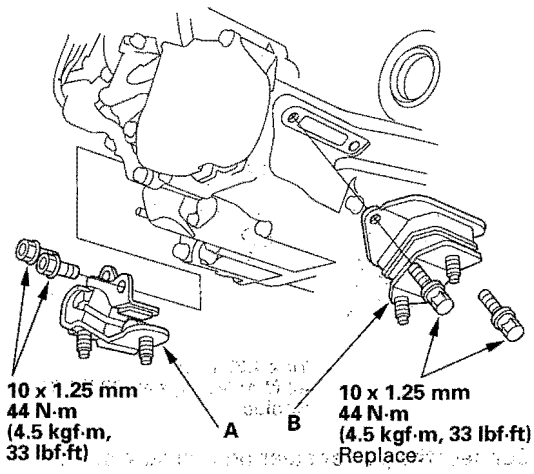

16. Install the transmission lower rear mount (B) with the new bolts.

17. Support the front subframe (A) with the special tool and a jack, and lift it up to body.

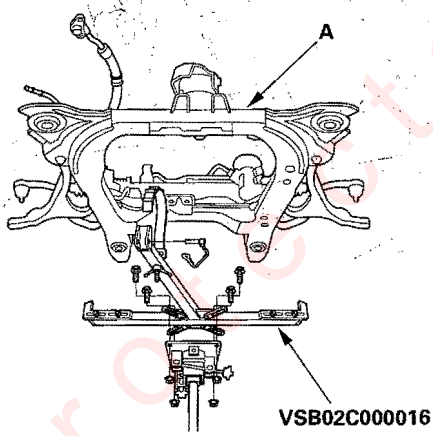

18. Loosely install the new subframe mounting bolts (A), and new rear stiffener mounting bolts (B), and the front stiffener mounting bolts (C).

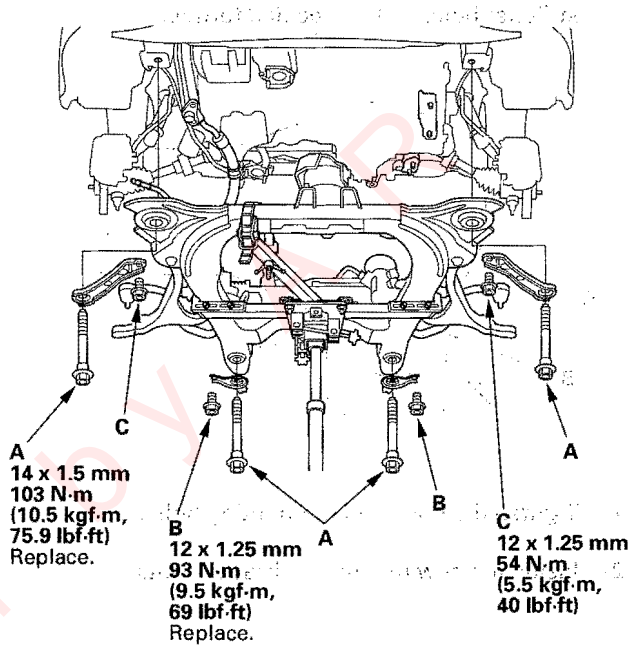

19. Loosely install both of the new both mid-mount mounting bolts.

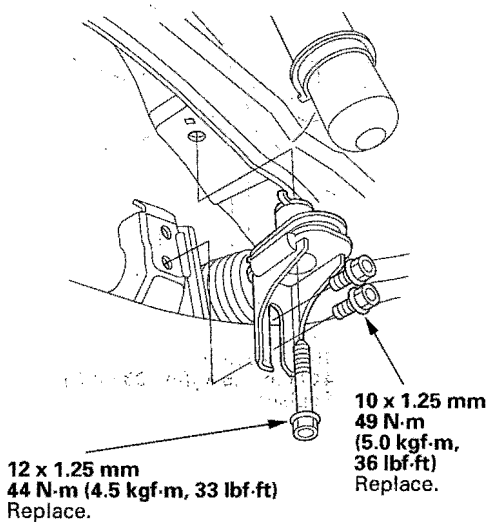

(cont'd)

Protected by

Transmission Installation (cont'd)

20. Align the reference marks (A) with edge (B) of both rear stiffeners (C), and tighten the rear subframe mounting bolts, then front bolts, and tighten the stiffener bolts to the specified torque.

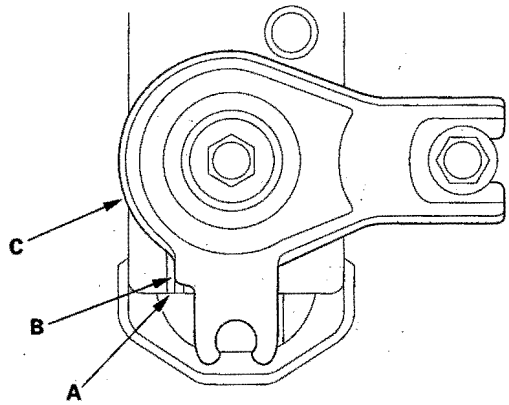

21. Tighten the mid-mount mounting bolts.

22. Install the new rear mount bracket bolts.

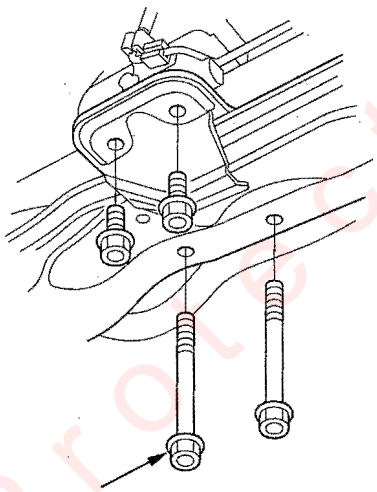

10 x 1.25 mm
44 N·m (4.5 kgf·m, 33 lbf·ft)
Replace.

23. Install the new transmission lower mount nuts.

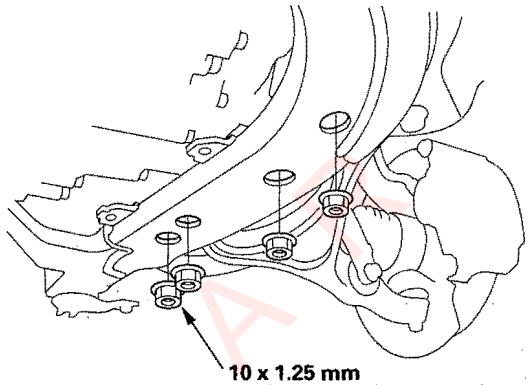

10 x 1.25 mm
44 N·m (4.5 kgf·m, 33 lbf·ft)
Replace.

24. Connect the power steering pressure switch connector.

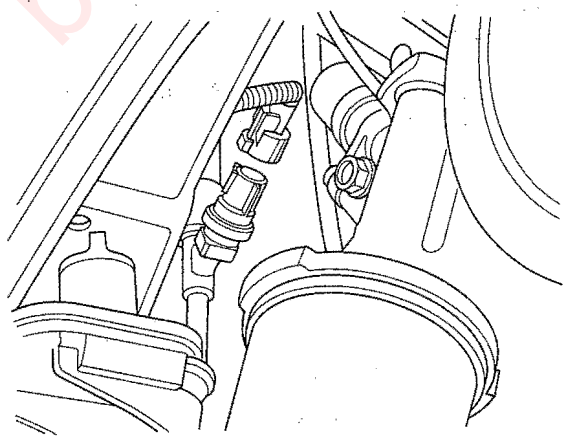

Protected by ATN

25. Connect the power steering hose to the power steering line.

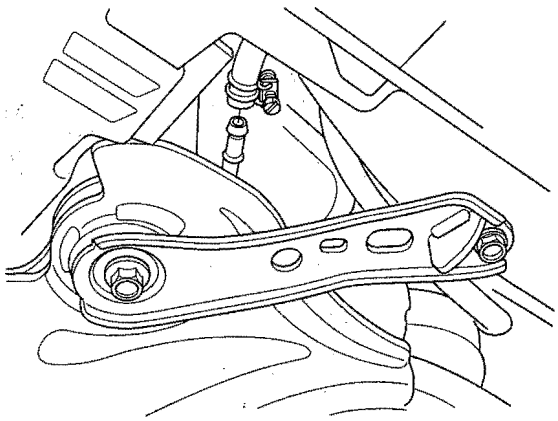

26. Install control lever (A) on the control shaft (B). Do not bend the shift cable excessively.

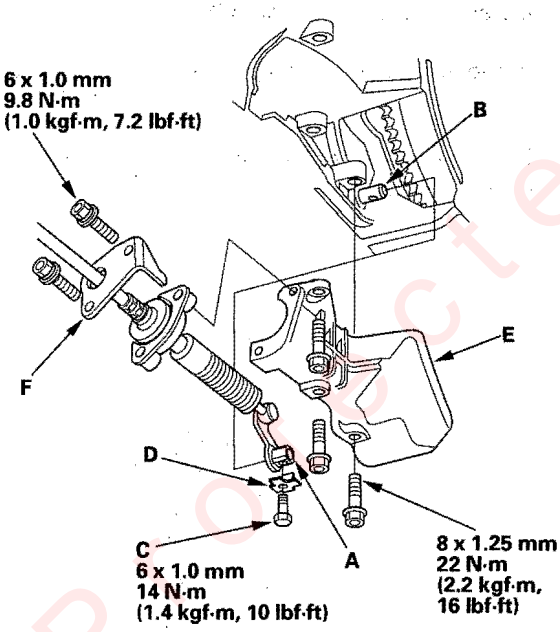

27. Install the lock bolt (C) with a new lock washer (D), then bend the lock washer tab against the bolt head.

28. Install the shift cable cover (E), then secure the shift cable holder (F) on the cover with the bolts.

NOTE: To prevent damage to the control lever joint, be sure install the shift cable holder after installing the shift cable cover to the torque converter housing.

29. Install the steering gearbox heat shield (A).

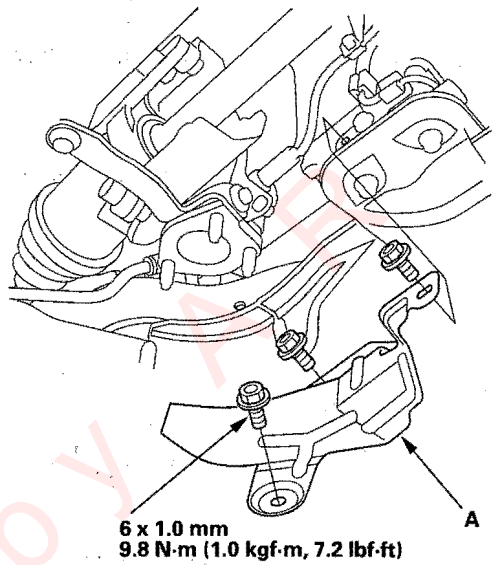

30. Install exhaust pipe A with the new self-locking nuts, its mount (B), and new gaskets (C) (D).

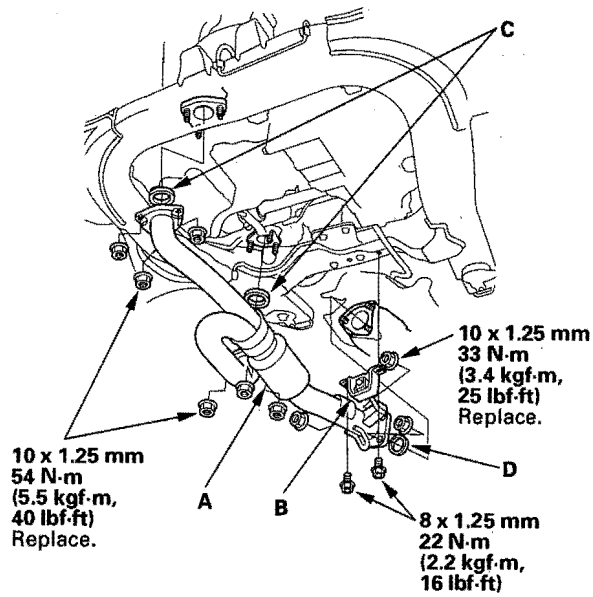

(cont'd)

Protected by ...

Transmission Installation (cont'd)

31. Install the damper forks (A) with damper pinch bolts (B) and the new self-locking nuts (C), then install the ball joints on the lower arms (D) with the ball joint nuts (E) and new cotter pins (F) (see step 18 on page 18-15).

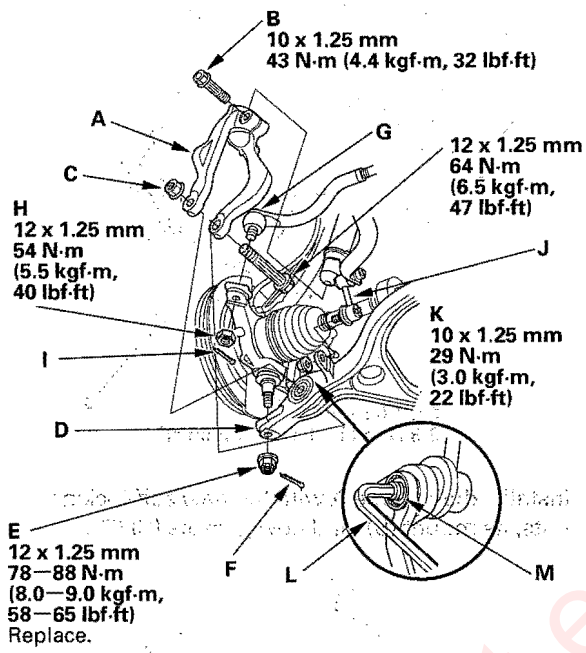

32. Install the tie-rod end ball joints (G) to each knuckle with the nuts (H) and new cotter pins (I) (see step 18 on page 18-15).

33. Install the stabilizer links (J) to the lower arms, and install the nuts (K). Insert a 6 mm Allen wrench (L) in the ball joint (M), and tighten the nuts.

34. Install the new front mount bolt (A).

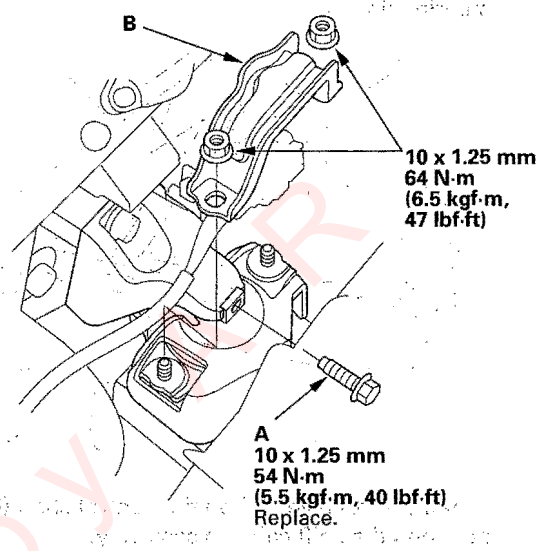

35. Install the front mount stop (B).

36. Remove the engine hanger and engine balancer bar.

37. Install the harness clamp bracket to the engine rear cylinder head.

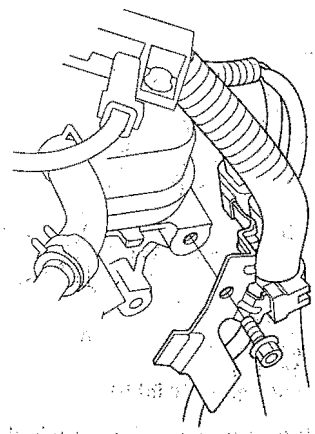

Protected by

38. Install the connector bracket to the engine front cylinder head.

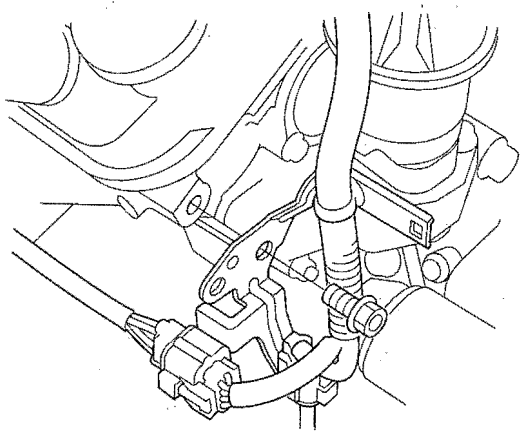

39. Install the ATF warmer (A) with new O-rings (B) and the bracket (C) on the transmission housing. Do not pinch the O-rings.

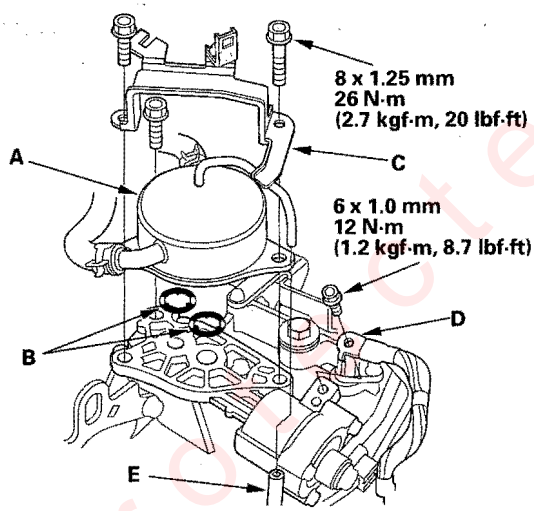

40. Install the transmission ground cable (D), and connect the breather tube (E).

41. Install the harness clamp bracket (A), and install the harness cover (B) on the bracket (C).

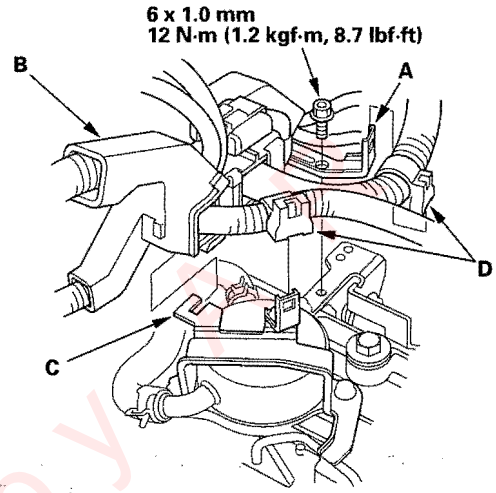

42. Install the harness clamps (D) on the clamp brackets.

43. Connect the output shaft (countershaft) speed sensor connector (A), and install the harness clamps (B) on the brackets. Connect the vacuum hose (C) to the vacuum line (D).

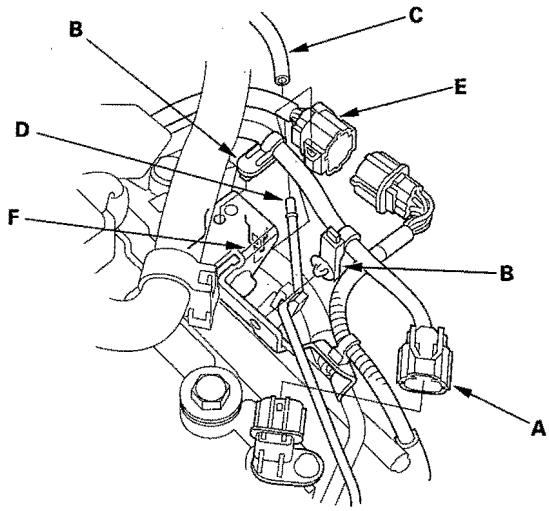

44. Connect the transmission range switch connector (E), then install it on its bracket (F).

(cont'd)

Protected by

Transmission Installation (cont'd)

45. Connect the connectors to the torque converter clutch solenoid valve (A) and shift solenoid valve B.

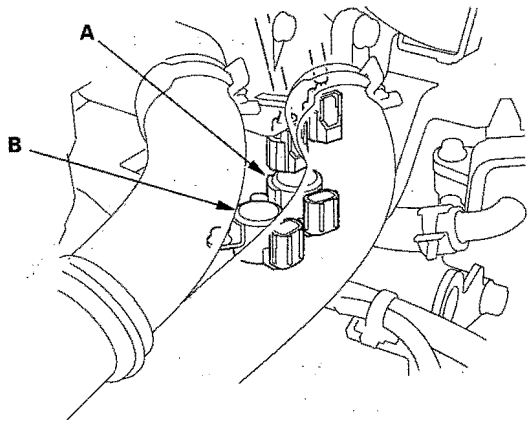

46. Connect the A/T clutch pressure control solenoid valve A connector, and solenoid valve B connector, and install the harness clamp (C) on the clamp bracket (D).

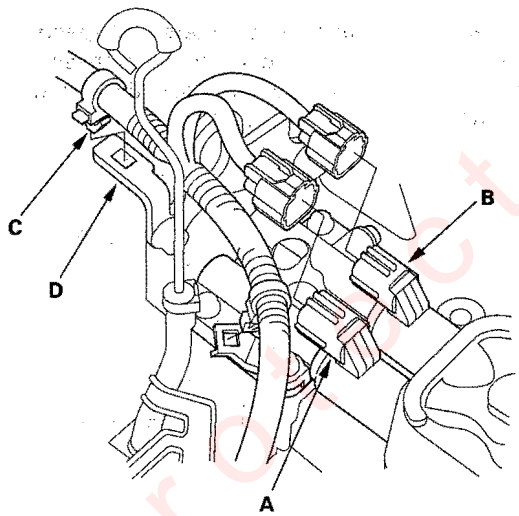

47. Connect shift solenoid valve A connector, solenoid valve C connector, and A/T clutch pressure control solenoid valve C connector (B), and install the harness clamps (D) on the clamp brackets (E).

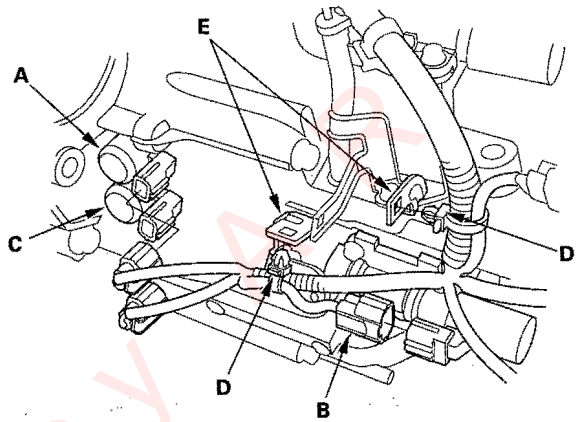

48. Connect the input shaft (mainshaft) speed sensor connector (A) and 4th clutch transmission fluid pressure switch connector (B), and connect the vacuum hose (C) to the vacuum line (D).

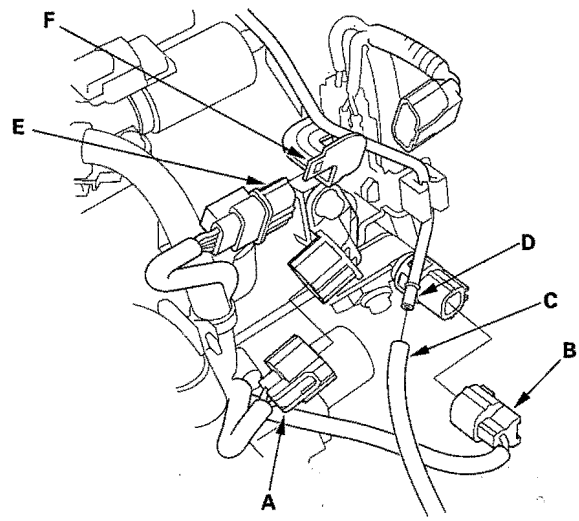

49. Connect the transmission subharness connector (E), then install it on its bracket (F).

Protected by

50. Install the transmission upper mount bracket (A) on the transmission with two bolts.

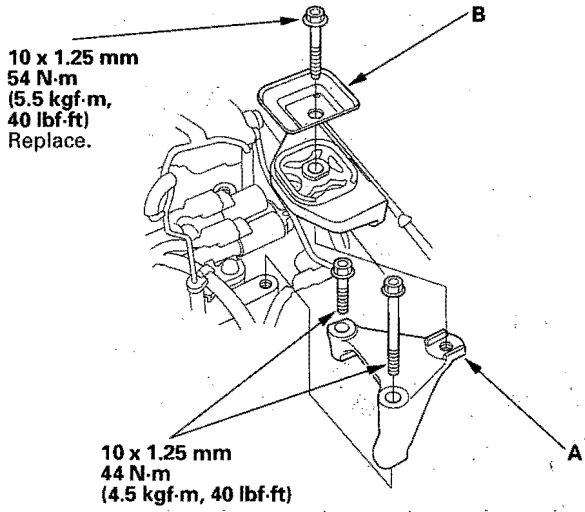

51. Install the new upper mount bolt and bracket plate (B).

52. Install the starter (A) on the torque converter housing. Connect the starter cables (B) to the starter, and install the harness clamp on the clamp bracket.

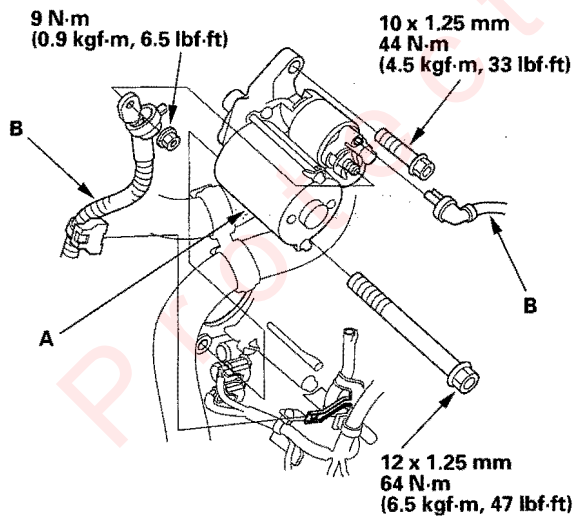

53. Insert the power steering pump outlet line (A) with a new O-ring (B) to the pump (C), and install the hose (D) in its clamp (E).

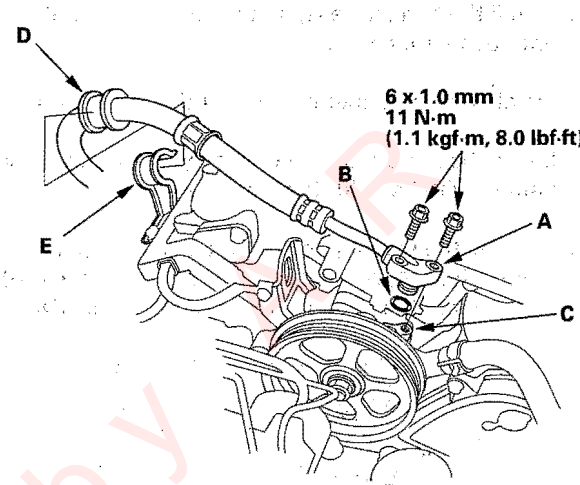

54. Refill the power steering fluid reservoir with fluid to the upper level line.

55. Install the strut brace (A).

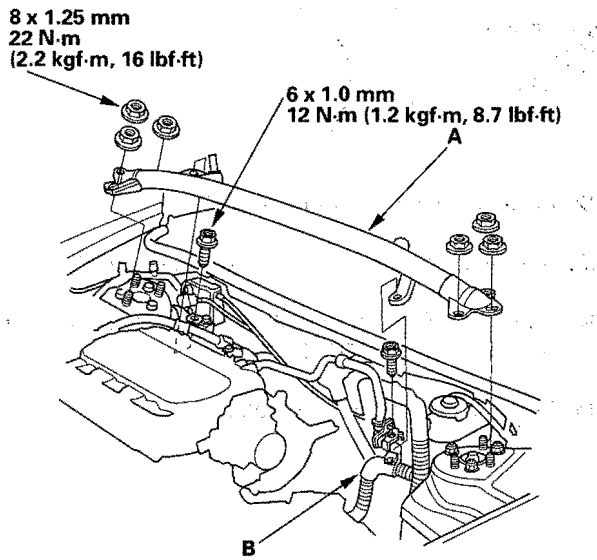

56. Install the two 6.0 mm bolts, and install the harness clamp (B) on its clamp bracket.

(cont'd)

Protected by

Transmission Installation (cont'd)

57. Refill the transmission with ATF (see step 5 on page 14-204).

58. Install the battery base, and install the resonator and resonator cover.

59. Install the air cleaner housing and intake air duct.

60. Install the battery tray and battery, then secure the battery with its hold-down bracket.

61. Connect the steering joint to the steering gearbox pinion shaft (A) by aligning the reference mark (B), and remvoe the wire (C) from the joint yoke (D).

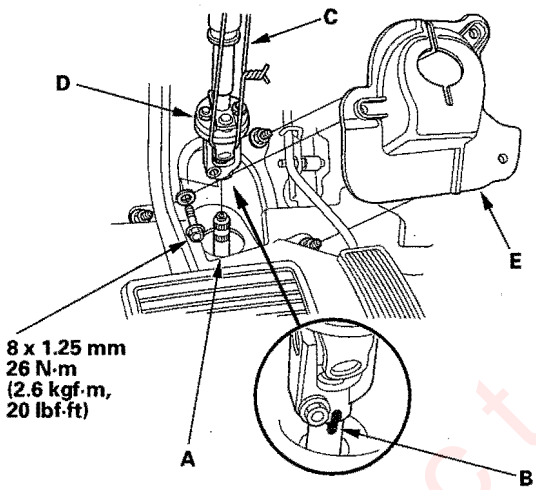

62. Install the steering joint cover (E).

63. Remove the steering wheel (see page 17-22).

64. Center the SRS cable reel and reinstall the steering wheel (see page 17-23).

65. Connect the batery terminals.

66. Install the splash shield.

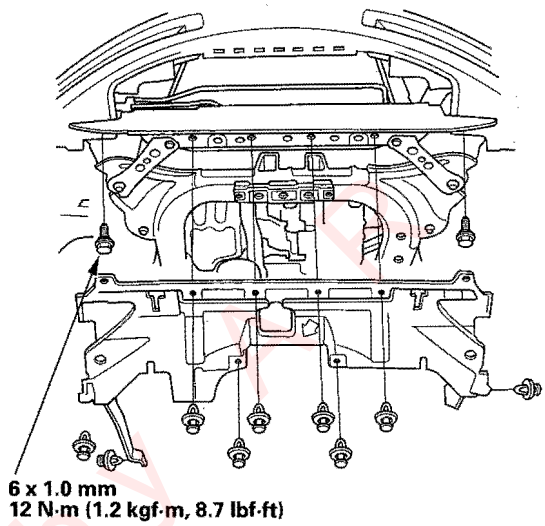

67. Install the transmission under cover.

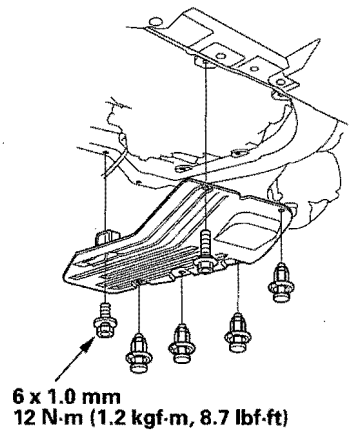

Protected by

68. Install the covers in the order presented; intake manifold cover (A), front bulkhead cover (B), left fender trim (C), right rear engine compartment cover (D), right side engine compartment cover (E), right fender trim (F), left rear engine compartment cover (G), and left side engine compartment cover (H).

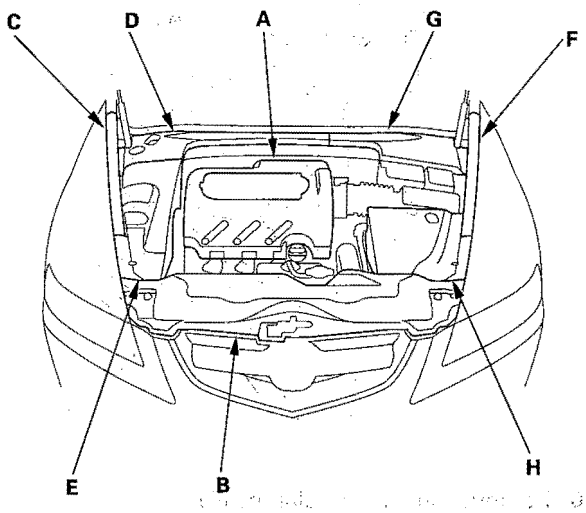

69. Reinstall the hood support struts to the proper locations on both sides of the hood.

70. Set the parking brake. Start the engine, and shift the transmission through all gears three times.

71. Start the engine, and run it fast idle, then turn the steering wheel from lock-to-lock several times to blead air from the system.

72. Recheck the fluid level, and refill if necessary.

73. Check the shift lever operation, A/T gear position indicator operation, and shift cable adjustment.

74. Check and adjust the front wheel alignment (see page 18-5).

75. Start the engine in the P or N position, and warm it up to normal operating temperature (the radiator fan comes on).

76. Turn off the engine, and check the ATF level (see page 14-203).

77. Perform the road test (see page 14-174).

78. Enter the radio and navigation anti-theft codes, and set the XM radio channel presets and the clock.

Protected by AR

Shift Lever Removal

1. Remove the center console (see page 20-77).
2. Shift the transmission into the R position.
3. Remove the nut securing the shift cable end.

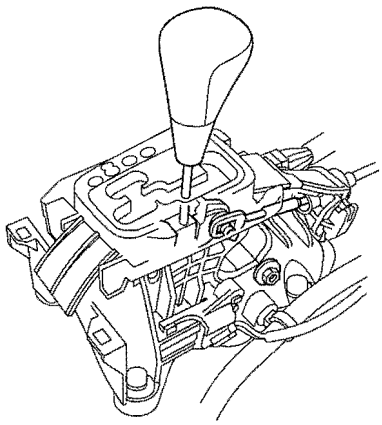

4. Press the holder lock release (A), and pull out the socket holder (B) to remove the shift cable (C) from the shift lever bracket base (D). Do not remove the shift cable by pulling on the shift cable guide (E).

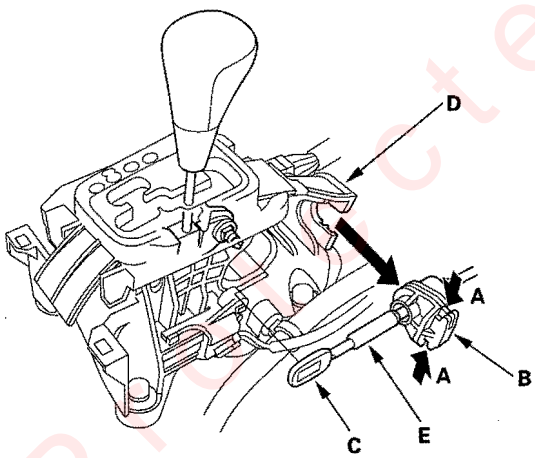

5. Disconnect shift lock solenoid connector (A) and transmission gear selection switch/park pin switch connector (B).

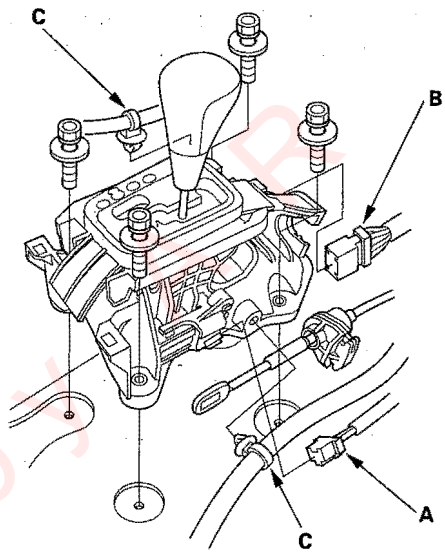

6. Remove the harness clamps (C).
7. Remove the shift lever assembly.

Protected by

Shift Lever Installation

1. Install the shift lever assembly.

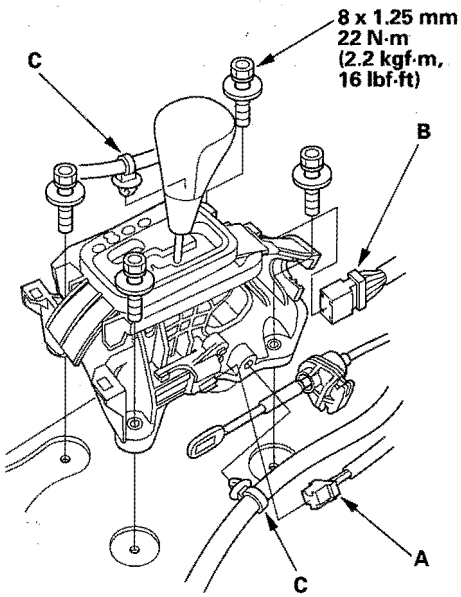

2. Connect the shift lock solenoid connector (A) and transmission gear selection switch/park pin switch connector (B), and install the harness clamps (C) on the shift lever bracket base.

3. Turn the ignition switch ON (II), and verify that the R position indicator comes on.

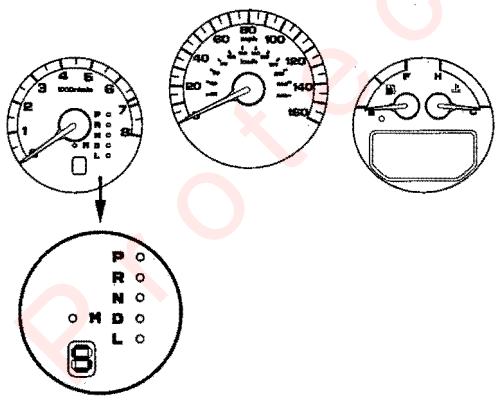

4. If necessary, push the shift cable until it stops, then release it. Pull the shift cable back one step so that the shift position is in R. Do not hold the shift cable guide (A) to adjust the shift cable (B).

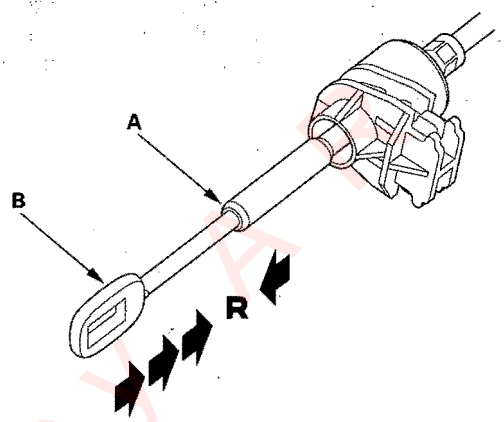

5. Turn the ignition switch OFF.

6. Place the shift lever in the R position, then insert a 6.0 x 100.0 mm (0.24 x 3.94 in.) pin (A) through the positioning hole (B) on the shift lever bracket base, through the positionng hole (C) on the shift lever, and into the positioning hole (D) on the shift lever bracket base. The shift lever is secured in the R position.

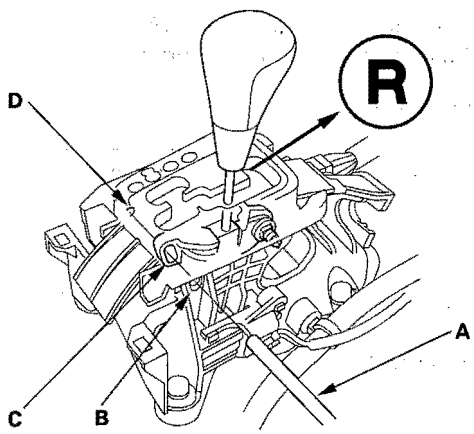

(cont'd)

Protected by A

Shift Lever Installation (cont'd)

7. Align the socket holder (A) on the shift cable (B) with the slot in the bracket base (C), then slide the holder into the base. Install the shift cable end (D) over the mounting stud (E) by aligning its square hole (F) with the square fitting (G) at the bottom of the stud. Push the holder until it snaps securely in place. Do not install the shift cable by holding the shift cable guide (H).

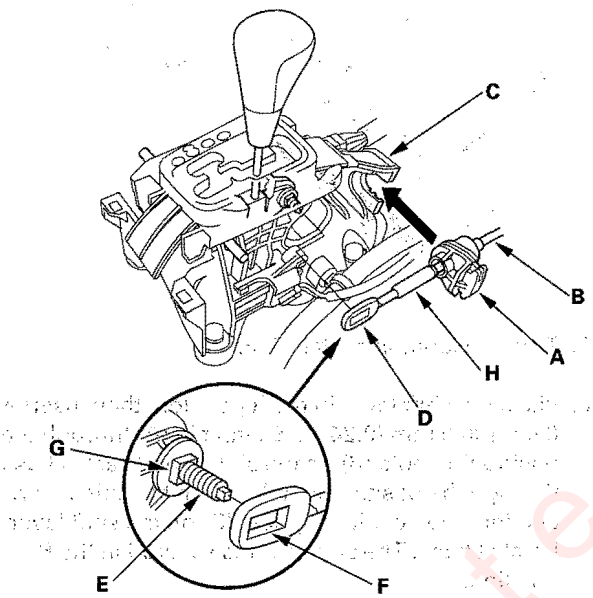

8. Verify that the shift cable end (A) is properly installed on the mounting stud (B).

Properly Installed:

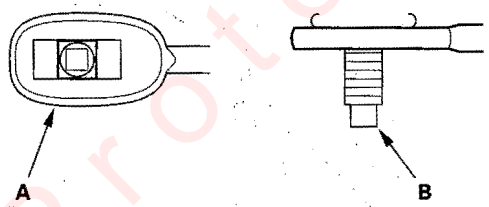

Improperly Installed:

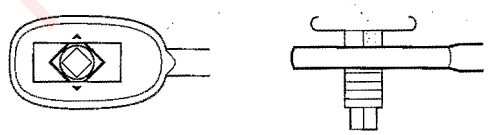

Cable end rides on the bottom of the mounting stud.

9. If improperly installed, remove the shift cable from the bracket base, and reinstall the shift cable. Do not install the shift cable end on the mounting stud while the shift cable is on the bracket base.

10. Install and tighten the nut.

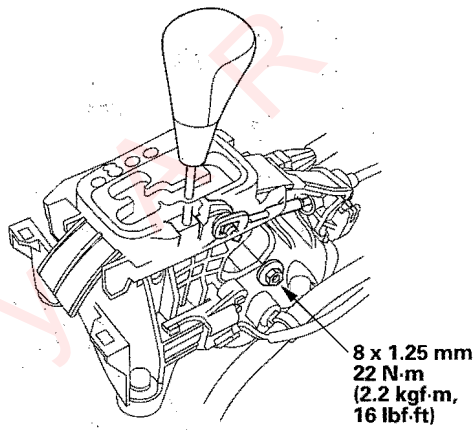

11. Remove the 6.0 mm (0.24 in.) pin that was installed to hold the shift lever.

12. Move the shift lever to each position, and verify that the A/T gear position indicator follows the transmission range switch.

13. Push the shift lock release, and verify that the shift lever releases.

14. Reinstall the center console (see page 20-77).

Protected by

Shift Lever Disassembly and Reassembly

Apply silicon grease to movable joints of the shift lock/reverse lock mechanism.

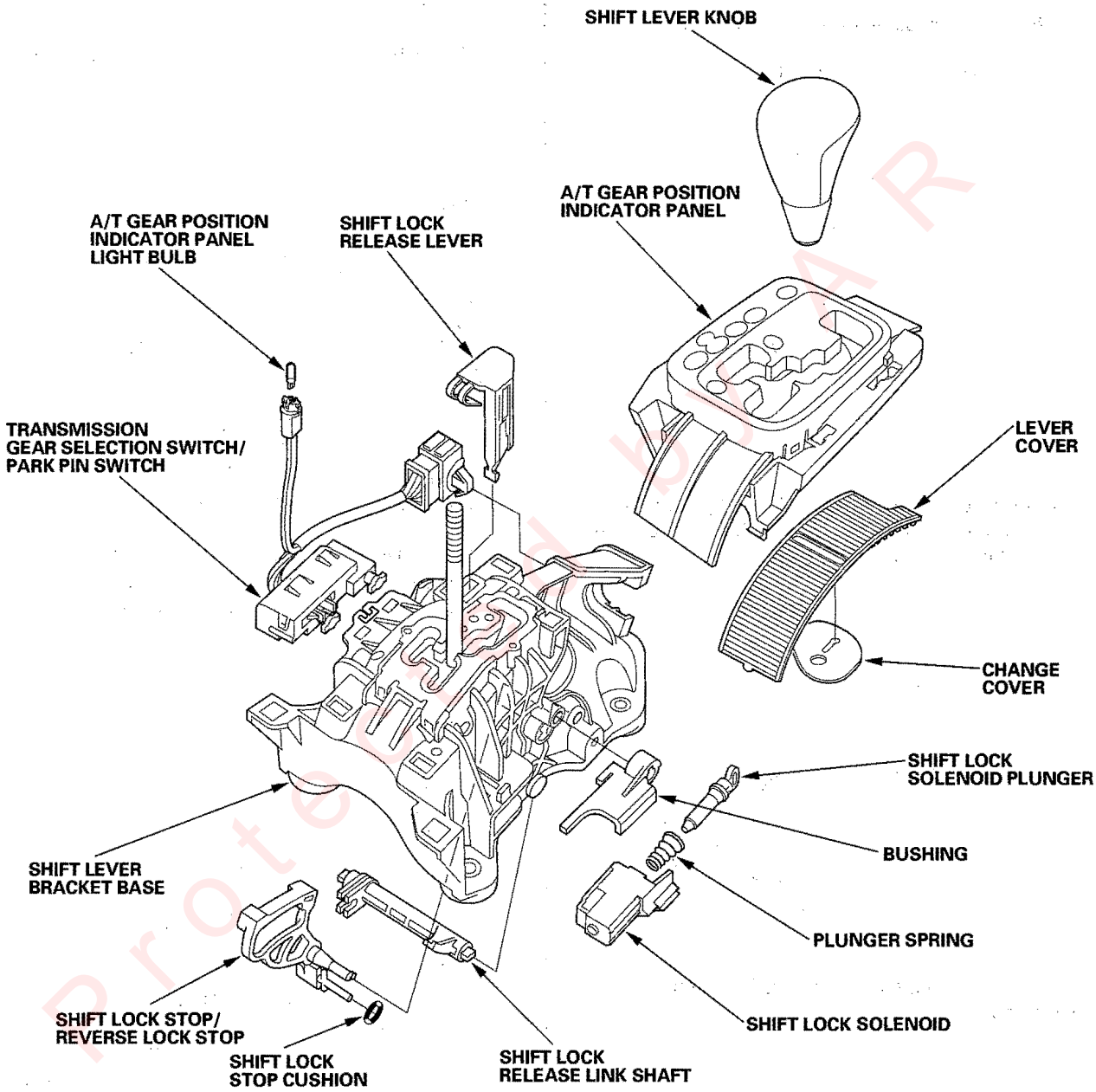

Protected by CARFAX

Shift Cable Replacement

1. Remove the center console (see page 20-77).
2. Shift the transmission into the R position.
3. Remove the nut securing the shift cable end.

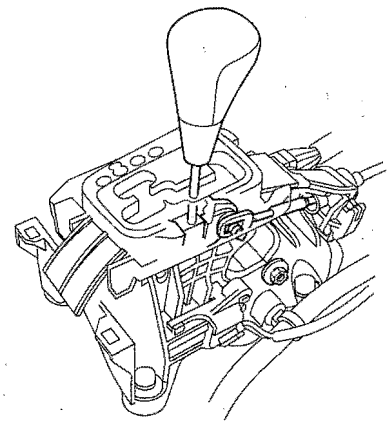

4. Press the holder lock release (A), and pull out the socket holder (B) to remove the shift cable (C) from the shift lever bracket base (D).

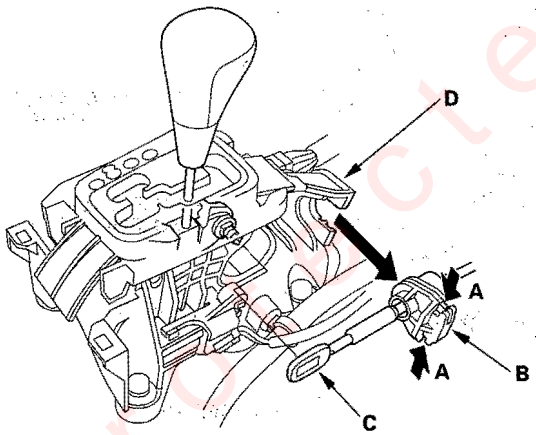

5. Raise the vehicle, and make sure it is securely supported.
6. Remove the heat shield under the shift cable grommet.
7. Remove the shift cable bracket (A) and grommet (B).

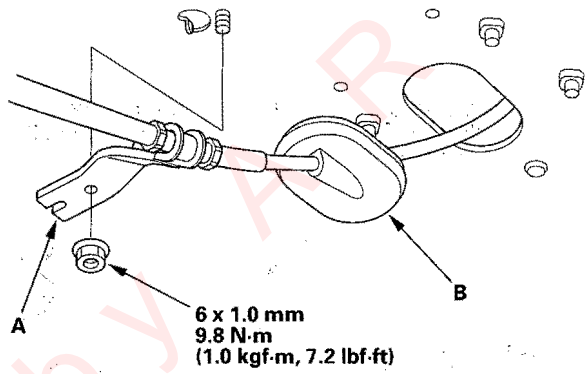

8. Remove the bolts securing the shift cable holder (A), then remove the shift cable cover (B).

   NOTE: To prevent damage to the control lever joint, remove the bolts securing the holder before removing the bolts securing the cover.

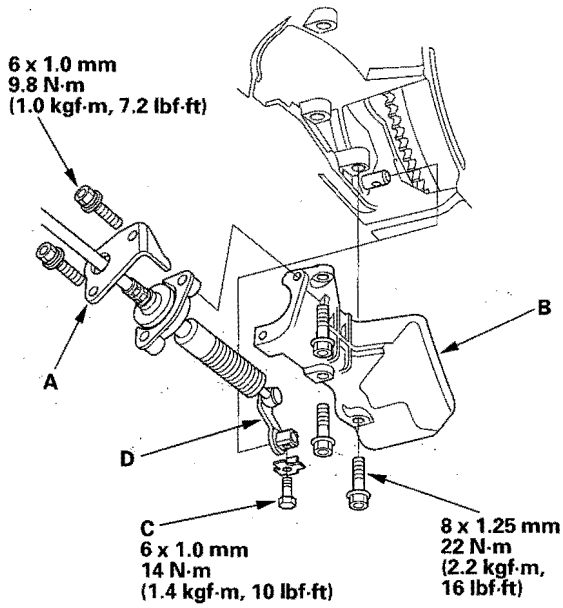

9. Remove the lock bolt (C) securing the control lever (D), then remove the shift cable and the control lever. Do not bend the shift cable excessively.

Protected by AR

10. Insert the new shift cable through the grommet hole. Do not bend the shift cable excessively.

11. Install the shift cable bracket on the body, then install the grommet.

12. Verify that the transmission is in the R position at the control lever.

13. Install the control lever on the control shaft. Do not bend the shift cable excessively.

14. Install the lock bolt with a new lock washer, then bend the lock washer tab against the bolt head.

15. Install the shift cable cover, then secure the shift cable holder on the cover with the bolts.

    NOTE: To prevent damage to the control lever joint, be sure install the shift cable holder after installing the shift cable cover to the torque converter housing.

16. Install the heat shield.

17. Turn the ignition switch ON (II), and verify that the R position indicator comes on.

18. If necessary, push the shift cable until it stops, then release it. Pull the shift cable back one step so that the shift position is in R. Do not hold the shift cable guide (A) to adjust the shift cable (B).

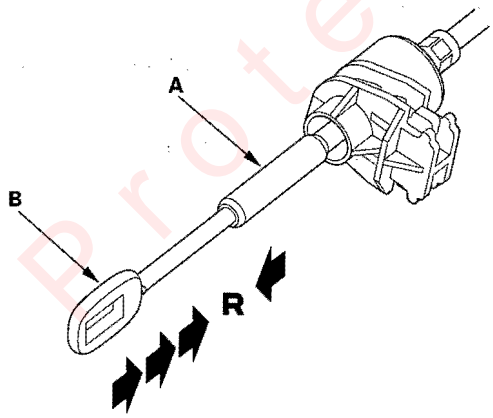

19. Turn the ignition switch OFF.

20. Place the shift lever in the R position, then insert a 6.0 x 100.0 mm (0.24 x 3.94 in.) pin (A) through the positioning hole (B) on the shift lever bracket base, through the positionng hole (C) on the shift lever, and into the positioning hole (D) on the shift lever bracket base. The shift lever is secured in the R position.

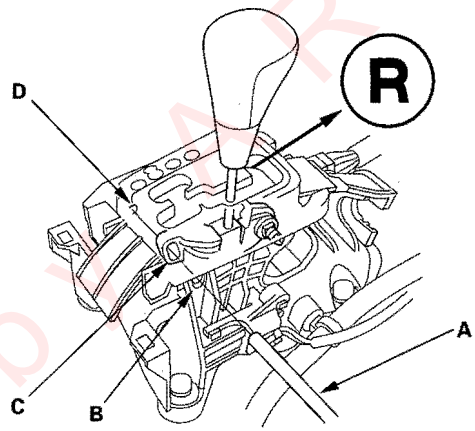

(cont'd)

Protected by MAR

Shift Cable Replacement (cont'd)

21. Align the socket holder (A) on the shift cable (B) with the slot in the bracket base (C), then slide the holder into base. Install the shift cable end (D) over the mounting stud (E) by aligning its square hole (F) with the square fitting (G) at the bottom of the stud. Push the holder until it snaps securely in place. Do not install the shift cable by holding the shift cable guide (H).

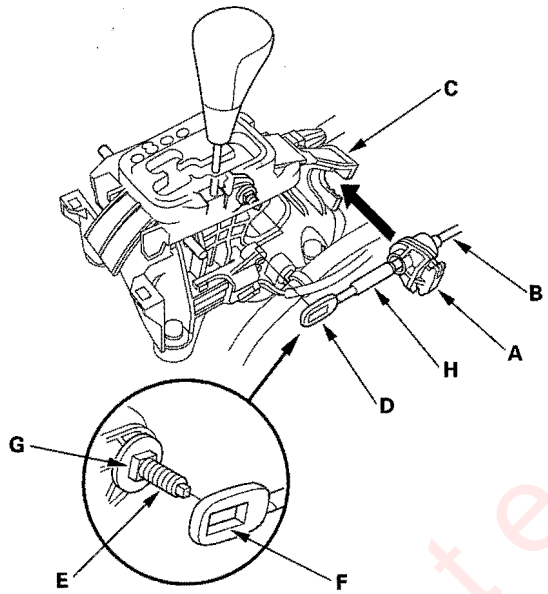

22. Verify that the shift cable end (A) is properly installed on the mounting stud (B).

Properly Installed:

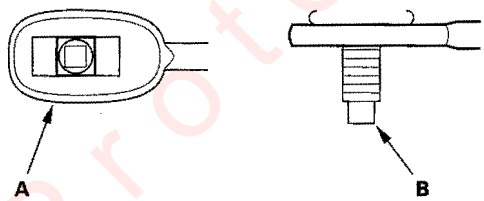

Improperly Installed:

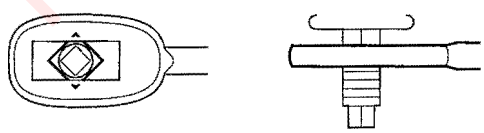

Cable end rides on the bottom of the mounting stud.

23. If improperly installed, remove the shift cable from the bracket base, and reinstall the shift cable. Do not install the shift cable end on the mounting stud while the shift cable is on the bracket base.

24. Install and tighten the nut.

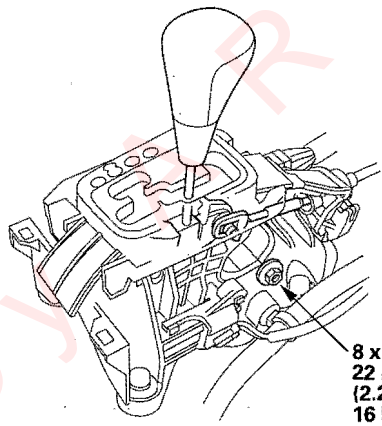

25. Remove the 6.0 mm (0.24 in.) pin that was installed to hold the shift lever.

26. Move the shift lever to each position, and verify that the A/T gear position indicator follows the transmission range switch.

27. Allow the front wheels to rotate freely.

28. Start the engine, and check the shift lever operation in all gears.

29. Push the shift lock release, and verify that the shift lever releases.

30. Reinstall the center console (see page 20-77).

Protected by CR

Shift Cable Adjustment

1. Remove the center console (see page 20-77).
2. Shift the transmission into the R position.
3. Remove the nut securing the shift cable end.

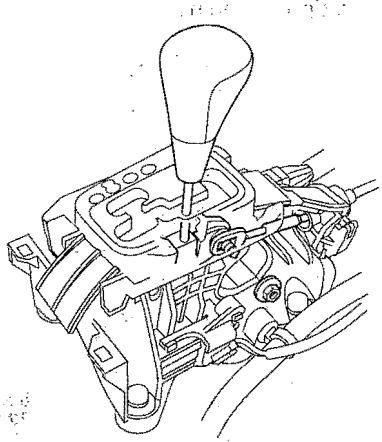

4. Press the holder lock release (A), and pull out the socket holder (B) to remove the shift cable (C) from the shift lever bracket base (D). Do not remove the shift cable by pulling the shift cable guide (E).

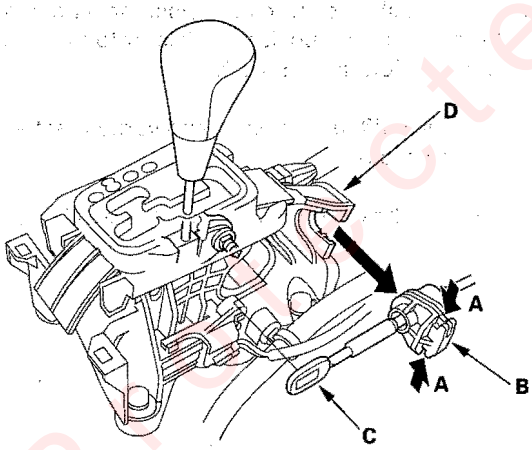

5. Push the shift cable until it stops, then release it. Pull the shift cable back one step so that the shift position is in R. Do not hold the shift cable guide (A) to adjust the shift cable (B).

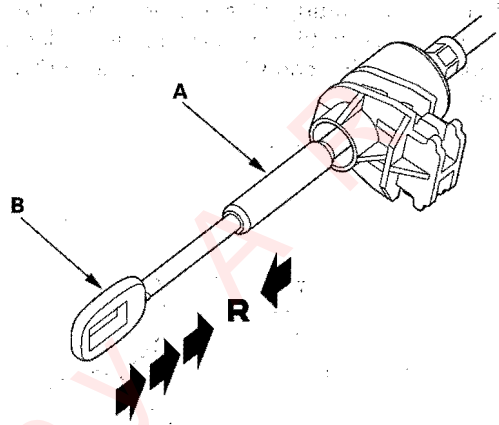

6. Turn the ignition switch ON (II), and verify that the R position indicator comes on.
7. Turn the ignition switch OFF.
8. Place the shift lever in the R position, then insert a 6.0 x 100.0 mm (0.24 x 3.94 in.) pin (A) through the positioning hole (B) on the shift lever bracket base, through the positionng hole (C) on the shift lever, and into the positioning hole (D) on the shift lever bracket base. The shift lever is secured in the R position.

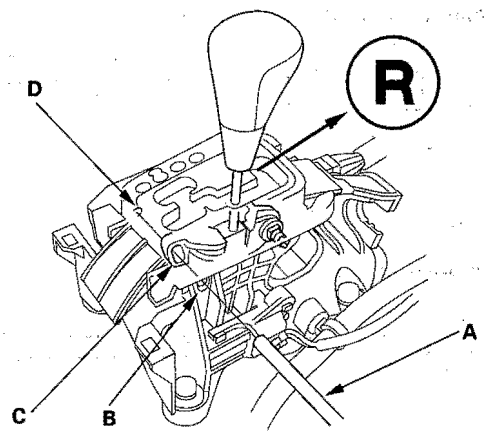

(cont'd)

Shift Cable Adjustment (cont'd)

9. Align the socket holder (A) on the shift cable (B) with the slot in the bracket base (C), then slide the holder into base. Install the shift cable end (D) over the mounting stud (E) by aligning its square hole (F) with the square fitting (G) at the bottom of the stud. Push the holder until it snaps securely in place. Do not install the shift cable by holding the shift cable guide (H).

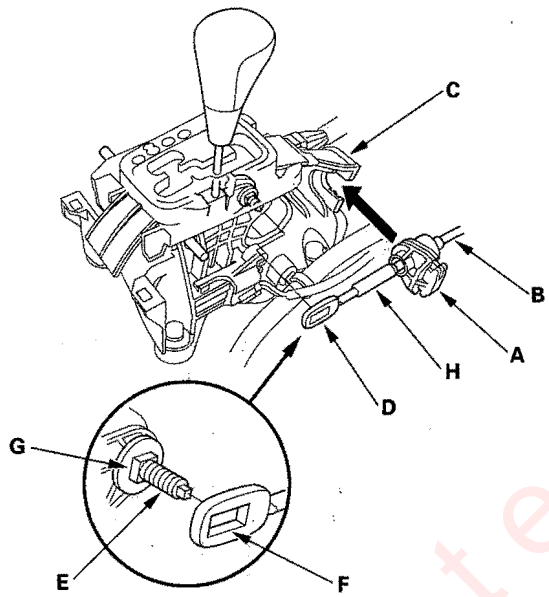

10. Verify that the shift cable end (A) is properly installed on the mounting stud (B).

Properly Installed:

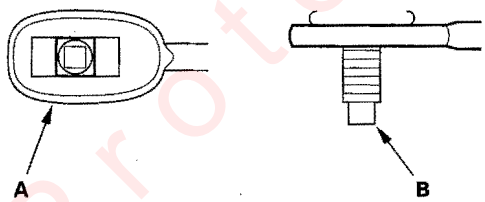

Improperly Installed:

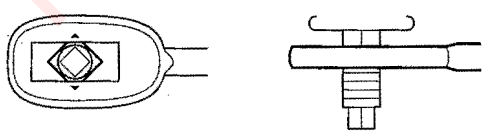

Cable end rides on the bottom of the mounting stud.

11. If improperly installed, remove the shift cable from the bracket base, and reinstall the shift cable. Do not install the shift cable end on the mounting stud while the shift cable is on the bracket base.

12. Install and tighten the nut.

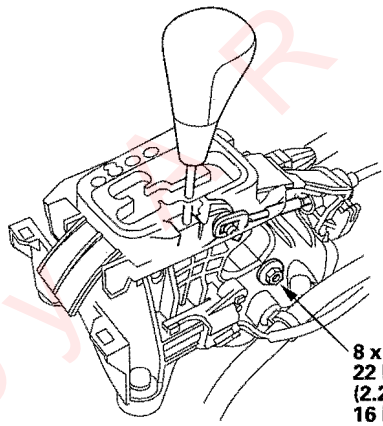

13. Remove the 6.0 mm (0.24 in.) pin that was installed to hold the shift lever.

14. Move the shift lever to each position, and verify that the A/T gear position indicator follows the transmission range switch.

15. Push the shift lock release, and verify that the shift lever releases.

16. Reinstall the center console (see page 20-77).

Protected by CR

A/T Gear Position Indicator

Component Location Index

A/T GEAR POSITION INDICATOR
Circuit Troubleshooting, page 14-239

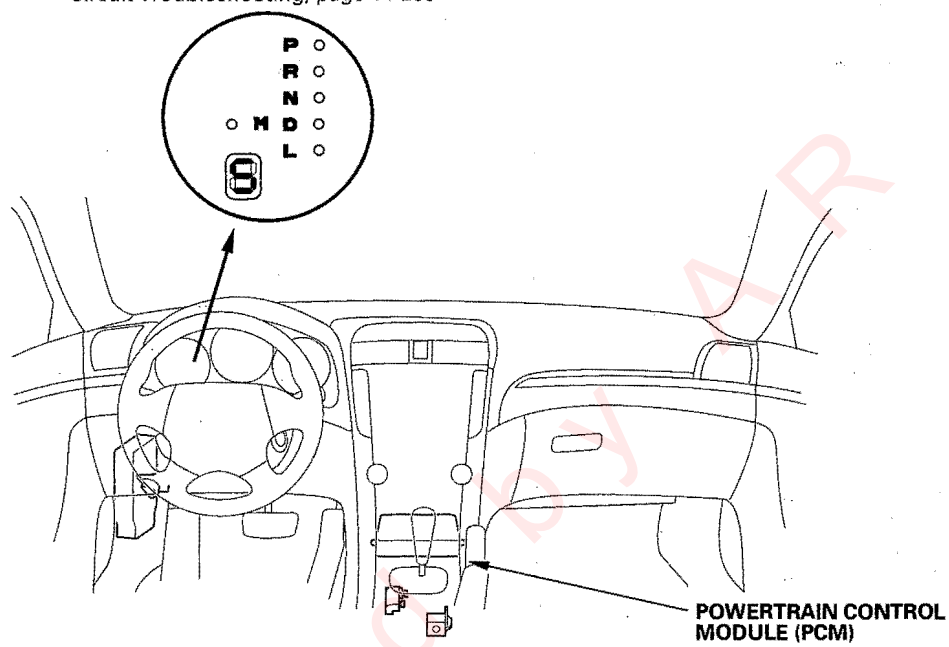

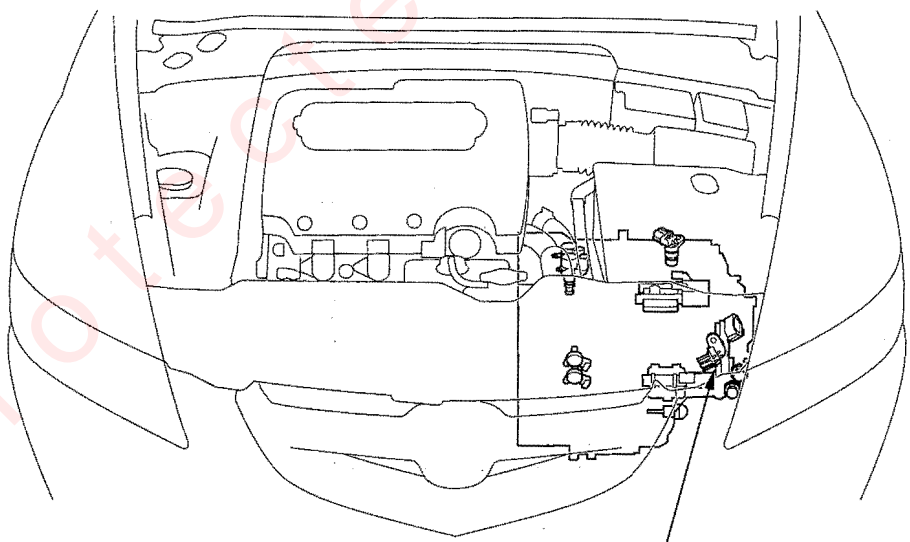

TRANSMISSION RANGE SWITCH
Test, page 14-240
Replacement, page 14-242

Protected by AR

A/T Gear Position Indicator

Circuit Diagram

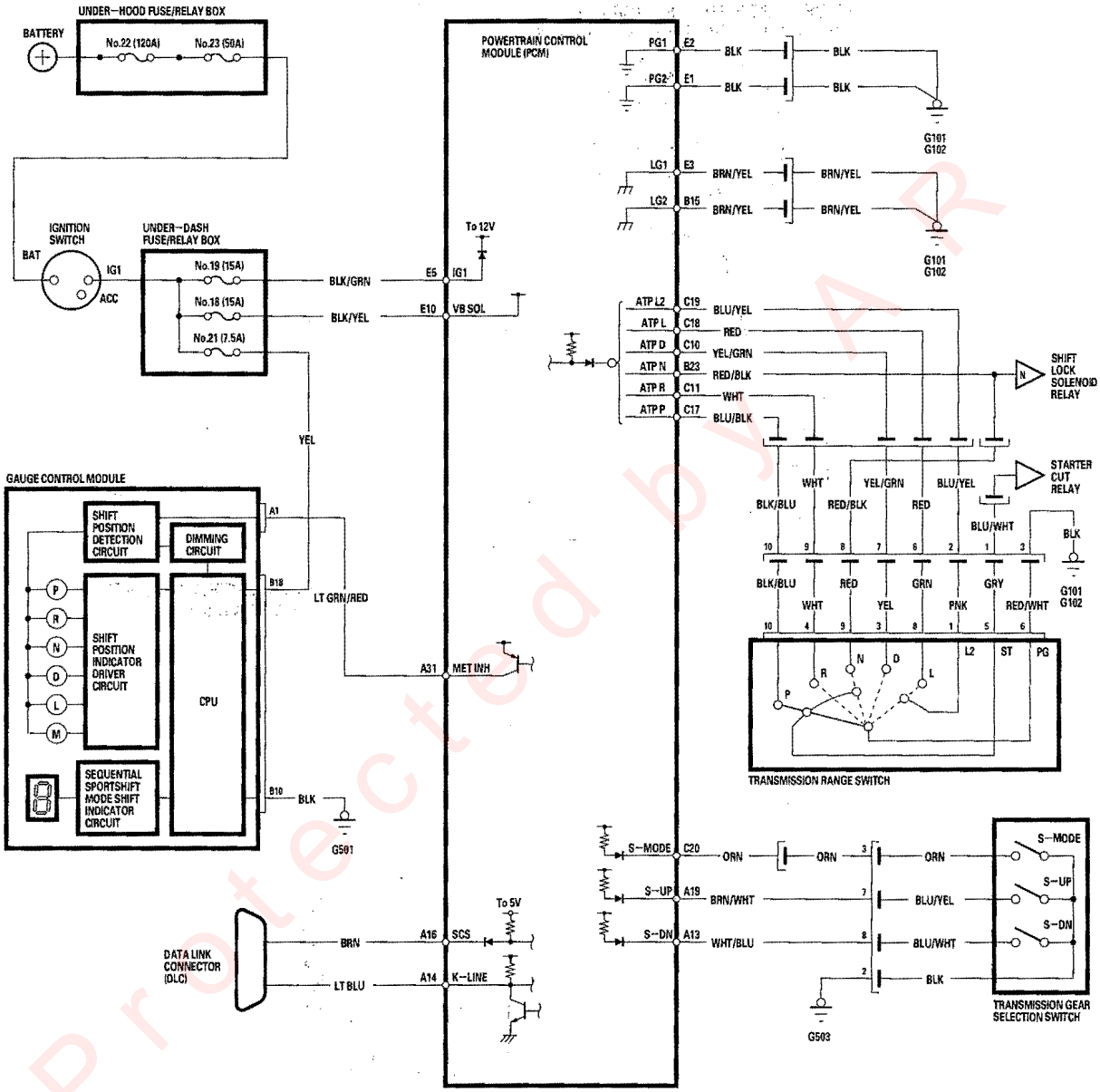

PCM Connector Terminal Locations

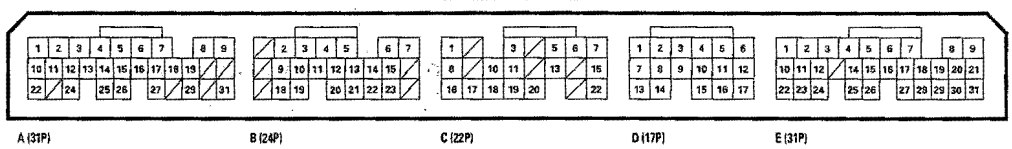

Protected by AR

A/T Gear Position Indicator Circuit Troubleshooting

Symptom: A/T gear position indicator does not indicate the shift lever position, the D indicator does not blink, and no transmission range switch, CAN line DTCs are indicated.

1. Check the indicator drive circuit and communication line in the gauge control module with the gauge control module self-diagnostic function (see page 22-268).

   Is the system OK?

   YES—Go to step 2.

   NO—Record the ODO data in the old gauge control module using the HDS, and replace the gauge control module (see page 22-265). Input the old ODO data in the new gauge control module with the HDS (see page 22-265).■

2. Remove the gauge control module (see page 22-265).

3. Turn the ignition switch ON.

4. Measure the voltage between gauge control module connector terminal A1 and body ground. The shift lever can be in any position.

GAUGE CONTROL MODULE CONNECTOR A (30P)

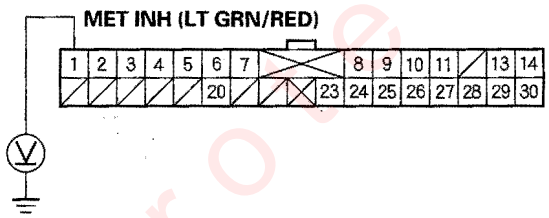

Wire side of female terminals

Is there battery voltage?

YES—Faulty A/T gear position indicator in the gauge control module, replace the gauge control module (see page 22-265).■

NO—Go to step 5.

5. Measure the voltage between PCM connector terminal A31 and body ground.

PCM CONNECTOR A (31P)

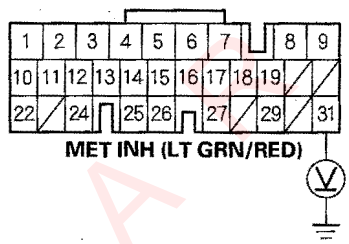

Wire side of female terminals

Is there battery voltage?

YES—Repair open or short in the wire between PCM connector terminal A31 and the gauge control module connector terminal A1.■

NO—Go to step 6.

6. Jump the SCS line with the HDS.

7. Disconnect PCM connector A (31P).

8. Check for continuity between PCM connector terminal A31 and body ground.

PCM CONNECTOR A (31P)

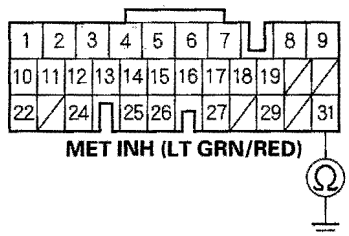

Wire side of female terminals

Is there continuity?

YES—Repair short to ground in the wire between PCM connector terminal A31 and the gauge control module connector terminal A1.■

NO—Check for loose terminal fit in the PCM connectors. If necessary, substitute a known-good PCM and recheck.■

Protected by A

Transmission Range Switch Test

1. Remove the transmission range switch harness connector (A) from the connector bracket (B), then disconnect the connector.

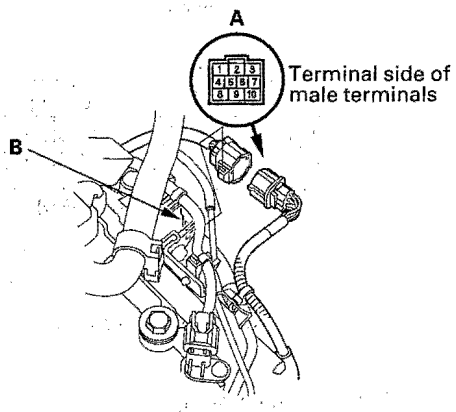

2. Check for continuity between terminals at the harness connector. There should be continuity between the terminals in the table for each switch position.
   - If the continuity is as shown, the switch is OK.
   - If the continuity is not as shown, go to step 3.

Position	Connector Terminal/Signal									
	1	2	3	4	5	6	7	8	9	10
	ATP NP	L2	GND	—	—	L	D	N	R	P
P	○		○							○
R			○						○	
N	○		○					○		
D			○				○			
L		○	○			○				

3. If the continuity between any of the terminals is incorrect, remove the transmission range switch cover, and disconnect the connector at the switch.

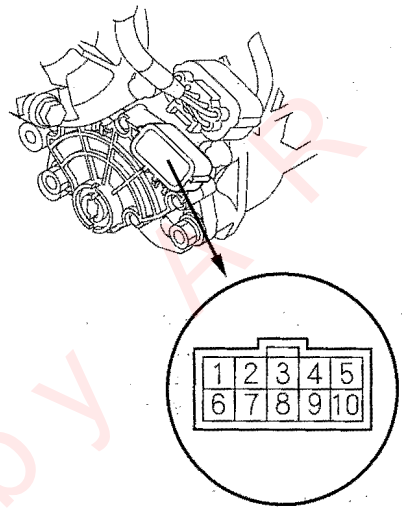

4. Check for continuity between terminals at the switch. There should be continuity between the terminals in the table for each switch position.

Position	Connector Terminal/Signal									
	1	2	3	4	5	6	7	8	9	10
	L2	—	D	R	ATP NP	GND	—	L	N	P
P					○	○				○
R				○		○				
N					○	○			○	
D			○			○				
L	○					○		○		

Protected by AR

5. If the transmission range switch continuity check is OK, replace the faulty transmission range switch harness.

6. If there is no continuity between any terminals, remove the transmission range switch, and check the end of the selector control shaft (A).

   Standard
   Selector Control Shaft Width (B):
   6.1—6.2 mm (0.240—0.244 in.)
   Selector Control Shaft End Gap (C):
   1.8—2.0 mm (0.07—0.08 in.)

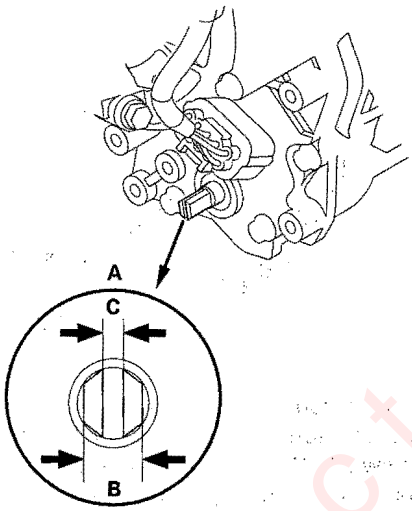

7. The measurement of the selector control shaft end is within the standard, replace the transmission range switch (see page 14-242). If the measurement is out of the standard, repair the selector control shaft end, and recheck the transmission range switch continuity.

Protected by AR

Transmission Range Switch Replacement

1. Raise the vehicle, and make sure it is securely supported.
2. Shift to the N position.
3. Remove the transmission range switch cover.

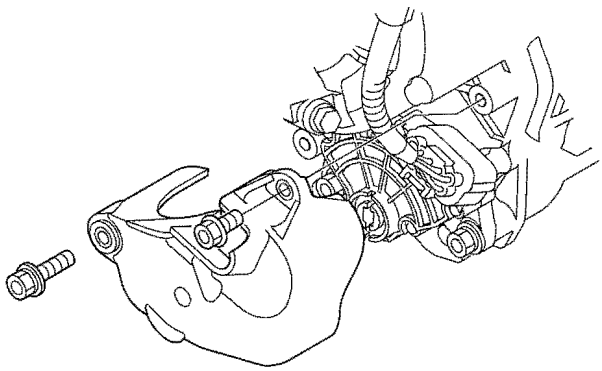

4. Disconnect the transmission range switch connector.

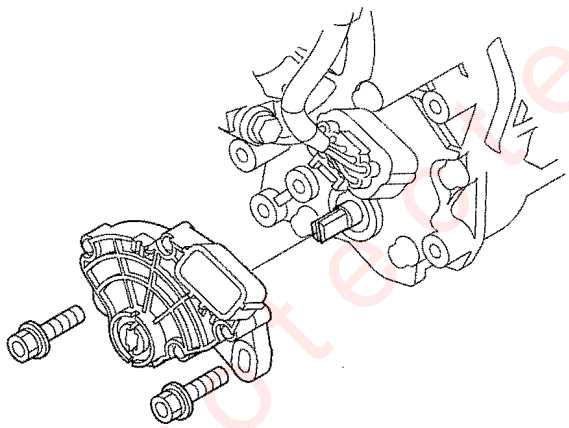

5. Remove the transmission range switch.
6. Make sure the selector control shaft is in the N position. If necessary, move the shift lever to the N position.

   NOTE: Do not use the selector control shaft to adjust the shift position. If the selector control shaft tips are squeezed together it will cause a faulty signal or position due to play between the selector control shaft and the switch. The clearance (A) between selector control shaft tips is 2.0 mm (0.08 in.).

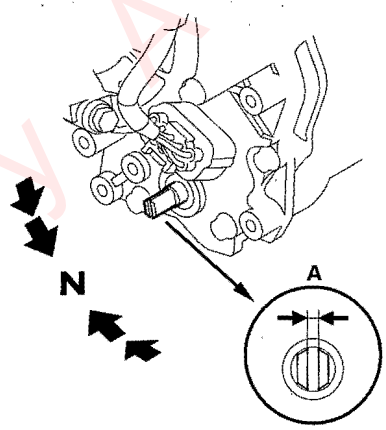

7. Align the cutouts (A) on the rotary-frame with the neutral positioning cutouts (B) on the transmission range switch (C), then put a 2.0 mm (0.08 in.) feeler gauge blade (D) in the cutouts to hold the switch in the N position.

   NOTE: Be sure to use a 2.0 mm (0.08 in.) blade or equivalent to hold the switch in the n position.

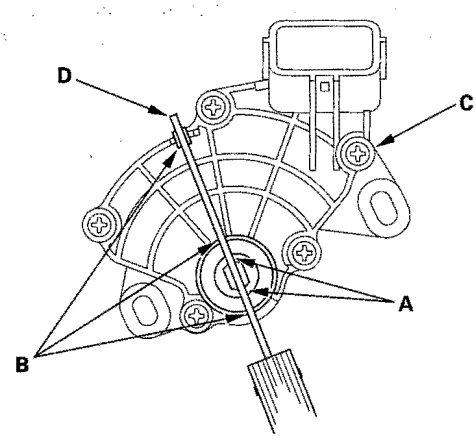

Protected by A

8. Install the transmission range switch (A) gently on the selector control shaft (B) while holding it in the N position with the 2.0 mm (0.08 in.) blade (C).

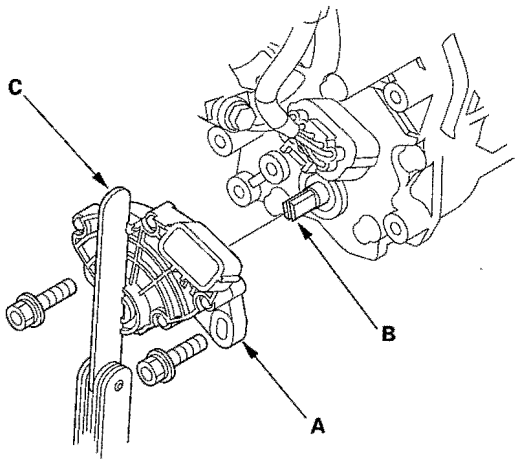

9. Tighten the bolts on the transmission range switch while you continue to hold the N position. Do not move the transmission range switch when tightening the bolts. Remove the feeler gauge.

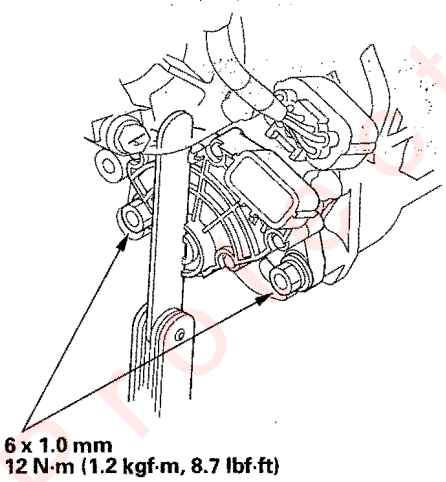

10. Connect the connector securely.
11. Turn the ignition switch ON (II). Move the shift lever through all positions, and check the transmission range switch synchronization with the A/T gear position indicator.
12. Check that the engine will start in P and N positions, and will not start in any other shift lever position.
13. Check that the back-up lights come on when the shift lever is in R position.
14. Allow the front wheels to rotate freely, then start the engine, and check the shift lever operation.
15. Install the transmission range switch cover (A).

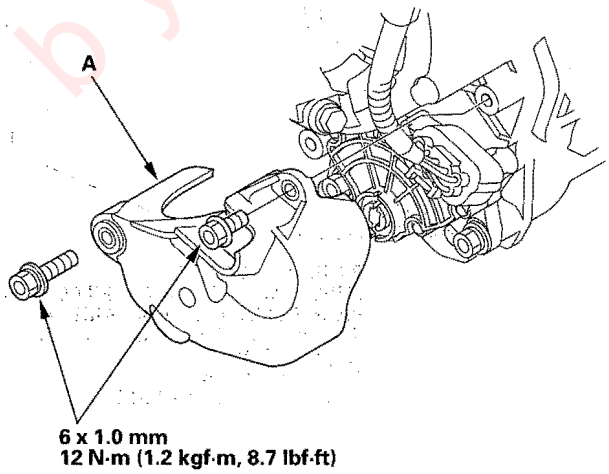

Protected by A

A/T Interlock System

Component Location Index

STEERING LOCK ASSEMBLY
KEY INTERLOCK SOLENOID
Key Interlock System Circuit Troubleshooting, page 14-248
Key Interlock Solenoid Test, page 14-249

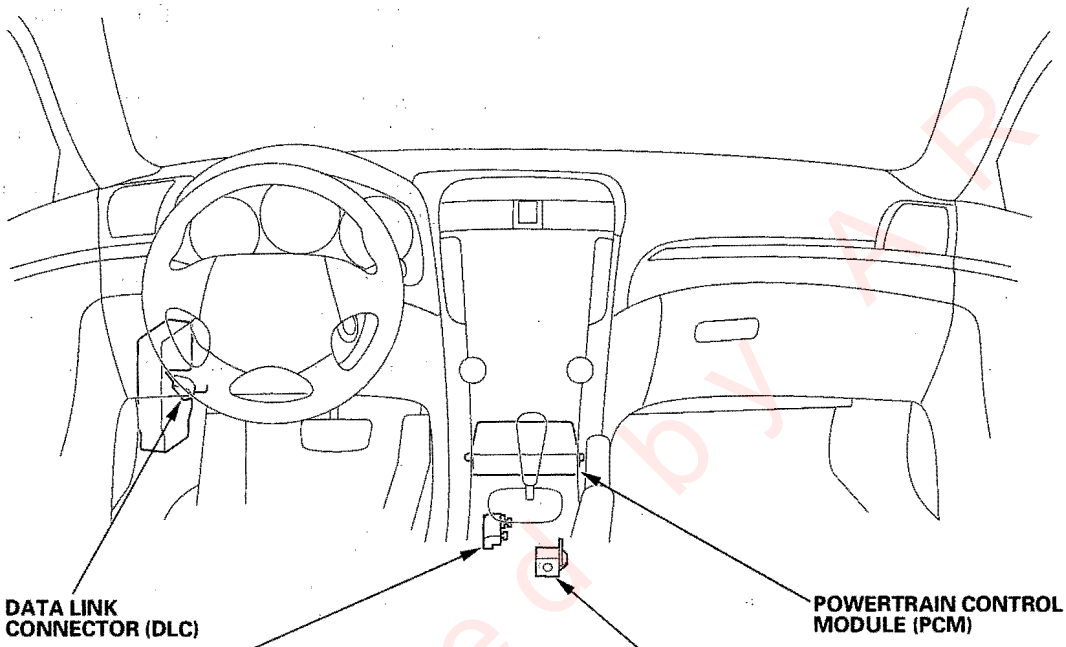

DATA LINK CONNECTOR (DLC)

PARK PIN SWITCH (TRANSMISSION GEAR SELECTION SWITCH/ PARK PIN SWITCH ASSEMBLY)
Key Interlock System Circuit Troubleshooting, page 14-248
Test, page 14-251
Replacement, page 14-251

POWERTRAIN CONTROL MODULE (PCM)

SHIFT LOCK SOLENOID
Shift Lock System/Reverse Lock System Circuit Troubleshooting, page 14-246
Test, page 14-250
Replacement, page 14-250

Protected by AR

Circuit Diagram

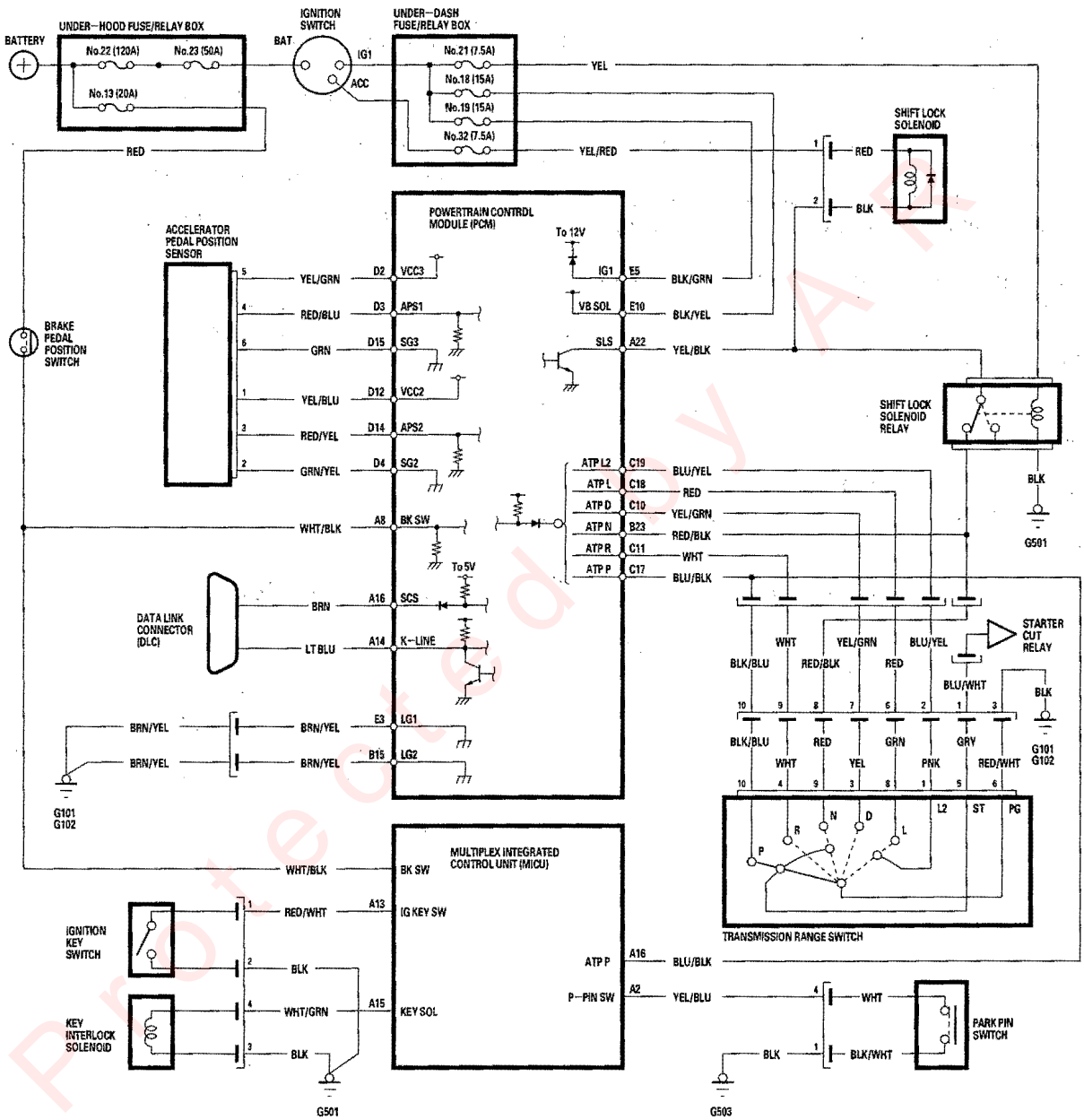

PCM Connector Terminal Locations

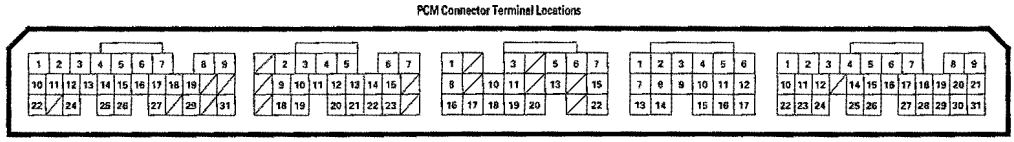

A (31P) B (24P) C (22P) D (17P) E (31P)

Protected by A R

Shift Lock System/Reverse Lock System Circuit Troubleshooting

1. Press the brake pedal.

   Are the brake lights ON?

   YES—Go to step 2.

   NO—Repair faulty brake light circuit.■

2. Connect the HDS to the DLC. Check engine speed and accelerator pedal position in the A/T data list.

   Is the engine speed at idle, and APS1 about 0.5 V and APS2 about 0.2 V?

   YES—Go to step 3.

   NO—Repair engine speed or accelerator pedal position input.■

3. Select SHIFT LOCK SOL TEST in MISC. TEST MENU, then carry out shift lock solenoid function test.

   Dose the shift lock solenoid work properly?

   YES—System circuit is OK. Check the shift lock mechanism, if necessary.■

   NO—Go to step 4.

4. Remove the center console (see page 20-77).

5. Disconnect the shift lock solenoid connector.

6. Turn the ignition switch ON (II).

7. Measure the voltage between No. 1 terminal of the shift lock solenoid connector and body ground.

SHIFT LOCK SOLENOID CONNECTOR

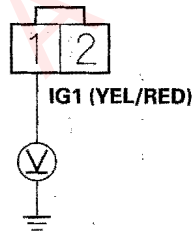

Wire side of female terminals

Is there battery voltage?

YES—Go to step 8.

NO—Check for blown No. 32 fuse in the under-dash fuse/relay box. If the fuse is OK, repair open in the wire between the shift lock solenoid connector and the under-dash fuse/relay box.■

Protected by MR

8. Shift the shift lever into the P position, and press the brake pedal. Do not press the accelerator.

9. Measure the voltage between shift lock solenoid connector terminals while pressing the brake pedal.

SHIFT LOCK SOLENOID CONNECTOR

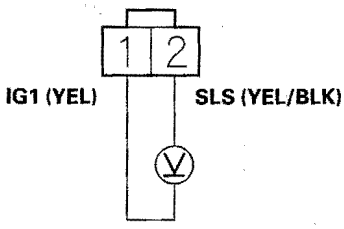

Wire side of female terminals

Is there battery voltage?

YES—Check the shift lock mechanism. If the mechanism is OK, replace the shift lock solenoid (see page 14-250).■

NO—Check for poor or loose PCM connector terminal A22 at the PCM, and check for an open in the wire between PCM connector terminal A22 and shift lock solenoid connector. If the connection and wire are OK, substitute a known-good PCM and recheck.■

Protected by AR

Key Interlock System Circuit Troubleshooting

SRS components are located in this area. Review the SRS component locations (see page 23-11), and the precautions and procedures (see page 23-13), in the SRS before performing repairs or service.

1. Turn the ignition switch to ACC (I). The shift lever must be in the P position.
2. Disconnect the steering lock assembly connector.
3. Check if the ignition key can be moved to LOCK (0) position, and remove the key from the cylinder.

   Is the ignition key able to move to the LOCK (0) position, and then removed?

   YES—Go to step 4.

   NO—Replace the ignition key cylinder/steering lock assembly (see page 17-27).■
4. Turn the ignition switch to ACC (I) or ON (II), and shift to the N position.
5. Check for the voltage between the No. 4 terminal of the steering lock assembly connector and body ground.

STEERING LOCK ASSEMBLY CONNECTOR

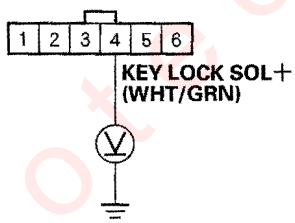

Wire side of female terminals

Is there battery voltage?

YES—Go to step 6.

NO—Check for an open in with (WHT/GRN) wire between the MICU and the steering lock assembly connector. If the wire is OK, substitute a known-good multiplex integrated control unit and recheck.■

6. Turn the ignition switch to ACC (I), and shift to the P position.
7. Remove the center console (see page 20-77).
8. Disconnect the park pin switch connector.
9. Check for continuity between park pin switch connector terminals No. 1 and No. 4 while pushing the button of the shift lever in, and when released.

TRANSMISSION GEAR SELECTION SWITCH/ PARK PIN SWITCH CONNECTOR

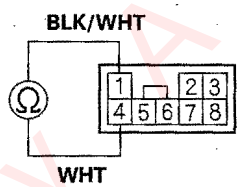

Terminal side of male terminals

Is there continuity when pushing the button in, and no continuity when it's released?

YES—Check for an open in the wire between the multiplex integrated control unit and the park pin switch connector. If the wire is OK, replace the multiplex integrated control unit.■

NO—Replace the park pin switch (see page 14-251).■

Protected by AR

Key Interlock Solenoid Test

SRS components are located in this area. Review the SRS component locations (see page 23-11), and the precautions and procedures (see page 23-13), in the SRS before performing repairs or service.

1. Remove the driver's dashboard lower cover (see page 20-82). and lower steering column cover.
2. Disconnect steering lock assembly connector.
3. Insert the ignition key in the key cylinder, then turn the ignition key to ACC (I).
4. Connect the battery positive terminal to steering lock assembly connector terminal No. 4, and connect the battery negative terminal to No. 3 terminal. Make sure that the ignition key cannot be turned to LOCK (0) position. Release the battery terminals, and make sure that the key can be turned to LOCK (0) position and removed from the cylinder.
5. If the key interlock solenoid works improperly, replace the ignition key cylinder/steering lock assembly (see page 17-27).

STEERING LOCK ASSEMBLY CONNECTOR

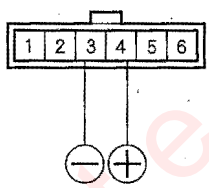

Terminal side of male terminals

Protected by AR

Shift Lock Solenoid Test

1. Connect the HDS to DLC.
2. Select SHIFT LOCK SOL TEST in MISC. TEST MENU with the HDS.
3. Carry out shift lock solenoid function test: Check that the shift lever can be moved from the P position when SOLENOID ON. Move the shift lever back to the P position, and make sure it locks with SOLENOID OFF.
4. Check that the shift lock releases when the shift lock release is pushed, and check that it locks when the shift lock release is released.
5. If the shift lock solenoid does not work properly, perform shift lock system troubleshooting (see page 14-246).

Shift Lock Solenoid Replacement

1. Remove the center console (see page 20-77).
2. Release the tab (A) retaining the shift lock solenoid.

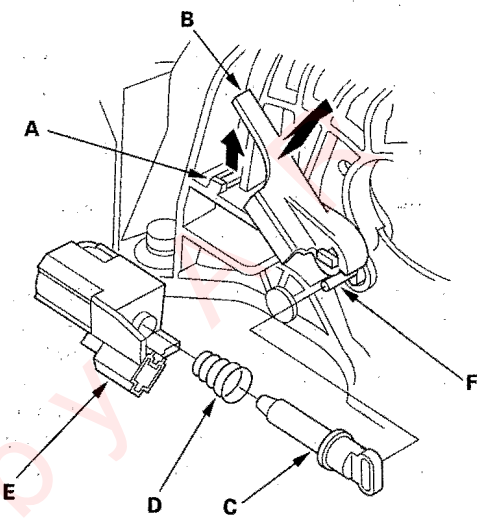

3. Raise the shift lock solenoid bushing (B) just enough to slide the shift lock solenoid out.
4. Install the shift lock solenoid plunger (C) and plunger spring (D) in the new shift lock solenoid (E).
5. Apply silicon grease to joint of the shift lock solenoid plunger, if necessary.
6. Install the new shift lock solenoid by aligning the joint of the shift lock solenoid plunger with the tip of the shift lock stop (F).
7. Install the center console (see page 20-77).

Protected by

Park Pin Switch Test

1. Remove the center console (see page 20-77).
2. Disconnect transmission gear selection switch/park pin switch connector.

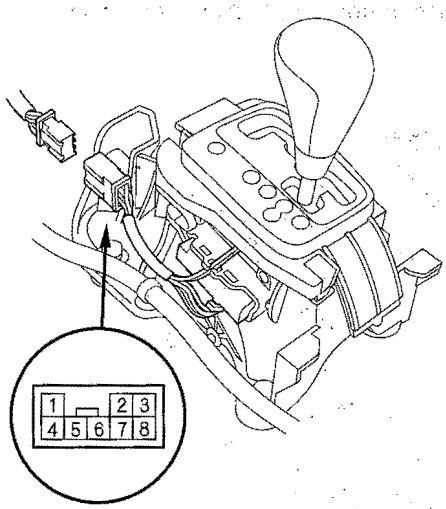

Terminal side of male terminals

3. Shift the shift lever into the P position, then check for continuity between connector terminals No. 1 and No. 4. There should be no continuity.
4. Shift out of the P position, and check for continuity between terminals No. 1 and No. 4. There should be continuity.
5. If the park pin switch is faulty, replace it.
6. Install the center console (see page 20-77).

Park Pin Switch Replacement

1. Remove the center console (see page 20-77).
2. Disconnect transmission gear selection switch/park pin switch connector (A), then remove the connector from the shift lever bracket base.

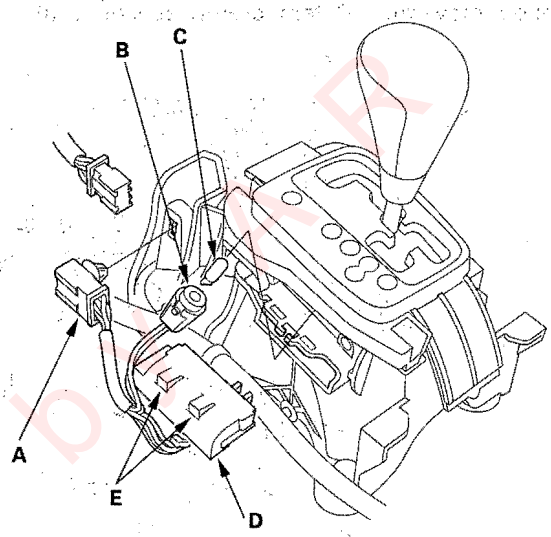

3. Remove the A/T gear position indicator panel light bulb socket (B), then remove the bulb (C) from the socket.
4. Remove the transmission gear selection switch/park pin switch (D) by releasing the lock tabs (E).
5. Install the new switch assembly in the shift lever bracket base.
6. Install the bulb in the socket, then install the socket in the bracket base.
7. Install the switch connector on the bracket base, then connect the connector.
8. Install the center console (see page 20-77).

Protected by

End Cover, 3rd Gear, Idler Gear, and 3rd Clutch Removal

Special Tools Required
- Mainshaft holder 07GAB-PF50101 or 07GAB-PF50100
- Adjustable bearing puller, 25—40 mm 07736-A01000B or 07736-A01000A

1. Remove the ATF temperature sensor connector (A) from the connector bracket (B), then disconnect the connector, and remove the ATF temperature sensor (C) (three bolts).

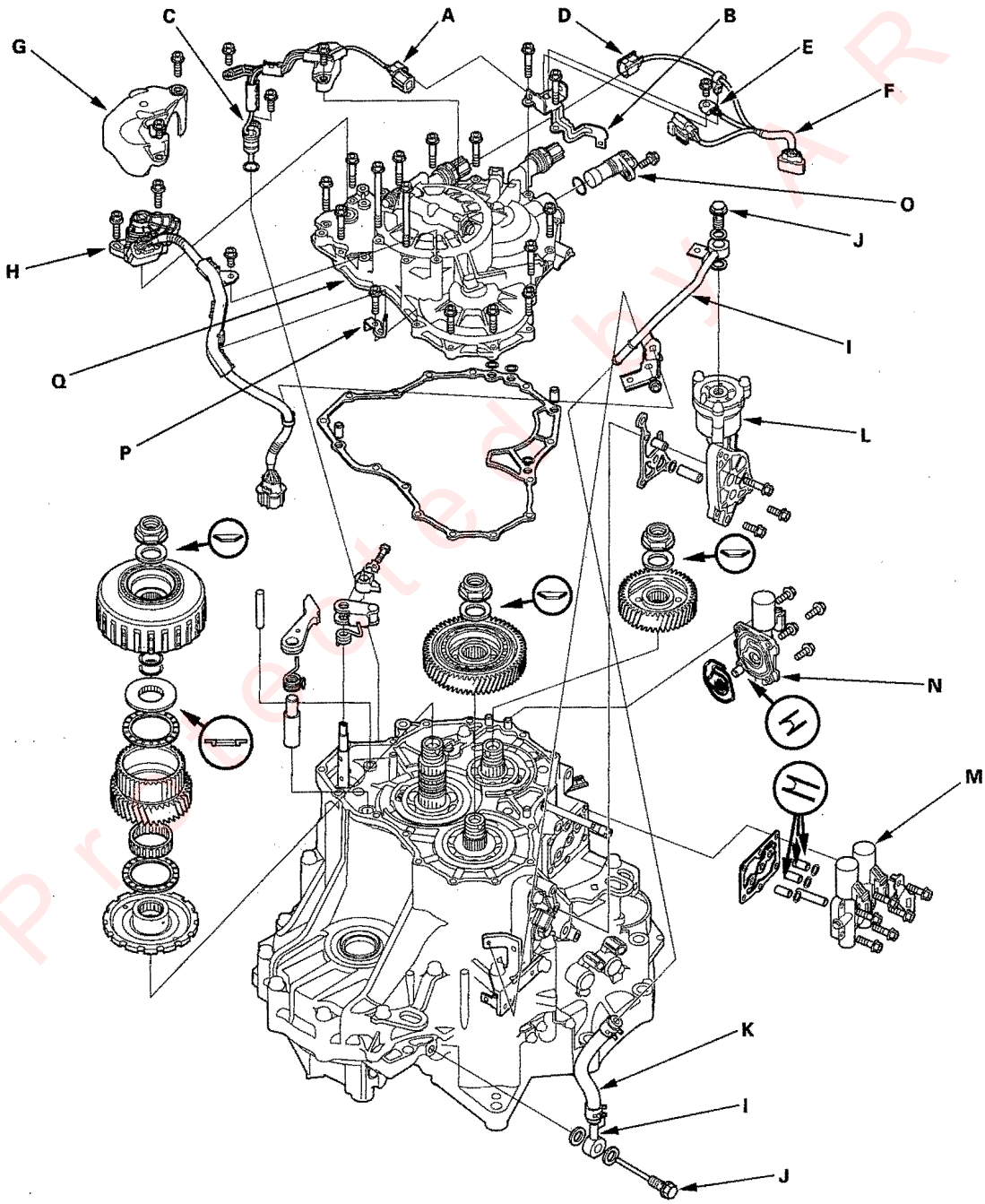

Protected by AR

2. Disconnect the 3rd clutch transmission fluid pressure switch (D), remove the ground terminal (E), then remove the sensor subharness (F).

3. Remove the transmission range switch cover (G), then remove the transmission range switch (H) (three bolts).

4. Remove the 6 mm bolt securing the harness clamp bracket on the ATF line (I), and remove the line bolts (J), then remove the ATF line and sealing washers. Remove the ATF hose (K) from the ATF line if necessary.

5. Remove the ATF passage body (L), ATF pipe, O-ring, dowel pin, and gasket (three bolts).

6. Remove the A/T clutch pressure control solenoid valves A and B (M), clamp bracket, ATF pipes, O-rings, and gasket (six bolts).

7. Remove the A/T clutch pressure control solenoid valve C (N), ATF pipe, and gasket (four bolts).

8. Remove the input shaft (mainshaft) speed sensor (O).

9. Remove the 16 bolts securing the end cover, connector bracket (B), harness cover bracket (P), then remove the end cover (Q), two dowel pins, O-rings, and gasket.

10. Slip the special tool onto the mainshaft.

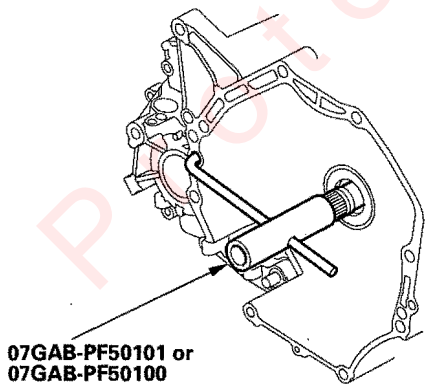

07GAB-PF50101 or
07GAB-PF50100

11. Engage the park pawl with the park gear.

12. Cut the lock tab (A) of each shaft locknut (B) using a chisel (C). Then remove the locknuts and conical spring washers from each shaft.

NOTE:
- Countershaft and secondary shaft locknuts have left-hand threads.
- Keep all of the chiseled particles out of the transmission.
- Clean the old locknuts; they are used to install the press fit mainshaft 3rd gear, secondary shaft idler gear, and 3rd clutch assembly on the countershaft.

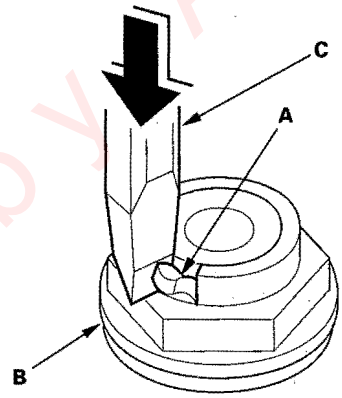

13. Remove the special tool from the mainshaft.

(cont'd)

Protected by AR

End Cover, 3rd Gear, Idler Gear, and 3rd Clutch Removal (cont'd)

14. Remove the 3rd clutch assembly using the special tool and a commercially available 3/8-16" slide hammer (A).

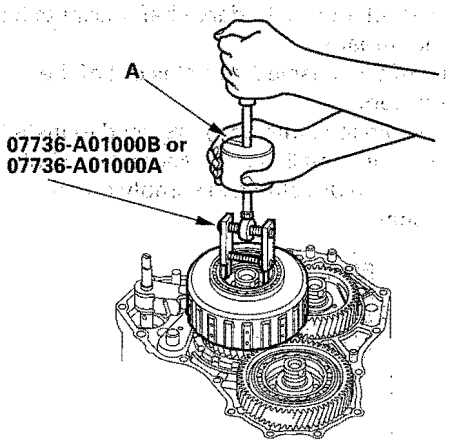

15. Remove the splined washer, thrust needle bearing, countershaft 3rd gear, needle bearing, and thrust needle bearing from the countershaft.

16. Remove the mainshaft 3rd gear (A), secondary shaft idler gear (B), and park gear (C) with a puller (D).

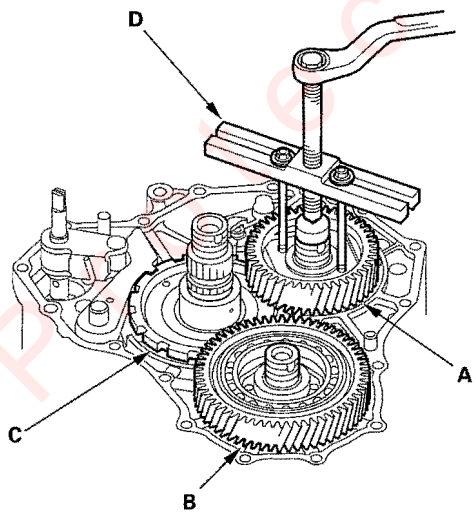

17. Remove the park pawl, park pawl spring, park pawl shaft, and stop shaft.

18. Remove the park lever from the control shaft.

Park Lever Stop Inspection and Adjustment

1. Set the park lever (A) in the P position.

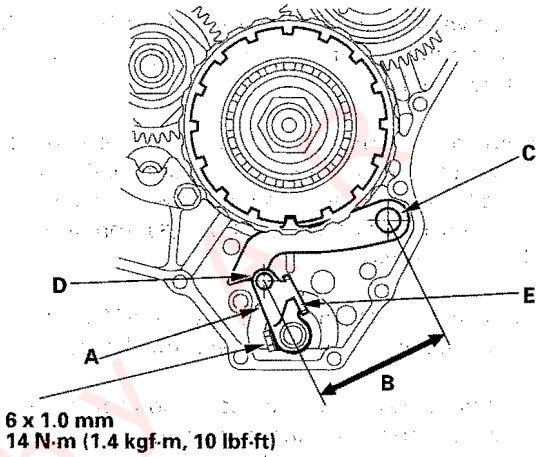

2. Measure the distance (B) between the park pawl shaft (C) and the park lever roller pin (D).

   Standard: 84.6–85.6 mm (3.33–3.37 in.)

3. If the measurement is out of tolerance, select and install the appropriate park lever stop (E) from the table.

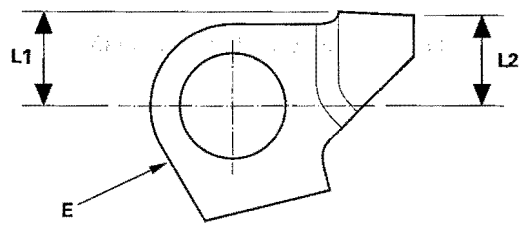

PARK LEVER STOP

Mark	Part Number	L1	L2
1	24537-PA9-003	11.00 mm (0.433 in.)	11.00 mm (0.433 in.)
2	24538-PA9-003	10.80 mm (0.425 in.)	10.65 mm (0.419 in.)
3	24539-PA9-003	10.60 mm (0.417 in.)	10.30 mm (0.406 in.)

4. After replacing the park lever stop, make sure the distance is within tolerance.

Protected by

Control Shaft Oil Seal Replacement

Special Tools Required
- Driver 07749-0010000
- Attachment, 22 x 24 mm 07746-0010800

1. Remove the oil seal (A) from the end cover (B).

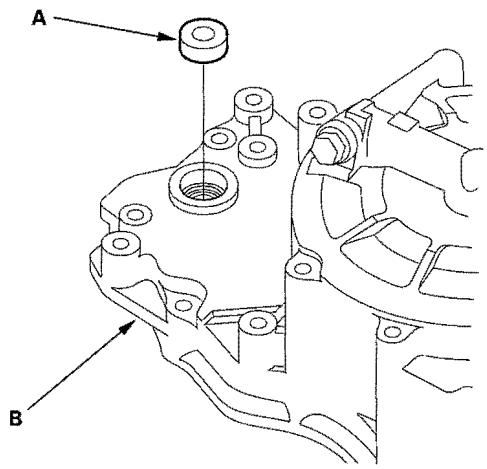

2. Install the new oil seal flush to the end cover with the special tools.

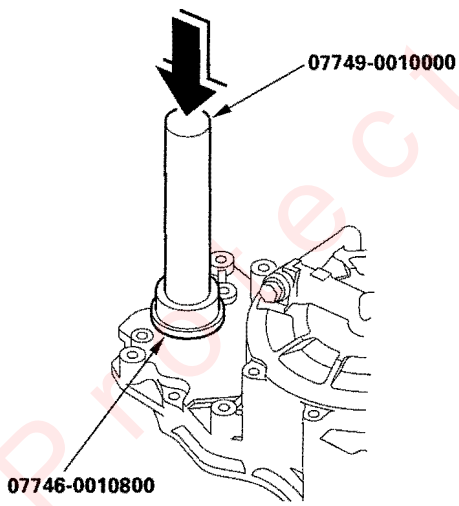

Control Shaft Bearing Replacement

Special Tools Required
- Driver 07749-0010000
- Attachment, 22 x 24 mm 07746-0010800

1. Remove the oil seal from the end cover, then remove the bearing.

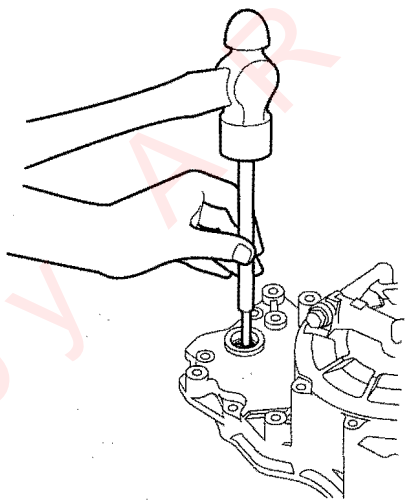

2. Install the new bearing flush to the end cover with the special tools.

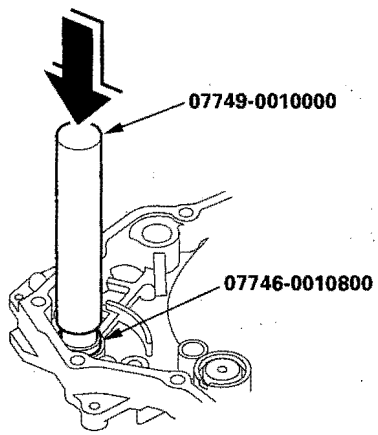

3. Install the new oil seal.

Protected by AR

ATF Feed Pipe Replacement

1. Remove the snap rings (A), ATF feed pipes (B) and feed pipe flanges (C) from the end cover (D).

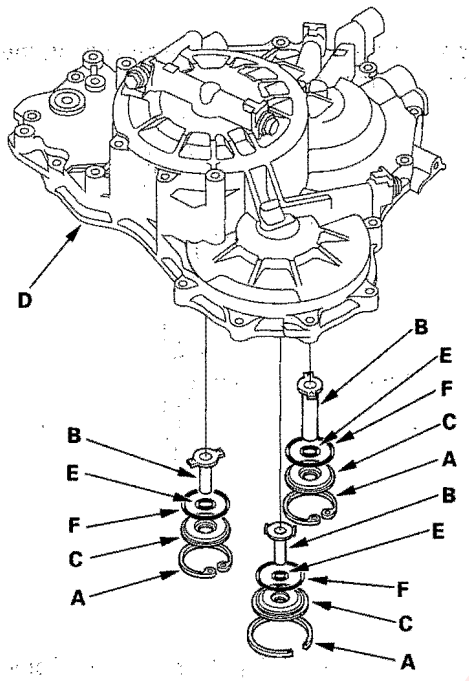

2. Install the new O-ring (E) over the ATF feed pipe.
3. Install the ATF feed pipe in the end cover by aligning the feed pipe tabs with the indentations in the end cover.
4. Install the new O-ring (F) in the end cover, then install the feed pipe flange over the ATF feed pipe and O-rings.
5. Secure the ATF feed pipe and feed pipe flange with the snap ring.

Protected by AR

Housing and Shaft Assembly Removal

Special Tools Required
Housing puller 07HAC-PK40102

1. Remove the ATF dipstick guide pipe (A).

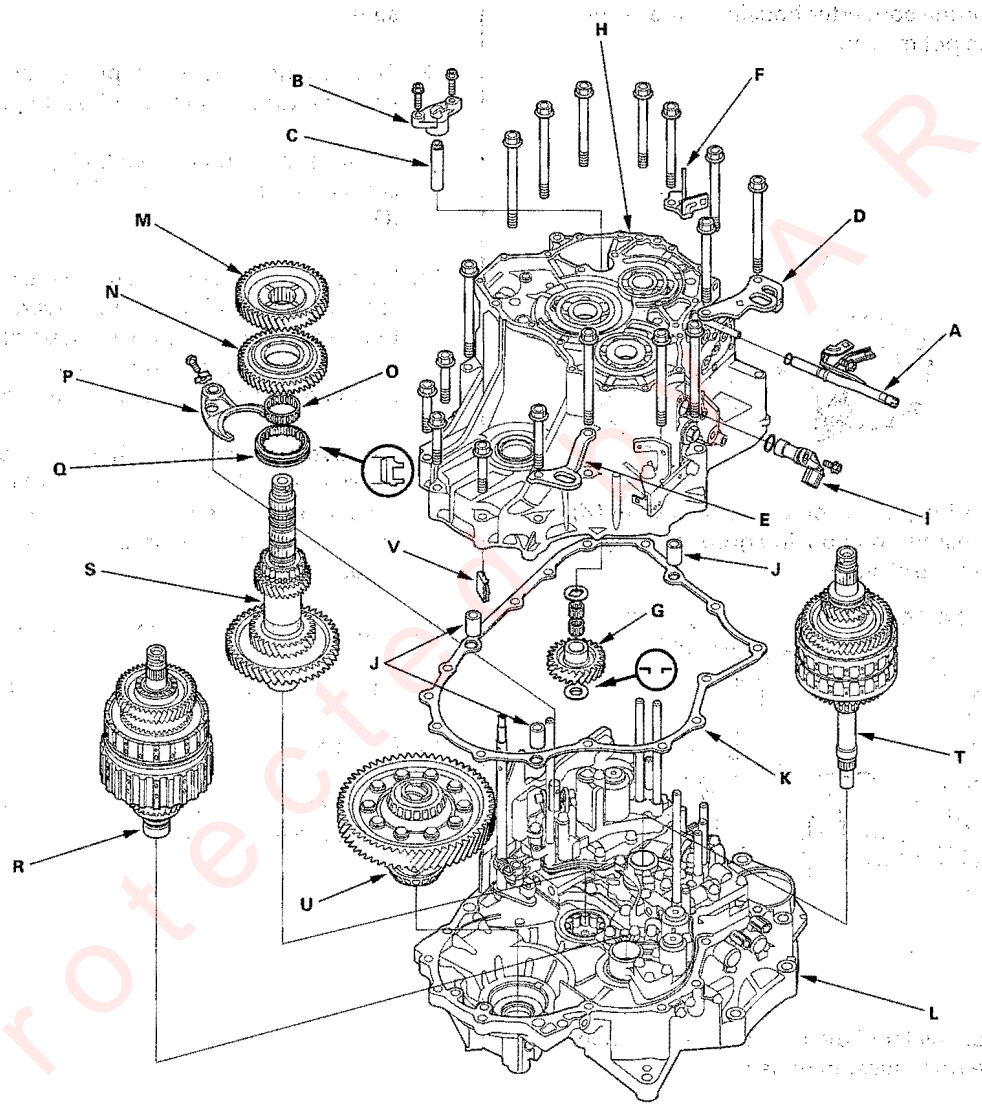

2. Remove the two bolts securing the reverse idler gear shaft holder, then remove the reverse idler gear shaft holder (B) and shaft (C).

3. Remove the transmission housing mounting bolts (17 bolts), transmission hangers (D) (E), and harness clamp bracket (F).

(cont'd)

Housing and Shaft Assembly Removal (cont'd)

4. Move the reverse idler gear (G) to disengage it from the mainshaft and countershaft idler gear.

   NOTE: The transmission housing will not separate from the torque converter housing if the reverse idler gear is not moved.

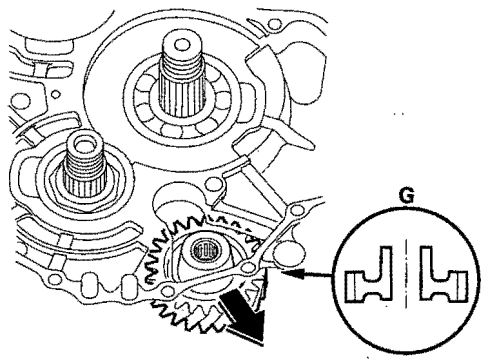

5. Align the spring pin (W) on the control shaft (X) with the transmission housing groove (Y) by turning the control shaft.

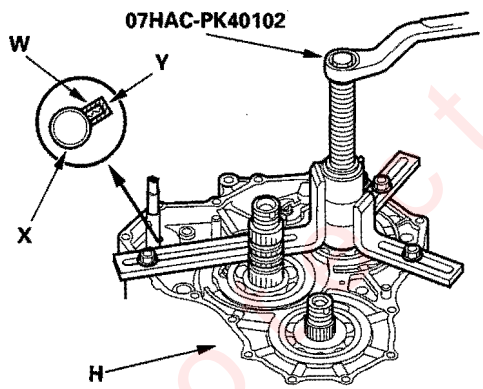

6. Install the special tool over the mainshaft, then remove the transmission housing (H).

   NOTE: If the top arm of your housing puller is too short, replace it with Housing Puller Arm, 205 mm T/N 07SAC-P0Z0101.

7. Remove the reverse idler gear (G), needle bearings, and washers from the transmission housing.

8. Remove the output shaft (countershaft) speed sensor (I).

9. Remove the three dowel pins (J) and gasket (K) from the torque converter housing (L).

10. Remove the countershaft 2nd gear (M), countershaft reverse gear (N), and needle bearing (O).

11. Remove the lock bolt securing the shift fork, then remove the shift fork (P) and reverse selector (Q). If the reverse selector hub is not press-fitted, remove the reverse selector hub, countershaft 5th gear, and needle bearing from the countershaft.

12. Remove the secondary shaft subassembly (R). If the reverse selector hub is press-fitted, remove the secondary shaft subassembly, countershaft subassembly (S) and mainshaft subassembly (T) together.

13. Remove the countershaft subassembly.

14. Remove the mainshaft subassembly.

15. Remove the differential assembly (U).

16. Remove the ATF magnet (V), and clean it. Reinstall the magnet in the transmission housing.

Protected by A R

Bearing Removal and Installation

Special Tools Required
- Driver 07749-0010000
- Seal driver attachment 07GAD-PG40101 or 07GAD-PG40100
- Attachment, 62 x 68 mm 07746-0010500
- Attachment, 72 x 75 mm 07746-0010600

NOTE: Coat all parts with ATF before assembly.

1. To remove the mainshaft bearing (A), countershaft bearing (B), and secondary shaft bearing (C) from the transmission housing, expand each snap ring with the snap ring pliers, then push the bearing out.

   NOTE: Do not remove the snap rings unless it's necessary to clean the grooves in the housing.

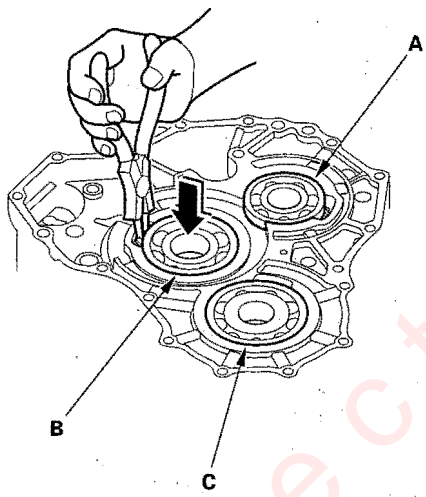

2. Install the bearings in the direction shown.

3. Expand each snap ring with the snap ring pliers, and insert the bearing part-way into the housing.

4. Release the pliers, then push the bearing down into the housing until the snap ring snaps in place around it.

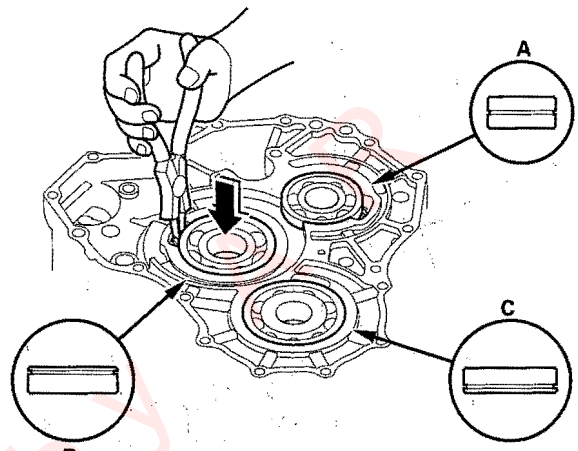

5. After installing the bearings verify the following:

   - The snap rings (A) are seated in the bearing and housing grooves.
   - The ring end gaps (B) are correct.

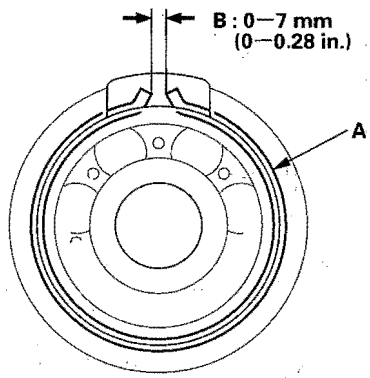

Protected by

Valve Body and ATF Strainer Removal

1. Remove the three ATF feed pipes (A) from the regulator valve body (B), four pipes (C) from the top accumulator body (D), one pipe (E) from the servo body (F), and one 10 mm pipe (G) from the accumulator body (H).

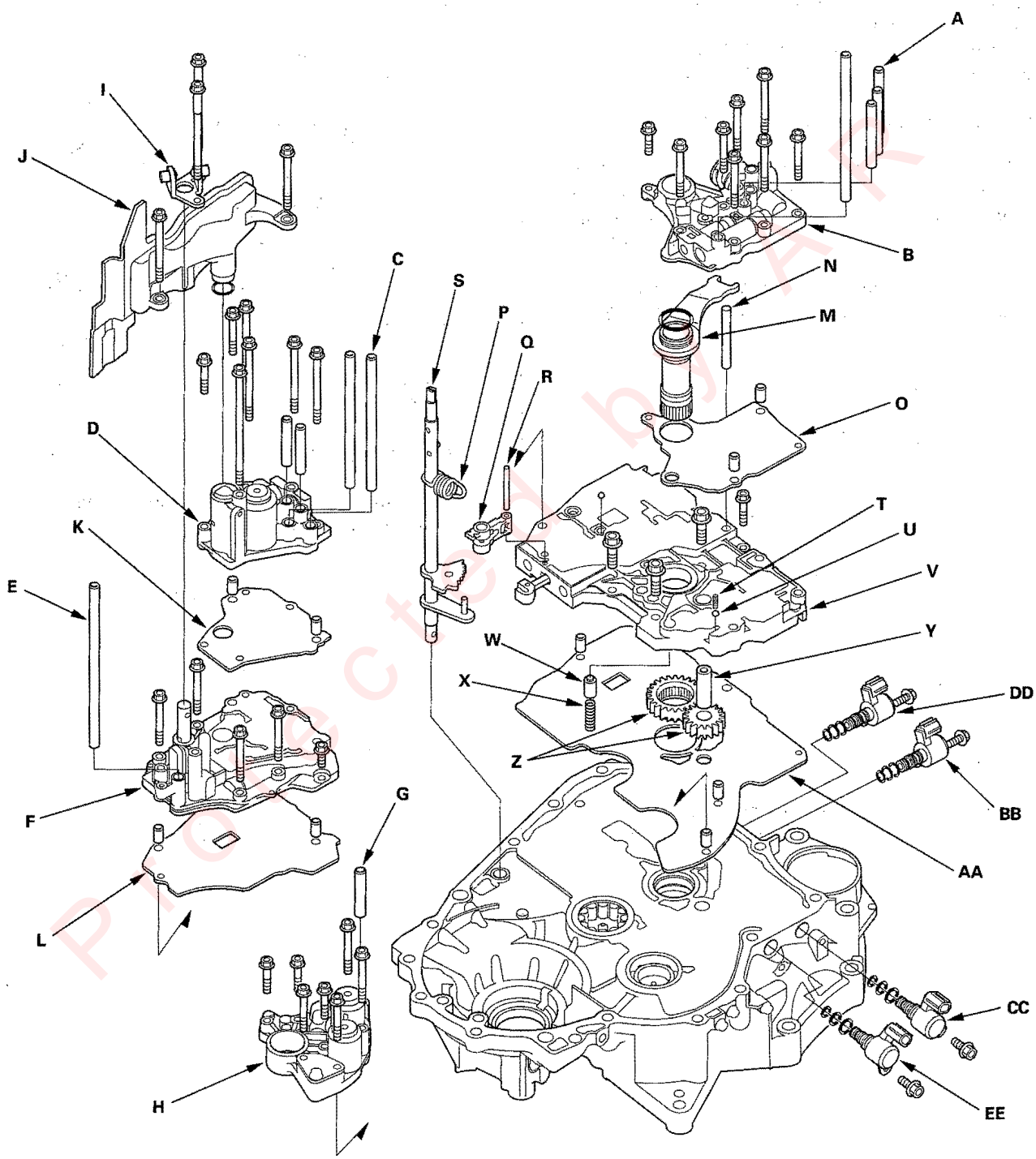

2. Remove the servo detent base (I) (two bolts).
3. Remove the ATF strainer (J) (two bolts).
4. Remove the top accumulator body (D) (seven bolts), then remove the top accumulator body separator plate (K) and two dowel pins.
5. Remove the servo body (F) (five bolts), then remove servo separator plate (L) and two dowel pins.
6. Remove the regulator valve body (B) (eight bolts).
7. Remove the stator shaft (M) and stator shaft stop (N).
8. Remove the regulator separator plate (O) and two dowel pins.
9. Remove the accumulator body (H) (seven bolts).
10. Unhook the detent spring (P) from the detent arm (Q), then remove the detent arm shaft (R), detent arm, and control shaft (S).
11. Remove the cooler check valve spring (T) and cooler check valve (U).
12. Remove the main valve body (V) (four bolts).
13. Remove the torque converter check valve (W) and valve spring (X).
14. Remove the ATF pump driven gear shaft (Y), then remove the ATF pump gears (Z).
15. Remove the main separator plate (AA) and three dowel pins.
16. Remove shift solenoid valves (BB) (CC) (DD) and torque converter clutch solenoid valve (EE) from the torque converter housing.
17. Clean the inlet opening (A) of the ATF strainer (B) thoroughly with compressed air, then check that it is in good condition and that the inlet opening is not clogged.

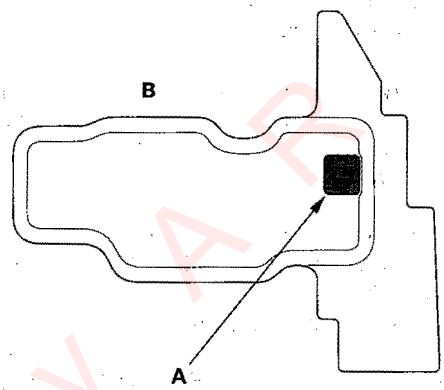

18. Test the ATF strainer by pouring clean ATF through the inlet opening, and replace it if it is clogged or damaged.

Protected by AP

Valve Body Repair

NOTE: This repair is only necessary if one or more of the valves in a valve body do not slide smoothly in their bores. Use this procedure to free the valves.

1. Soak a sheet of # 600 abrasive paper in ATF for about 30 minutes.
2. Carefully tap the valve body so the sticking valve drops out of its bore. It may be necessary to use a small screwdriver to pry the valve free. Be careful not to scratch the bore with the screwdriver.
3. Inspect the valve for any scuff marks. Use the ATF-soaked # 600 paper to polish off any burrs that are on the valve, then wash the valve in solvent and dry it with compressed air.
4. Roll up half a sheet of ATF-soaked # 600 paper and insert it in the valve bore of the sticking valve. Twist the paper slightly, so that it unrolls and fits the bore tightly, then polish the bore by twisting the paper as you push it in and out.

   NOTE: The valve body is aluminum and doesn't require much polishing to remove any burrs.

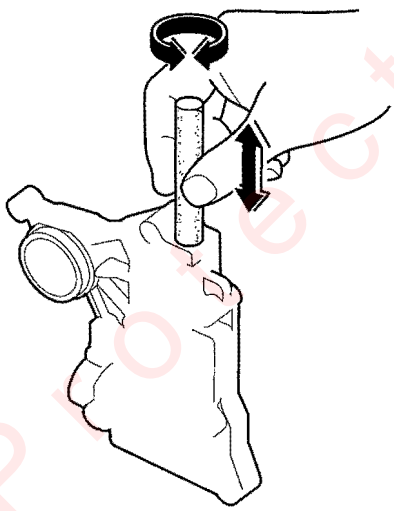

5. Remove the # 600 paper. Thoroughly wash the entire valve body in solvent, then dry it with compressed air.
6. Coat the valve with ATF, then drop it into its bore. It should drop to the bottom of the bore under its own weight. If not, repeat steps 4 and 5, then retest. If the valve still sticks, replace the valve body.

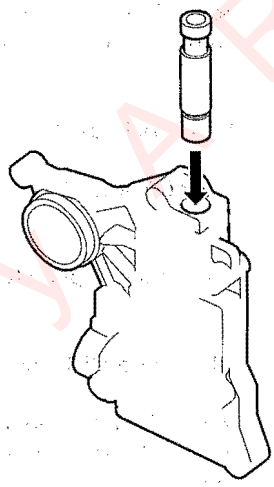

7. Remove the valve, and thoroughly clean it and the valve body with solvent. Dry all parts with compressed air, then reassemble using ATF as a lubricant.

Protected by AR

Valve Body Valve Installation

1. Coat all parts with ATF before assembly.

2. Install the valves and springs in the sequence shown for the main valve body (see page 14-264), regulator valve body (see page 14-266), servo body (see page 14-267), and top accumulator body (see page 14-268). Refer to the following valve cap illustrations, and install each valve cap so the end shown facing up will be facing the outside of the valve body.

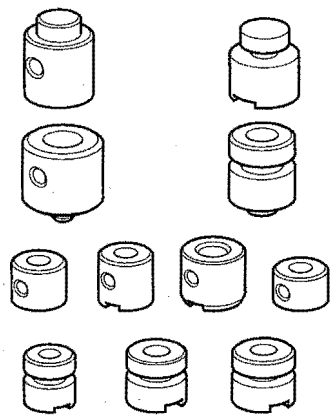

3. Install all the springs and seats. Insert the spring (A) in the valve, then install the valve in the valve body (B). Push the spring in with a screwdriver, then install the spring seat (C).

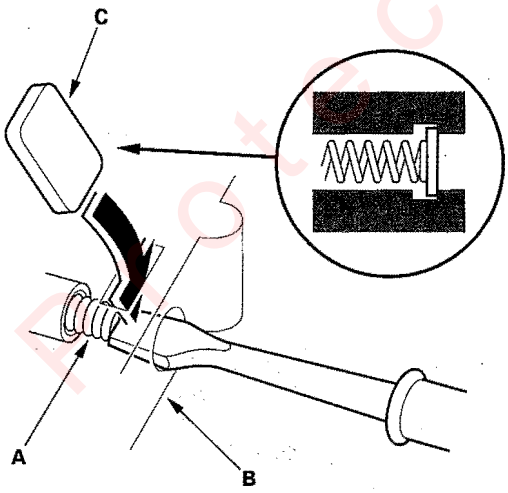

Protected by AR

Main Valve Body Disassembly, Inspection, and Reassembly

1. Clean all parts thoroughly in solvent or carburetor cleaner, and dry them with compressed air. Blow out all passages.
2. Do not use a magnet to remove the check ball, it may magnetize the ball.
3. Inspect the valve body for scoring and damage. Replace the valve body as an assembly if any parts are worn or damaged.
4. Check all valves for free movement. If any fail to slide freely, refer to valve body repair (see page 14-262).
5. Coat all parts with ATF during assembly.
6. Install the new filter in the direction shown.

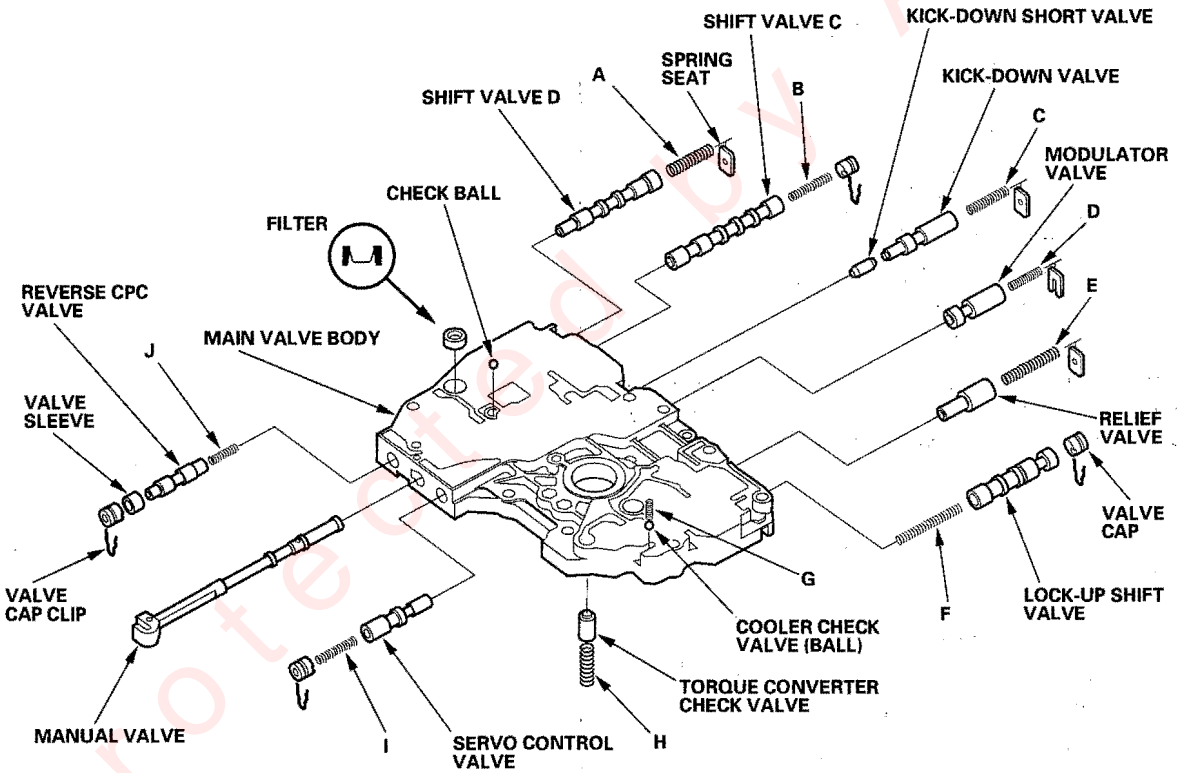

SPRING SPECIFICATIONS

Springs		Standard (New)-Unit: mm (in.)			
		Wire Dia.	O.D.	Free Length	No. of Coils
A	Shift valve D spring	0.7 (0.028)	6.6 (0.260)	33.7 (1.327)	12.6
B	Shift valve C spring	0.8 (0.031)	6.6 (0.260)	49.1 (1.933)	21.7
C	Kick-down valve spring	0.8 (0.031)	6.6 (0.260)	49.1 (1.933)	21.7
D	Modulator valve spring	1.6 (0.063)	10.4 (0.409)	33.5 (1.319)	9.8
E	Relief valve spring	1.2 (0.047)	11.1 (0.437)	39.0 (1.535)	9.9
F	Lock-up shift valve spring	0.9 (0.035)	7.6 (0.299)	63.0 (2.480)	22.4
G	Cooler check valve spring	0.6 (0.024)	5.8 (0.228)	14.5 (0.571)	6.8
H	Torque converter check valve spring	1.2 (0.047)	8.6 (0.339)	34.4 (1.354)	11.7
I	Servo control valve spring	0.9 (0.035)	6.4 (0.252)	32.5 (1.280)	17.5
J	Reverse CPC valve spring	0.7 (0.028)	6.1 (0.240)	17.8 (0.701)	7.9

Protected by A R

ATF Pump Inspection

1. Install the ATF pump drive gear (A), driven gear (B), and ATF pump driven gear shaft (C) in the main valve body (D). Lubricate all parts with ATF, and install the ATF pump driven gear with its grooved and chamfered side facing up.

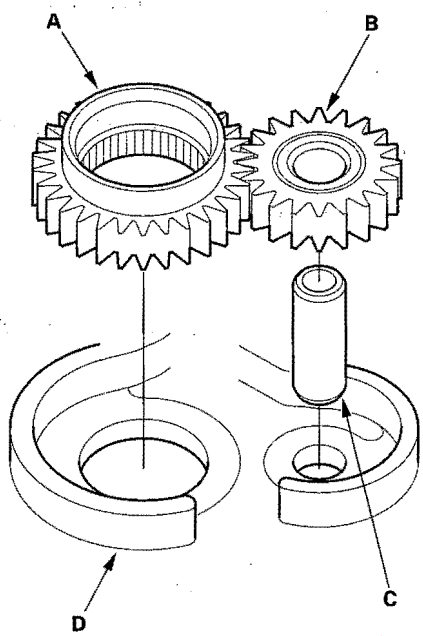

2. Measure the side clearance of the ATF pump drive gear (A) and driven gear (B).

ATF Pump Gears Side (Radial) Clearance:
Standard (New):
ATF Pump Drive Gear
0.210—0.265 mm (0.0083—0.00104 in.)
ATF Pump Driven Gear
0.070—0.125 mm (0.0028—0.0050 in.)

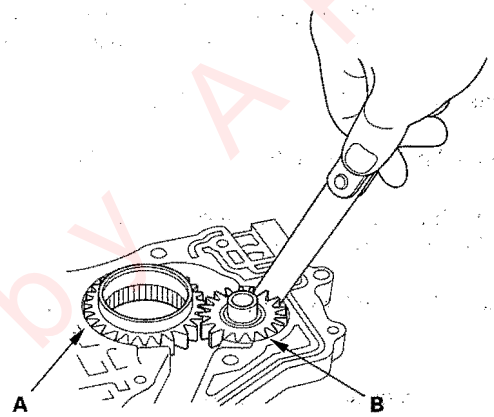

3. Remove the ATF pump driven gear shaft. Measure the thrust clearance between the ATF pump driven gear (A) and the valve body (B) with a straight edge (C) and a feeler gauge (D).

ATF Pump Drive/Driven Gear Thrust (Axial) Clearance:
Standard (New): 0.03—0.06 mm (0.001—0.002 in.)
Service Limit: 0.07 mm (0.003 in.)

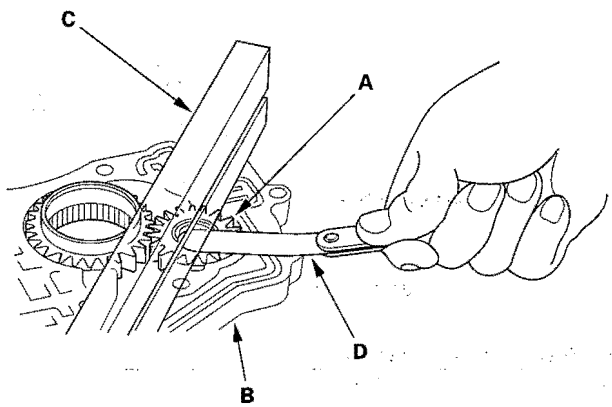

Protected by AP

Regulator Valve Body Disassembly, Inspection, and Reassembly

1. Clean all parts thoroughly in solvent or carburetor cleaner, and dry them with compressed air. Blow out all passages.
2. Inspect the valve body for scoring and damage.
3. Check all valves for free movement. If any fail to slide freely, refer to valve body repair (see page 14-262).
4. Replace the valve body as an assembly if any parts are worn or damaged.
5. Hold the regulator spring cap in place while removing the stop bolt. The regulator spring cap is spring loaded. Once the stop bolt is removed, release the spring cap slowly so it does not pop out.
6. Reassembly is the reverse of disassembly. Install the filter in the direction shown.
7. Coat all parts with ATF during assembly.
8. Align the hole in the regulator spring cap with the hole in the valve body, then press the spring cap into the valve body, and tighten the stop bolt.
9. Install the new filter in the direction shown.

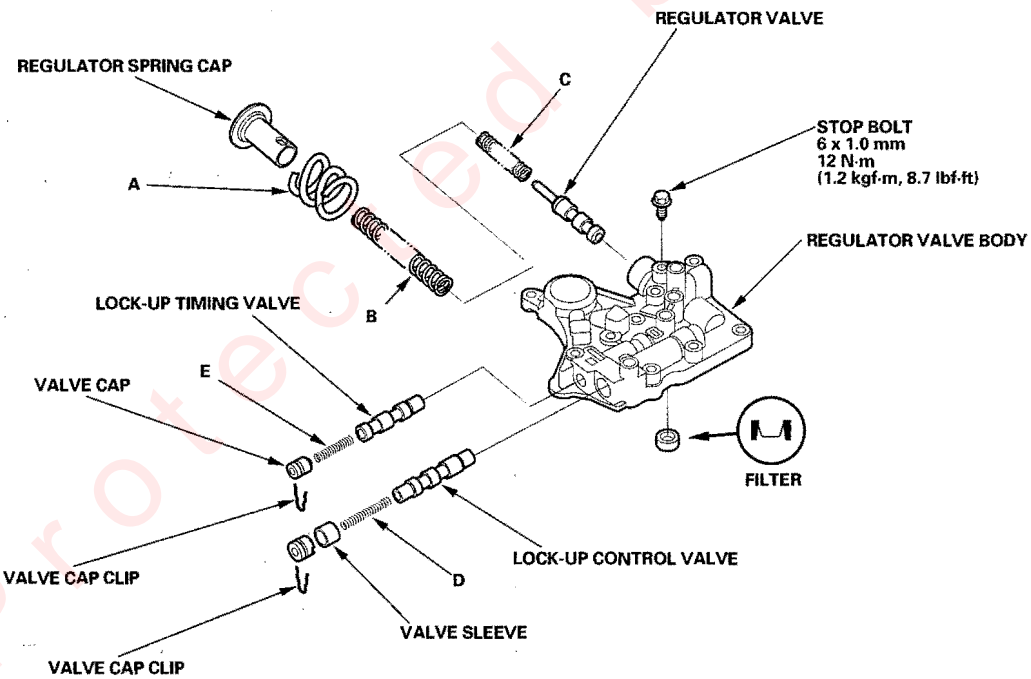

SPRING SPECIFICATIONS

Springs		Standard (New)-Unit: mm (in.)			
		Wire Dia.	O.D.	Free Length	No. of Coils
A	Stator reaction spring	4.5 (0.177)	35.4 (1.394)	30.3 (1.193)	1.92
B	Regulator valve spring A	1.9 (0.075)	14.7 (0.579)	80.6 (3.173)	16.1
C	Regulator valve spring B	1.6 (0.063)	9.2 (0.362)	44.0 (1.732)	12.5
D	Lock-up control valve spring	0.7 (0.028)	6.6 (0.260)	42.9 (1.689)	15.3
E	Lock-up timing valve spring	0.65 (0.026)	6.6 (0.260)	34.8 (1.370)	14.1

Protected by A R

Servo Body Disassembly, Inspection, and Reassembly

1. Clean all parts thoroughly in solvent or carburetor cleaner, and dry them with compressed air. Blow out all passages.
2. Inspect the servo body for scoring and damage. Replace the valve body as an assembly if any parts are worn or damaged.
3. Check all valves for free movement. If any fail to slide freely, refer to valve body repair (see page 14-262).
4. Coat all parts with ATF during reassembly.

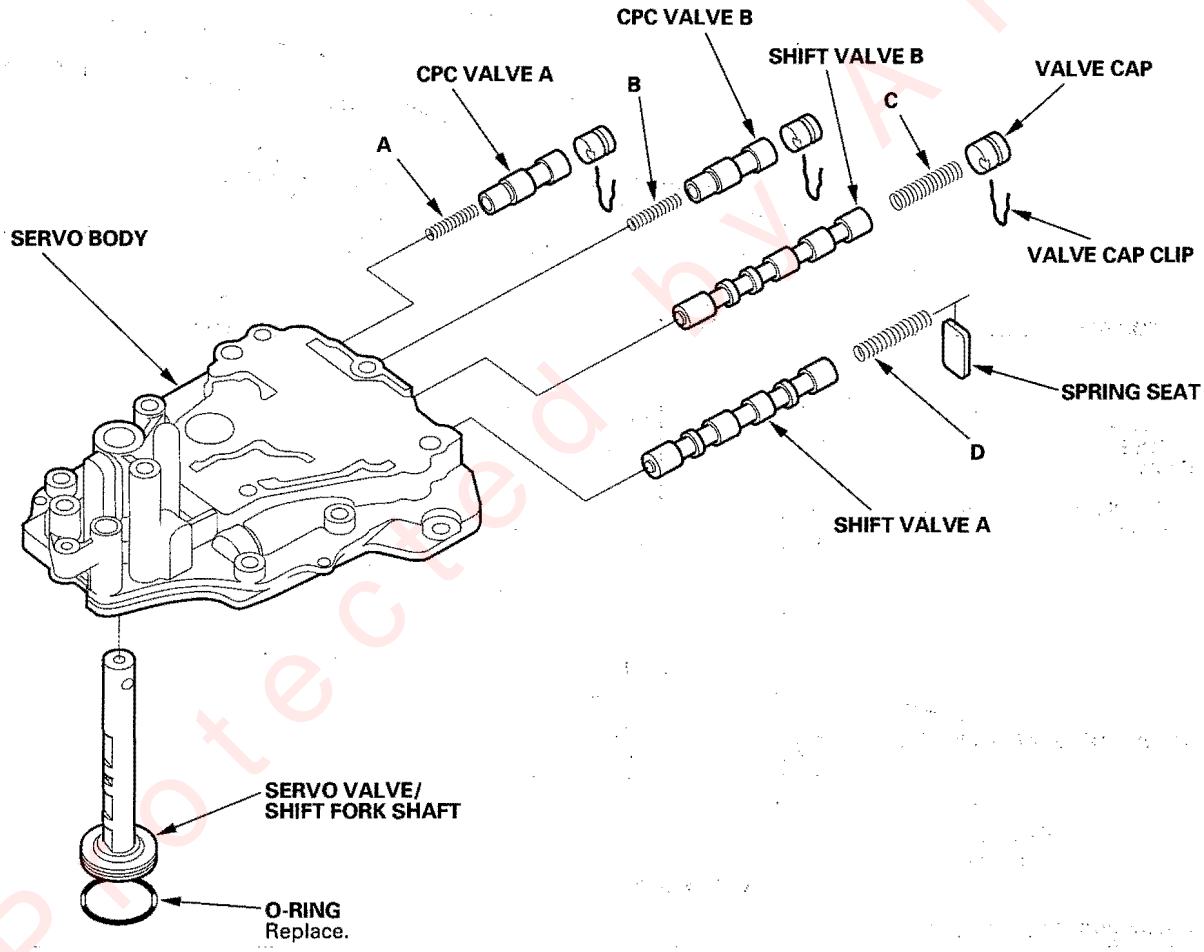

SPRING SPECIFICATIONS

Springs		Standard (New)-Unit: mm (in.)			
		Wire Dia.	O.D.	Free Length	No. of Coils
A	CPC valve A spring	0.7 (0.028)	6.1 (0.240)	17.8 (0.701)	7.9
B	CPC valve B spring	0.7 (0.028)	6.1 (0.240)	17.8 (0.701)	7.9
C	Shift valve B spring	0.8 (0.031)	6.6 (0.260)	49.1 (1.933)	21.7
D	Shift valve A spring	0.8 (0.031)	6.6 (0.260)	49.1 (1.933)	21.7

Protected by AR

Top Accumulator Body Disassembly, Inspection, and Reassembly

1. Clean all parts thoroughly in solvent or carburetor cleaner, and dry them with compressed air. Blow out all passages.
2. Inspect the top accumulator body for scoring and damage. Replace the valve body as an assembly if any parts are worn or damaged.
3. Check all valves for free movement. If any fail to slide freely, refer to valve body repair (see page 14-262).
4. Coat all parts with ATF during assembly.

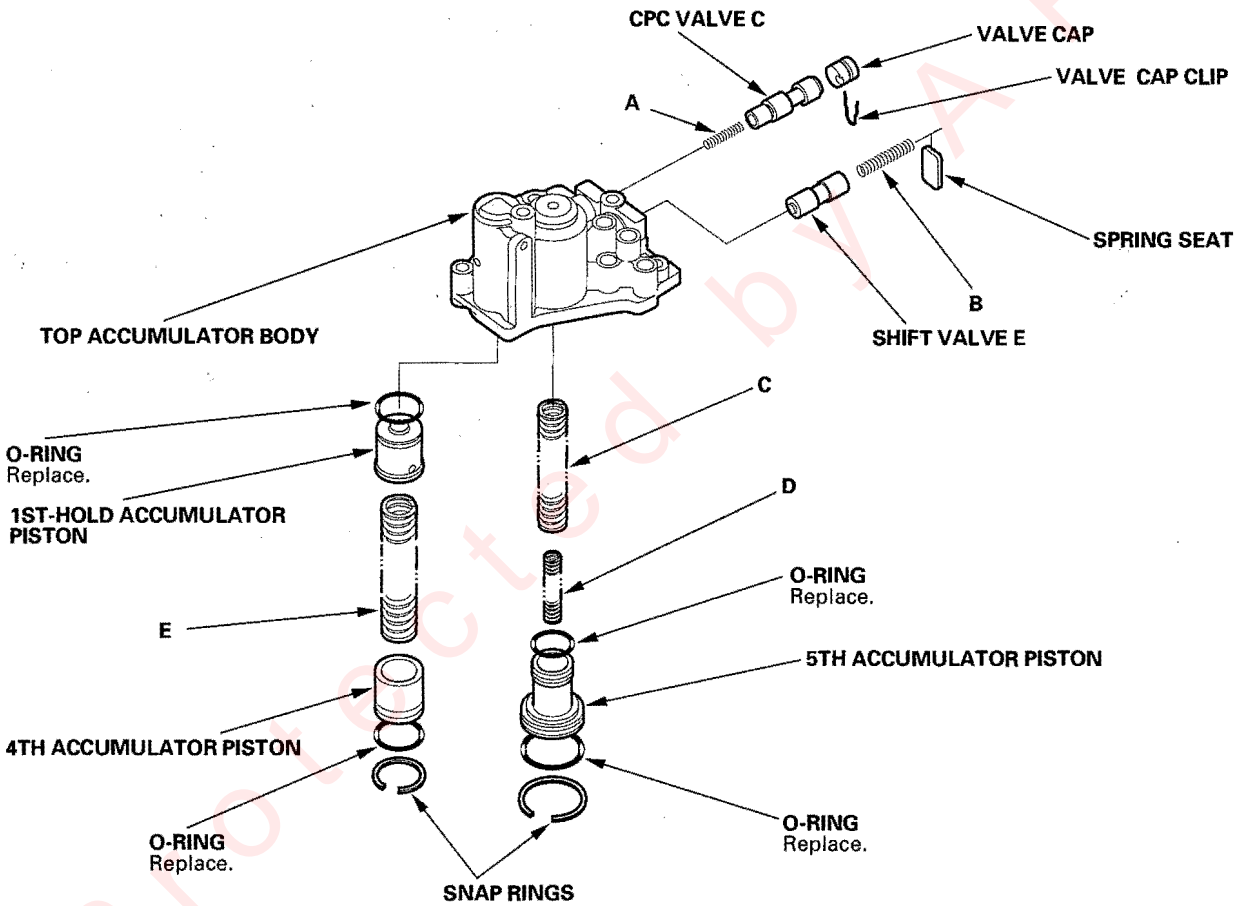

SPRING SPECIFICATIONS

Springs		Standard (New)-Unit: mm (in.)			
		Wire Dia.	O.D.	Free Length	No. of Coils
A	CPC valve C spring	0.7 (0.028)	6.1 (0.240)	17.8 (0.701)	7.9
B	Shift valve E spring	0.8 (0.031)	7.1 (0.280)	49.0 (1.929)	17.2
C	5th accumulator spring A	2.2 (0.087)	16.4 (0.646)	75.7 (2.980)	14.2
D	5th accumulator spring B	2.0 (0.079)	10.0 (0.394)	45.5 (1.791)	11.6
E	4th/1st-hold accumulator spring	3.4 (0.134)	19.6 (0.772)	57.4 (2.260)	8.4

Protected by AR

Accumulator Body Disassembly, Inspection, and Reassembly

1. Do not use a magnet to remove the check balls; it may magnetize the balls.
2. Inspect the accumulator body for scoring and damage.
3. Clean all parts thoroughly in solvent or carburetor cleaner, and dry them with compressed air. Blow out all passages.
4. Coat all parts with ATF during assembly.

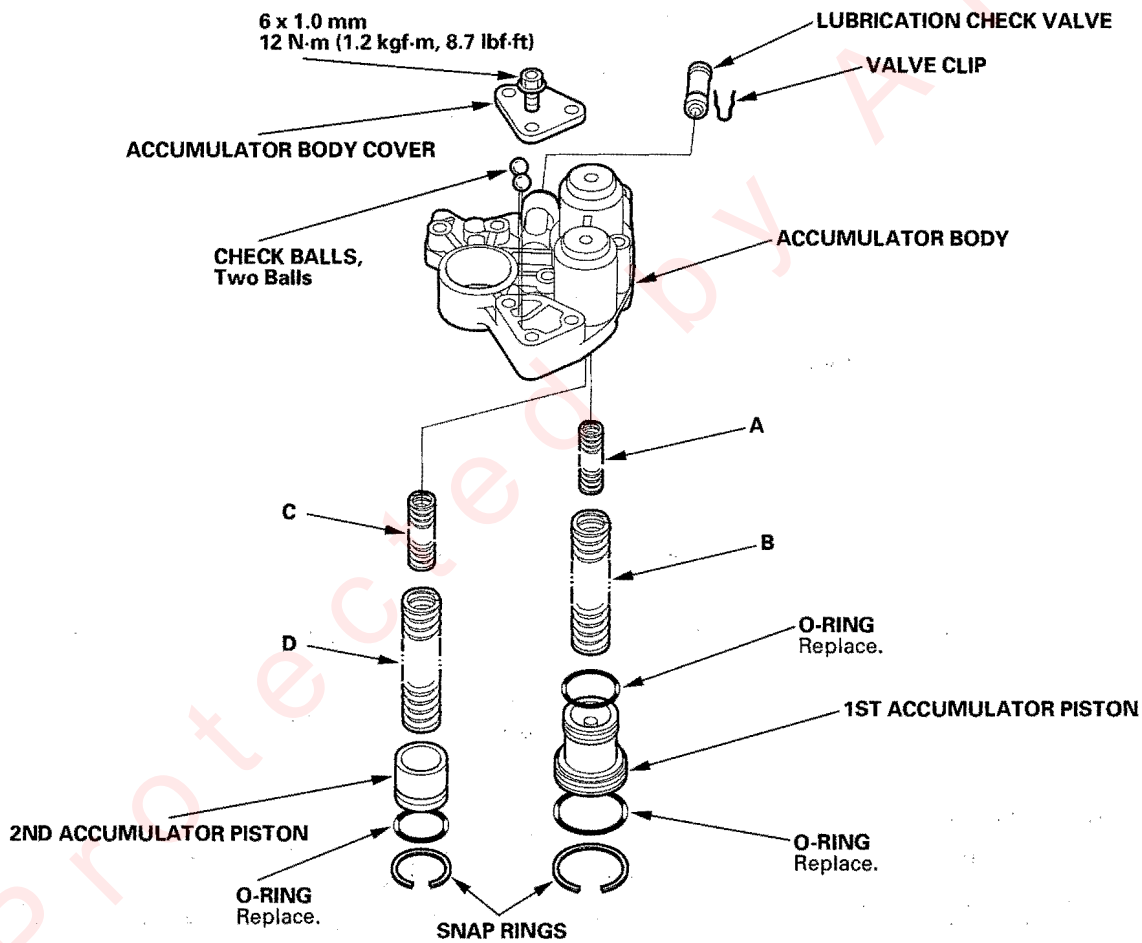

SPRING SPECIFICATIONS

Springs		Standard (New)-Unit: mm (in.)			
		Wire Dia.	O.D.	Free Length	No. of Coils
A	1st accumulator spring B	2.3 (0.091)	12.6 (0.496)	42.0 (1.654)	9.9
B	1st accumulator spring A	2.4 (0.094)	19.5 (0.768)	67.7 (2.665)	10.2
C	2nd accumulator spring B	2.6 (0.102)	13.0 (0.512)	44.0 (1.732)	9.0
D	2nd accumulator spring A	2.5 (0.098)	19.6 (0.772)	57.7 (2.272)	9.5

Protected by AR

3rd Accumulator and End Cover Disassembly, Inspection, and Reassembly

1. Clean all parts thoroughly in solvent or carburetor cleaner, and dry them with compressed air. Blow out all passages.
2. Coat all parts with ATF during assembly.

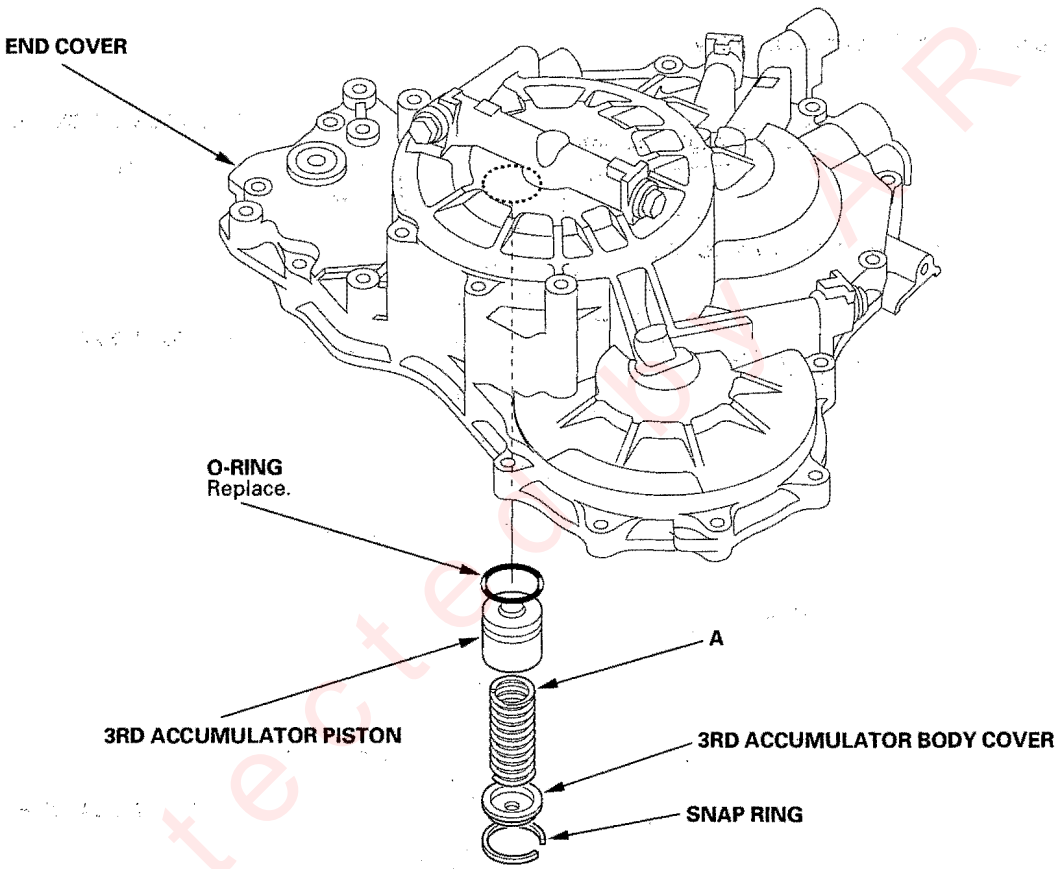

SPRING SPECIFICATIONS

Springs		Standard (New)-Unit: mm (in.)			
		Wire Dia.	O.D.	Free Length	No. of Coils
A	3rd accumulator spring	3.1 (0.122)	19.6 (0.772)	39.4 (1.551)	5.5

Protected by AR

Mainshaft Bearing and Oil Seal Replacement

Special Tools Required
- Adjustable bearing puller, 25—40 mm 07736-A01000B or 07736-A01000A
- Driver 07749-0010000
- Attachment, 62 x 68 mm 07746-0010500
- Attachment, 72 x 75 mm 07746-0010600

1. Remove the mainshaft bearing and oil seal with the special tool and a commercially available 3/8"-16 slide hammer (A).

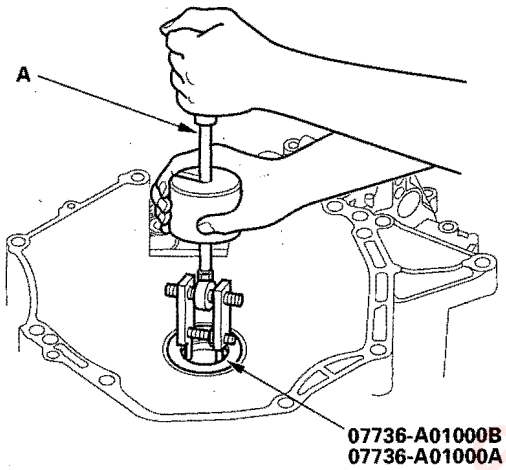

2. Install the new mainshaft bearing until it bottoms in the housing with the special tools.

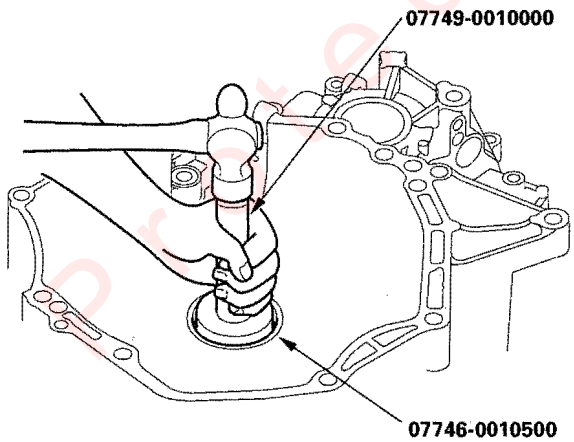

3. Install the new oil seal flush to the housing with the special tools.

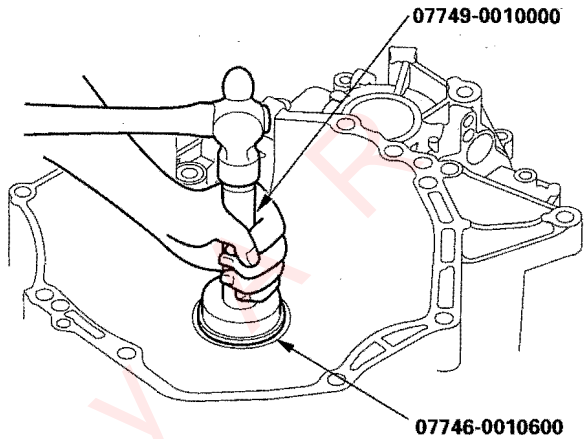

Protected by

Countershaft Bearing Replacement

Special Tools Required
- Adjustable bearing puller, 25—40 mm 07736-A01000B or 07736-A01000A
- Driver 07749-0010000
- Attachment, 62 x 68 mm 07746-0010500

1. Remove the countershaft bearing (A) with the special tool and a commercially available 3/8″-16 slide hammer (B).

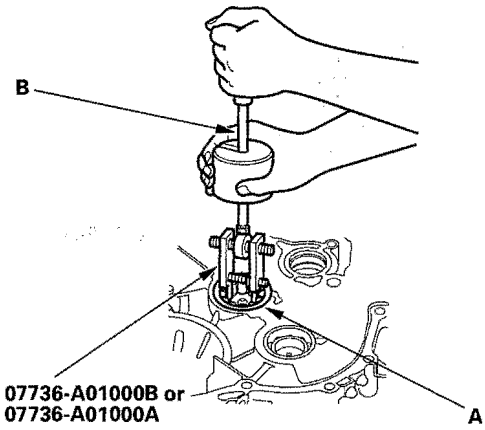

2. Install the ATF guide plate (A).

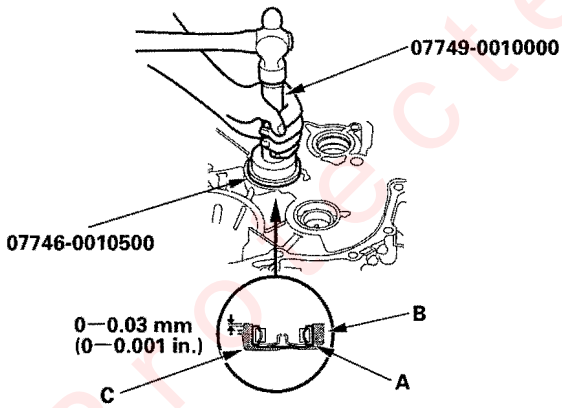

3. Install the new bearing (B) into the housing (C) with the special tools.

Secondary Shaft Bearing Replacement

Special Tools Required
- Adjustable bearing puller, 25—40 mm 07736-A01000B or 07736-A01000A
- Driver 07749-0010000
- Driver attachment 07947-6340500

1. Remove the secondary shaft bearing (A) with the special tool and a commercially available 3/8″-16 slide hammer (B).

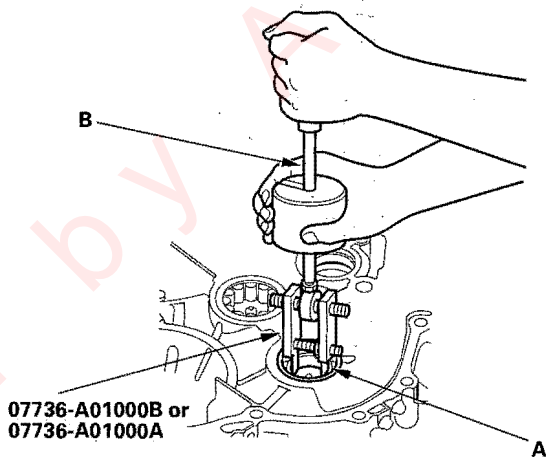

2. Install the ATF guide plate (A).

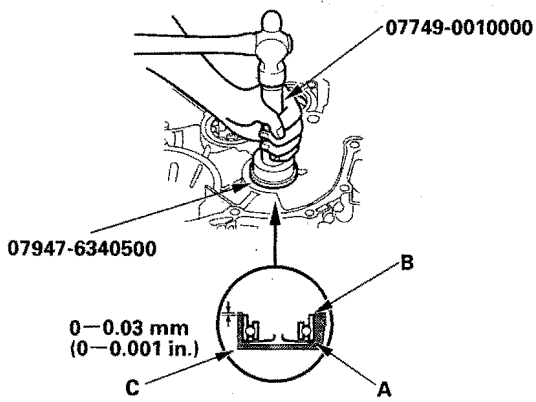

3. Install the new bearing (B) into the housing (C) with the special tools.

Protected by AP

Control Shaft Oil Seal Replacement

Special Tools Required
- Driver 07749-0010000
- Attachment, 22 x 24 mm 07746-0010800

1. Remove the oil seal (A), from the torque converter housing (B).

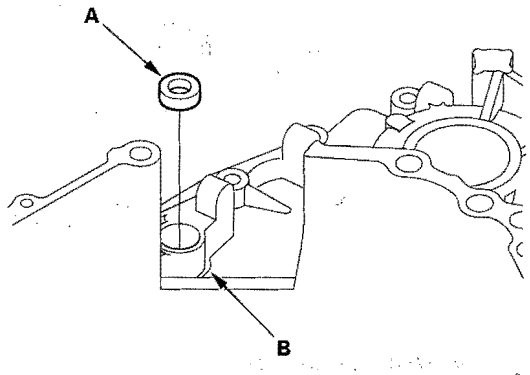

2. Install the new oil seal flush to the torque converter housing with the special tools.

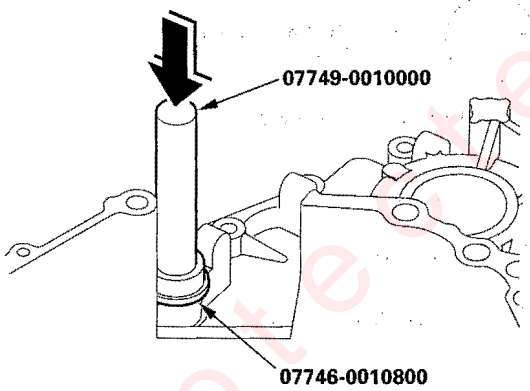

Protected by AR

Mainshaft Disassembly, Inspection, and Reassembly

1. Lubricate all parts with ATF during assembly.

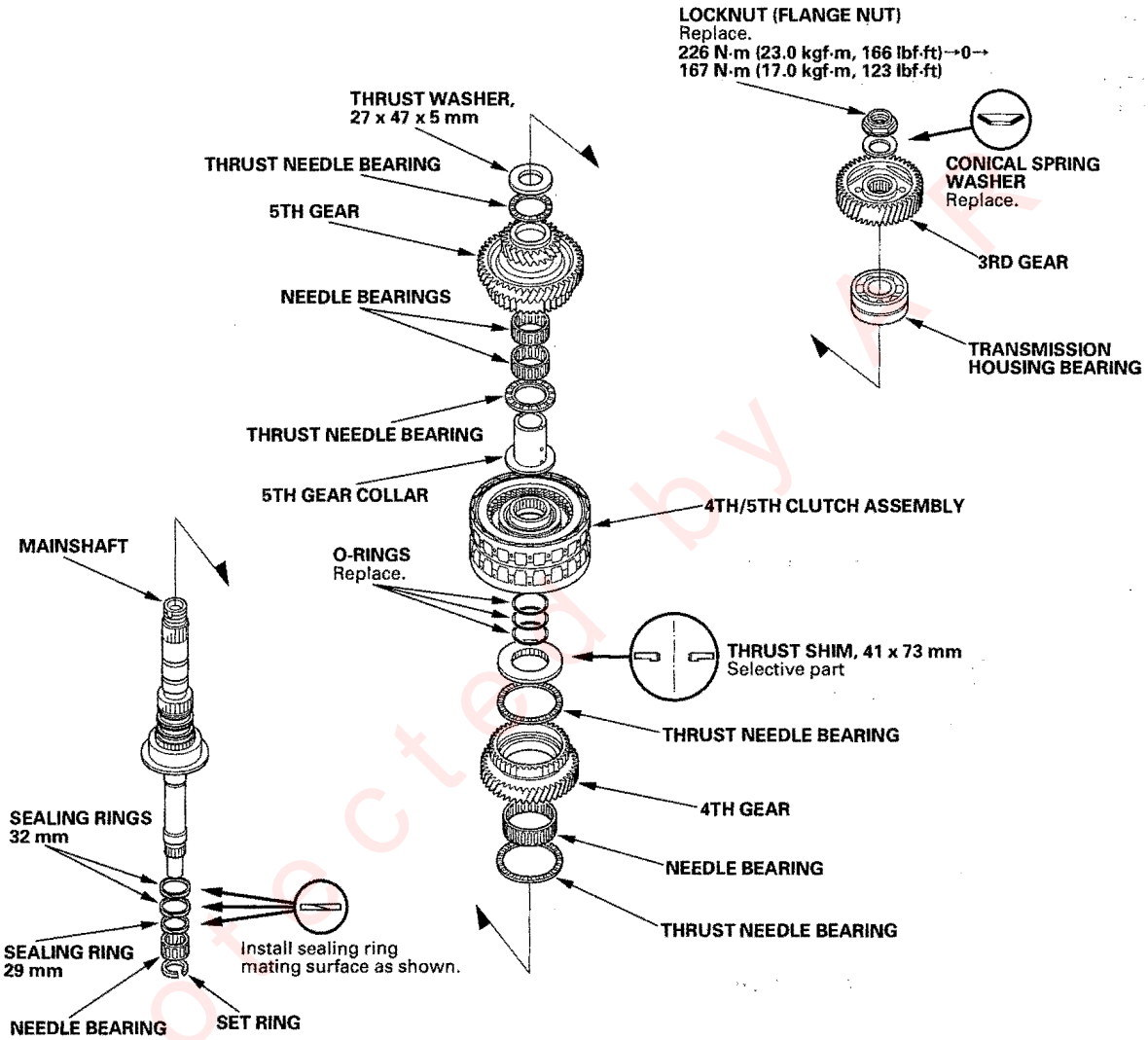

2. Check the clearance of the 4th/5th clutch assembly (see page 14-275).
3. Inspect the thrust needle bearing and the needle bearing for scoring and rough movement.
4. Inspect the splines for excessive wear and damage.
5. Check shaft bearing surfaces for scoring and excessive wear.
6. Before installing the O-rings, wrap the shaft splines with tape to prevent O-ring damage.
7. Install the 41 x 73 mm thrust shim and conical spring washer in the direction shown.
8. Inspect the condition of the sealing rings. If the sealing rings are worn, distorted, or damaged, replace them (see page 14-276).

Protected by AR

4th/5th Clutch Clearance Inspection

1. Remove the O-rings from the mainshaft.
2. Assemble the 41 x 73 mm thrust shim (A), 4th/5th clutch assembly (B), and 5th gear collar (C) on the mainshaft (D).

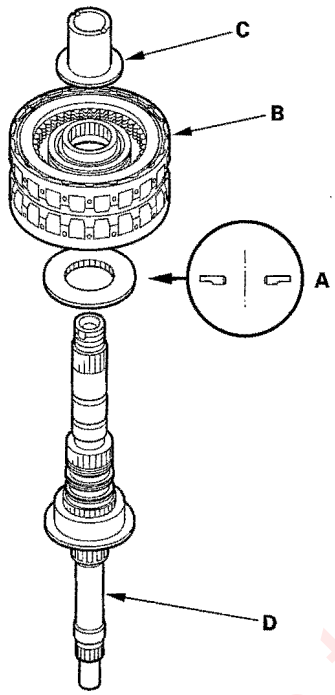

3. Hold the 5th gear collar (C) against the clutch assembly (B), then measure the clearance between the clutch guide (E) and the 5th gear collar with a feeler gauge (F) in at least three places. Use the average as the actual clearance.

Standard: 0.03 – 0.11 mm (0.001 – 0.004 in.)

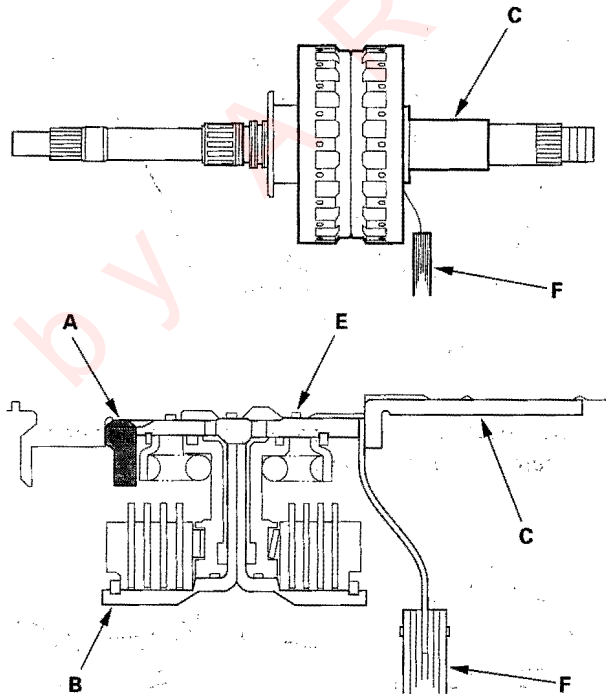

4. If the clearance is out of standard, remove the thrust shim and measure its thickness.
5. Select and install a new shim, then recheck.

THRUST SHIM, 41 x 73 mm

No.	Part Number	Thickness
1	90414-P7W-000	7.85 mm (0.309 in.)
2	90415-P7W-000	7.90 mm (0.311 in.)
3	90416-P7W-000	7.95 mm (0.313 in.)
4	90417-P7W-000	8.00 mm (0.315 in.)
5	90418-P7W-000	8.05 mm (0.317 in.)
6	90419-P7W-000	8.10 mm (0.319 in.)

6. After replacing the thrust shim, make sure the clearance is within standard.

Protected by MR

Mainshaft Sealing Ring Replacement

The sealing rings are synthetic resin with chamfered ends. Check the condition of the sealing rings, and replace them only if they are worn, distorted, or damaged.

1. For a better fit, squeeze sealing rings together slightly before installing them.

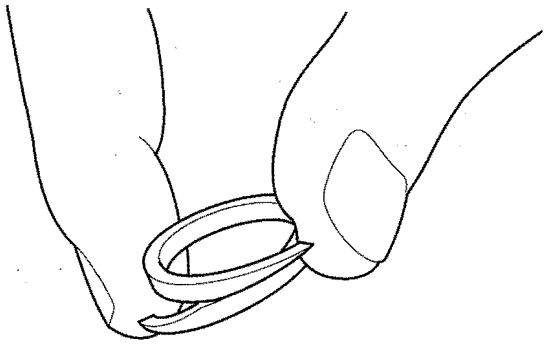

2. Apply ATF to the new sealing rings then install them on the mainshaft.

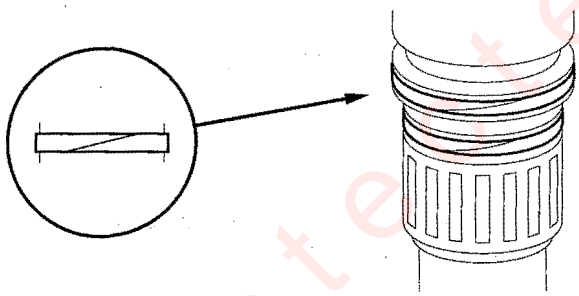

3. After installing the sealing rings, verify the following:

   - The rings are fully seated in the groove.
   - The rings are not twisted.
   - The chamfered ends of the rings are properly joined.

Protected by AR

Countershaft Disassembly, Inspection, and Reassembly

1. Remove the locknut, and take off components down to the reverse selector hub.

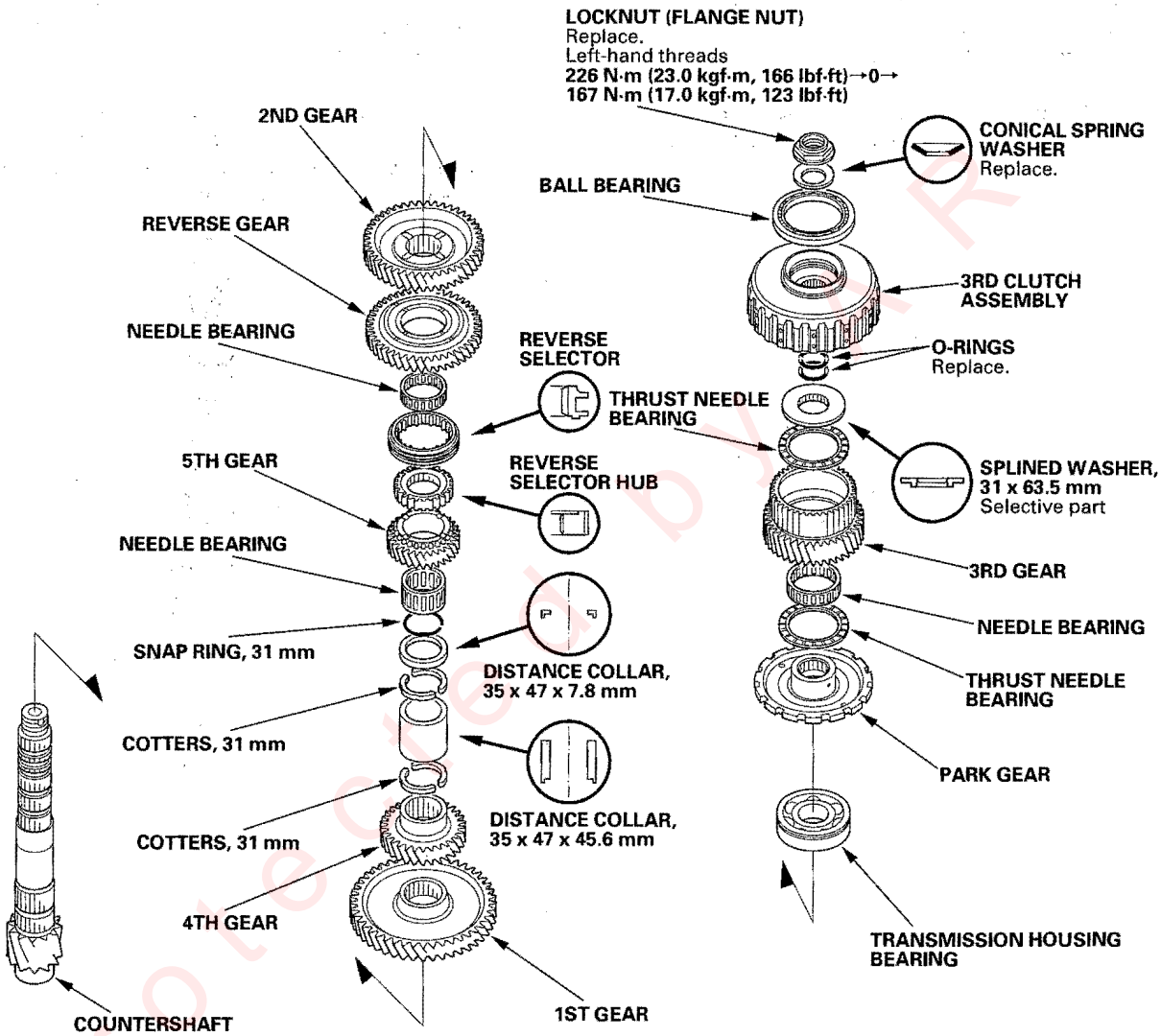

2. Remove the reverse selector hub, 4th gear, and 1st gear (see page 14-278).
3. Check the bearing on the 3rd clutch for wear and rough movement. If the bearing is worn or damaged, replace it (see page 14-280).
4. Inspect the thrust needle bearing and the needle bearing for scoring and rough movement.
5. Check the splines for excessive wear and damage.
6. Check the shaft bearing surfaces for scoring and excessive wear.
7. Lubricate all parts with ATF, and reassemble the shaft and gears.
8. Install the distance collars, reverse selector hub, reverse selector, splined washer, and conical spring washer in the direction shown.

Protected by R

Countershaft Reverse Selector Hub and 4th Gear Removal

1. Remove the reverse selector hub (A) and the 5th gear (B) from the countershaft with a press. Place a shaft protector (C) between the countershaft and press to prevent damaging the countershaft.

   NOTE: Some reverse selector hubs are not press-fitted, and can be removed without using a press.

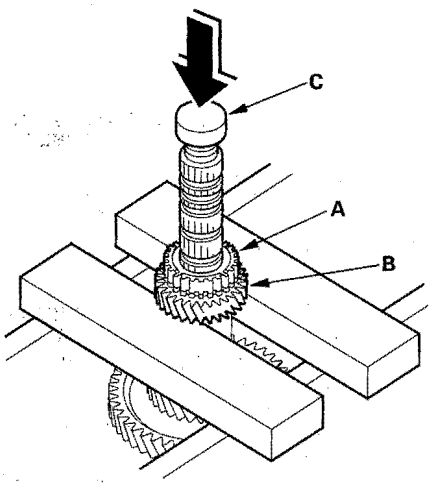

2. Remove the needle bearing, snap ring, 35 x 47 x 7.8 mm distance collar, 31 mm cotters, 35 x 47 x 45.6 mm distance collar, and 31 mm cotters from the countershaft.

3. Remove the 1st gear (A) and 4th gear (B) from the countershaft with a press. Place a shaft protector (C) between the countershaft and press to prevent damaging the countershaft.

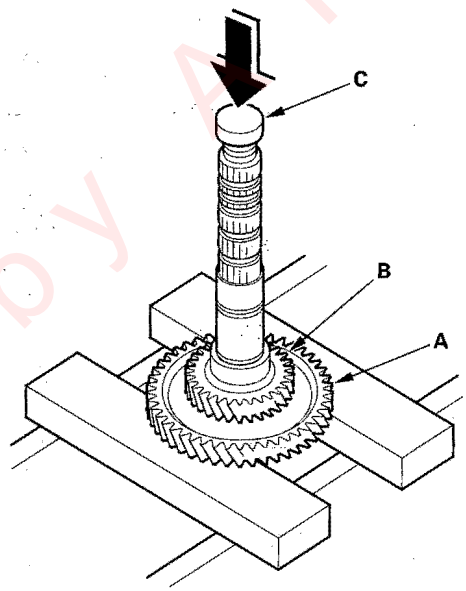

Protected by AR

Countershaft 4th Gear and Reverse Selector Hub Installation

Special Tools Required
Driver, 40 mm I.D. 07746-0030100

1. Apply ATF to the parts.
2. Install the 1st gear on the countershaft by hand.
3. Align the shaft splines with those on 4th gear, then press the countershaft (A) into the 4th gear with a press. Place a shaft protector (B) between the countershaft and press to prevent damaging the countershaft.

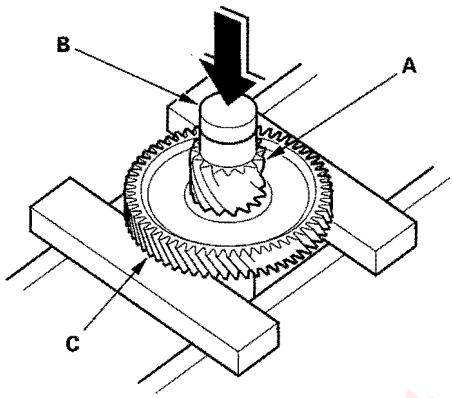

4. Stop pressing the countershaft when the 4th gear contacts the 1st gear (C).
5. Install the 31 mm cotters, 35 x 47 x 45.6 mm distance collar, 31 mm cotters, 35 x 47 x 7.8 mm distance collar, snap ring, needle bearing, and 5th gear (A) on the countershaft.

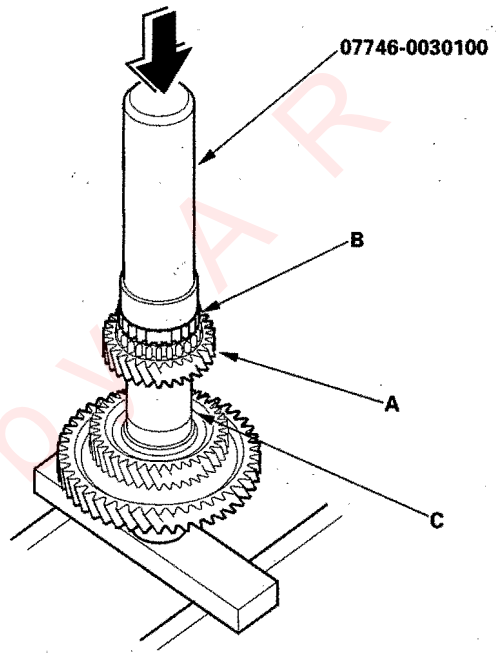

6. Slide the reverse selector hub (B) over the countershaft (C), then press it into place with the special tool and a press.

   NOTE: Some reverse selector hubs are not press fitted, and can be installed without using the special tool and a press.

Protected by AR

3rd Clutch Ball Bearing Replacement

Special Tools Required
- Driver 07749-0010000
- Attachment, 62 x 68 mm 07746-0010500

NOTE: Check the bearing for wear and rough movement. If the bearing is OK, removal is not necessary.

1. Remove the ball bearing (A) from the 3rd clutch with a commercially available bearing puller (B), bearing separator (C), and stepper adapter (D).

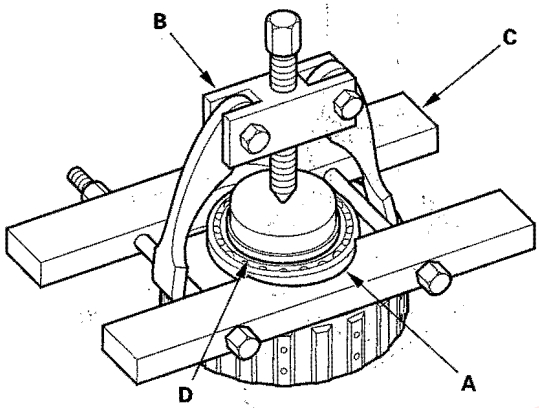

2. Install the new bearing on the 3rd clutch with the special tools and a press.

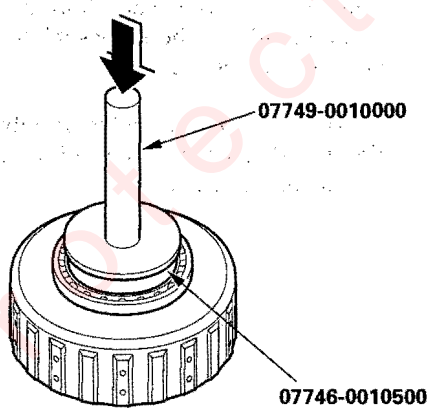

Protected by AR

Secondary Shaft Disassembly, Inspection, and Reassembly

1. Remove the locknut, and disassemble the shaft and gears.

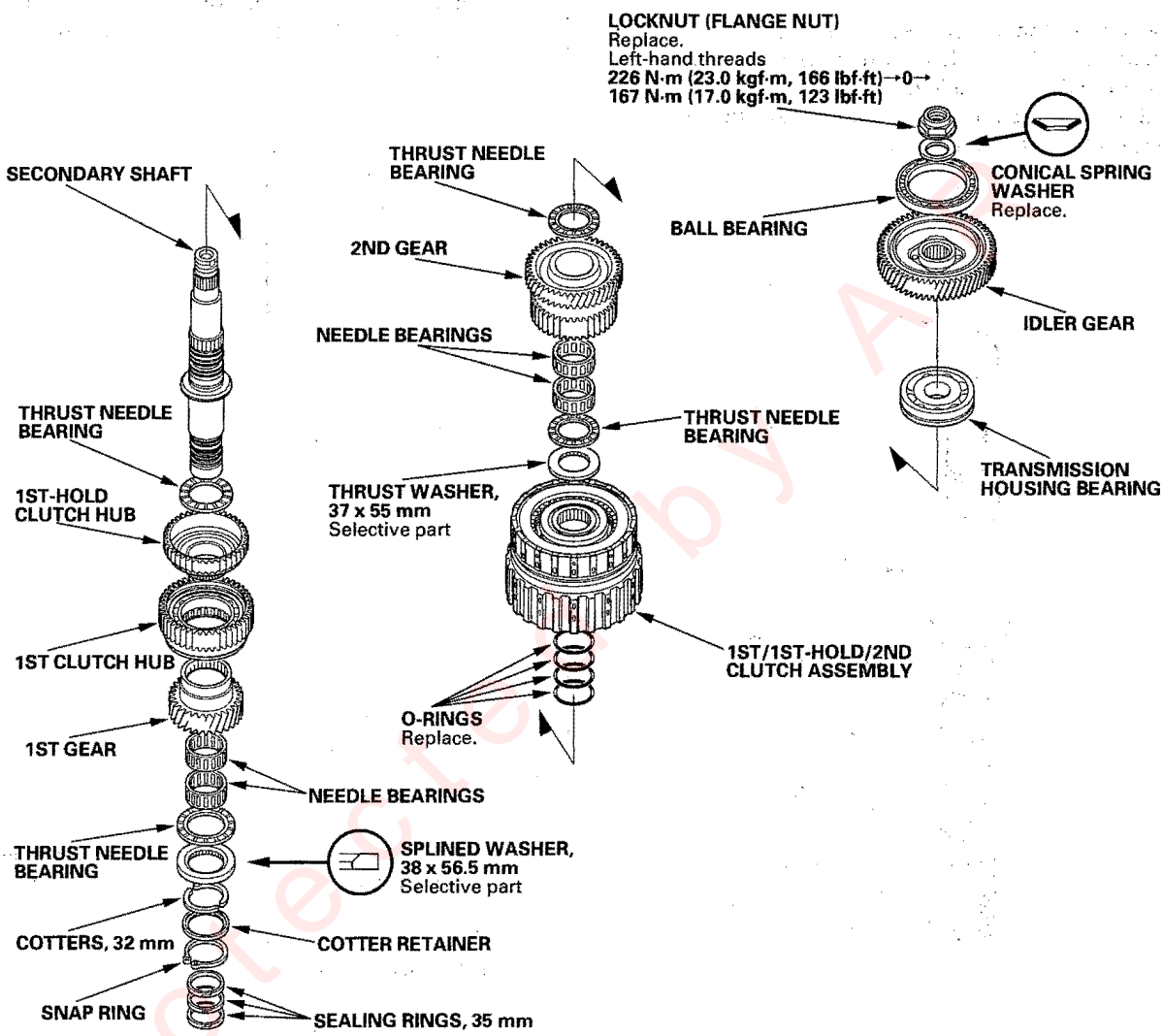

2. Inspect the thrust needle bearing and needle bearing for scoring and rough movement.
3. Check the clearance of the secondary shaft assembly.
4. Check the splines for excessive wear and damage.
5. Check the shaft bearing surfaces for scoring and excessive wear.
6. Check the idler gear bearing for wear and rough movement. If the bearing is worn or damaged, replace it (see page 14-284).
7. Before installing the O-rings, wrap the shaft splines with tape to prevent damage to the O-rings.
8. Lubricate all parts with ATF during reassembly.
9. Install the conical spring washer and splined washer in the direction shown.

Protected by A

Secondary Shaft Clearance Inspection

1. Remove the O-rings from the secondary shaft.

2. Assemble the thrust needle bearing (A), 1st gear assembly (B), needle bearings (C), thrust needle bearing (D), 38 x 56.5 mm splined washer (E), 32 mm cotters (F), cotter retainer (G), and snap ring (H) on the secondary shaft (I).

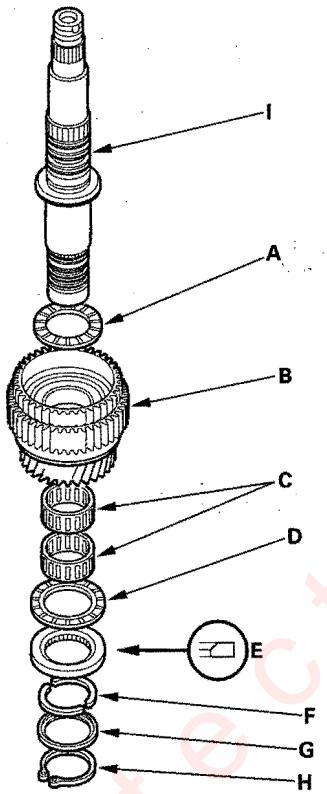

3. Measure the clearance between the 38 x 56.5 mm splined washer (E) and cotters (F) with a feeler gauge (J) in at least three places. Use the average as the actual clearance.

Standard: 0.07—0.15 mm (0.003—0.006 in.)

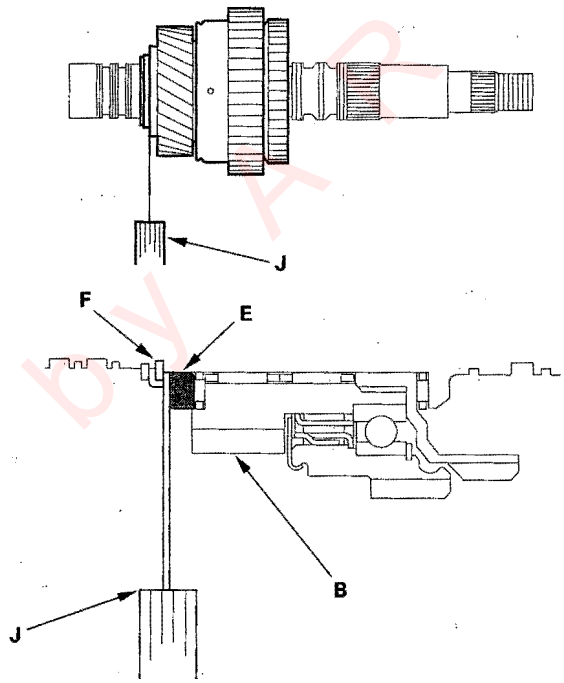

4. If the measurement is out of standard, remove the splined washer, and measure its thickness.

5. Select and install a new splined washer, then recheck the clearance.

SPLINED WASHER, 38 x 56.5 mm

No.	Part Number	Thickness
1	90502-P0Z-000	6.85 mm (0.270 in.)
2	90503-P0Z-000	6.90 mm (0.272 in.)
3	90504-P0Z-000	6.95 mm (0.274 in.)
4	90505-P0Z-000	7.00 mm (0.276 in.)
5	90506-P0Z-000	7.05 mm (0.278 in.)
6	90507-P0Z-000	7.10 mm (0.280 in.)

Protected by AR

6. Remove the 27 x 47 x 5 mm thrust washer from the mainshaft.

7. Assemble the 1st/1st-hold/2nd clutch assembly (A), 37 x 55 mm thrust washer (B), thrust needle bearing (C), needle bearings (D), 2nd gear (E), thrust needle bearing (F), and 27 x 47 x 5 mm thrust washer (removed from mainshaft) (G) on the secondary shaft sub-assembly (H).

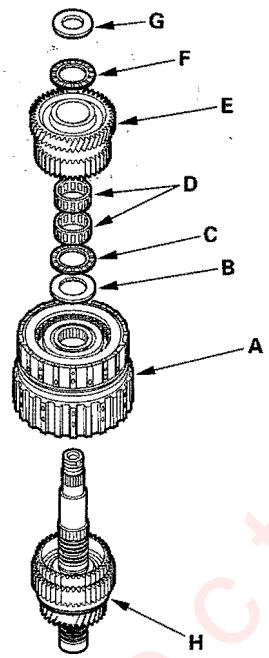

8. Set the dial indicator (I) on the 2nd gear (E).

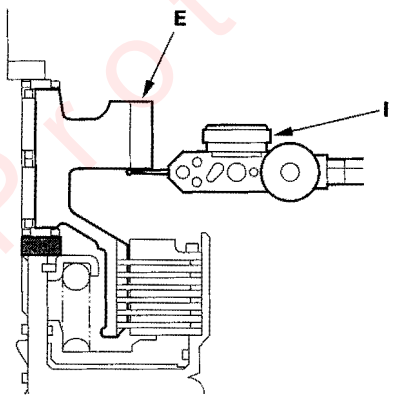

9. Hold the 27 x 47 x 5 mm thrust washer (G) against the clutch assembly (A), and measure the 2nd gear axial clearance in at least three places while moving the 2nd gear (E). Use the average as the actual clearance.

Standard: 0.04—0.12 mm (0.002—0.005 in.)

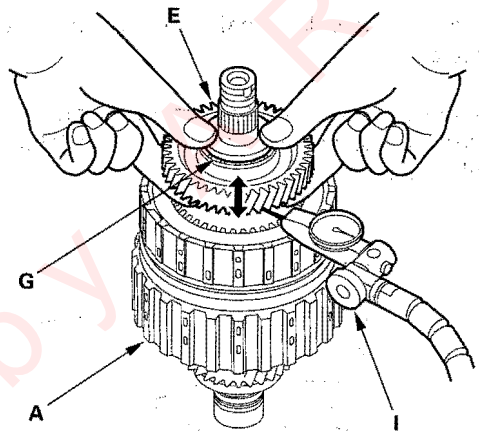

10. If the measurement is out of standard, remove the 37 x 55 mm thrust washer and measure its thickness.

11. Select and install a new thrust washer, then recheck the clearance.

THRUST SHIM, 37 x 55 mm

No.	Part Number	Thickness
1	90406-P0Z-000	4.90 mm (0.193 in.)
2	90407-P0Z-000	4.95 mm (0.195 in.)
3	90408-P0Z-000	5.00 mm (0.197 in.)
4	90409-P0Z-000	5.05 mm (0.199 in.)
5	90410-P0Z-000	5.10 mm (0.201 in.)
6	90411-P0Z-000	5.15 mm (0.203 in.)
7	90412-P0Z-000	5.20 mm (0.205 in.)

12. Disassemble the shaft and gears.

13. Reinstall the 27 x 47 x 5 mm thrust washer on the mainshaft.

Protected by

Secondary Shaft Idler Gear Bearing Replacement

Special Tools Required
- Driver 07749-0010000
- Attachment, 78 x 90 mm 07GAD-SD40101

1. Check the bearing for wear, damage, and rough movement. If the bearing is worn or damaged, go to step 2.
2. Place the secondary shaft idler gear in a vise with soft jaws.
3. Remove the bearing (A) from the secondary shaft idler gear (B) with a commercially available bearing puller (C).

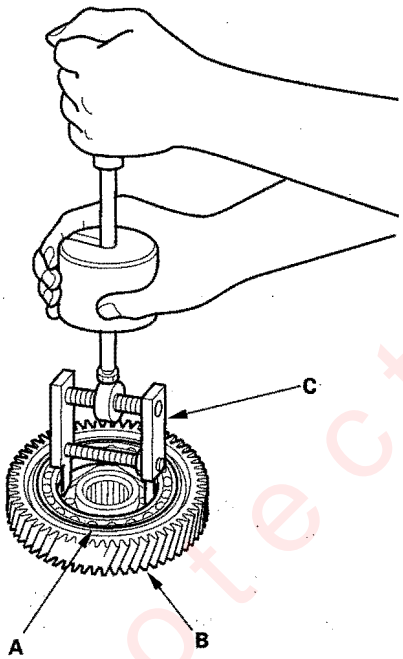

4. Install the bearing on the secondary shaft idler gear with the special tools and a press.

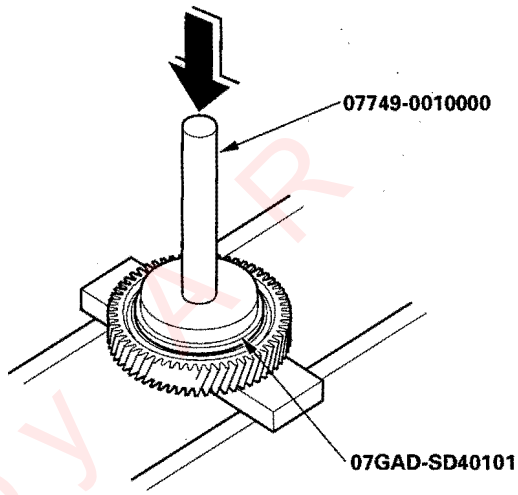

Protected by ARR

1st Gear One-way Clutch Inspection

1. Hold the 1st-hold clutch hub (A), and turn the 1st gear (B) in the direction shown to be sure it turns freely. Also make sure the 1st gear does not turn in the opposite direction.

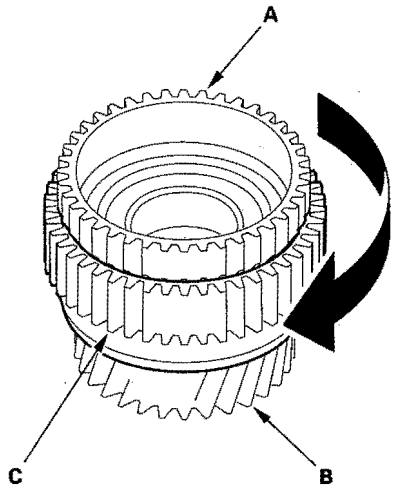

2. If any problem occurs on the 1st gear one-way clutch, replace the 1st clutch hub (C). The 1st gear one-way clutch is not available separately from the 1st clutch hub.

1st Clutch Hub Replacement

Special Tools Required
- Driver 07749-0010000
- Driver attachment 07947-6340500
- Attachment, 78 x 90 mm 07GAD-SD40101

1. Remove the 1st-hold clutch hub (A) from the 1st gear (B) with the special tools and a press.

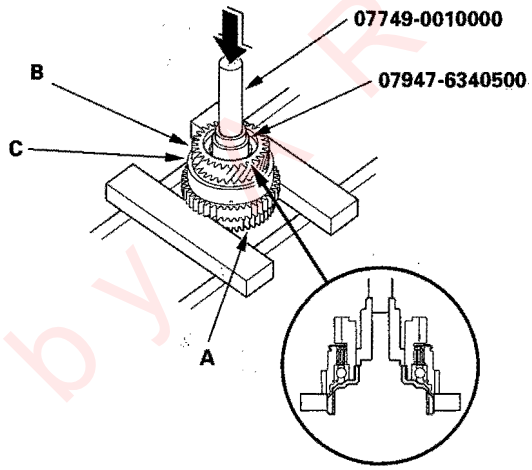

2. Remove the 1st clutch hub (C) from the 1st gear, then install the new 1st clutch hub in the 1st gear.

3. Install the 1st-hold clutch hub (A) in the 1st gear (B) with the special tools and a press.

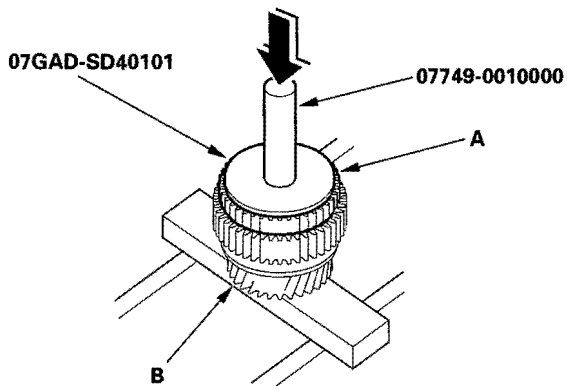

Protected by

Clutch Disassembly

Special Tools Required
- Clutch spring compressor attachment 07LAE-PX40100
- Clutch spring compressor attachment 07HAE-PL50101
- Clutch spring compressor bolt assembly 07GAE-PG40200 or 07GAE-PG4020A

1. Remove the snap ring (A), then remove the clutch end plate, the clutch discs, and the plates with a screwdriver (B).

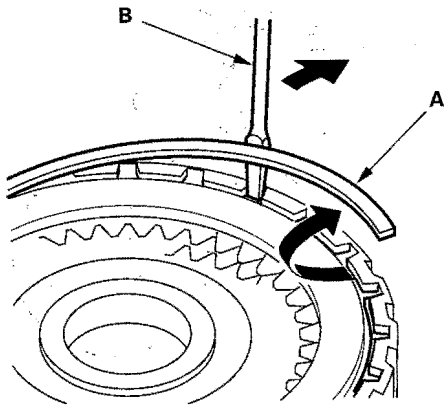

2. Remove the disc spring from the 1st, 3rd, 4th, and 5th clutches.

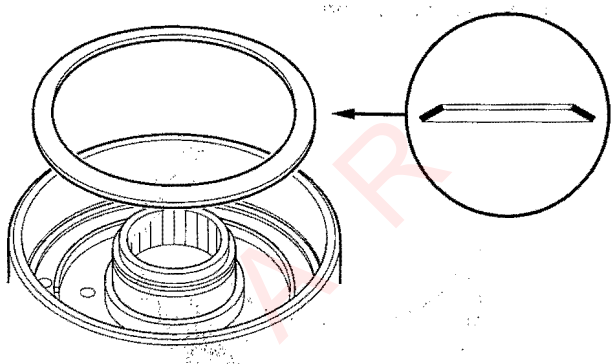

3. Install the special tools on the clutch assembly.

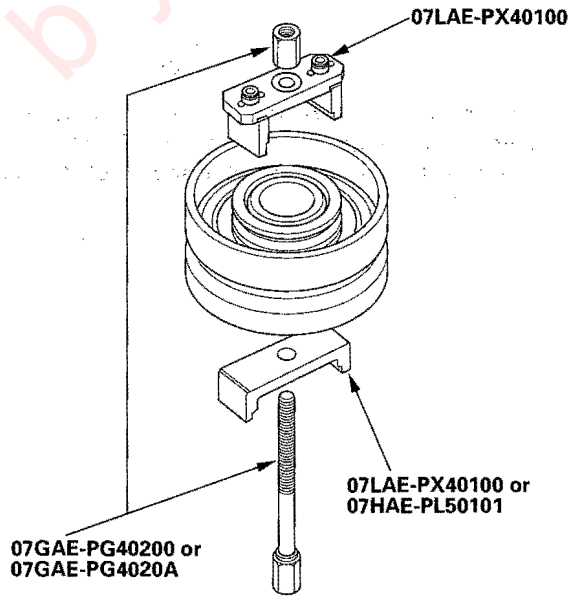

Protected by AR

4. Be sure the special tool (A) is adjusted to have full contact with the spring retainer (B) on the 1st, 4th and 5th clutches.

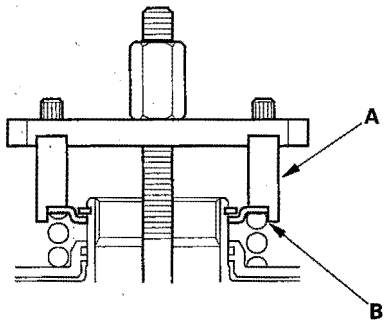

5. Set the special tool (A) on the spring retainer (B) of the 2nd and 3rd clutches in such a way that the special tool works on the clutch return spring (C).

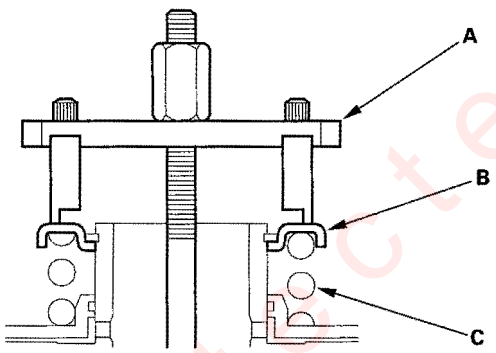

6. If either end of the special tool is set over an area of the spring retainer which is unsupported by the return spring, the retainer may be damaged.

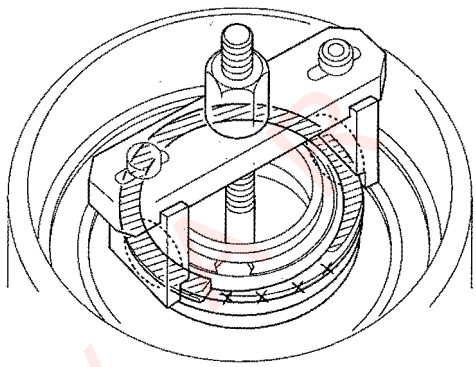

7. Compress the spring until the snap ring can be removed.

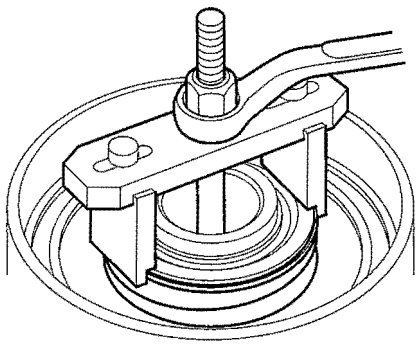

Protected by

(cont'd)

Clutch Disassembly (cont'd)

8. Remove the snap ring (A). Then remove the special tools (B), spring retainer (C), return spring.

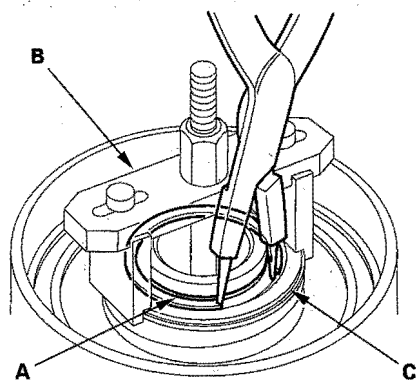

9. Wrap a shop rag around the clutch drum (A), and apply air pressure to the fluid passage to remove the piston (B). Place a finger tip on the other end while applying air pressure.

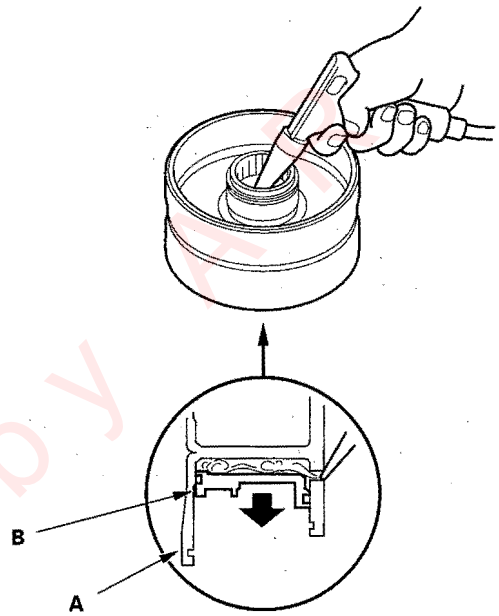

Protected by AM

Clutch Inspection

1st/1st-hold/2nd Clutch

1. Inspect the clutch piston and clutch piston check valve. If the clutch check valve is loose or stuck damaged, replace the clutch piston.

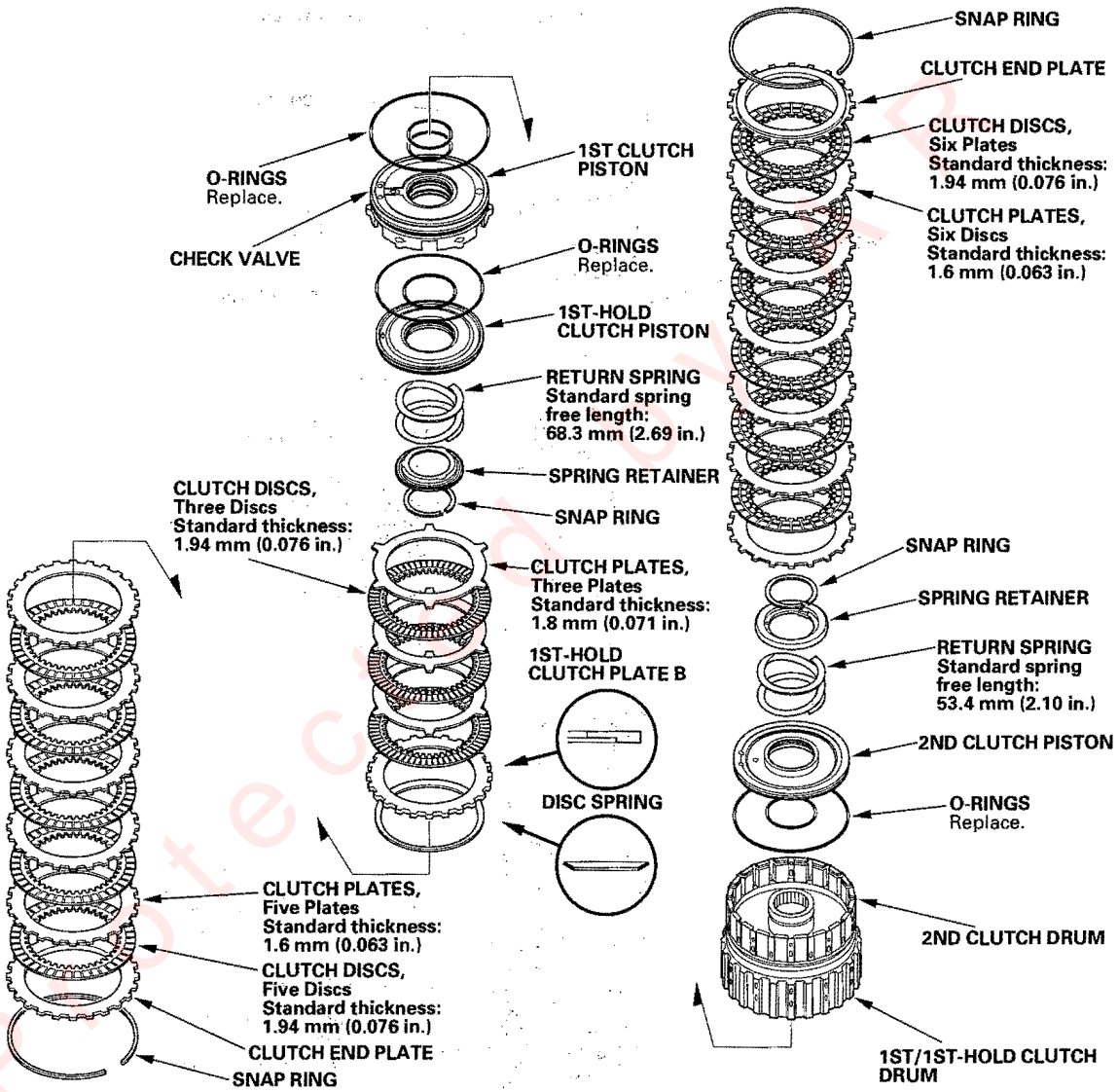

2. Check the spring retainer for wear and damage.

3. Inspect the clutch discs, clutch plates, and clutch end plate for wear, damage, and discoloration.

   - If the clutch discs are worn or damaged, replace the discs as a set.
   - If the clutch plates are worn, damaged, or discolored, replace the plates as a set.
   - If the clutch end plate is worn, damaged, or discolored, inspect the clutch end-plate-to-top-disc clearance, then replace the clutch-end-plate.
   - If the 1st-hold clutch plate B is worn, damaged, or discoloration, inspect the 1st-hold clutch plate B-to-top-disc clearance, then replace plate B.

(cont'd)

Clutch Inspection (cont'd)

3rd Clutch

1. Inspect the clutch piston and clutch piston check valve. If the clutch check valve is loose or stuck damaged, replace the clutch piston.

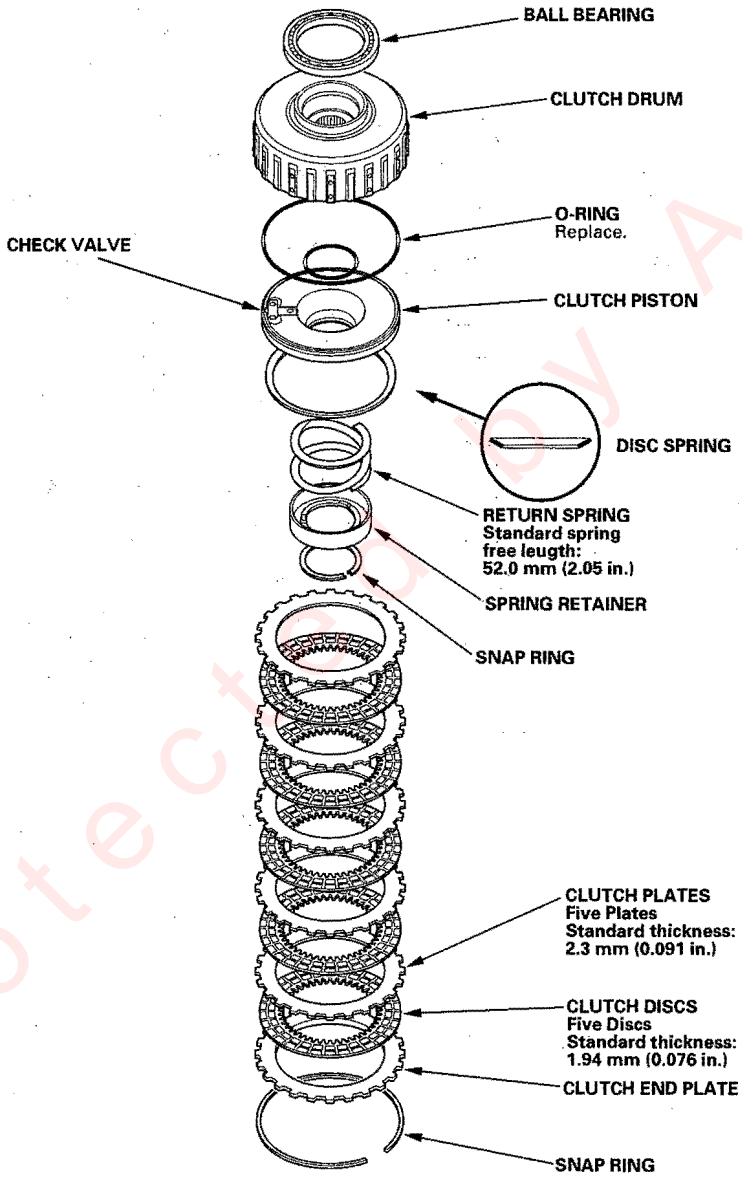

2. Check the spring retainer for wear and damage.

3. Inspect the clutch discs, clutch plates, and clutch end plate for wear, damage, and discoloration.

   - If the clutch discs are worn or damaged, replace the discs as a set.
   - If the clutch plates are worn, damaged, or discolored, replace the plates as a set.
   - If the clutch end plate is worn, damaged, or discolored, inspect the clutch end-plate-to-top-disc clearance, then replace the clutch end-plate.

Protected by A R

4th/5th Clutch

1. Inspect the clutch piston and clutch piston check valve. If the clutch check valve is loose or stuck damaged, replace the clutch piston.

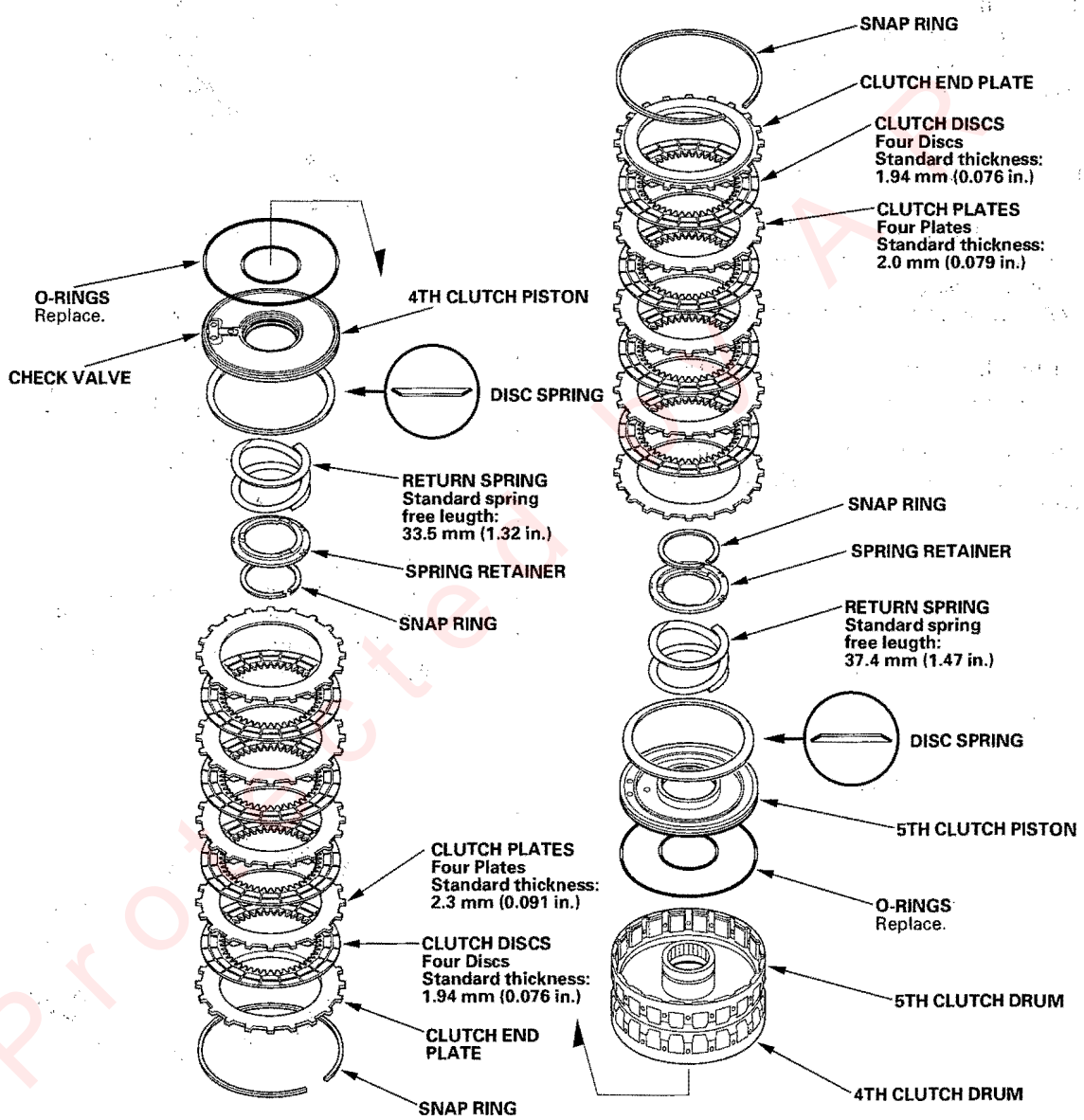

2. Check the spring retainer for wear and damage.

3. Inspect the clutch discs, clutch plates, and clutch end plate for wear, damage, and discoloration.

   - If the clutch discs are worn or damaged, replace the discs as a set.
   - If the clutch plates are worn, damaged, or discolored, replace the plates as a set.
   - If the clutch end plate is worn, damaged, or discolored, inspect the clutch end-plate-to-top-disc clearance, then replace the clutch end-plate.

Protected

Clutch Reassembly

Special Tools Required
- Clutch spring compressor attachment 07LAE-PX40100
- Clutch spring compressor attachment 07HAE-PL50101
- Clutch spring compressor bolt assembly 07GAE-PG40200 or 07GAE-PG4020A
- Clutch compressor attachment 07ZAE-PRP0100

Note these items during reassembly:

- Clean all parts thoroughly in solvent or carburetor cleaner, and dry them with compressed air.
- Blow out all passages.
- Apply ATF to all parts before assembly.

1. Soak the clutch discs thoroughly in ATF for a minimum of 30 minutes.

2. Inspect the check valve (A) on the clutch pistons (B). If the check valve is loose or stuck, replace the piston.

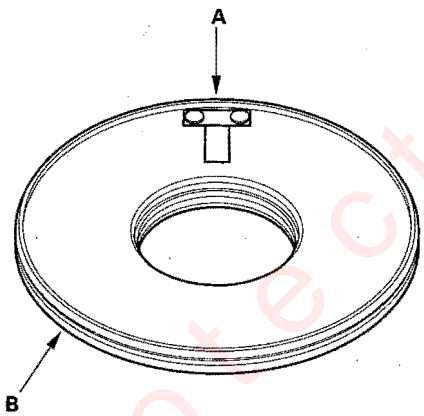

3. Install new O-rings (A) on the piston (B).

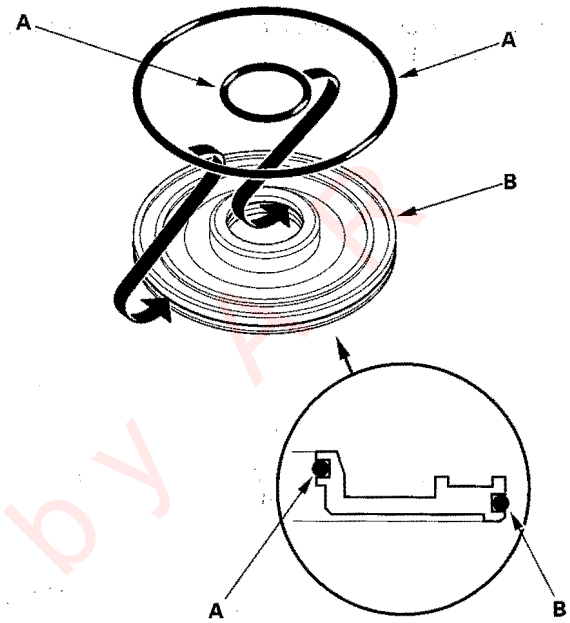

4. Install the piston (A) in the clutch drum (B). Apply pressure and rotate to ensure proper seating. Lubricate the piston O-ring with ATF before installing. Do not pinch the O-ring by installing the piston with too much force.

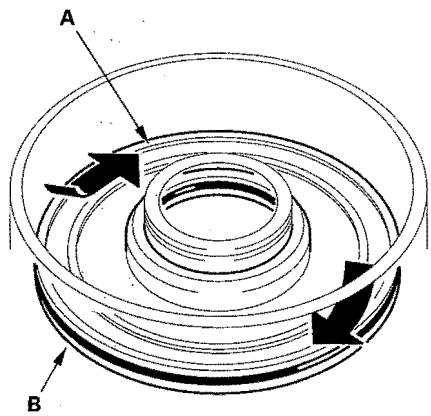

Protected by ACE

5. Check the 1st-hold clutch end-plate-to-top-disc clearance; starting with a clutch plate, alternately install the clutch plate and discs in the 1st-hold clutch drum, then install the 1st-hold clutch plate B.

6. Measure the 1st-hold clutch clearance between the 1st-hold clutch plate B and the top disc (A) with a feeler gauge (C) while pressing the 1st-hold clutch plate B down. Take measurements in at least three places, and use the average as the actual clearance.

1st-hold Clutch End-Plate (B) to-Top-disc Clearance
Service Limit: 0.5—0.9 mm (0.020—0.035 in.)

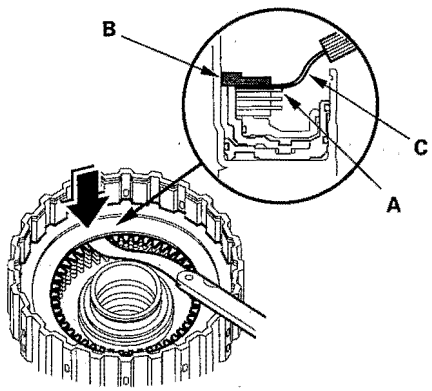

7. If the clearance is out of standard, replace the 1st-hold clutch plates and discs as a set, and recheck.

8. Install the return spring (A) and spring retainer (B), and position the snap ring (C) on the retainer.

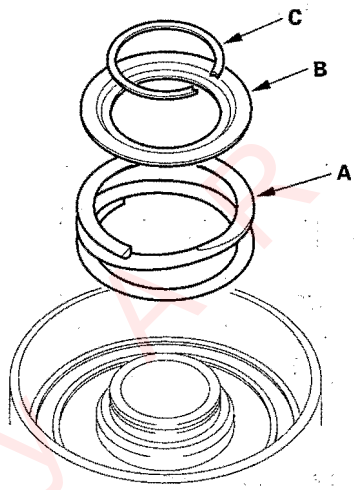

9. Install the special tools on the clutch assembly.

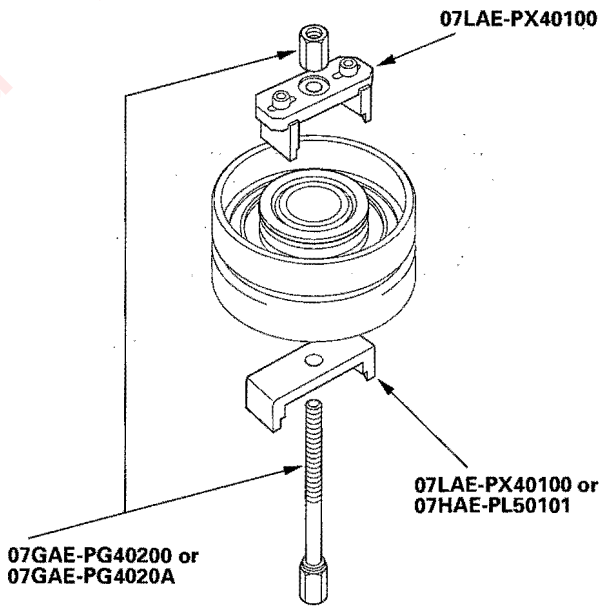

(cont'd)

Protected by AR

Clutch Reassembly (cont'd)

10. Be sure the special tool (A) is adjusted to have full contact with the spring retainer (B) on the 1st, 4th, and 5th clutches.

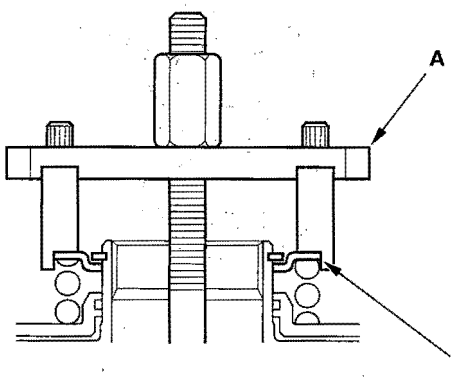

11. Set the special tool (A) on the spring retainer (B) of the 2nd and 3rd clutches so the tool works on the clutch return spring (C).

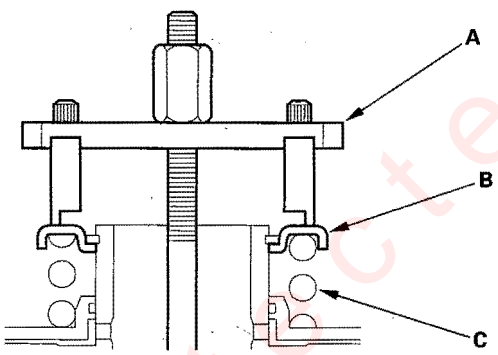

12. If either end of the special tool is set over an area of the spring retainer which is unsupported by the return spring, the retainer may be damaged.

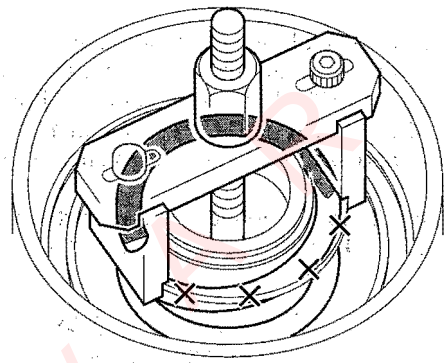

13. Compress the return spring.

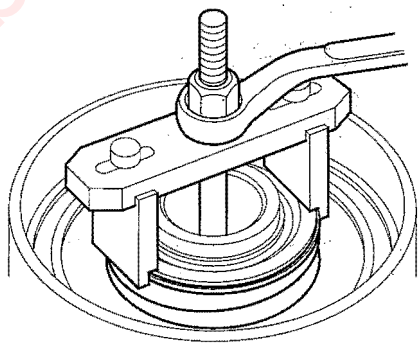

Protected by

14. Install the snap ring (A).

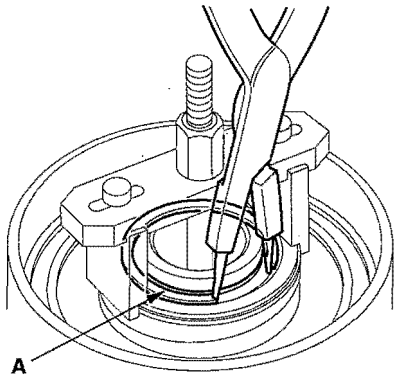

15. Remove the special tools.

16. Install the disc spring in the 1st, 3rd, 4th, and 5th clutches in the direction shown.

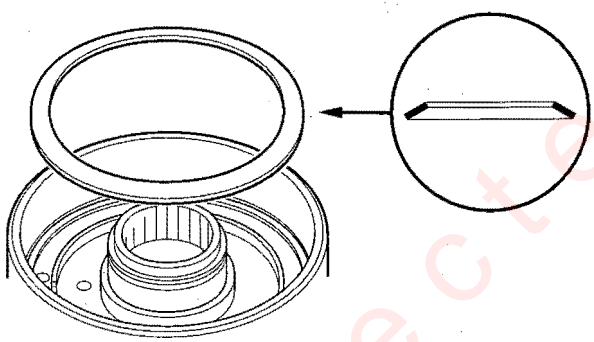

17. Make sure the inside of the clutch drum is free of dirt and other foreign particles.

18. Starting with a clutch plate, alternately install the clutch plates and discs. Install the clutch end plate (A) with the flat side toward the disc (B).

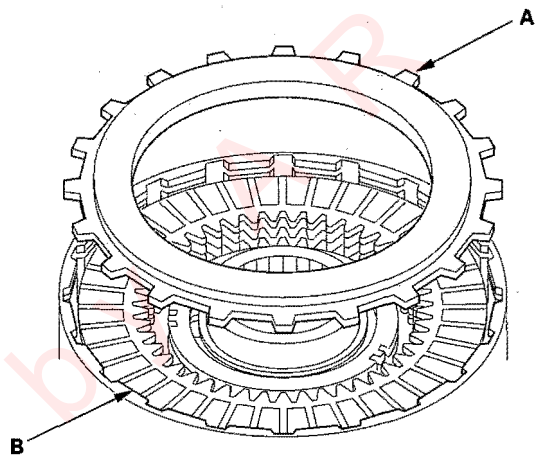

Protected by

(cont'd)

Clutch Reassembly (cont'd)

19. Install the snap ring (A) with a screwdriver (B).

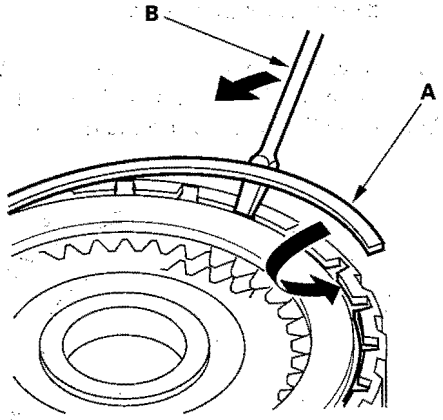

20. Set a dial indicator (A) on the clutch end plate (B).

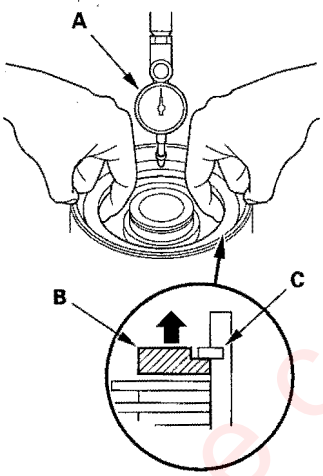

21. Zero the indicator with the clutch end plate lifted up to the snap ring (C).

22. Release the clutch end plate to lower it, then put the special tool on the end plate (A)

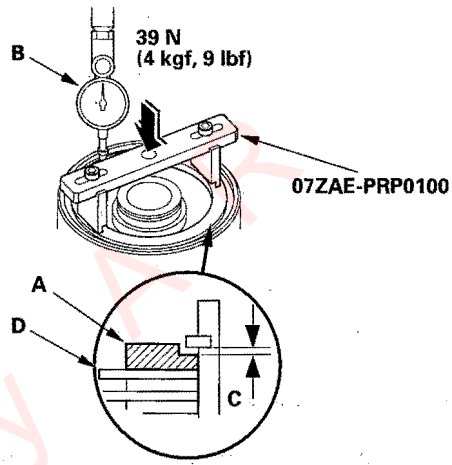

23. Press the special tool down with 39 N (4 kgf, 9 lbf) using a force gauge, and use a the dial indicator (B) to read the clearance between the clutch end plate and top disc (C). Take measurements in at least three places, and use the average as the actual clearance.

Clutch End-Plate-to-Top-Disc Clearance
Service Limit

1st Clutch:	**1.1—1.3 mm (0.043—0.051 in.)**
2nd Clutch:	**0.85—1.05 mm (0.033—0.041 in.)**
3rd Clutch:	**0.7—0.9 mm (0.028—0.035 in.)**
4th Clutch:	**0.55—0.75 mm (0.022—0.030 in.)**
5th Clutch:	**0.55—0.75 mm (0.022—0.030 in.)**

24. If the clearance is out of service limit, select a new clutch end plate from the following table. Install the new clutch end plate, then recheck the clearance.

NOTE: If the thickest clutch end plate is installed, but the clearance is still over the service limit, replace the clutch discs and plates.



Protected by ARK

1ST CLUTCH END PLATES

Mark	Part Number	Thickness
1	22551-P7W-003	3.1 mm (0.122 in.)
2	22552-P7W-003	3.2 mm (0.126 in.)
3	22553-P7W-003	3.3 mm (0.130 in.)
4	22554-P7W-003	3.4 mm (0.134 in.)
5	22555-P7W-003	3.5 mm (0.138 in.)
6	22556-P7W-003	3.6 mm (0.142 in.)
7	22557-P7W-003	3.7 mm (0.146 in.)
8	22558-P7W-003	3.8 mm (0.150 in.)
9	22559-P7W-003	3.9 mm (0.154 in.)

2ND CLUTCH END PLATES

Mark	Part Number	Thickness
1	22551-PY4-003	2.1 mm (0.083 in.)
2	22552-PY4-003	2.2 mm (0.087 in.)
3	22553-PY4-003	2.3 mm (0.091 in.)
4	22554-PY4-003	2.4 mm (0.094 in.)
5	22555-PY4-003	2.5 mm (0.098 in.)
6	22556-PY4-003	2.6 mm (0.102 in.)
7	22557-PY4-003	2.7 mm (0.106 in.)
8	22558-PY4-003	2.8 mm (0.110 in.)
9	22559-PY4-003	2.9 mm (0.114 in.)

3RD CLUTCH END PLATES

Mark	Part Number	Thickness
1	22551-RAY-A01	2.1 mm (0.083 in.)
2	22552-RAY-A01	2.2 mm (0.087 in.)
3	22553-RAY-A01	2.3 mm (0.091 in.)
4	22554-RAY-A01	2.4 mm (0.094 in.)
5	22555-RAY-A01	2.5 mm (0.098 in.)
6	22556-RAY-A01	2.6 mm (0.102 in.)
7	22557-RAY-A01	2.7 mm (0.106 in.)
8	22558-RAY-A01	2.8 mm (0.110 in.)
9	22559-RAY-A01	2.9 mm (0.114 in.)
10	22560-PVG-003	3.0 mm (0.118 in.)
11	22561-PVG-013	3.1 mm (0.122 in.)

4TH and 5TH CLUTCH END PLATES

Mark	Part Number	Thickness
1	22561-P7T-003	2.1 mm (0.083 in.)
2	22562-P7T-003	2.2 mm (0.087 in.)
3	22563-P7T-003	2.3 mm (0.091 in.)
4	22564-P7T-003	2.4 mm (0.094 in.)
5	22565-P7T-003	2.5 mm (0.098 in.)
6	22566-P7T-003	2.6 mm (0.102 in.)
7	22567-P7T-003	2.7 mm (0.106 in.)
8	22568-P7T-003	2.8 mm (0.110 in.)
9	22569-P7T-003	2.9 mm (0.114 in.)

Protected by AR

Valve Body and ATF Strainer Installation

1. Install the main separator plate (E) and three dowel pins on the torque converter housing (F).

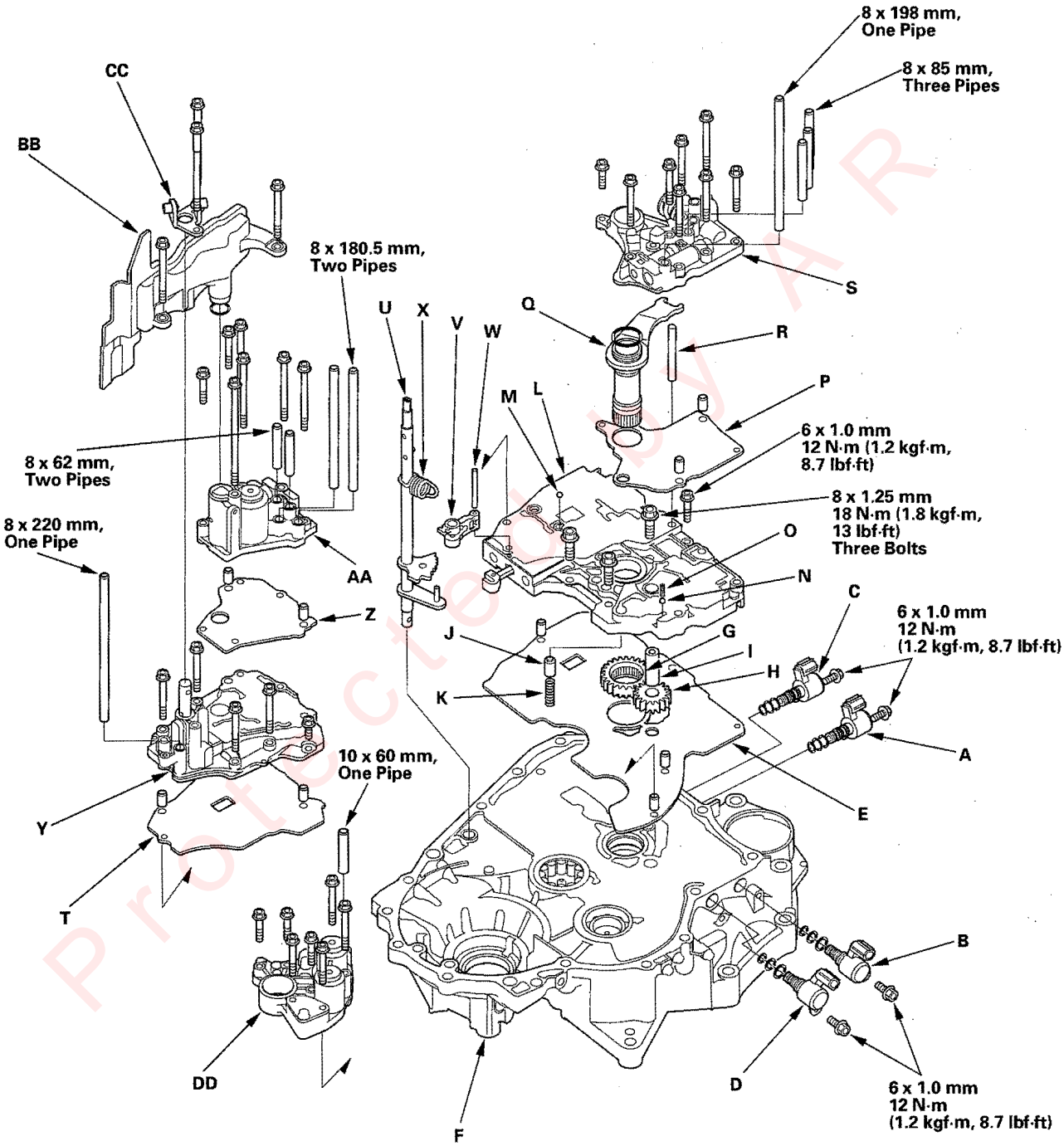

Protected by AR

2. Install the ATF pump drive gear (G), driven gear (H), and ATF pump driven gear shaft (I). Install the ATF pump driven gear with it grooved and chamfered side facing down.

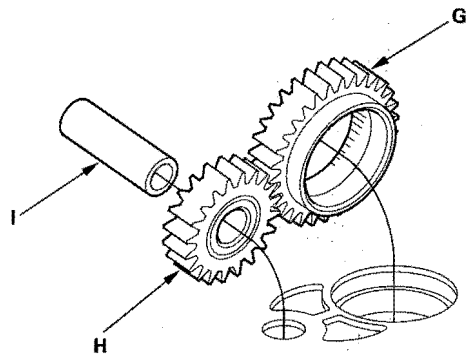

3. Install the torque converter check valve (J) and spring (K) in the main valve body (L), then install the main valve body.

4. Make sure the ATF pump drive gear (G) rotates smoothly in the normal operating direction, and the ATF pump driven gear shaft (I) moves smoothly in the axial and normal operating direction.

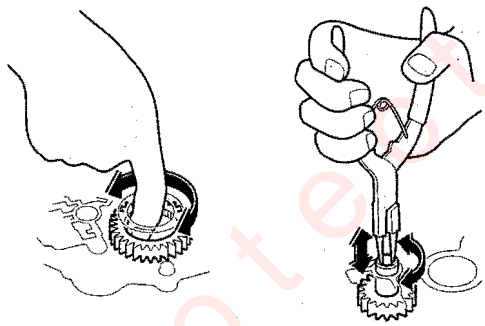

5. If the ATF pump drive gear and ATF pump driven gear shaft do not move smoothly, loosen the main valve body bolts. Realign the ATF pump driven gear shaft, and retighten the bolts to the specified torque, then recheck. Failure to align the ATF pump driven gear shaft correctly will result in a seized ATF pump drive gear or ATF pump driven gear shaft.

6. Make sure that the one check ball (M) and the cooler check valve (N) are in the main valve body, then install the cooler check valve spring (O) on the cooler check valve.

7. Install the regulator separator plate (P) and two dowel pins.

8. Install the new O-ring on the stator shaft (Q), and install it and stator shaft stop (R).

9. Install the regulator valve body (S) (eight bolts).

10. Install the servo separator plate (T) and two dowel pins.

11. Install the control shaft (U) in the torque converter housing along with the manual valve.

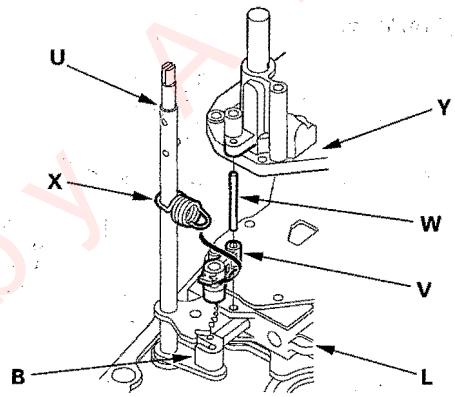

12. Install the detent arm (V) and arm shaft (W) in the main valve body (L), then hook the detent arm spring (X) to the detent arm.

13. Install the servo body (Y) (five bolts).

14. Install the top accumulator separator plate (Z) and two dowel pins, then install the top accumulator body (AA) (seven bolts).

15. Install the new O-ring on the ATF strainer (BB), and install it in the top accumulator body (two bolts).

16. Install the servo detent base (CC) (two bolts).

17. Install the accumulator body (DD) (seven bolts).

18. Install the 8 x 198 mm pipe, and three 8 x 85 mm pipes in the regulator valve body.

19. Install two 8 x 180.5 mm pipes, and two 8 x 62 mm pipes in the top accumulator body.

20. Install the 8 x 220 mm pipe in the servo body.

21. Install the 10 x 60 mm pipe in the accumulator body.

22. Install shift solenoid valves A, B, C, and torque converter clutch solenoid valve (D) with the new O-rings.

Protected by AP

Shaft Assembly and Housing Installation

1. Install the differential assembly (A) in the torque converter housing (B).

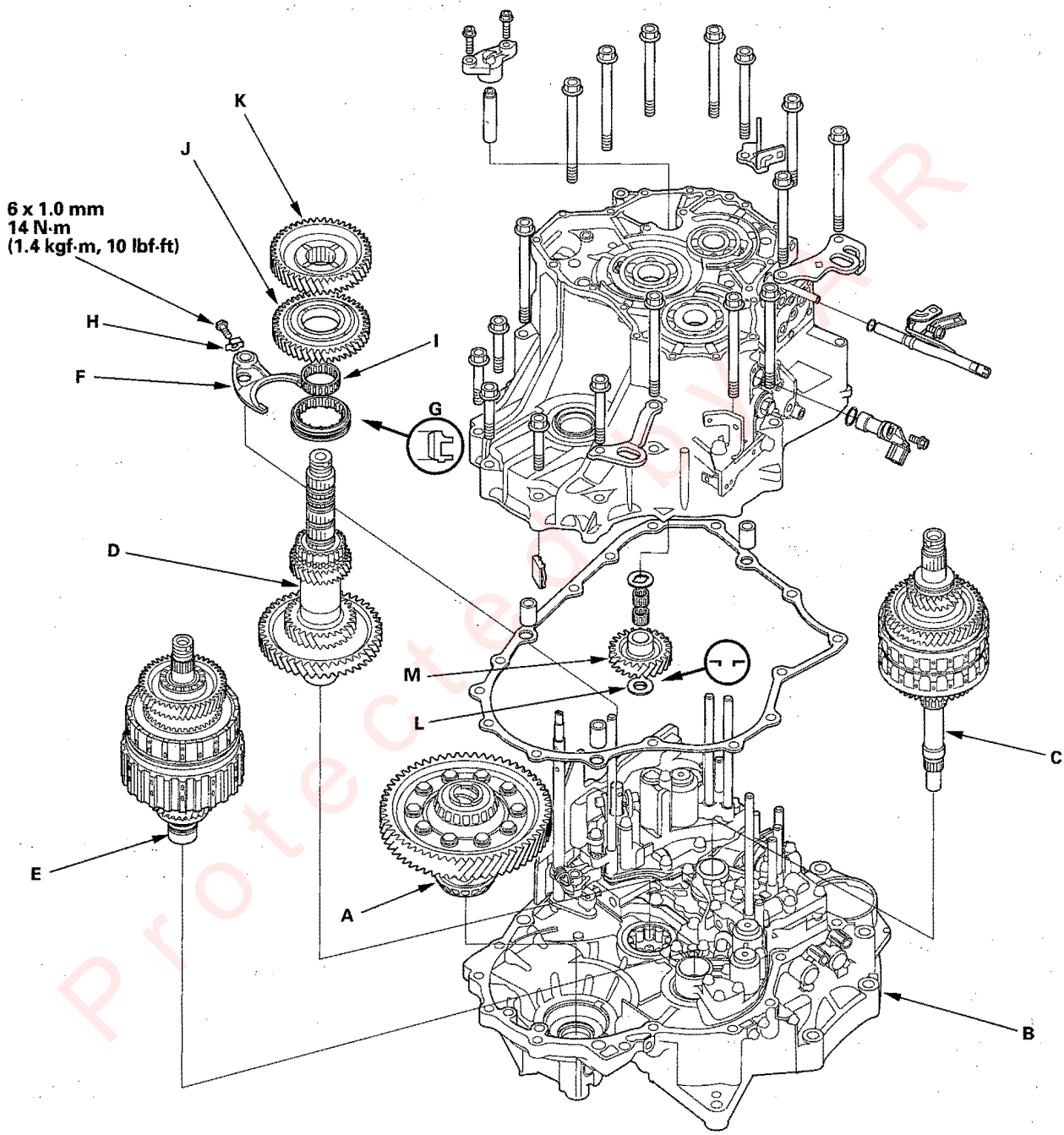

Protected by

2. If the reverse selector hub is press-fitted type, join the mainshaft (C), countershaft (D), and secondary shaft (E) together, then install them in the torque converter housing.

3. If the reverse selector hub in not press-fitted type, install the countershaft, mainshaft, and secondary shaft in the torque converter housing, then install the countershaft 5th gear and reverse selector hub on the countershaft.

4. Turn the shift fork shaft so the large chamfered hole is facing the fork bolt hole.

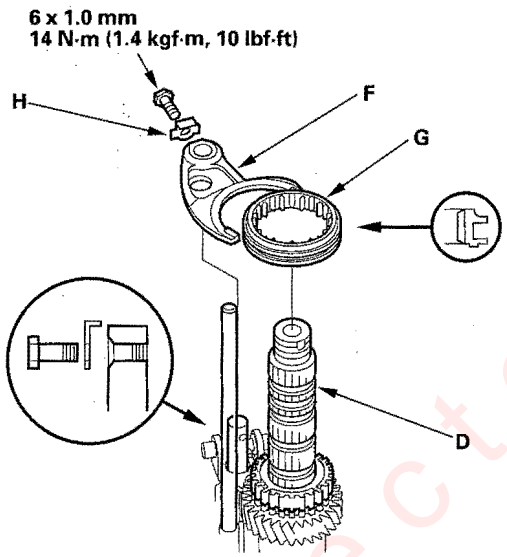

5. Install the shift fork (F) and reverse selector (G) together on the shift fork shaft and countershaft (D). Install the reverse selector in the direction shown.

6. Secure the shift fork to the shift fork shaft with the lock bolt and a new lock washer (H), then bend the lock washer against the lock bolt head.

7. Install the needle bearing (I), countershaft reverse gear (J), and countershaft 2nd gear (K) on the countershaft.

8. Place the thrust washer (L) in the transmission housing.

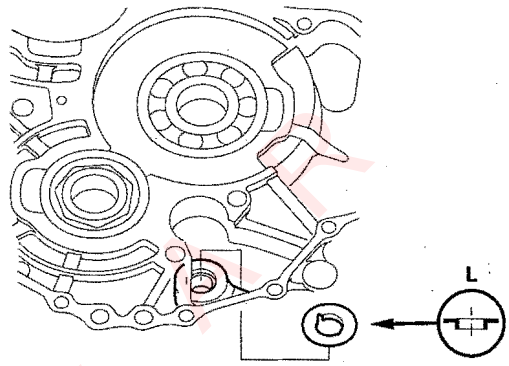

9. Place the reverse idler gear (M) in the transmission housing, and slide it in the direction shown.

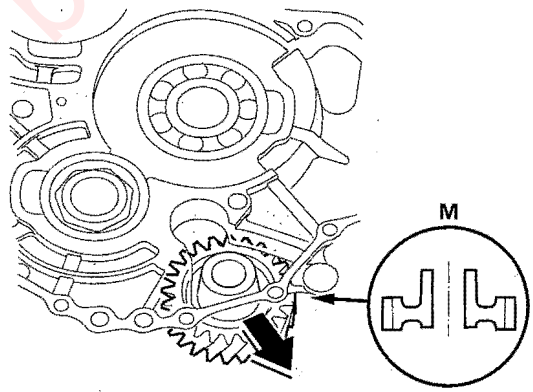

(cont'd)

Protected by

Shaft Assembly and Housing Installation (cont'd)

10. Align the spring pin (A) on the control shaft (B) with the transmission housing groove (C) by turning the control shaft.

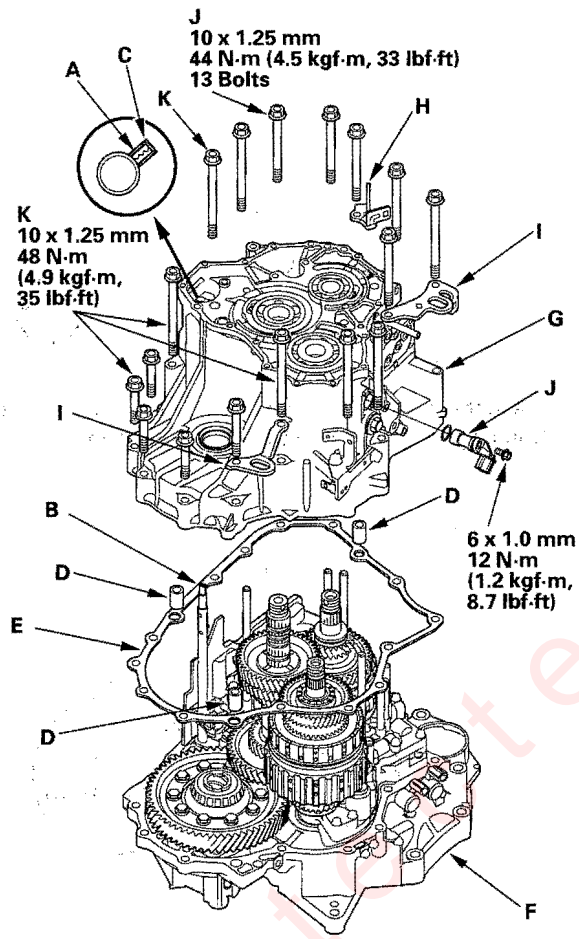

11. Install three dowel pins (D) and a new gasket (E) on the torque converter housing (F).

12. Place the transmission housing (G) on the torque converter housing, then install the transmission housing mounting bolts along with the harness clamp bracket (H) and transmission hangers (I).

13. Tighten the 13 mounting bolts (J) to 44 N·m (4.5 kgf·m, 33 lbf·ft) in two or more steps in a crisscross pattern, and tighten the four bolts (K) to 48 N·m (4.9 kgf·m, 35 lbf·ft).

14. Install the new O-ring on the output shaft (countershaft) speed sensor (J), then install it in the transmission housing.

15. Engage the reverse idler gear with the countershaft reverse gear and mainshaft reverse gear. Then install the needle bearings (A), reverse idler gear shaft (B), and thrust washer (C) in the reverse idler gear, and install the reverse idler gear shaft holder (D) on the transmission housing.

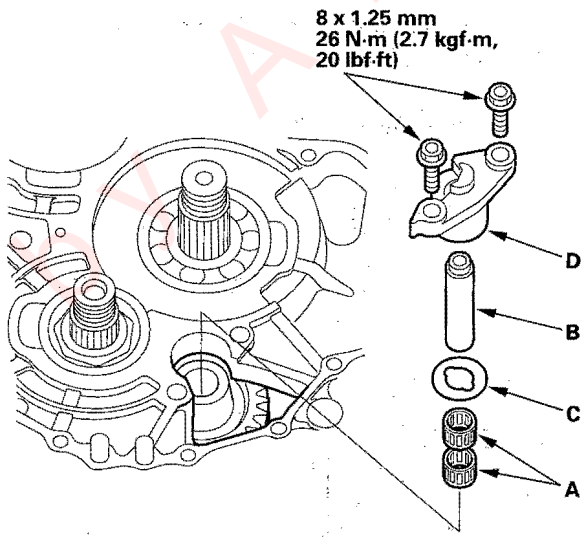

Protected by AR

End Cover, 3rd Gear, Idler Gear, and 3rd Clutch Installation

Special Tools Required
- Mainshaft holder
  07GAB-PF50101 or 07GAB-PF50100
- Adjustable bearing puller, 25—40 mm
  07736-A01000B or 07736-A01000A

1. Install the park lever (A) and park lever stop (B), on the control shaft (C), then install the lock bolt (D) with a new lock washer (E). Do not bend the lock tab of the lock washer until step 28.

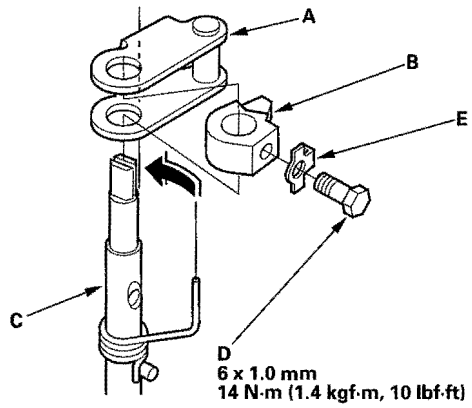

2. Lubricate the following parts with ATF:
   - Splines of the countershaft, the park gear, and the old locknut.
   - Threads of the countershaft and the old locknut.
   - Old conical spring washer.

3. Install the park gear (A) using the old locknut (B) and a collar (C). Hold the park pawl (D) against the park gear, then tighten the old locknut until the shaft splines come out over the park gear splines.

   NOTE:
   - Do not use an impact wrench.
   - Countershaft locknut has left-hand threads.

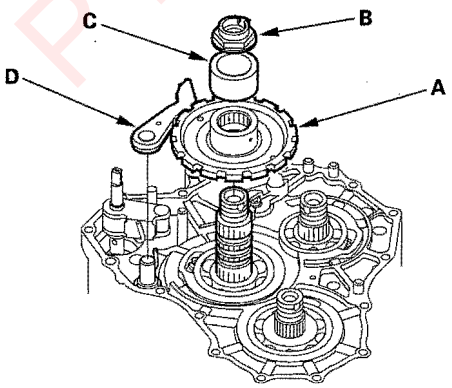

4. Remove the locknut and collar.

5. Install the thrust needle bearing (A), needle bearing (B), 3rd gear (C), thrust needle bearing (D), 31 x 63.5 mm splined washer (E), 3rd clutch assembly (F), and old conical spring washer (G) on the countershaft (H). Tighten the old locknut (I) to 226 N·m (23.0 kgf·m, 166 lbf·ft).

   NOTE: Use a torque wrench to tighten the locknut. Do not use an impact wrench.

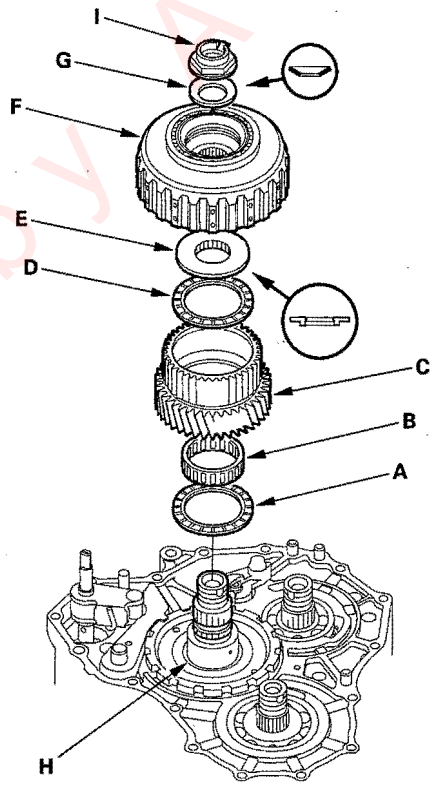

(cont'd)

End Cover, 3rd Gear, Idler Gear, and 3rd Clutch Installation (cont'd)

6. Set the dial indicator (A) to the countershaft 3rd gear (B).

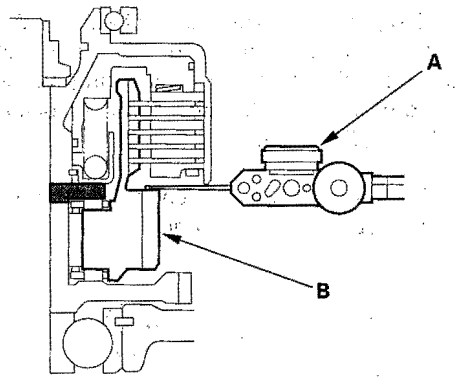

7. Measure the countershaft 3rd gear axial clearance in at least three places, while moving the countershaft 3rd gear (A).
   Use the average as the actual clearance.

   If the clearance is out of standard, select the appropriate 31 x 63.5 mm splined washer in step 16.

   Standard: 0.015 – 0.045 mm (0.0006 – 0.0018 in.)

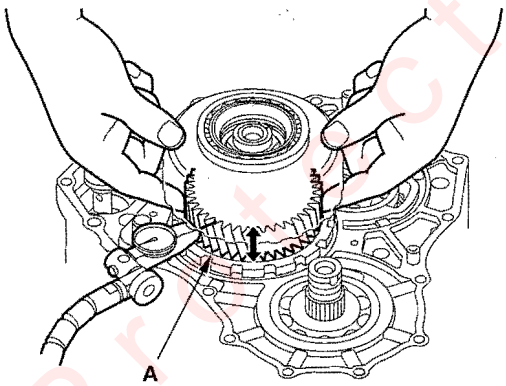

8. Remove the locknut and conical spring washer.

9. Remove the 3rd clutch assembly (A) with the special tool and a commercially available 3/8-16" slide hammer (B).

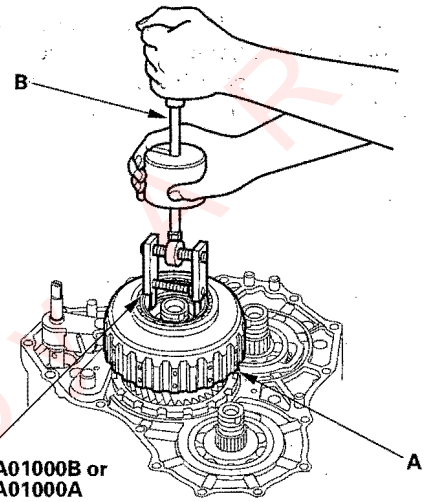

10. Remove the parts that were installed in step 5.

11. Install the special tool onto the mainshaft.

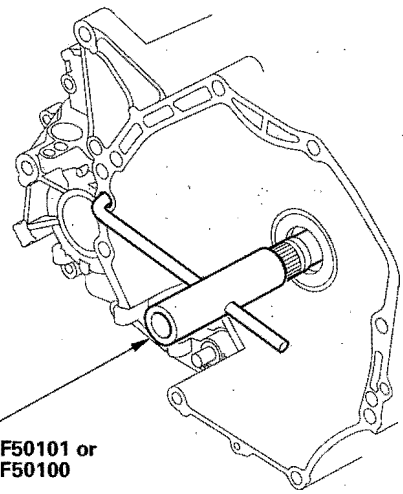

Protected by

12. Lubricate the following parts with ATF:

    - Splines of the mainshaft 3rd gear and secondary shaft idler gear.
    - Threads of the mainshaft and secondary shaft.
    - Threads of the old mainshaft and secondary shaft locknuts.
    - Old conical spring washer.

13. Install the mainshaft 3rd gear (A) and the old conical spring washer (B) on the mainshaft (C). Tighten the old locknut (D) to seat the 3rd gear to 226 N·m (23.0 kgf·m, 166 lbf·ft).

    NOTE: Use a torque wrench to tighten the locknut. Do not use an impact wrench.

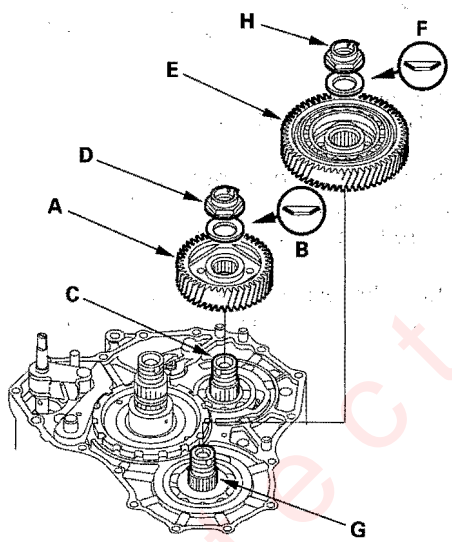

14. Install the secondary shaft idler gear (E) and the old conical spring washer (F) on the secondary shaft (G). Tighten the old locknut (H) to seat the secondary shaft idler gear to 226 N·m (23.0 kgf·m, 166 lbf·ft).

    NOTE:
    - Use a torque wrench to tighten the locknut. Do not use an impact wrench.
    - Secondary shaft locknut has left-hand threads.

15. Remove the old locknuts and old conical spring washers from the mainshaft and secondary shaft.

16. If the 3rd gear axial clearance is out of standard (measured in step 7), measure the difference of the 31 x 63.5 mm splined washer, and select the appropriate splined washer from the table.



SPLINED WASHER, 31 x 63.5 mm

Mark	Part Number	Difference
A	90520-P7W-010	3.503 mm (0.1379 in.)
B	90521-P7W-010	3.490 mm (0.1374 in.)
C	90522-P7W-010	3.477 mm (0.1369 in.)
D	90523-P7W-010	3.464 mm (0.1364 in.)

17. Install the thrust needle bearing (A), needle bearing (B), 3rd gear (C), thrust needle bearing (D), and 31 x 63.5 mm splined washer (E) on the countershaft (F).

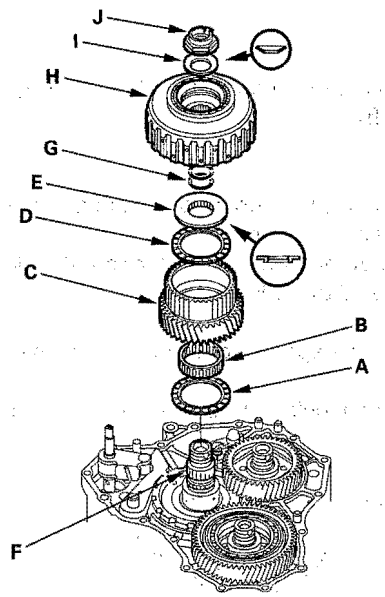

18. Wrap the shaft splines with tape to prevent O-ring damage, then install new O-rings (G).

19. Remove the tape, then install the 3rd clutch assembly (H), and old conical spring washer (I). Tighten the old locknut (J) to 226 N·m (23.0 kgf·m, 166 lbf·ft).

    NOTE: Use a torque wrench to tighten the locknut. Do not use an impact wrench.

(cont'd)

Protected by R

End Cover, 3rd Gear, Idler Gear, and 3rd Clutch Installation (cont'd)

20. Remove the old locknut and old conical spring washer from the countershaft.

21. Lubricate the threads of each shaft, the new locknuts, and new conical spring washers with ATF.

22. Install the new conical spring washers (A) in the direction shown, and install the new locknuts (B).

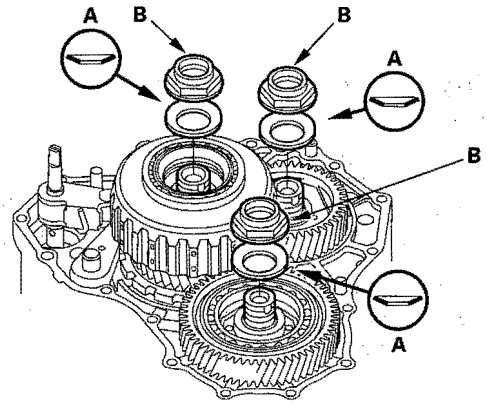

23. Tighten the locknuts to 167 N·m (17.0 kgf·m, 123 lbf·ft).

NOTE:
- Use a torque wrench to tighten the locknuts. Do not use an impact wrench.
- Countershaft and secondary shaft locknuts have left-hand threads.

24. Remove the special tool from the mainshaft.

25. Stake each locknut into its shaft using 3.5 mm punch.

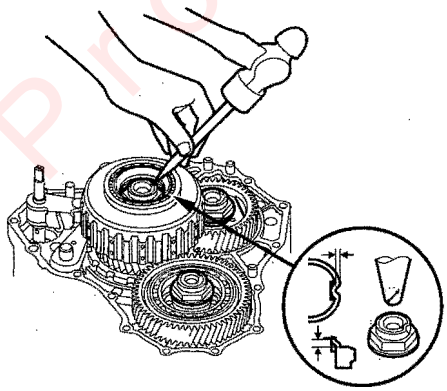

26. Set the park lever in P position, then verify that the park pawl (A) engages the park gear (B).

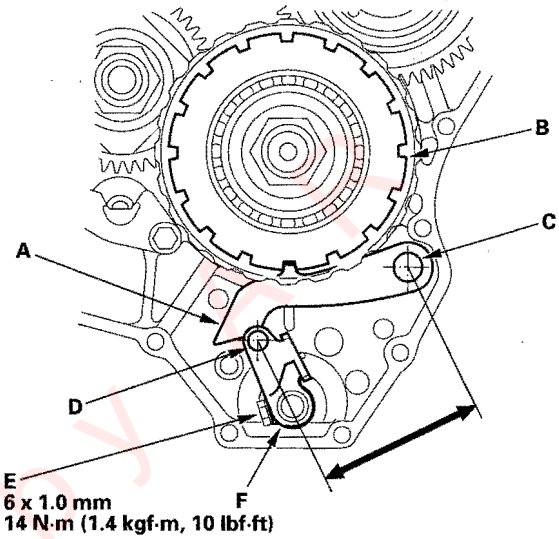

27. If the park pawl does not engage fully, check the distance between the pawl shaft (C) and the park lever roller pin (D) (see page 14-254).

28. Tighten the lock bolt (E), and bend the lock tab of the lock washer (F) against the lock bolt head.

Protected by

29. Install the new gasket (A) on the transmission housing, and install the two dowel pins (B) and new O-rings (C) over the top of the ATF feed pipes.

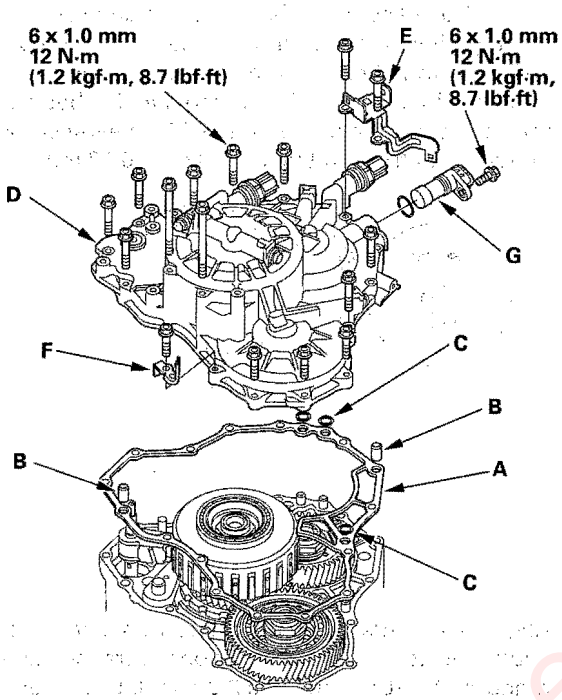

30. Install the end cover (D), and install the 16 bolts, connector bracket (E) and harness holder bracket (F).

31. Tighten the bolts in two or more steps in a crisscross pattern.

32. Install the new O-ring on the input shaft (mainshaft) speed sensor (G), then install it in the end cover.

33. Install the 8 x 12 mm ATF feed pipe (A) with its filter side into the transmission housing.

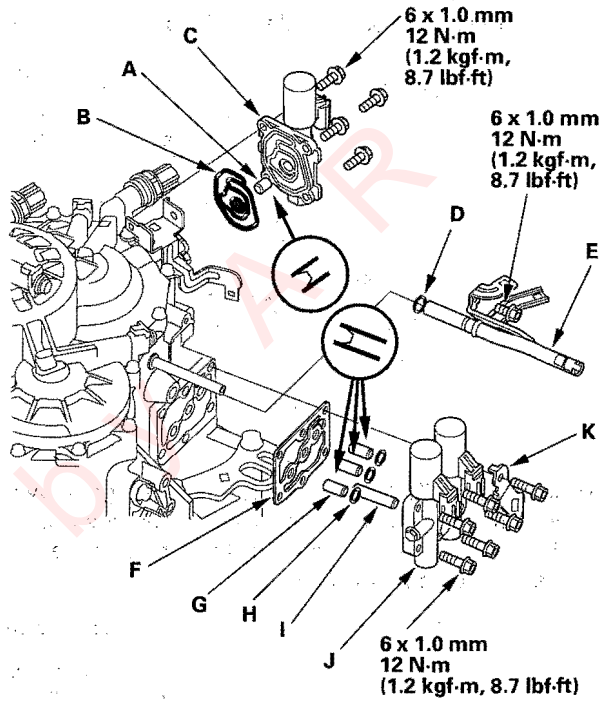

34. Install the new gasket (B) in the mounting groove of the A/T clutch pressure control solenoid valve C body (C) properly, then install them on the transmission housing. Do not pinch the gasket.

35. Install the new O-ring (D) on the ATF dipstick guide pipe (E), then install in the transmission housing.

36. Place the new gasket (F) on the transmission housing, then install the 8 x 18 mm ATF feed pipes (G) with their filter side into the transmission housing.

37. Install the new O-rings (H) over the feed pipes, and install the 8 x 40 mm ATF feed pipe (I).

38. Install the A/T clutch pressure control solenoid valves A and B (J) and the harness clamp bracket (K).

(cont'd)

Protected by AR

End Cover, 3rd Gear, Idler Gear, and 3rd Clutch Installation (cont'd)

39. Install the new gasket (A) on the transmission housing, then install the 8 x 14 mm dowel pin (B), 10 x 25.5 mm ATF feed pipe (C), and new O-ring (D) over the feed pipe. Install the ATF passage body (E).

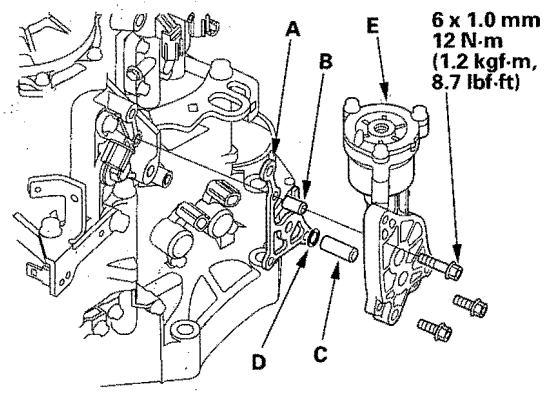

40. Install the ATF line (A) on the ATF passage body (B) with the line bolt and new sealing washers (C). Secure the ATF line with the 6 mm bolt on the harness clamp bracket (D).

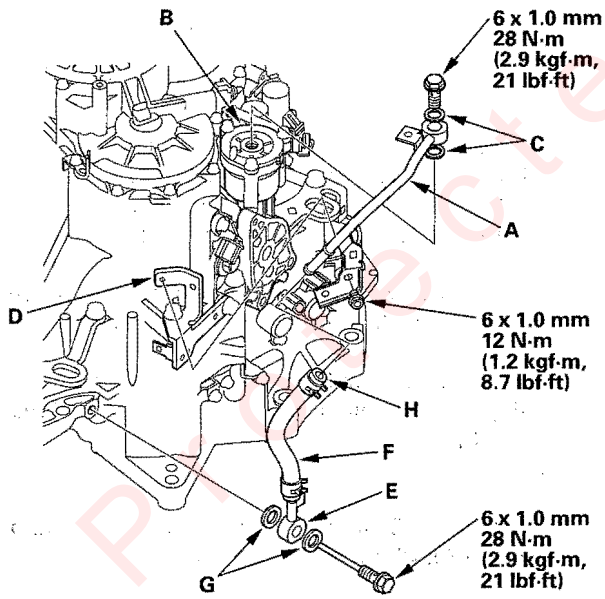

41. Install the ATF line (E) and hose (F) on the torque converter housing with the line bolt and new sealing washers (G).

42. Connect the ATF hose to the line, and secure the hose with hose clamp (H).

43. Set the control shaft to the N position by turning the control shaft.

NOTE: Do not squeeze the end of the control shaft tips together when turning the shaft. If the tips are squeezed together it will cause a faulty shift position signal or position due to the play between the control shaft and the switch. The clearance (A) between control shaft tips is 2.0 mm (0.08 in.)

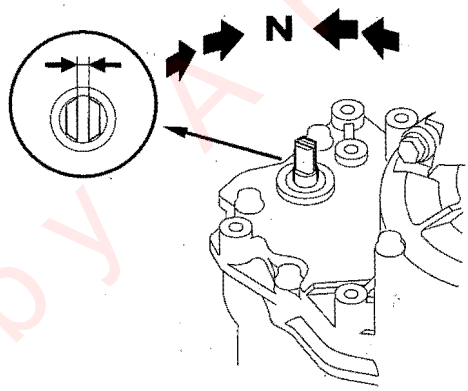

44. Align the cutouts (A) on the rotary-frame with the neutral positioning cutouts (B) on the transmission range switch (C), then put a 2.0 mm (0.08 in.) feeler gauge blade (D) in the cutouts to hold the switch in the N position.

NOTE: Be sure to use a 2.0 mm (0.08 in.) blade or equivalent to hold the switch in the N position.

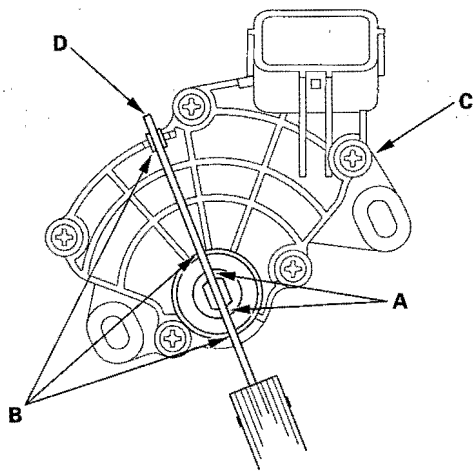

Protected by AR

45. Install the transmission range switch (A) gently on the control shaft (B) with holding it in the N position with the 2.0 mm (0.08 in.) blade (C).

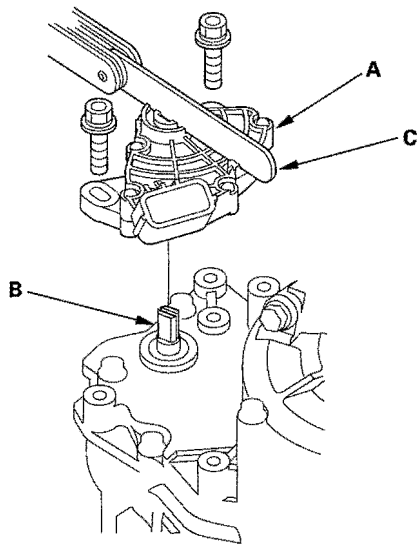

46. Tighten the bolts on the transmission range switch while you continue to hold it in the N position. Do not move the transmission range switch when tightening the bolts. Remove the feeler gauge.

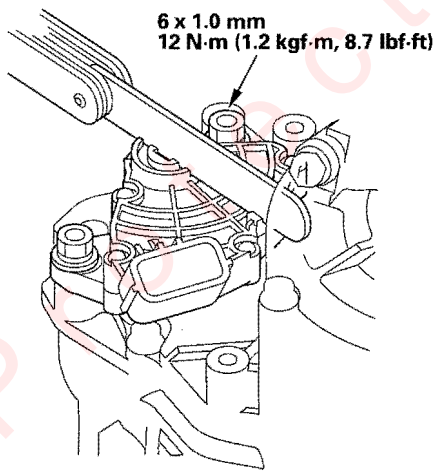

47. Connect the transmission range switch connector (A) securely, then secure the switch harness on the end cover, harness cover bracket (B), and the clamp bracket (C).

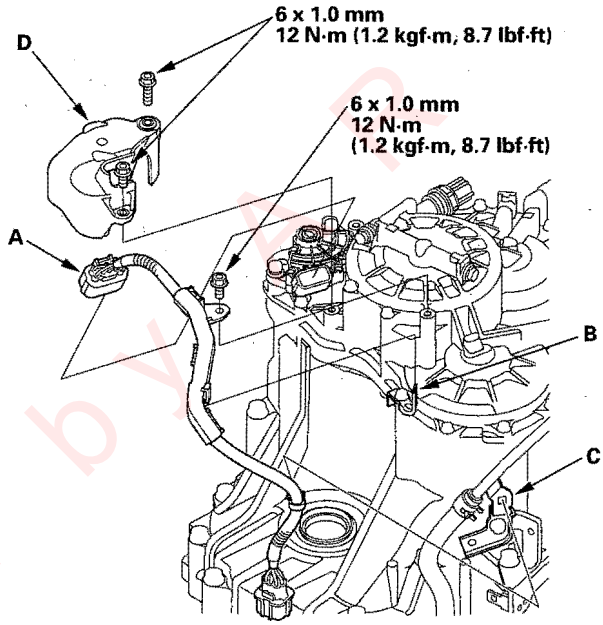

48. Install the transmission range switch cover (D).

(cont'd)

End Cover, 3rd Gear, Idler Gear, and 3rd Clutch Installation (cont'd)

49. Connect the 3rd clutch transmission fluid pressure switch connector (A), and install the ground terminal (B) and harness clamp (C) on the connector bracket (D).

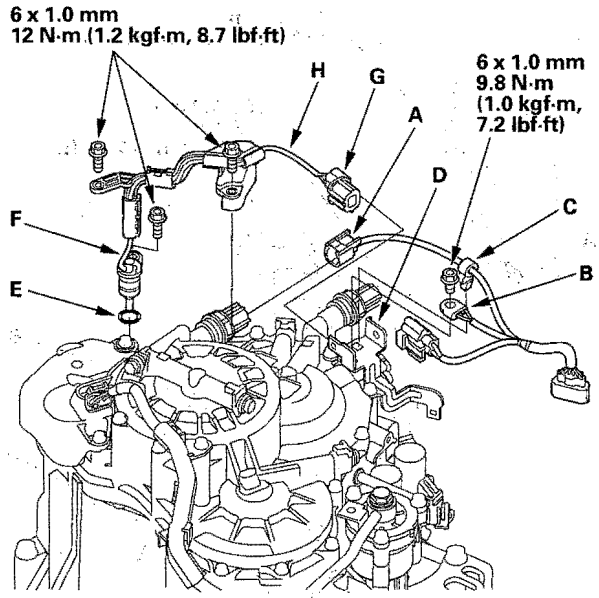

50. Install the new O-ring (E) on the ATF temperature sensor (F), then install the sensor in the end cover.

51. Connect the sensor connector (G), and install it on the connector bracket. Secure the sensor harness (H) on the end cover.

52. Install the dipstick in the dipstick guide pipe.

Protected by AR

Component Location Index

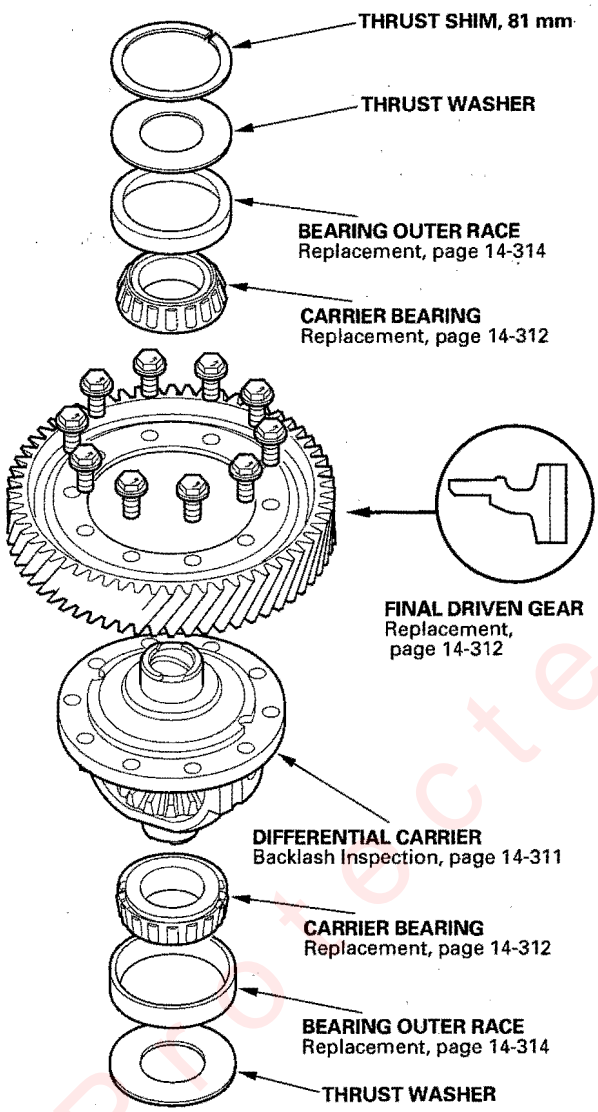

Backlash Inspection

1. Install both axles, and place the differential assembly on V-blocks (A).

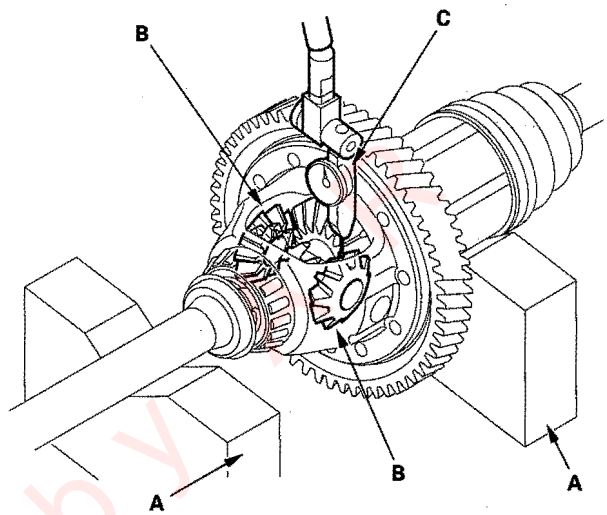

2. Check the backlash of the pinion gears (B) with a dial indicator (C).

   Standard: 0.05—0.15 mm (0.002—0.006 in.)

3. If the backlash is out of standard, replace the differential carrier.

Protected by

Differential Carrier, Final Driven Gear Replacement

1. Remove the final driven gear from the differential carrier.

   NOTE: The final driven gear bolts have left-hand threads.

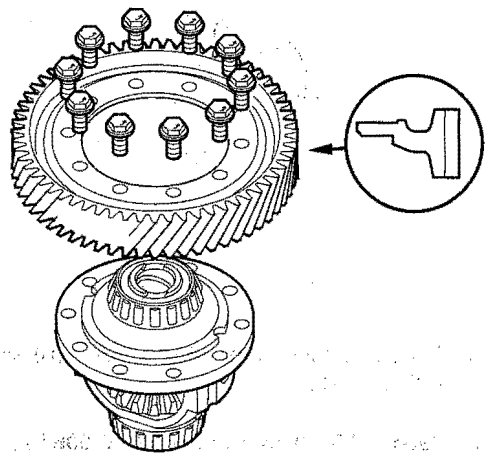

2. Install the final driven gear with the chamfered side on the inner bore facing the differential carrier.

3. Tighten the bolts to the specified torque in a crisscross pattern.

   Torque: 101 N·m (10.3 kgf·m, 74.5 lbf·ft)

Carrier Bearing Replacement

Special Tools Required
Attachment, 40 x 50 mm 07LAD-PW50601

NOTE:
- The bearing and outer race should be replaced as a set.
- Inspect and adjust the bearing preload whenever bearing is replaced.
- Check the bearing for wear and rough rotation. If the bearing is OK, removal is not necessary.

1. Remove the carrier bearing (A) with a commercially available bearing puller (B), bearing separator (C), and stepped adapter (D).

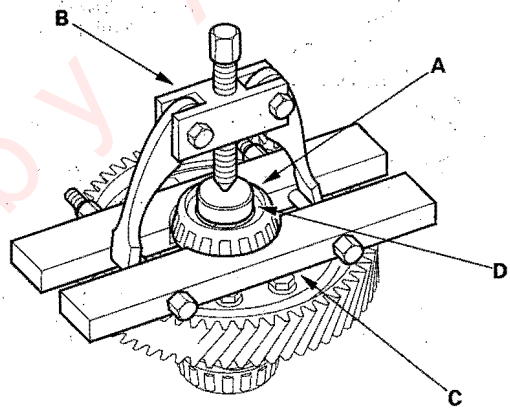

2. Install the new carrier bearings with the special tool and a press.

   NOTE:
   - Press the bearing on until it bottoms out.
   - Use the small end of the special tool to install the bearing.
   - Press the bearing on securely so there is no clearance between the bearing and the differential carrier.

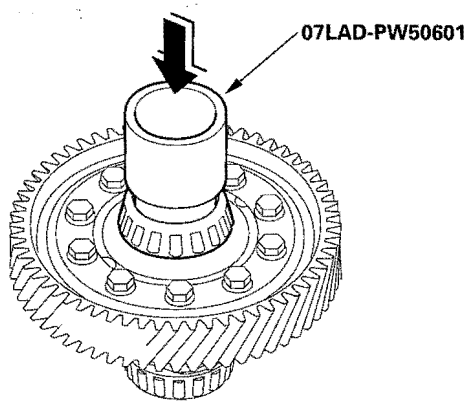

Protected by

Oil Seal Replacement

Special Tools Required
- Driver 07749-0010000
- Seal driver attachment 07GAD-PG40101 or 07GAD-PG40100
- Oil seal driver attachment 07JAD-PH80101

1. Remove the oil seal from the transmission housing.

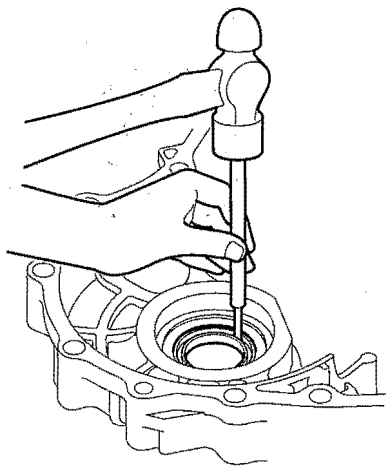

2. Remove the oil seal from the torque converter housing.

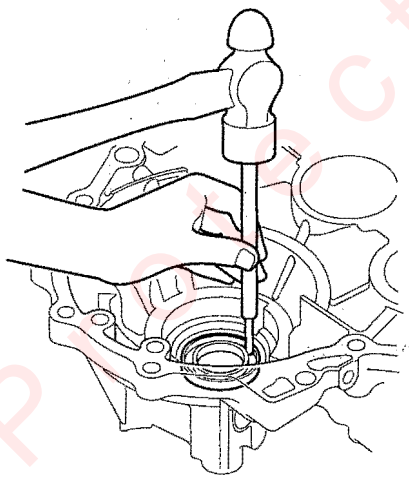

3. Install the new oil seal (A) in the transmission housing with the special tools.

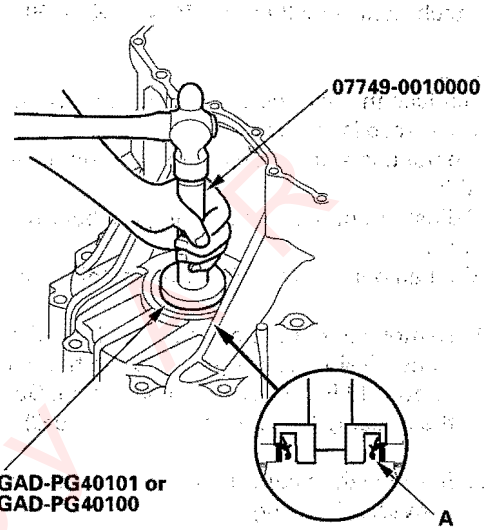

4. Install the oil seal (A) in the torque converter housing with the special tools.

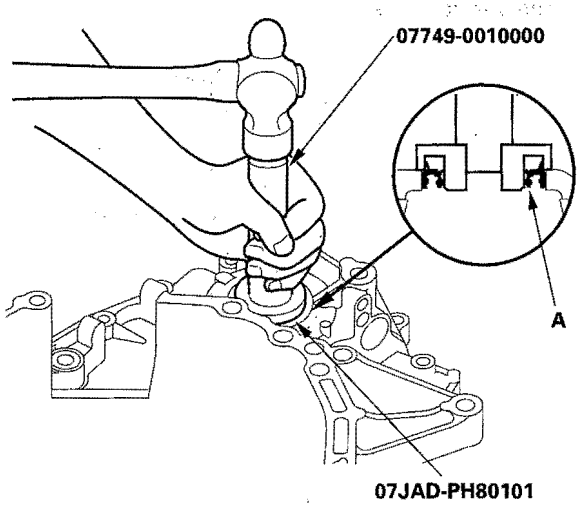

Protected by

Carrier Bearing Outer Race Replacement

Special Tools Required
- Driver 07749-0010000
- Attachment, 78 x 80 mm 07NAD-PX40100

NOTE:
- Replace the bearing with a new one whenever the outer race is replaced.
- Do not use shim(s) on the torque converter housing side.
- Adjust preload after replacing the bearing and outer race.
- Coat all parts with ATF during installation.

1. Remove the bearing outer race from the transmission housing by heating the housing to about 212°F (100°C) with a heat gun. Do not heat the housing to more than 212°F (100°C).

2. Remove the bearing outer race from the torque converter housing.

3. Install the thrust shim (A), thrust washer (B), and outer race (C) in the transmission housing (D) with the special tools.

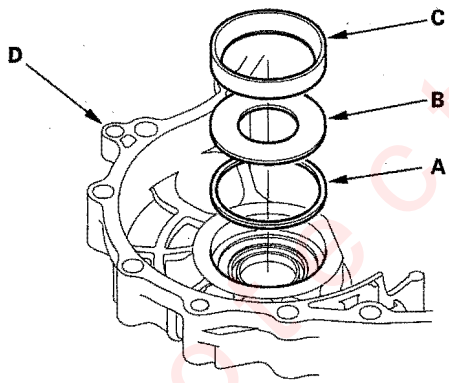

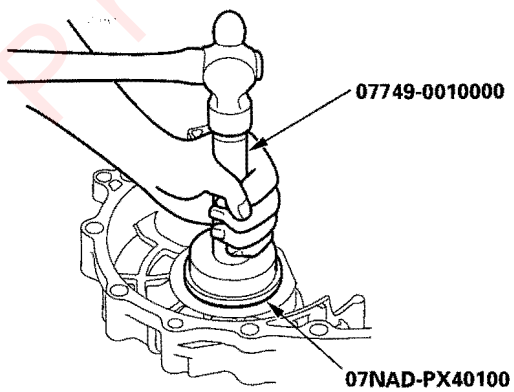

4. Install the thrust washer (A) and outer race (B) in the torque converter housing (C), and use the special tools to make sure the outer race bottoms out in the housing.

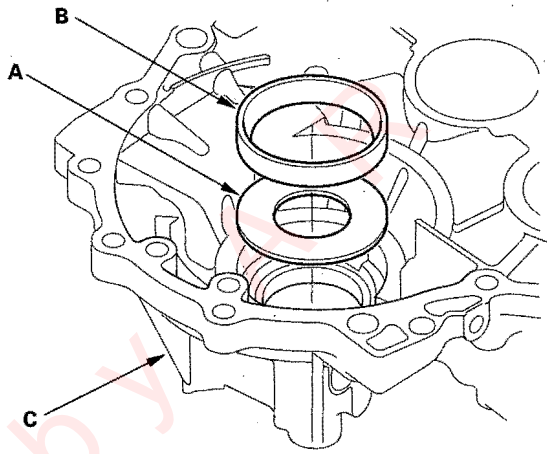

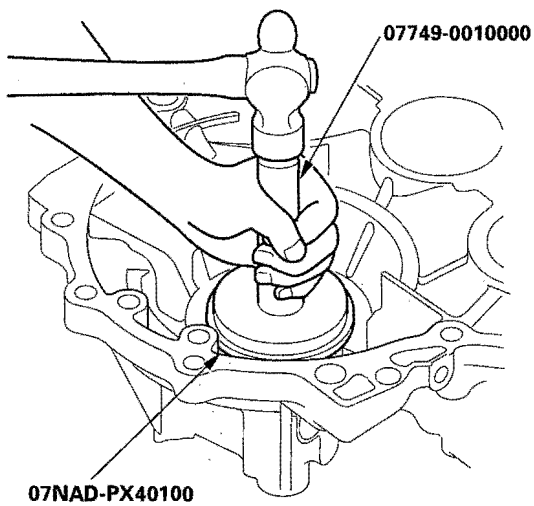

Projected by

Carrier Bearing Preload Inspection

Special Tools Required
- Driver 07749-0010000
- Attachment, 78 x 80 mm 07NAD-PX40100
- Preload inspection tool 07HAJ-PK40201

NOTE: If the transmission housing, torque converter housing, differential carrier, tapered roller bearing, outer race, or thrust shim were replaced, the bearing preload must be adjusted.

1. Remove the bearing outer race (A), thrust washer (B), and thrust shim (C) from the transmission housing (D) by heating the housing to about 212°F (100°C) with a heat gun (E). Do not heat the housing to more than of 212°F (100°C).

   NOTE: Let the transmission housing cool to room temperature before adjusting the bearing preload.

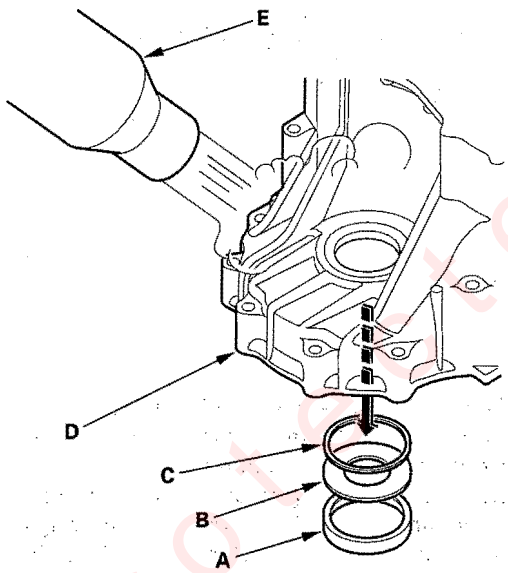

2. Replace the tapered roller bearing when the outer race is to be replaced.

3. Do not use a shim on the torque converter housing side.

4. Install the 81 mm thrust shim (A), thrust washer (B), and bearing outer race (C) in the transmission housing (D).
   If you replace the 81 mm thrust shim with a new one, use the same thickness shim as the old one.

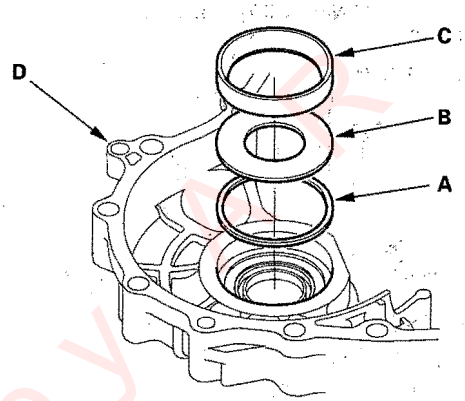

5. Drive in the outer race with the special tools.

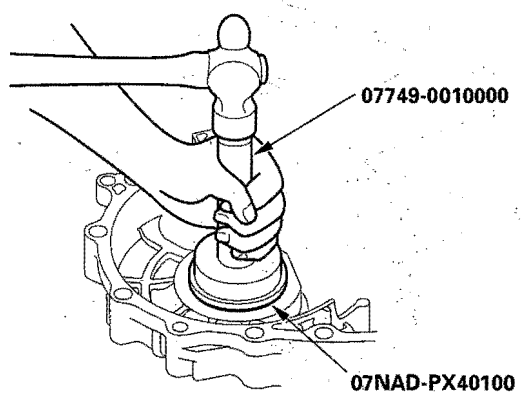

6. Check that there is no clearance between the thrust washer, outer race, shim, and transmission housing.

(cont'd)

Protected by ©

Carrier Bearing Preload Inspection (cont'd)

7. Install the differential assembly (A) in the torque converter housing (B), and install the gasket (C) and dowel pins (D) on the housing.

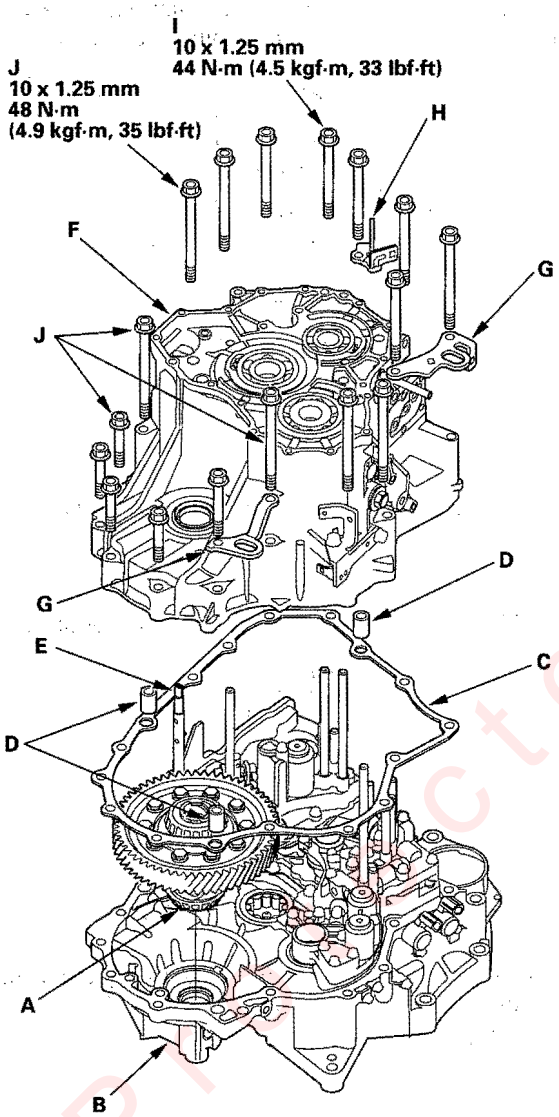

8. Align the spring pin on the control shaft (E) with the transmission housing groove.

9. Install the transmission housing (F), transmission hangers (G), and harness clamp bracket (H).

10. Tighten the 13 mounting bolts (J) to 44 N·m (4.5 kgf·m, 33 lbf·ft) in two or more steps in a crisscross pattern, and tighten the four bolts (K) to 48 N·m (4.9 kgf·m, 35 lbf·ft).

11. Rotate the differential assembly in both directions to seat the bearing.

12. Measure the starting torque of the differential assembly with the special tool, a torque wrench (A) and socket (B) at normal room temperature in both directions.

Standard:

New bearing	**2.9—4.1 N·m (30—42 kgf·cm, 26—37 lbf·in.)**
Reused bearings	**2.7—3.8 N·m (27—39 kgf·cm, 23—34 lbf·in.)**

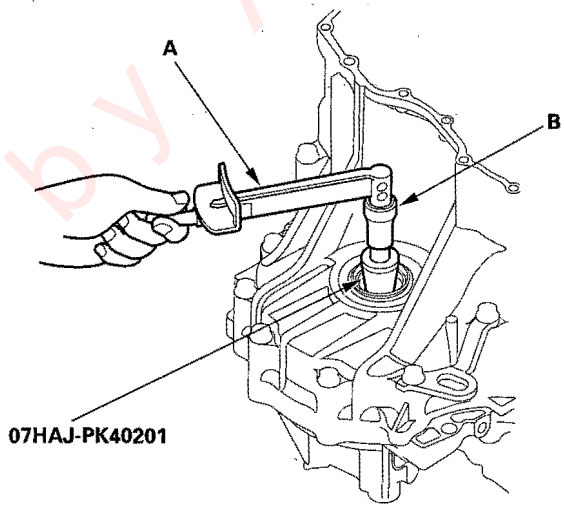

13. If the measurement is out of standard, remove the thrust shim and select the thrust shim from table. Install the new thrust shim and recheck. To increase the starting torque, increase the thickness of the thrust shim. To decrease the starting torque, decrease the thickness of the shim. Changing the shim to the next size will increase or decrease starting torque about 0.3—0.4 N·m (3—4 kgf·cm, 3—3 lbf·in.).

Protected by AR

THRUST SHIM, 81 mm

No.	Part Number	Thickness
A	41438-P7T-700	2.05 mm (0.081 in.)
AA	41438-PGH-000	2.075 mm (0.082 in.)
B	41439-P7T-700	2.10 mm (0.083 in.)
BB	41439-PGH-000	2.125 mm (0.084 in.)
C	41440-P7T-700	2.15 mm (0.085 in.)
CC	41440-PGH-000	2.175 mm (0.086 in.)
D	41441-P7T-000	2.20 mm (0.087 in.)
DD	41441-PGH-000	2.225 mm (0.088 in.)
E	41442-P7T-000	2.25 mm (0.089 in.)
EE	41442-PGH-000	2.275 mm (0.090 in.)
F	41443-P7T-000	2.30 mm (0.091 in.)
FF	41443-PGH-000	2.325 mm (0.092 in.)
G	41444-P7T-000	2.35 mm (0.093 in.)
GG	41444-PGH-000	2.375 mm (0.094 in.)
H	41445-P7T-000	2.40 mm (0.094 in.)
HH	41445-PGH-000	2.425 mm (0.095 in.)
I	41446-P7T-000	2.45 mm (0.096 in.)
II	41446-PGH-000	2.475 mm (0.097 in.)
J	41447-P7T-000	2.50 mm (0.098 in.)
JJ	41447-PGH-000	2.525 mm (0.099 in.)
K	41448-P7T-000	2.55 mm (0.100 in.)
KK	41448-PGH-000	2.575 mm (0.101 in.)
L	41449-P7T-000	2.60 mm (0.102 in.)
LL	41449-PGH-000	2.625 mm (0.103 in.)
M	41450-P7T-000	2.65 mm (0.104 in.)
MM	41450-PGH-000	2.675 mm (0.105 in.)
N	41451-P7T-000	2.70 mm (0.106 in.)
NN	41451-PGH-000	2.725 mm (0.107 in.)
O	41452-P7T-000	2.75 mm (0.108 in.)
OO	41452-PGH-000	2.775 mm (0.109 in.)
P	41453-P7T-000	2.80 mm (0.110 in.)
PP	41453-PGH-000	2.825 mm (0.111 in.)
Q	41454-P7T-000	2.85 mm (0.112 in.)
QQ	41454-PGH-000	2.875 mm (0.113 in.)
R	41455-P7T-000	2.90 mm (0.114 in.)
RR	41455-PGH-000	2.925 mm (0.115 in.)
S	41456-P7T-000	2.95 mm (0.116 in.)
SS	41456-PGH-000	2.975 mm (0.117 in.)
T	41457-P7T-000	3.00 mm (0.118 in.)
TT	41457-PGH-000	3.025 mm (0.119 in.)
U	41458-P7T-000	3.05 mm (0.120 in.)

Scanned by A R

Driveline/Axle

Special Tools 16-2
Component Location Index 16-3
Driveshaft Inspection 16-4
Driveshaft Removal 16-4
Driveshaft Disassembly 16-6
Dynamic Damper Replacement 16-10
Driveshaft Reassembly 16-11
Driveshaft Installation 16-18
Intermediate Shaft Removal 16-21
Intermediate Shaft Disassembly 16-22
Intermediate Shaft Reassembly 16-24
Intermediate Shaft Installation 16-29

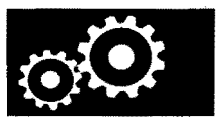

Protected by A R

Special Tools

Ref. No.	Tool Number	Description	Qty
①	07AAF-SEPA100	Ball Joint Remover	1
②	07AAF-SEPA200	Ball Joint Thread Protector	1
③	07GAD-PH70201	Oil Seal Driver	1
④	07KAF-PS30200	Bearing Separator	1
⑤	07NAF-SR30101	Half Shaft Base	1
⑥	07XAC-001020A	Threaded Adapter, 24 x 1.5 mm	1
⑦	07746-0010400	Attachment, 52 x 55 mm	1
⑧	07746-0030400	Attachment, 35 mm I.D.	1
⑨	07749-0010000	Driver	1
⑩	07947-SB00100	Oil Seal Driver	1

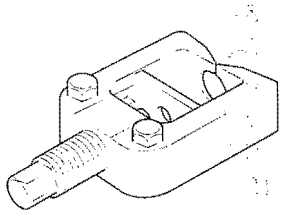
①

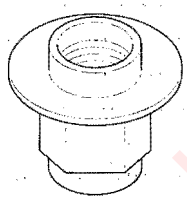
②

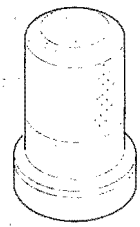
③

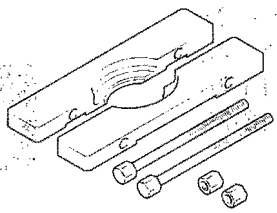
④

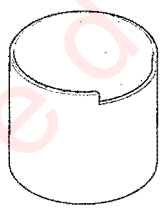
⑤

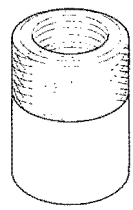
⑥

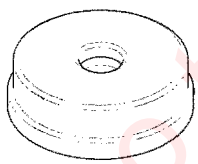
⑦

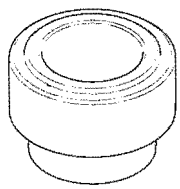
⑧

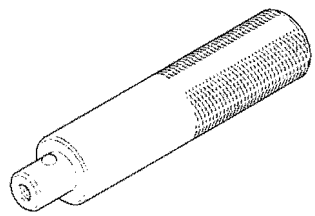
⑨

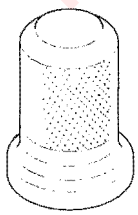
⑩

Protected by AR

Component Location Index

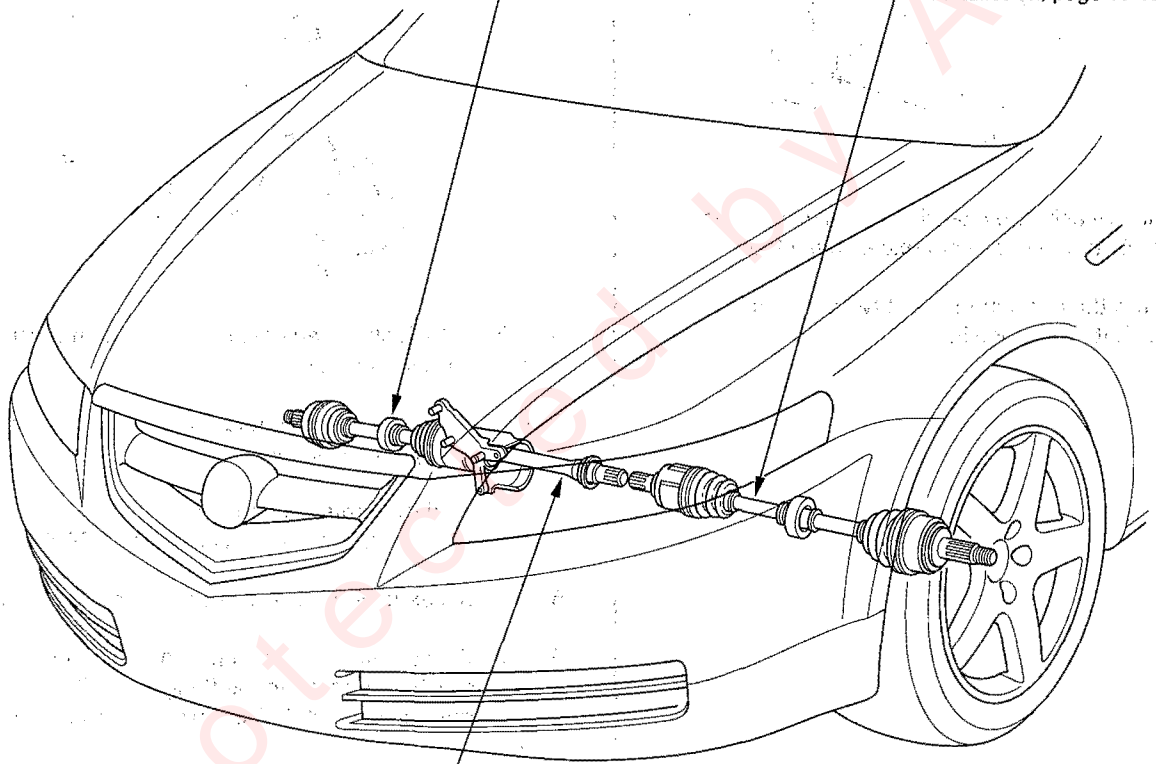

Protected by AP

Driveshaft Inspection

1. Check the inboard boot (A) and the outboard boot (B) on the driveshaft (C) for cracks, damage, leaking grease, and loose boot bands (D). If any damage is found, replace the boot and boot bands.

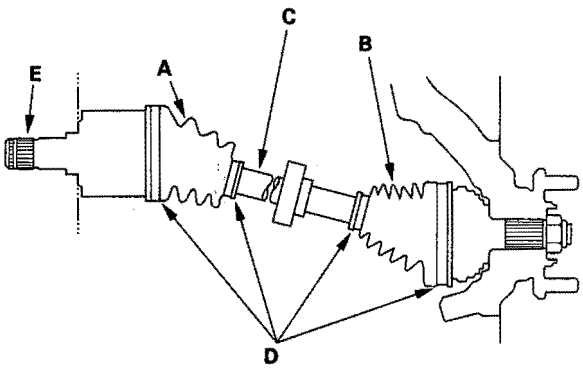

2. Turn the driveshaft by hand, and make sure the splines (E) and joint are not excessively loose.

3. Make sure the driveshaft is not twisted, bent, or cracked; if it is, replace it.

Driveshaft Removal

Special Tools Required
- Ball joint remover 07AAF-SEPA100
- Ball joint thread protector 07AAF-SEPA200

1. Raise the front of the vehicle, and support it with safety stands in the proper locations (see page 1-7).

2. Remove the wheel nuts and front wheels.

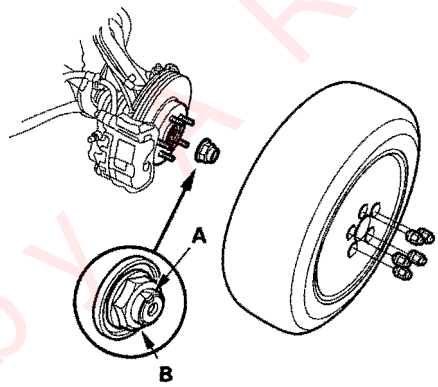

3. Lift up the locking tab (A) on the spindle nut (B), then remove the nut.

4. Drain the transmission fluid, then reinstall the drain plug using a new washer:

   - Manual transmission (see page 13-10).
   - Automatic transmission (see page 14-200).

5. Remove exhaust pipe A (see step 44 on page 5-7).

6. Hold the stabilizer ball joint pin (A) with a hex wrench (B), and remove the flange nut (C). Separate the front stabilizer link (D) from the lower arm.

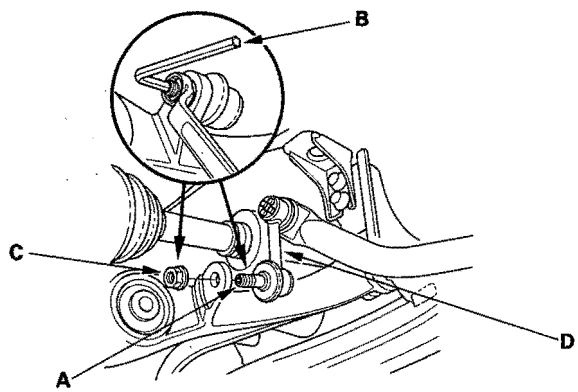

Protected by AR

7. Remove the self-locking nut (A), 12 mm flange bolt (B), and 10 mm flange bolt (C), then remove the damper fork (D).

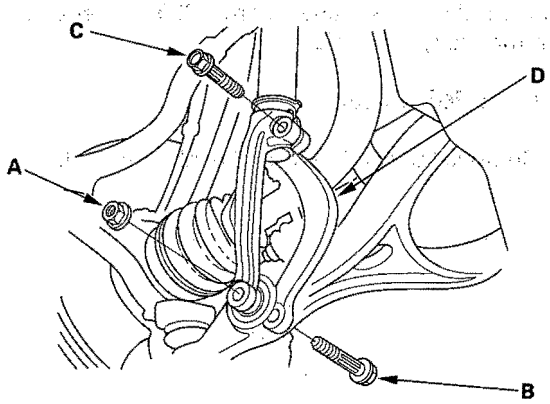

8. Remove the cotter pin (A) from the lower arm ball joint, and remove the nut (B).

NOTE:
- To avoid damaging the ball joint, install the special tools on the threads of the ball joint.
- Be careful not to damage the ball joint boot when installing the remover.
- Do not force or hammer on the lower arm, or pry between the lower arm and the knuckle. You could damage the ball joint.

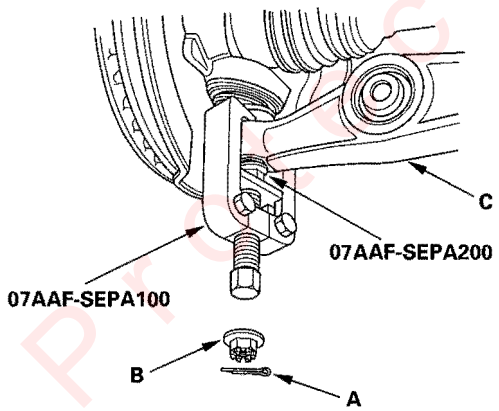

9. Disconnect the lower ball joint from the lower arm using the special tools (see step 1 on page 18-10).

NOTE: The collar on the lower arm is removed with ball joint, the lower arm must be replaced (see page 18-20).

10. Pull the knuckle outward, and remove the outboard joint from the front wheel hub using a plastic hammer.

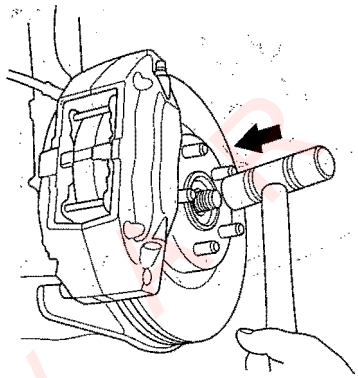

11. Left driveshaft: Pry the inboard joint (A) from the differential case with a prybar. Right driveshaft: Drive the inboard joint (A) off of the intermediate shaft with a drift and hammer. Remove the driveshaft as an assembly. Do not pull on the driveshaft (B), because the inboard joint may come apart. Pull the driveshaft straight out to avoid damaging the oil seal.

Left driveshaft

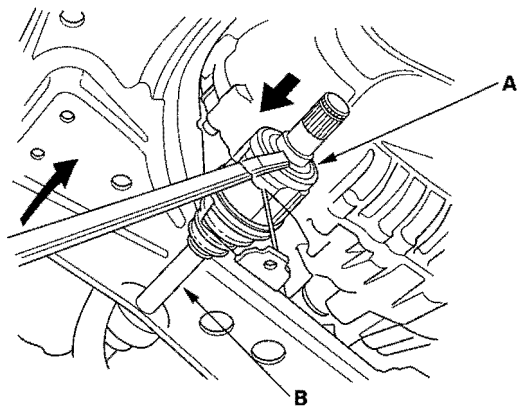

(cont'd)

Driveshaft Removal (cont'd)

Right driveshaft

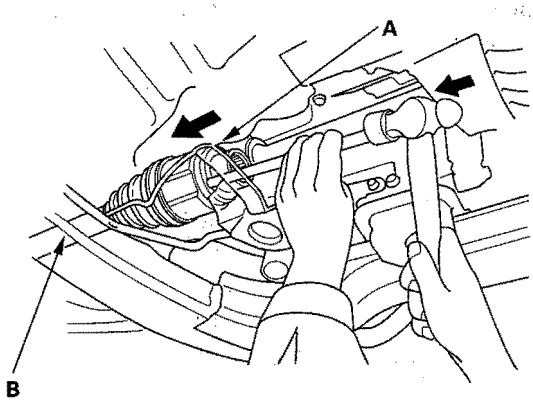

Driveshaft Disassembly

Special Tools Required
- Threaded adapter, 24 x 1.5 mm 07XAC-001020A
- Sliding hammer set, commercially available
- Boot band pincers, Kent-Moore J-35910 or equivalent, commercially available

Inboard Joint Side

1. Remove the set ring from the inboard joint.

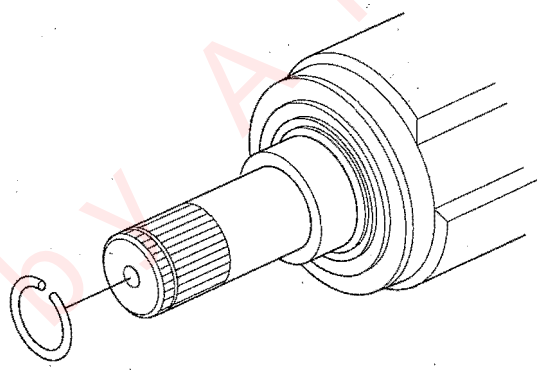

Protected by AR

2. Remove the boot bands. Be careful not to damage the boot and dynamic damper.

   - If the boot band is a welded type (A), cut the boot band (B).
   - If the boot band is a double loop type (C), lift up the band end (D), then push it into the clip (E).
   - If the boot band is a low profile type (F), pinch the boot band using commercially available boot band pincers (G).

Welded Type

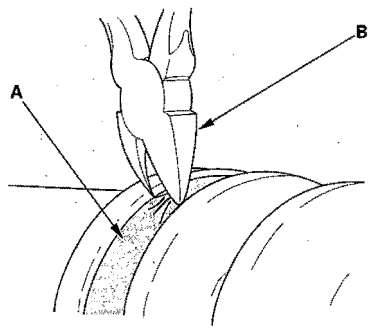

Double Loop Type

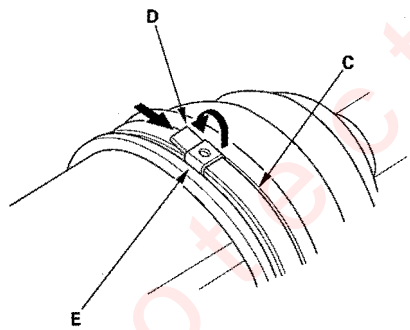

Low Profile Type

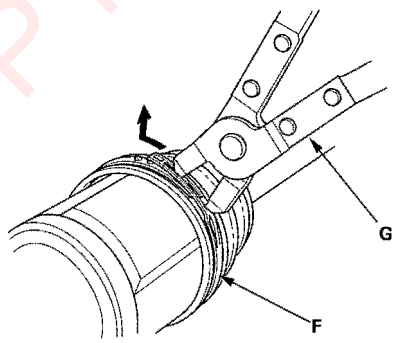

3. Make a mark (A) on each roller (B) and inboard joint (C) to identify the locations of rollers and grooves in the inboard joint. Then remove the inboard joint on the shop towel (D). Be careful not to drop the rollers when separating them from the inboard joint.

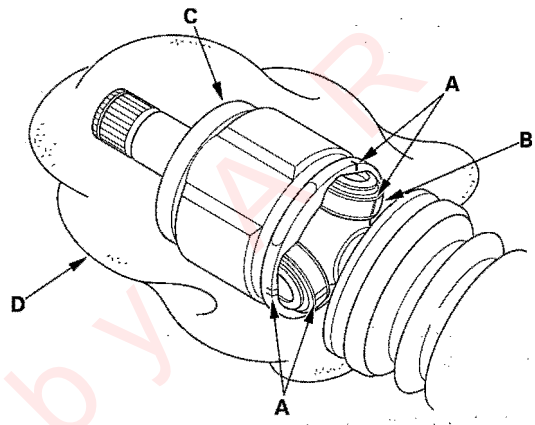

4. Make a mark (A) on the rollers (B) and spider (C) to identify the locations of the rollers on the spider, then remove the rollers.

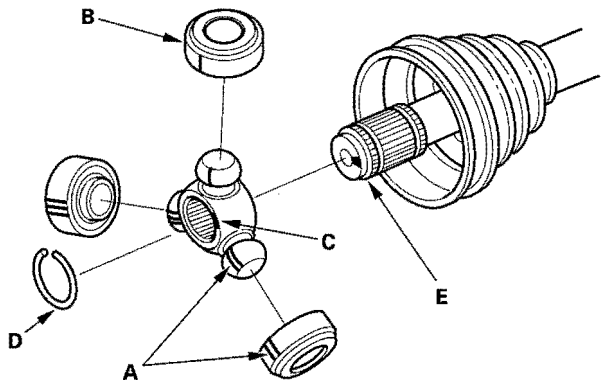

5. Remove the circlip (D).

6. Mark the spider (C) and driveshaft (E) to identify the position of the spider on the shaft.

7. Remove the spider (C).

(cont'd)

Protected by AR

Driveshaft Disassembly (cont'd)

8. Wrap the splines on the driveshaft with vinyl tape (A) to prevent damage to the boot.

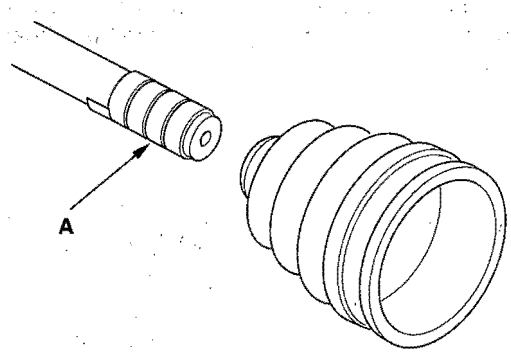

9. Remove the inboard boot. Be careful not to damage the boot.
10. Remove the vinyl tape.

Outboard Joint Side

1. Remove the boot bands. Be careful not to damage the boot and dynamic damper.

   If the boot band is an ear clamp type (A), lift up the three tabs (B) with a screwdriver.

Ear Clamp Type

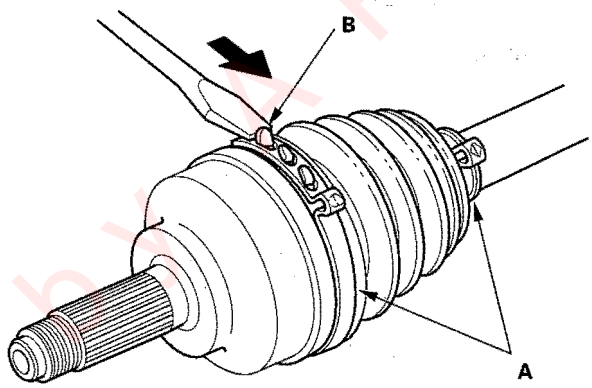

2. Slide the outboard boot (A) partially to the inboard joint side. Be careful not to damage the boot.

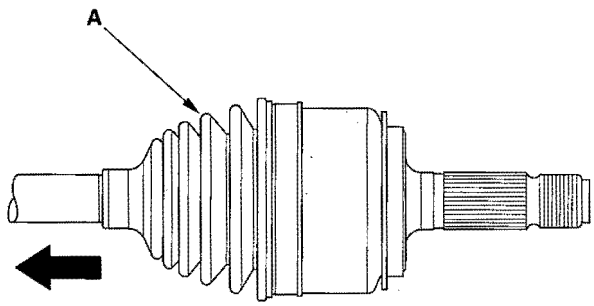

Protected by AR

3. Wipe off the grease to expose the driveshaft and the outboard joint inner race.

4. Make a mark (A) on the driveshaft (B) at the same position of the outboard joint end (C).

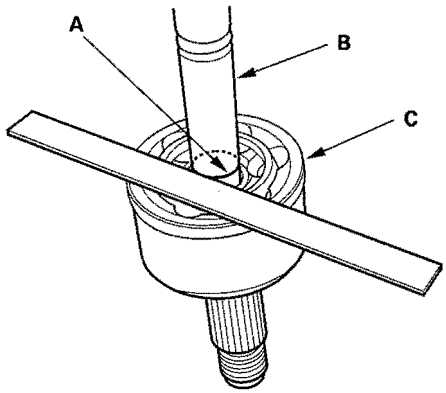

5. Carefully clamp the driveshaft in a vise.

6. Remove the outboard joint (A) using the special tool and a commercially available 5/8" slide hammer (B).

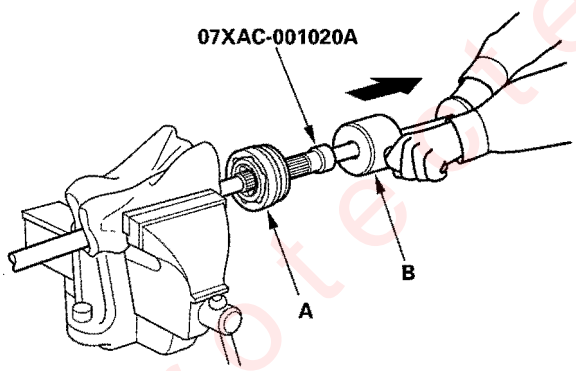

7. Remove the driveshaft from the vise.

8. Remove the stop ring from the driveshaft.

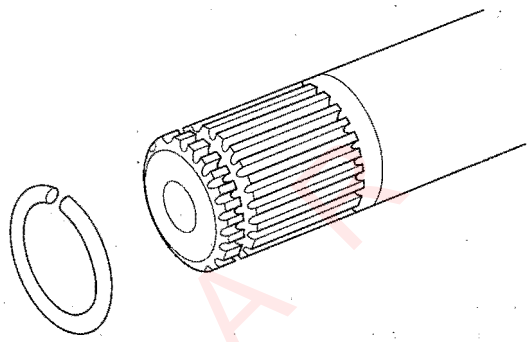

9. Wrap the splines on the driveshaft with vinyl tape (A) to prevent damage to the boot.

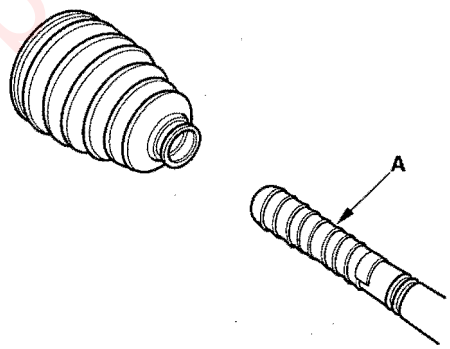

10. Remove the outboard boot. Be careful not to damage the boot.

11. Remove the vinyl tape.

Protected by A

Dynamic Damper Replacement

1. Remove the inboard joint (see page 16-6).

2. Remove the dynamic damper bands. Be careful not to damage the dynamic damper (see step 2 on page 16-7).

   - If the band is a welded type, cut the band.
   - If the band is a double loop type, lift up the band end, then push it into the clip.
   - If the band is a low profile type, pinch the band using commercially available boot band pincers.

3. Wrap the splines on the driveshaft with vinyl tape (A) to prevent damage to the dynamic damper.

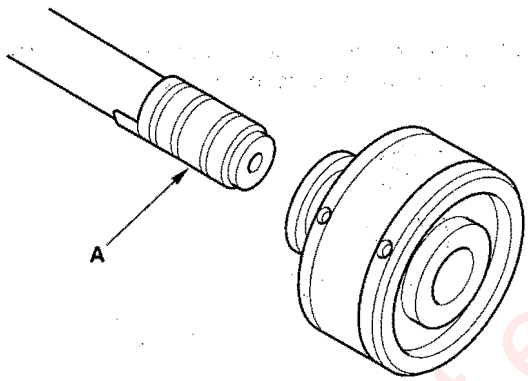

4. Remove the dynamic damper. Be careful not to damage the dynamic damper.

5. Install the new dynamic damper to the specifications below.

Left driveshaft: 270—274 mm (10.63—10.79 in.)
Right driveshaft: 283—287 mm (11.14—11.30 in.)

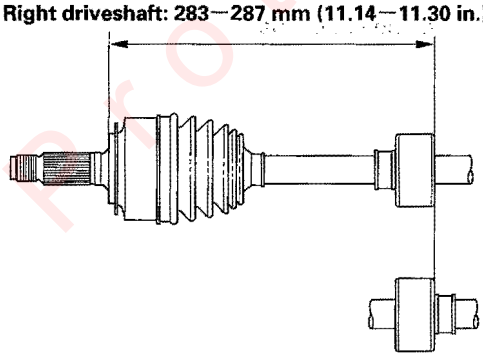

6. Install the dynamic damper band (see step 9 on page 16-13).

7. Install the inboard joint (see step 1 on page 16-12).

Protected by AR

Driveshaft Reassembly

Exploded View

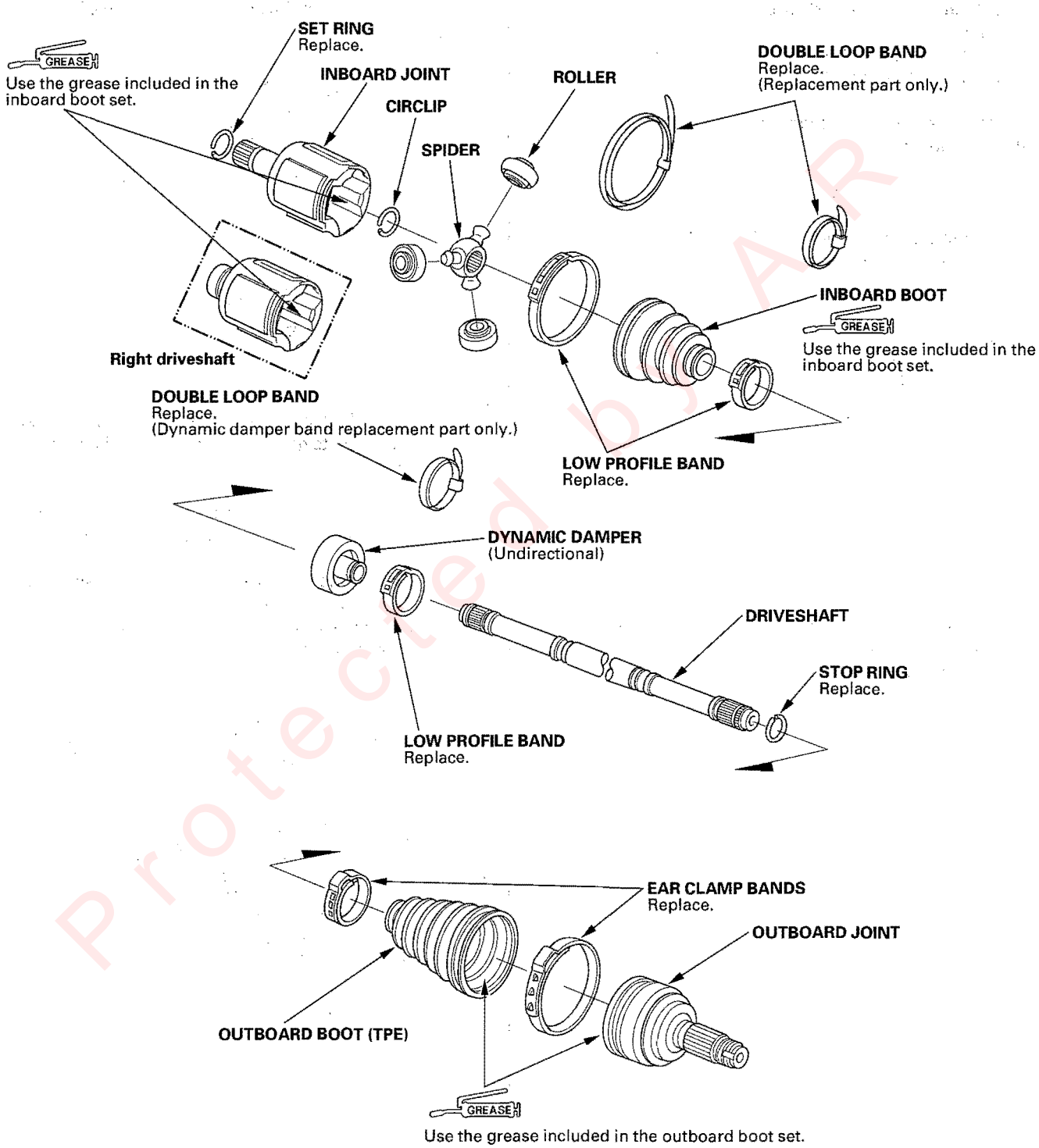

Protected by AR

(cont'd)

Driveshaft Reassembly (cont'd)

Special Tools Required
- Boot band tool, KD-3191 or equivalent, commercially available
- Boot band pincers, Kent-Moore J-35910 or equivalent, commercially available

NOTE: Refer to the Exploded View as needed during this procedure.

Inboard Joint Side

1. Wrap the splines with vinyl tape (A) to prevent damage to the inboard boot.

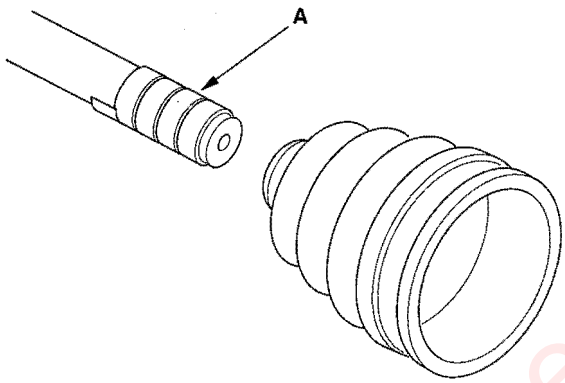

2. Install the inboard boot onto the driveshaft, then remove the vinyl tape. Be careful not to damage the inboard boot.

3. Install the spider (A) onto the driveshaft by aligning the marks (B) on the spider and the end of the driveshaft.

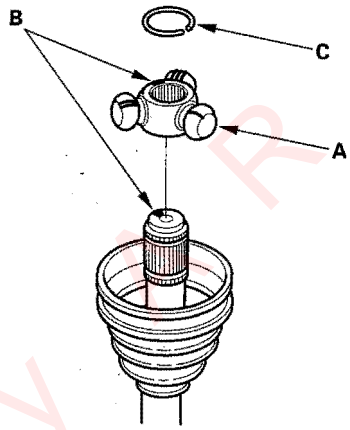

4. Fit the circlip (C) into the driveshaft groove. Rotate the circlip in its groove to make sure it is fully seated.

5. Fit the rollers (A) onto the spider (B) with their high shoulders facing outward, and note these items:
   - Reinstall the rollers in their original positions on the spider by aligning the marks (C).
   - Hold the driveshaft pointed up to prevent the rollers from falling off.

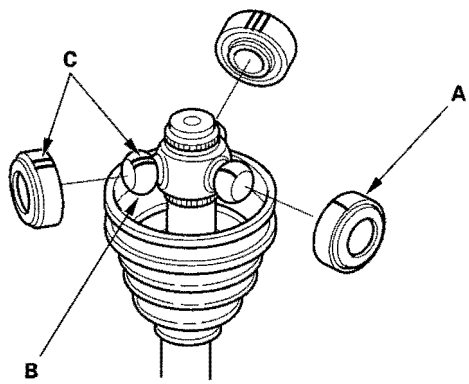

Protected by MR

6. Pack the inboard joint with the joint grease included in the new driveshaft set.

Grease quantity
Inboard joint: 150—160 g (5.3—5.6 oz)



7. Fit the inboard joint onto the driveshaft, and note these items:

- Reinstall the inboard joint onto the driveshaft by aligning the marks (A) on the inboard joint and the rollers.
- Hold the driveshaft so the inboard joint is pointing up to prevent it from falling off.

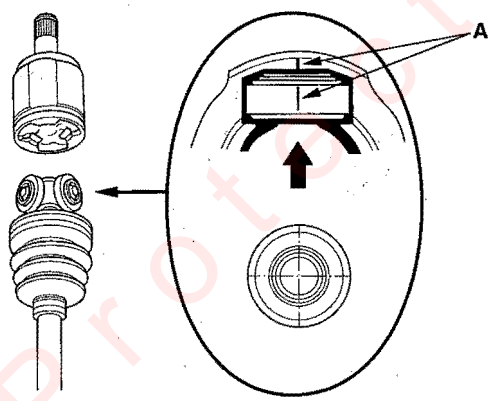

8. Adjust the inboard joint so the rollers are in the middle of the joint, then check the driveshaft length measurement to those shown in the figure.

Right driveshaft: 512—517 mm (20.16—20.35 in.)

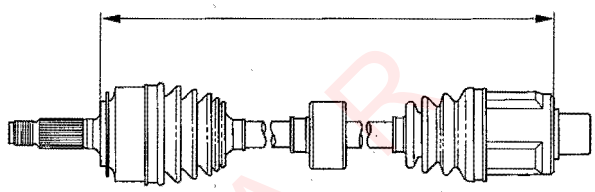

Left driveshaft: 554—559 mm (21.81—22.01 in.)

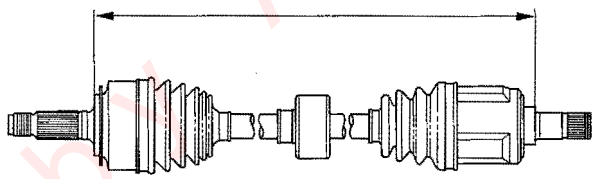

9. Install the boot bands.

- For the double loop type, go to step 13. (Boot band replacement only)
- For the low profile type, go to step 10.

10. Install the new low profile band (A) onto the boot (B), then hook the tab (C) of the band.

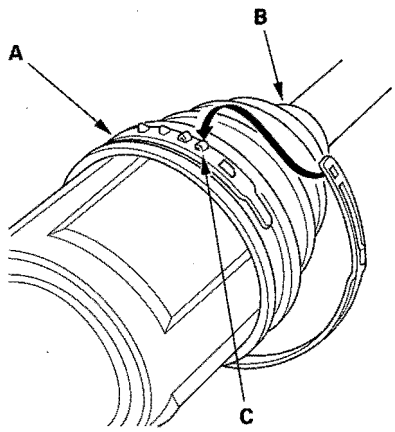

(cont'd)

Protected by AR

Driveshaft Reassembly (cont'd)

11. Close the hook portion of the band with a commercially available boot band pincers (A), then hook the tabs (B) of the band.

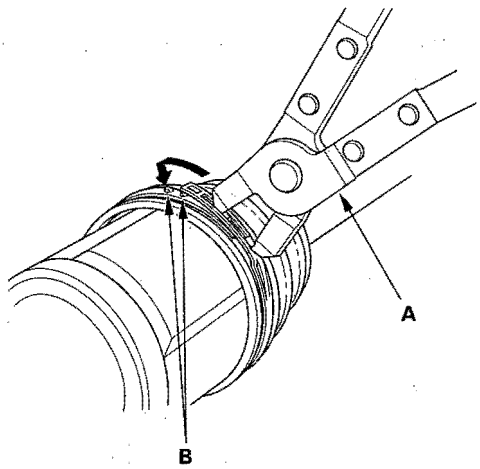

12. Install the boot band on the other end of the boot, and repeat steps 10 through 11, then go to step 22.

13. Fit the boot ends onto the driveshaft and the inboard joint, then install the new double loop band (A) onto the boot.

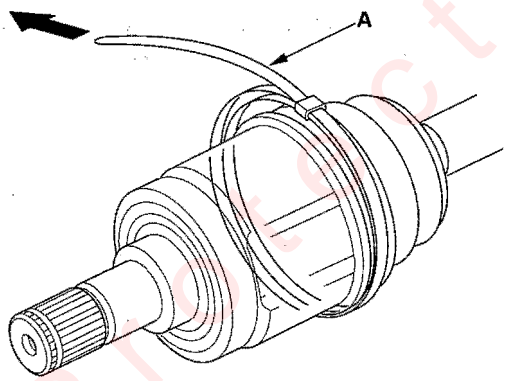

14. Pull up the slack in the band by hand.

15. Mark a position (A) on the band 10—14 mm (0.4—0.6 in.) from the clip (B).

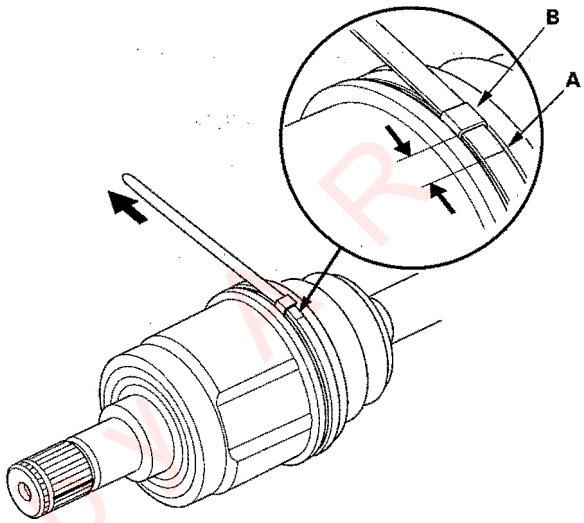

16. Thread the free end of the band through the nose section of a commercially available boot band tool KD-3191 or equivalent (A), and into the slot on the winding mandrel (B).

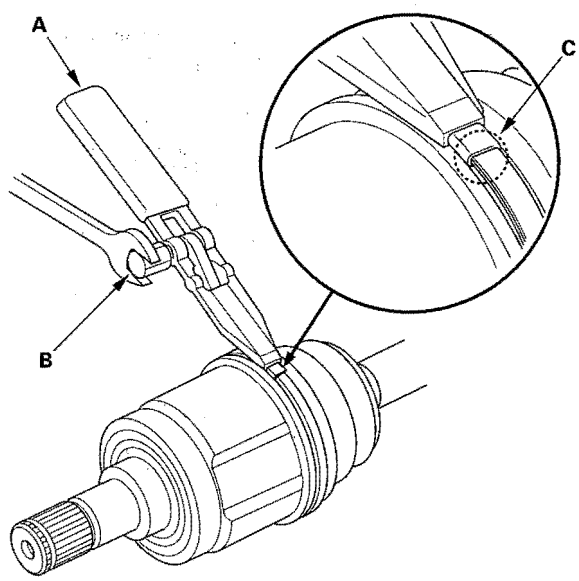

17. Place a wrench on the winding mandrel of the boot band tool, and tighten the band until the marked spot (C) on the band meets the edge of the clip.

Protected by AR

18. Lift up the boot band tool to bend the free end of the band 90 degrees to the clip. Center-punch the clip, then fold over the remaining tail onto the clip.

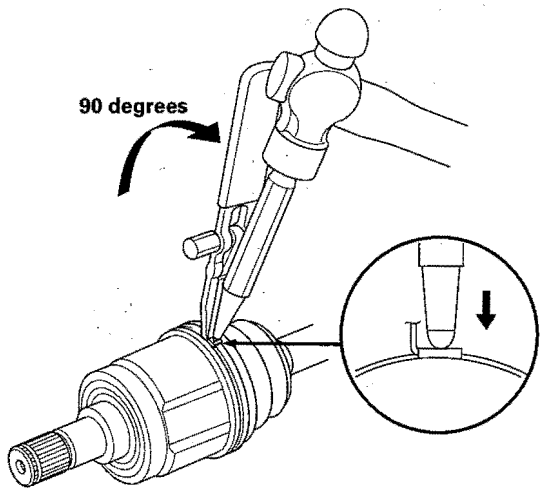

19. Unwind the boot band tool, and cut off the excess free end of the band to leave a 5—10 mm (0.2—0.4 in.) tail protruding from the clip.

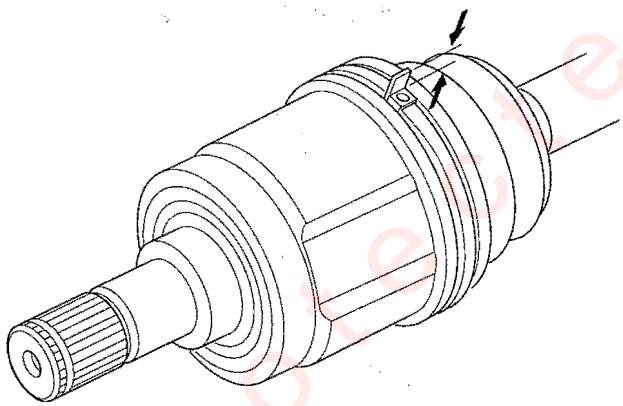

20. Bend the band end (A) by tapping it down with a hammer.

NOTE:
- Make sure the band and clip do not interfere with anything on the vehicle and the band does not move.
- Remove any grease remaining on the surrounding surfaces

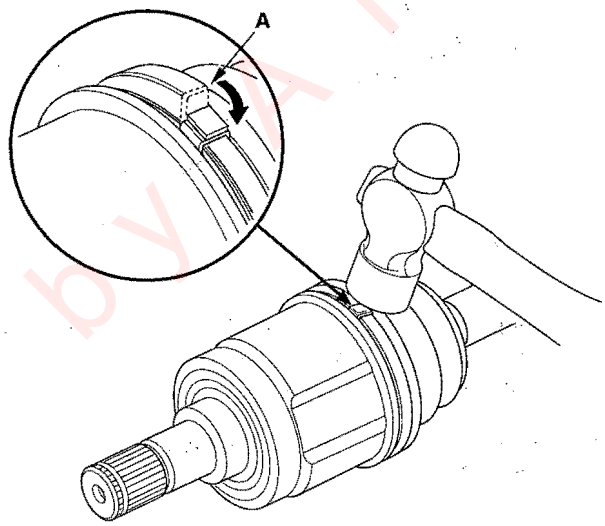

21. Repeat steps 13 through 20 for the band on the other end of the boot, then go to step 22.

22. Install the new set ring.

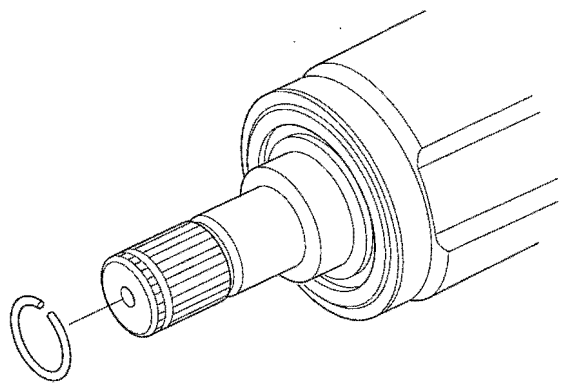

Protected by A R

(cont'd)

Driveshaft Reassembly (cont'd)

Outboard Joint Side

1. Wrap the splines with vinyl tape (A) to prevent damage to the outboard boot.

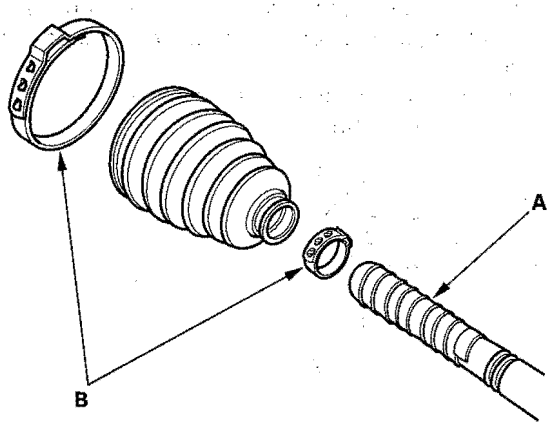

2. Install new ear clamp bands (B) and outboard boot, then remove the vinyl tape. Be careful not to damage the outboard boot.

3. Install the new stop ring in the driveshaft groove (A).

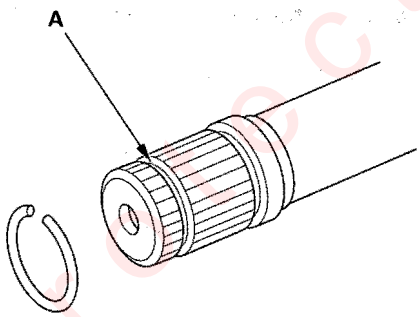

4. Insert the driveshaft (A) into the outboard joint (B) until the stop ring (C) is closed.

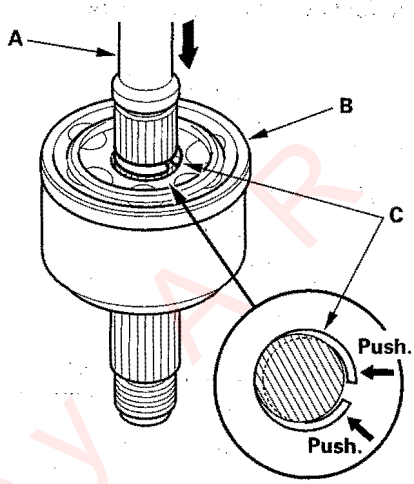

5. To completely seat the outboard joint, pick up the driveshaft and joint, and tap them on a hard surface. Do not use a hammer as excessive force may damage the driveshaft. Be careful not to damage the threaded section (A) of the outboard joint.

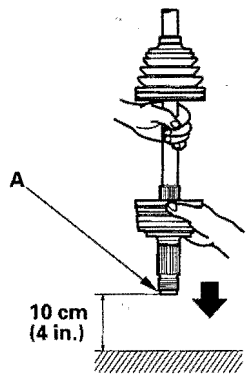

Protected by ARR

6. Check the alignment of the paint mark (A) with the outboard joint end (B).

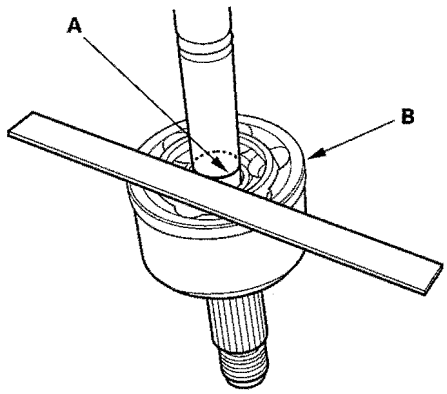

7. Pack the outboard joint (A) with the joint grease included in the new joint boot set.

Grease quantity
Outboard joint: 140—150 g (4.9—5.3 oz)

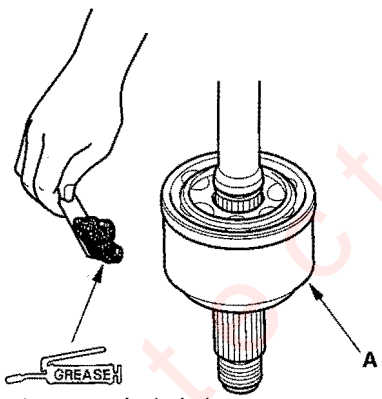

Use the grease included in the outboard boot set.

8. Adjust the length of the driveshafts to those shown in the figure, then adjust the boots to halfway between full compression and full extension. Make sure the ends of the boots seat in the groove of the driveshaft and joint.

Right driveshaft: 512—517 mm (20.16—20.35 in.)

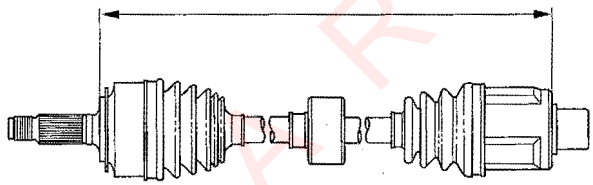

Left driveshaft: 554—559 mm (21.81—22.01 in.)

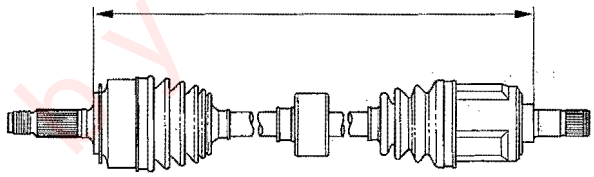

9. Fit the boot (A) ends onto the driveshaft (B) and outboard joint (C).

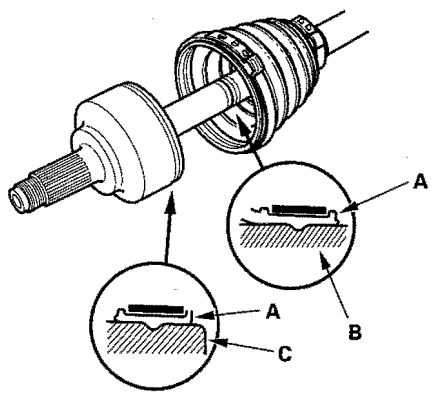

(cont'd)

Protected by A R

Driveshaft Reassembly (cont'd)

10. Close the ear portion (A) of the band with commercially available boot band pincers Kent-Moore J-35910 or equivalent (B).

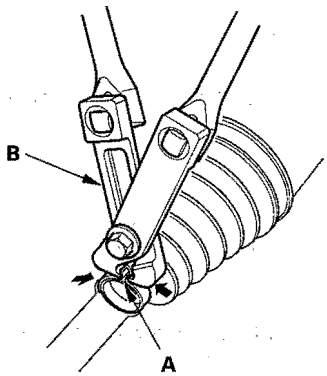

11. Check the clearance between the closed ear portion of the band. If the clearance is not within the standard, close the ear portion of the band farther.

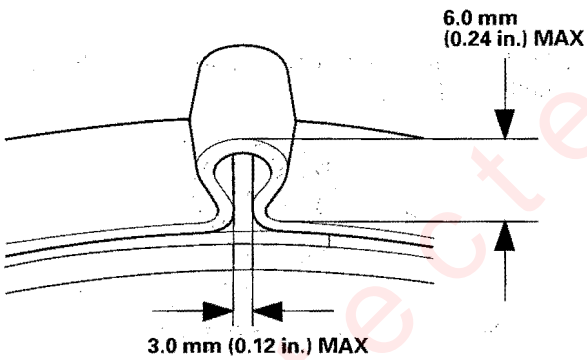

12. Repeat steps 10 and 11 for the band on the other end of the boot.

Driveshaft Installation

1. Install a new set ring in the set ring groove of the left driveshaft.

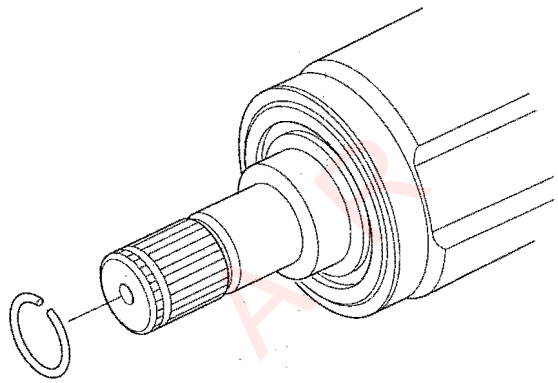

2. Apply 0.5—1.0 g (0.02—0.04 oz) of grease to the whole splined surface (A) of the right driveshaft. After applying grease, remove the grease from the splined grooves at intervals of 2—3 splines and from the set ring groove (B) so that air can bleed from the intermediate shaft.

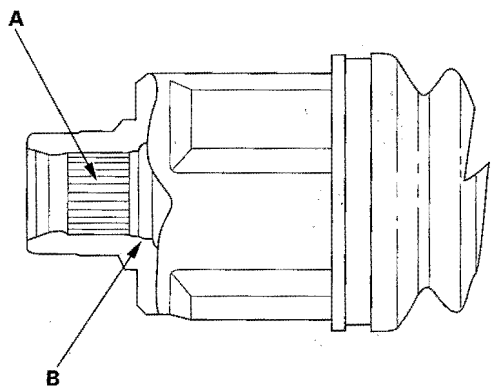

Protected by AR

3. Clean the areas where the driveshaft contacts the differential thoroughly with solvent or brake cleaner, and dry with compressed air. Insert the inboard end (A) of the driveshaft into the differential (B) or intermediate shaft (C) until the new set ring (D) locks in the groove (E).

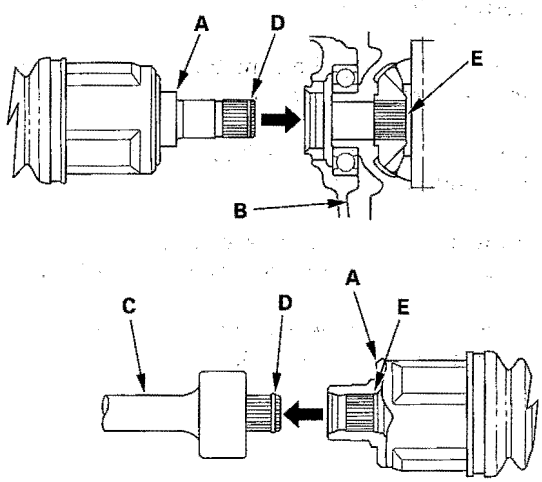

4. Install the outboard joint (A) into the front hub (B).

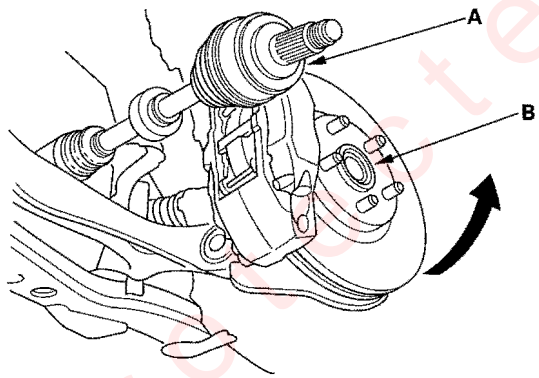

5. Clean off any grease contamination from the ball joint tapered section and threads, then install the knuckle (A) onto the lower arm (B). Torque the new castle nut (C) to the lower torque specification, then tighten it only far enough to align the slot with the ball joint pin hole. Do not align the nut by loosening it.

NOTE: Make sure the ball joint boot is not damaged or cracked.

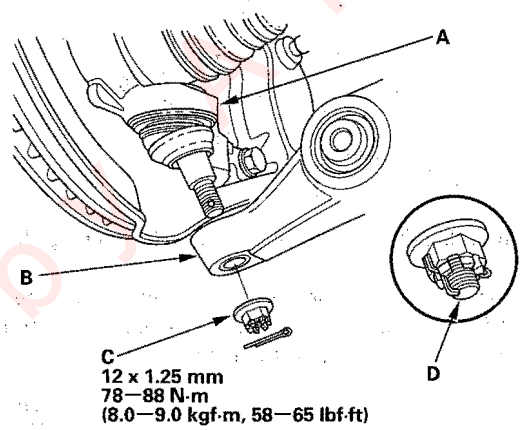

6. Install the new cotter pin (D) into the ball joint pin hole, and bend the cotter pin as shown.

7. Install the damper fork (A) over the driveshaft and onto the lower arm. Install the damper in the damper fork so the aligning tab (B) is aligned with the slot in the damper fork. Loosely install the flange bolt (C).

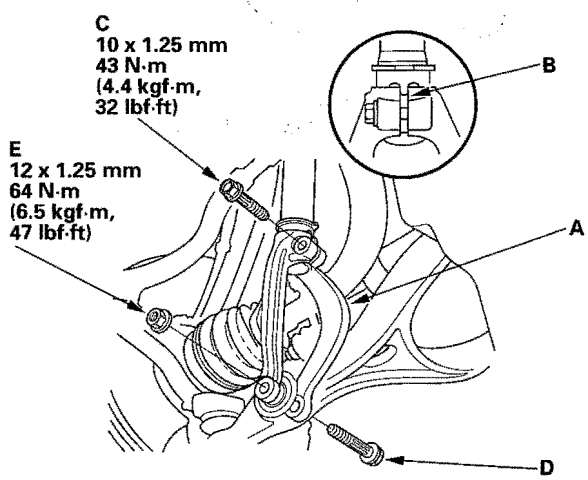

8. Loosely install the flange bolt (D) and a new self-locking nut (E).

(cont'd)

Protected by R

Driveshaft Installation (cont'd)

9. Connect the front stabilizer link (A) to the lower arm. Hold the stabilizer link ball joint pin (B) with a hex wrench (C), and tighten the new flange nut (D).

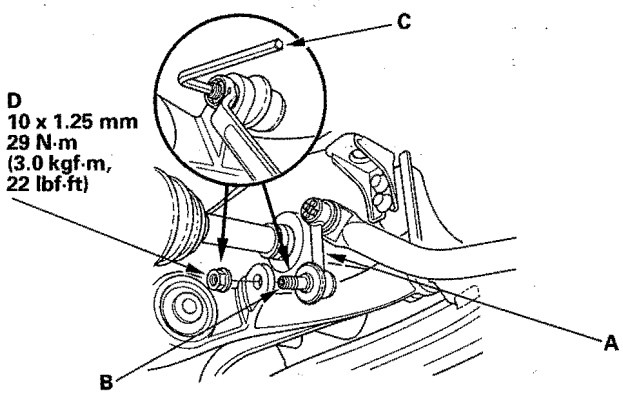

10. Install exhaust pipe A (see step 23 on page 5-17).

11. Install a new spindle nut (A), then tighten the nut. After tightening, use a drift to stake the spindle nut shoulder (B) against the driveshaft.

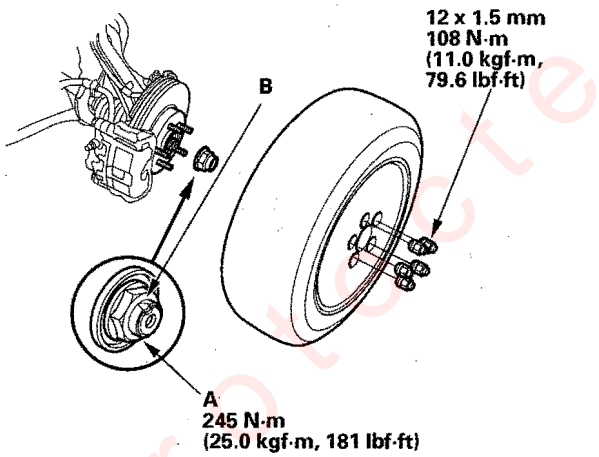

12. Clean the mating surfaces of the brake disc and the front wheel, then install the front wheel with the wheel nuts.

13. Turn the front wheel by hand, and make sure there is no interference between the driveshaft and surrounding parts.

14. Tighten the flange bolt and the self-locking nut with the vehicle's weight on the damper.

15. Refill the transmission with recommended transmission fluid:

    - Manual transmission (see page 13-10).
    - Automatic transmission (see page 14-204).

16. Check the front wheel alignment, and adjust it if necessary (see page 18-5).

Protected by AP

Intermediate Shaft Removal

1. Drain the transmission fluid, then reinstall the drain plug using a new washer:
   - Manual transmission (see page 13-10).
   - Automatic transmission (see page 14-204).
2. Remove the right driveshaft (see page 16-4).
3. Remove exhaust pipe A (see step 44 on page 5-7).
4. Remove the exhaust pipe bracket (A) and heat shield (B).

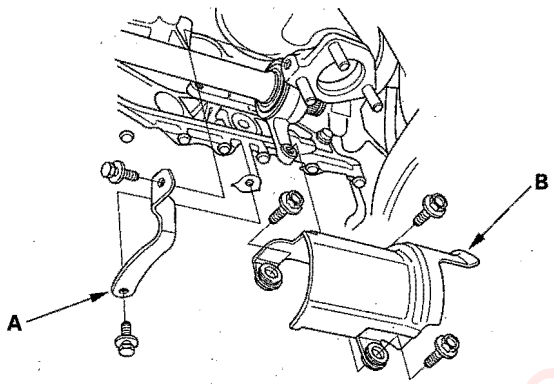

5. Remove the flange bolt (A) and two dowel bolts (B).

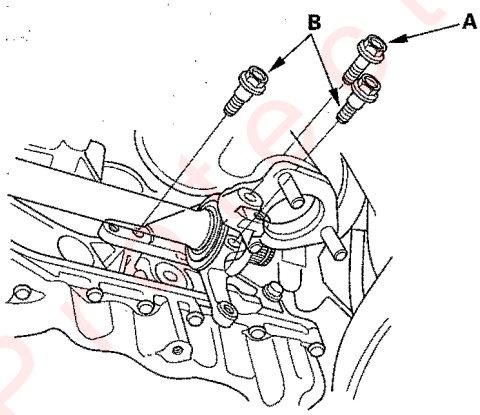

6. Remove the intermediate shaft (A) from the differential. Hold the intermediate shaft horizontal until it is clear of the differential to prevent damage to the differential oil seal (B).

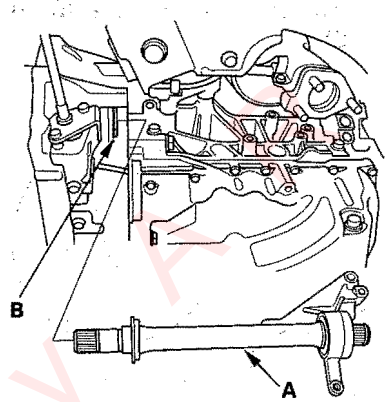

Protected by A

Intermediate Shaft Disassembly

Special Tools Required
- Oil seal driver 07947-SB00100
- Half shaft base 07NAF-SR30101

1. Remove the set ring (A), outer seal (B), and external snap ring (C).

M/T model:

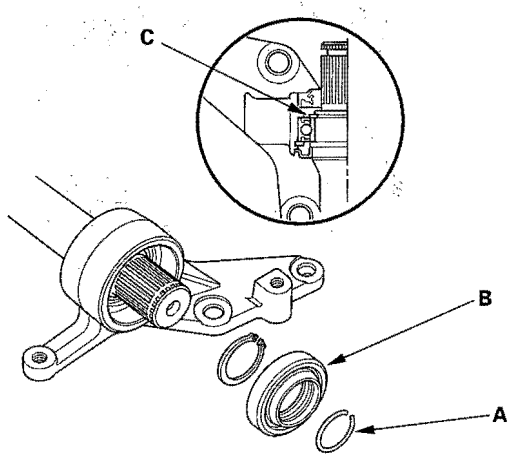

A/T model:

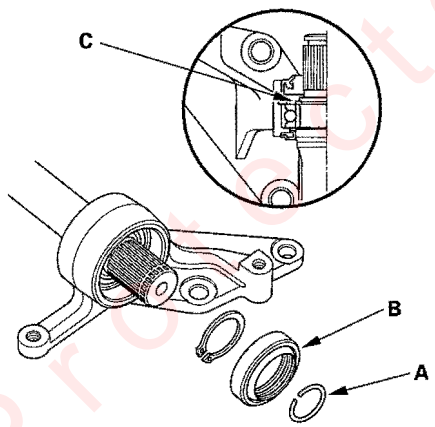

2. Press the intermediate shaft (A) out of the intermediate shaft bearing (B) using a press. Be careful not to damage the metal rings (C) on the intermediate shaft during disassembly.

M/T model:

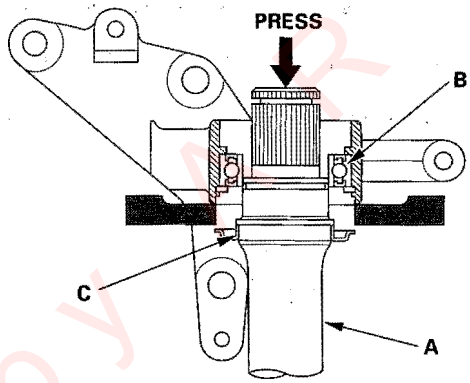

A/T model:

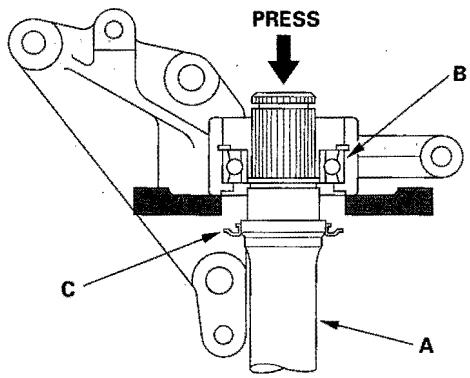

Protected by MR

3. Remove the internal snap ring.

M/T model:

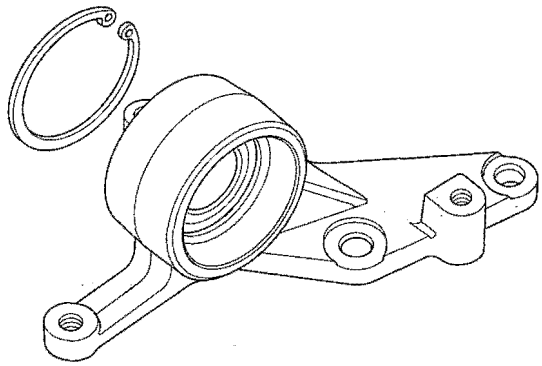

A/T model:

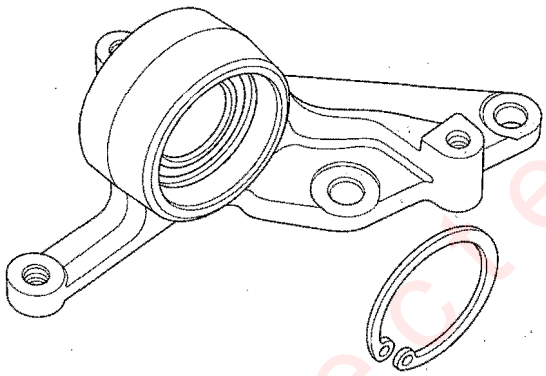

4. Press the intermediate shaft bearing (A) out of the bearing support (B) using the special tools and a press.

M/T model:

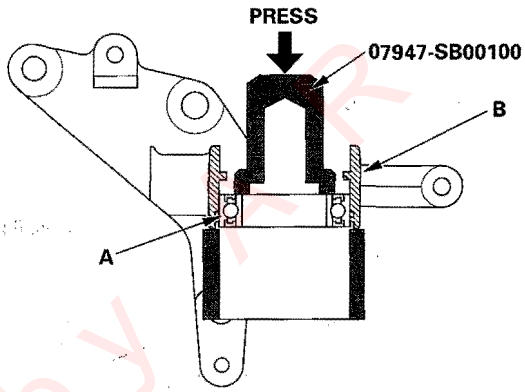

A/T model:

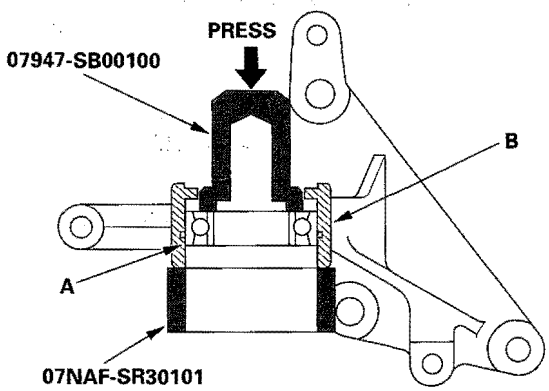

Protected by ARR

(cont'd)

Exploded View

M/T model:

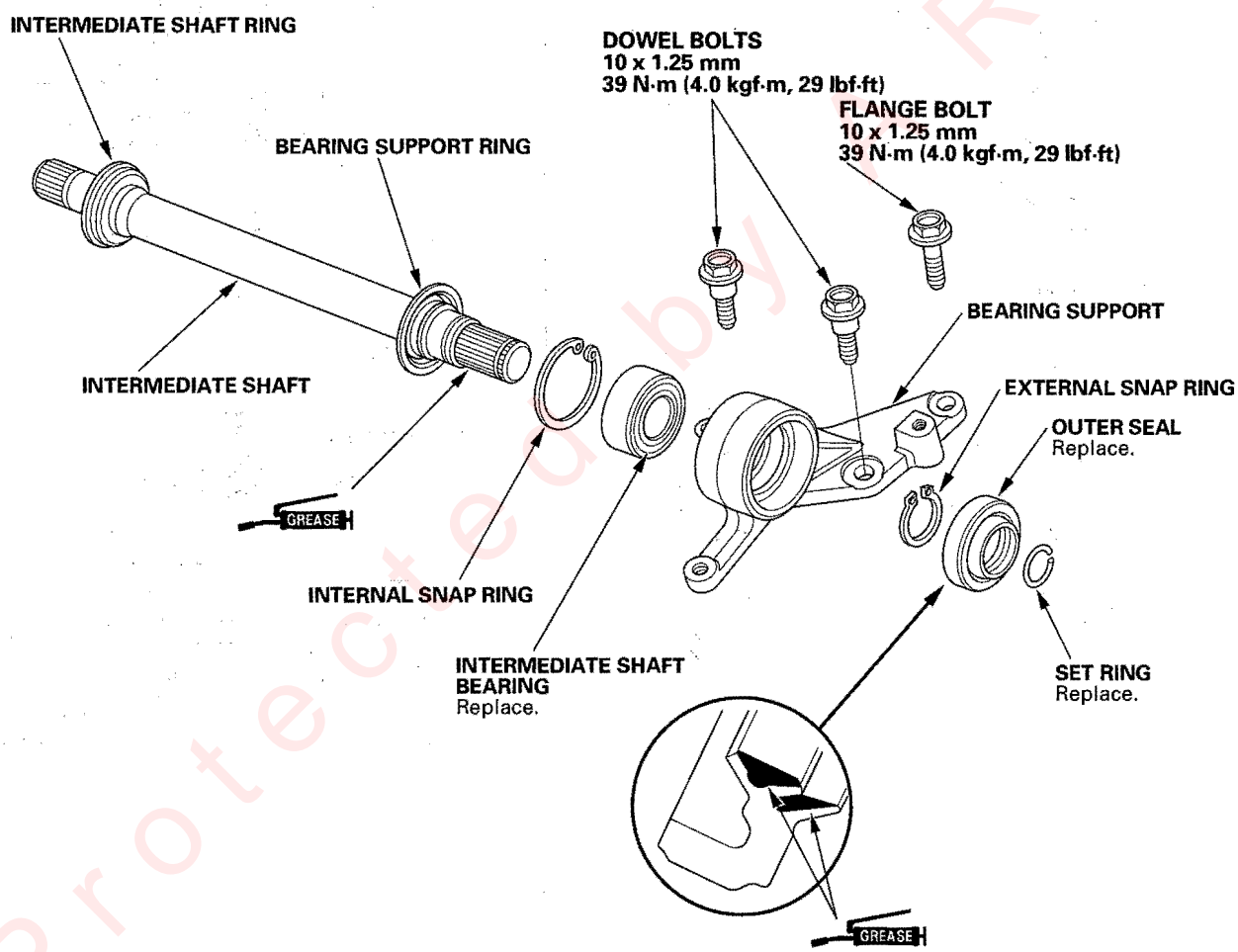

Pack the interior of the outer seal.

Protected by R

Exploded View

A/T model:

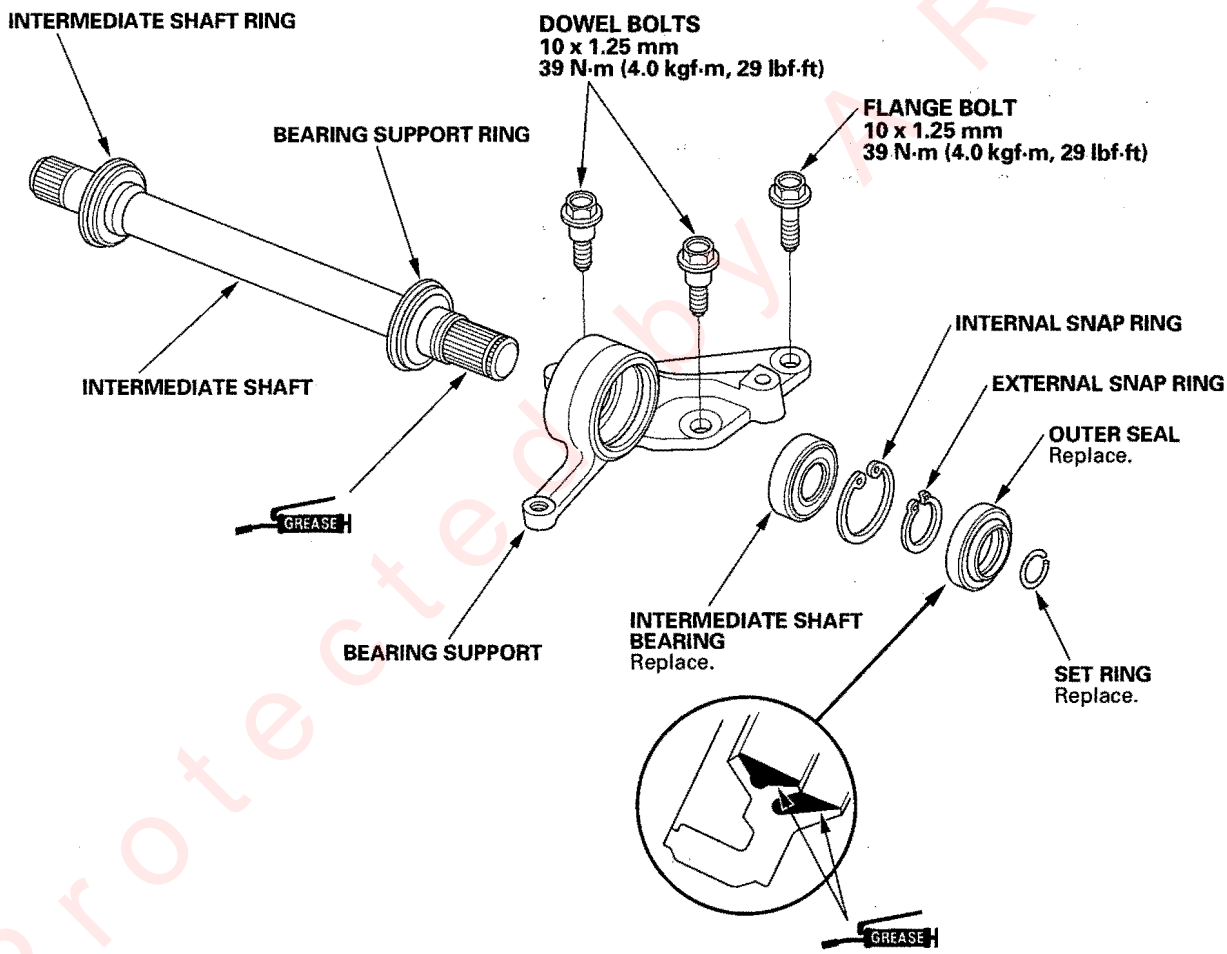

Pack the interior of the outer seal.

Protected by AR

Special Tools Required
- Driver 07749-0010000
- Attachment, 52 x 55 mm 07746-0010400
- Attachment, 35 mm I.D. 07746-0030400
- Oil seal driver 07GAD-PH70201

NOTE: Refer to the Exploded View as needed during this procedure.

1. Clean the disassembled parts with solvent, and dry them with compressed air. Do not wash the rubber parts with solvent.

2. Press the intermediate shaft bearing (A) into the bearing support (B) using the special tools and a press.

M/T model:

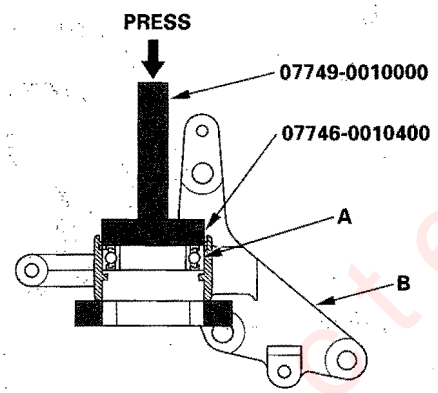

A/T model:

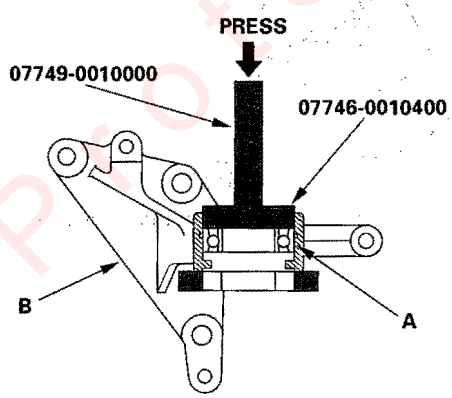

3. Install, then seat the internal snap ring in the groove of the bearing support.

M/T model:

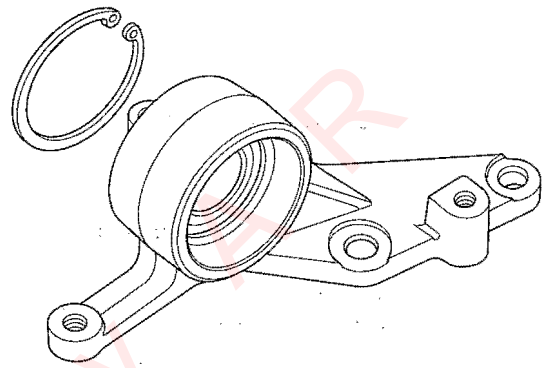

A/T model:

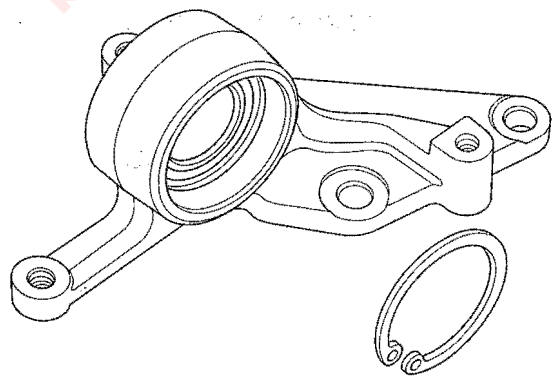

Protected by AR

4. Press the intermediate shaft (A) into the shaft bearing (B) using the special tool and a press.

M/T model:

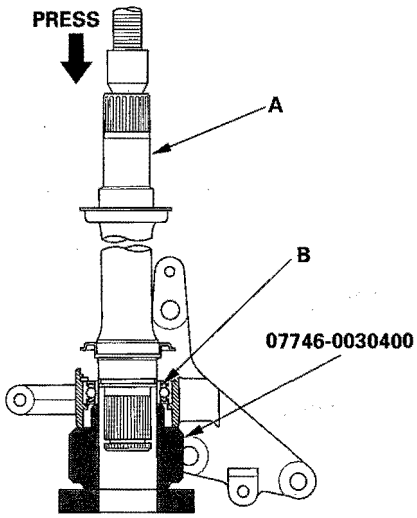

A/T model:

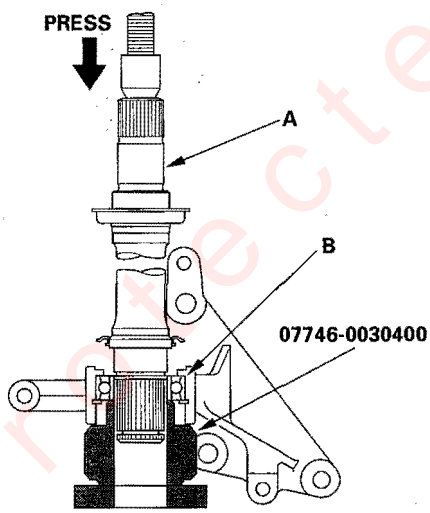

5. Install, then seat the external snap ring (A) in the groove of the intermediate shaft (B).

M/T model:

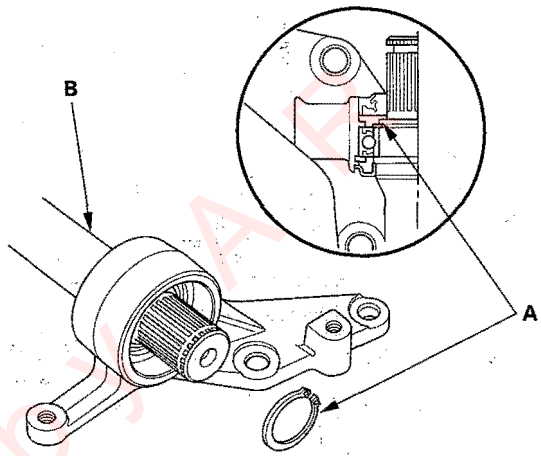

A/T model:

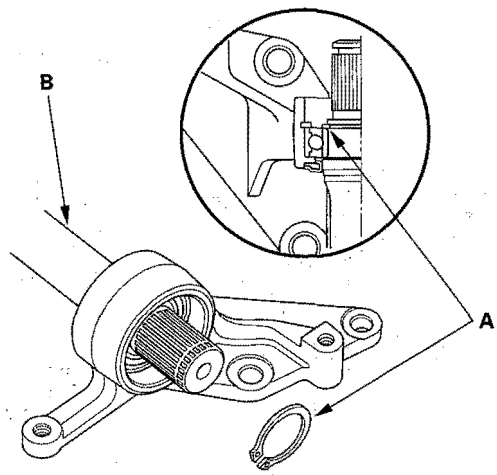

Protected by AP

6. Install the outer seal (A) into the bearing support (B) using the special tool and a press.

M/T model:

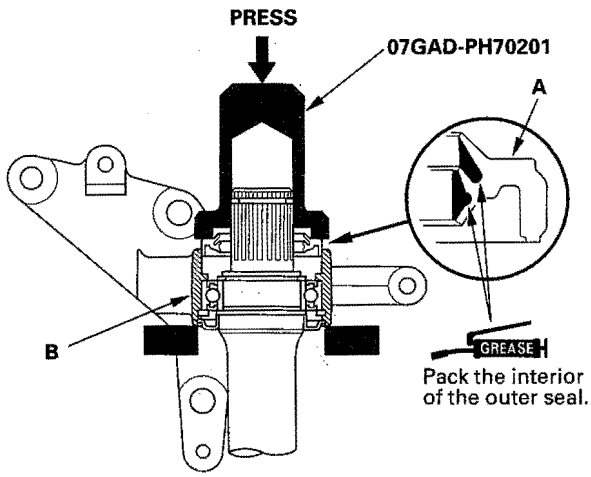

A/T model:

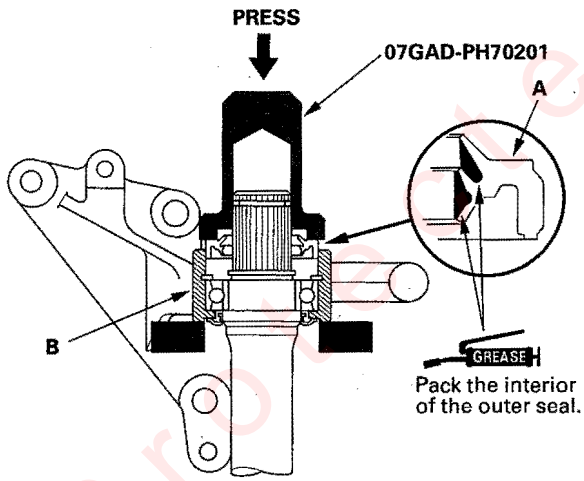

7. Install the set ring.

M/T model:

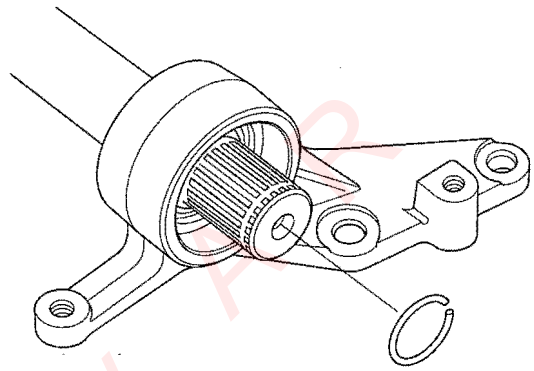

A/T model:

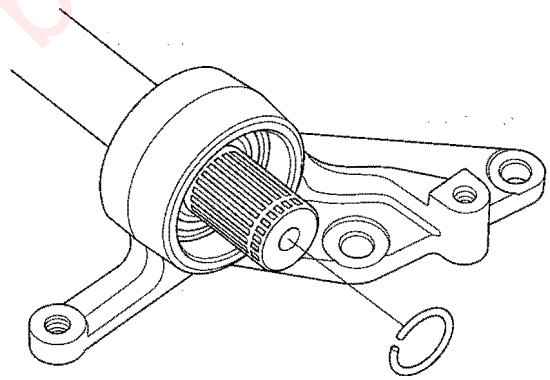

Produced by ARR

Intermediate Shaft Installation

1. Use solvent or brake cleaner to thoroughly clean the areas where the intermediate shaft (A) contacts the transmission (differential), and dry with compressed air. Insert the intermediate shaft assembly into the differential. Hold the intermediate shaft horizontally to prevent damage to the differential oil seal (B).

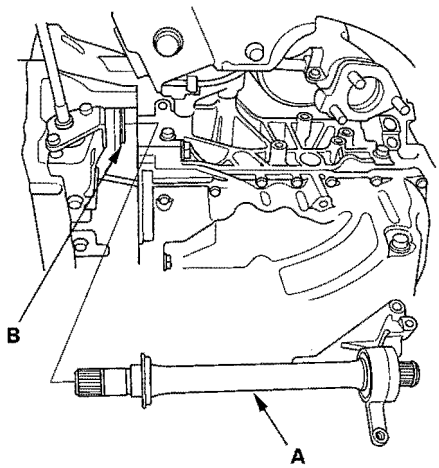

2. Install the flange bolt (A) and two dowel bolts (B).

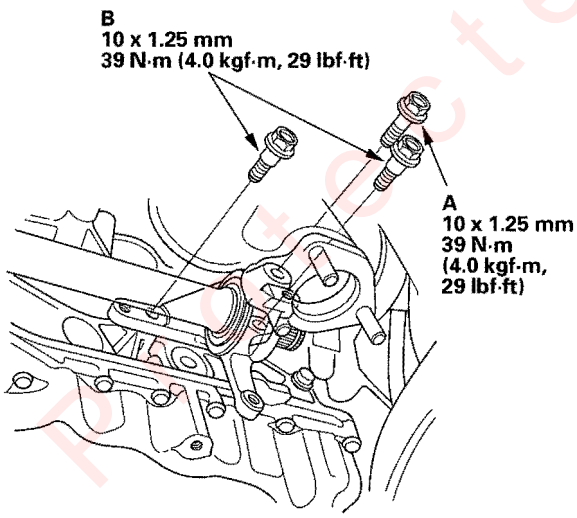

3. Install the heat shield (A) and exhaust pipe bracket (B).

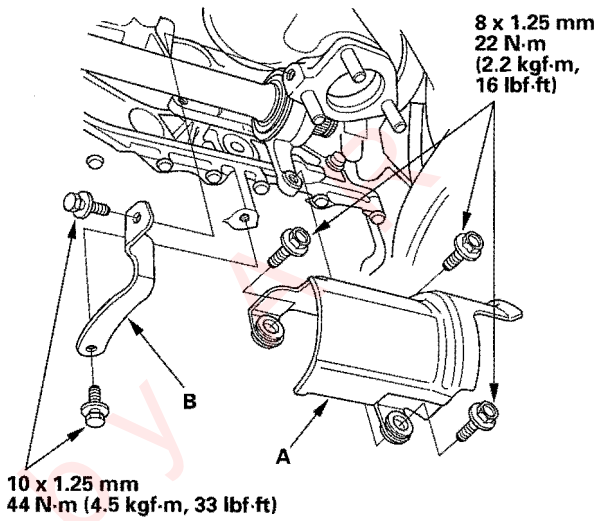

4. Install exhaust pipe A (see step 23 on page 5-17).

5. Install the right driveshaft (see page 16-18).

6. Refill the transmission fluid.

   - Manual transmission (see page 13-10).
   - Automatic transmission (see page 14-204).

Protected by Copyright

Steering

Power Steering

Special Tools 17-2
Component Location Index 17-3
Symptom Troubleshooting Index 17-4
Symptom Troubleshooting 17-6
Steering Wheel Rotational Play Check 17-7
Power Assist Check 17-7
Steering Linkage and Gearbox Inspection 17-8
Pump Pressure Test with T/N 07406-0010001 17-9
Pump Pressure Test with T/N 07406-001000A 17-10
Fluid Leakage Inspection 17-11
Fluid Replacement 17-12
Power Steering Hose, Line, and
Pressure Switch Replacement 17-13
Pump Replacement 17-14
Pump Overhaul 17-16
Steering Wheel Removal 17-21
Steering Wheel Disassembly/Reassembly 17-22
Steering Wheel Installation 17-23
Steering Column Removal and Installation 17-24
Steering Column/Tilt/Telescopic Inspection 17-27
Steering Lock Replacement 17-27
Rack Guide Adjustment 17-28
Steering Gearbox Removal 17-29
Steering Gearbox Overhaul 17-36
Steering Gearbox Installation 17-52
Tie-rod Ball Joint Boot Replacement 17-58
Gearbox Mount Cushion Replacement 17-58

Protected by A R

Special Tools

Ref. No.	Tool Number	Description	Qty
①	07GAF-PH70100	Pilot Collar	1
②	07HAG-SF10100	Piston Seal Ring Guide	1
③	07HAG-SF1020A or 07HAG-SF10200	Piston Seal Ring Sizing Tool	1
④	07MAC-SL00200	Ball Joint Remover, 28 mm	1
⑤	07NAD-SR3020A	Cylinder End Seal Remover Attachment	1
⑥	07NAG-SR3090A	Valve Seal Ring Sizing Tool	1
⑦	07ZAB-S5A0100	Pulley Holder	1
⑧	07VAK-P8A011A	P/S Joint Adapter (Pump)	1
⑨	07VAK-P8A012B	P/S Joint Adapter Plate (Pump)	1
⑩	07RAK-S040122	P/S Joint Adapter (Hose)	1
⑪	07ZAG-S5A0300	Cylinder End Seal Slider	1
⑫	07406-0010001 or 07406-001000A	P/S Pressure Gauge	1
⑬	07746-0010100	Attachment, 32 x 35 mm	1
⑭	07749-0010000	Driver	1
⑮	07916-SA50001	Locknut Wrench, 40 mm	1
⑯	07965-SA50500	Front Hub Dis/Assembly Tool	1
⑰	07974-SA5020A or 07974-SA50200	Sleeve Seal Ring Sizing Tool	1
⑱	07974-SA50800	Ball Joint Boot Clip Guide	1

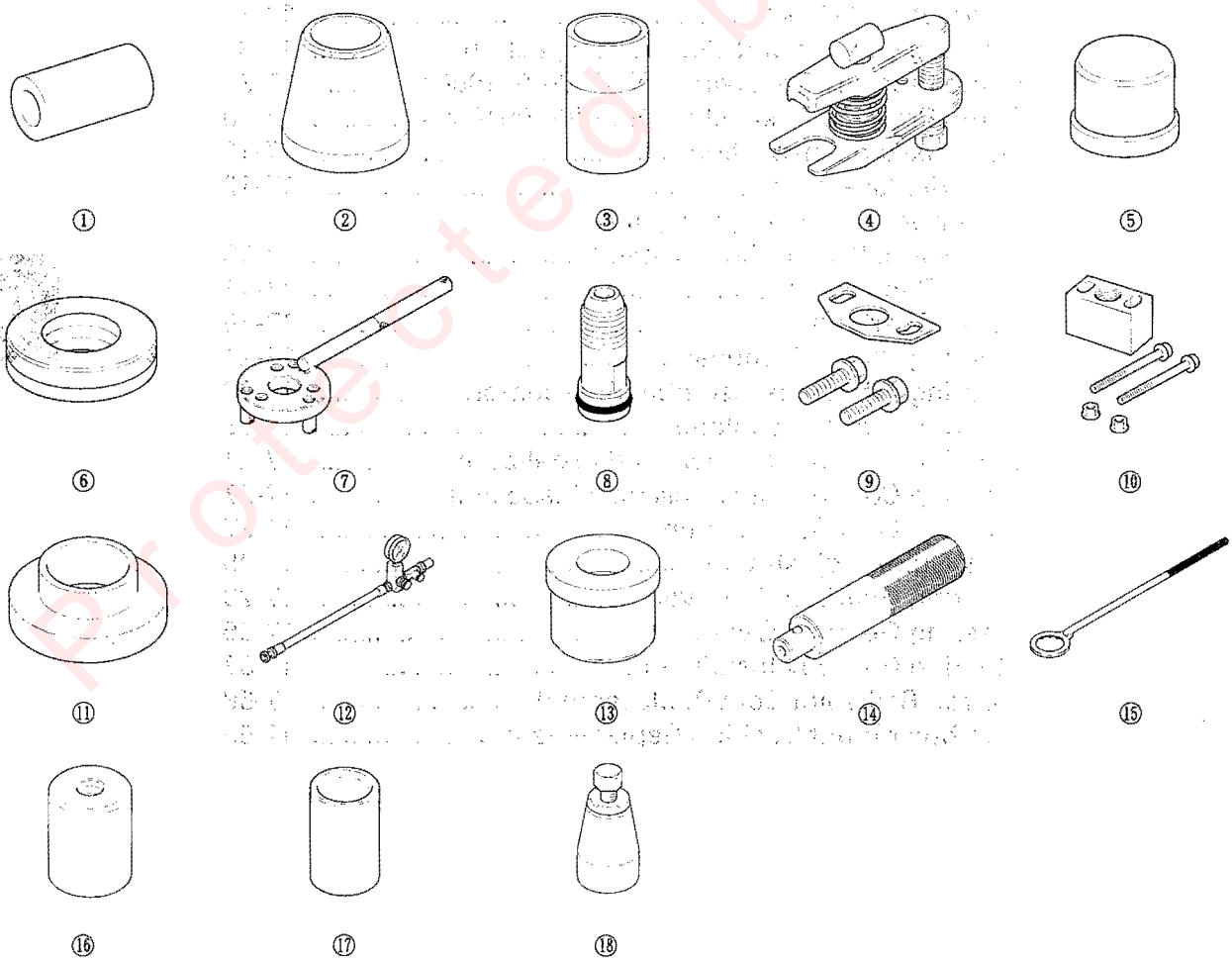

Protected by A R

Component Location Index

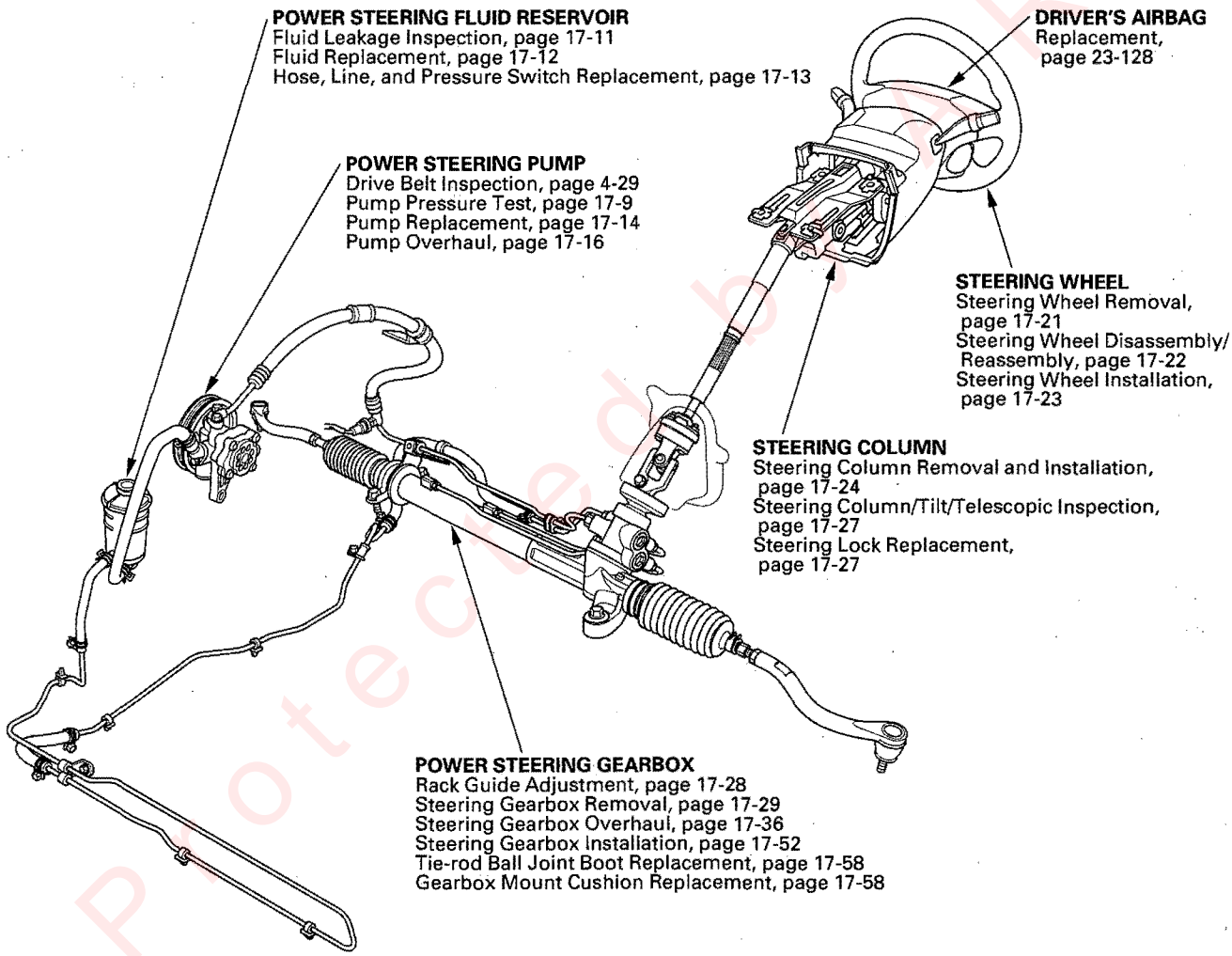

Protected by

Symptom Troubleshooting Index

Find the symptom in the chart below, and do the related procedures in the order listed until you find the cause.

Symptom	Procedure(s)	Also check for:
Hard steering	Troubleshoot the system (see page 17-6).	• Modified suspension • Damaged suspension • Tire sizes, tire varieties, and air pressure
Assist (excessively light steering at high speed)	Check the rack guide adjustment (see page 17-28).	Front wheel alignment (see page 18-5).
Shock or vibration when the steering wheel is turned to full lock	1. Check the rack guide adjustment (see page 17-28). 2. Check the drive belt for slippage (see page 4-29). 3. Check the power steering pump fluid pressure with T/N 07406-0010001 (see page 17-9) or T/N 07406-001000A (see page 17-10). 4. Overhaul the steering gearbox (see page 17-36).	
Steering wheel will not return smoothly	1. Check cylinder lines for deformation. 2. Check upper and lower ball joints for binding. 3. Check wheel alignment (see page 18-5). 4. Overhaul the steering gearbox (see step 1 on page 17-37).	
Uneven or rough steering	1. Check the rack guide adjustment (see page 17-28). 2. Check the drive belt (see page 4-29). 3. Check for low or erratic engine idle speed (see page 11-238). 4. Check for air in the power steering system due to air entering inlet side of pump. 5. Check for low fluid level in the power steering reservoir due to possible leaks in system. 6. Overhaul the steering gearbox (see step 1 on page 17-37).	
Steering wheel kicks back during wide turns	1. Check the drive belt (see page 4-29). 2. Check the power steering pump fluid pressure with T/N 07406-0010001 (see page 17-9) or T/N 07406-001000A (see page 17-10).	
Humming noise from the power steering system	1. Check when the noise occurs: • If the noise is heard 2—3 minutes after starting the engine in cold weather, this is normal. • If the noise is heard when the wheel is turned with the vehicle stopped, this is normal due to the fluid pulsation. 2. Check for the high-pressure hose touching the subframe or body. 3. Check for automatic transmission converter noise. 4. Check for air bubbles in the power steering fluid, leak on inlet side of pump. 5. Check for particle contamination of fluid and restricted filter in the reservoir.	Pump pressure

Protected by ARI

Power steering rack rattle or chattering	1. Check for loose steering components (tie-rod and ball joints). Tighten or replace as necessary. 2. Check the steering column shaft for wobbling. If the steering column wobbles, replace the steering column assembly (see page 17-24). 3. Check the rack guide adjustment (see page 17-28). 4. Check the power steering pump pulley: • If the pulley is loose, tighten it (see step 33 on page 17-20). • If the pump shaft is loose, replace the pump (see page 17-14).	
Hissing from the power steering system	• Check the fluid level. If low, fill the reservoir to the proper level and check for leaks. • Check the reservoir for leaks. • Check for crushed inlet hose or loose hose clamp allowing air into the suction side of the system. • Check the power steering pump shaft oil seal for leaks.	Air in the P/S fluid
Noise from the power steering pump	• Compare the pump noise at normal operating temperature to another like vehicle (pump noise for 2—3 minutes after starting the engine in cold weather is normal). • Remove and inspect the pump for wear and damage (see page 17-16).	• P/S pump pressure • Air in the P/S fluid
Squeaking from the power steering pump	Check the drive belt (see page 4-29).	
Fluid leaks from the steering gearbox	• Fluid leaks from the top of the valve body unit. Overhaul the valve body unit (see page 17-36). • Fluid leaks from the left boot. Replace the valve oil seal on the pinion shaft. Replace the cylinder end seal on the gearbox side. • Fluid leaks from the right boot. Replace the right cylinder end seal. • Fluid leaks from pinion shaft near the lower steering joint bolt. Overhaul the valve body unit (see page 17-36). • Fluid leaks from the steering damping valve covers on the valve body unit. Replace the valve housing.	
Fluid leaks from the power steering line	• Fluid leaks from the cylinder line connections (flare nuts). Tighten the connection and retest. • Fluid leaks from a damaged cylinder lines. Replace the cylinder line. • Fluid leaks from the pump outlet hose or return line fitting on the valve body unit (flare nuts). Tighten the fitting and retest. If it still leaks, replace the hose, the line, or valve body unit as necessary.	
Fluid leaks from the power steering pump	• Fluid leaks from the front oil seal. Replace the front oil seal. • Fluid leaks from the power steering pump housing. Replace the leaking O-rings or seals (see page 17-16), and if necessary replace the power steering pump (see page 17-14).	
Fluid leaks from the power steering reservoir	• Fluid leaks from around the reservoir cap because fluid level is too high. Drain the reservoir to the proper level. If the fluid is aerated check for an air leak on the inlet side of pump. • Fluid leaks from reservoir. Check for the reservoir for cracks and replace as necessary.	
Fluid leaks from the power steering pump outlet hose (high-pressure)	• Check the fitting for loose bolts. If the bolts are tight, replace the fitting O-ring. • Fluid leaks at the swagged joint. Replace the outlet hose.	
Fluid leaks from the power steering pump inlet hose (low-pressure)	Check the hose for damage, deterioration, or improper assembly. Replace or repair as necessary.	

Protected by AR

Symptom Troubleshooting

Hard steering

1. Check the power assist (see page 17-7).

   Is the initial turning load more than 29 N (3.0 kgf, 6.6 lbf)?

   YES — Go to step 2.
   NO — Power assist is OK. ■

2. Connect the P/S pressure gauge T/N 07406-0010001 (see page 17-9) or T/N 07406-001000A (see page 17-10) to the pump.

3. Measure steady-state fluid pressure from the pump at idle with T/N 07406-0010001 (see step 10 on page 17-9) or T/N 07406-001000A (see step 9 on page 17-10).

   Is the pressure 1,500 kPa (15 kgf/cm², 213 psi) or less?

   YES — Go to step 4.
   NO — Go to step 8.

4. Measure the pump relief pressure at idle with T/N 07406-0010001 (see step 11 on page 17-9) or T/N 07406-001000A (see step 10 on page 17-10).

   Is the pressure 7,940 — 8,630 kPa (81 — 88 kgf/cm², 1,150 — 1,250 psi) or more?

   YES — Go to step 5.
   NO — Go to step 9.

5. With a spring scale, measure the power assist in both directions, to the left and to the right.

   Are the two measurements within 5.0 N (0.51 kgf, 1.12 lbf) of each other?

   YES — Go to step 6.
   NO — Go to step 11.

6. Measure the fluid pressure with T/N 07406-0010001 or with T/N 07406-001000A with both pressure gauge valves open (if so equipped), while turning the steering wheel fully to the left and fully to the right.

   Is the pressure 7,940 — 8,630 kPa (81 — 88 kgf/cm², 1,150 — 1,250 psi) or more?

   YES — Go to step 7.
   NO — Faulty gearbox. ■

7. Adjust the rack guide (see page 17-28), and retest.

   Is the steering OK?

   YES — Repair is completed. ■

   NO — Faulty gearbox. ■

8. Check for feed and return lines between the pump and the gearbox for clogging and deformation.

   Are the lines clogged or deformed?

   YES — Repair or replace the lines. ■

   NO — Faulty valve body unit. ■

9. Disassemble the pump (see page 17-17).

10. Check the flow control valve for smooth movement and leaks (see step 11 on page 17-17).

    Is the flow control valve OK?

    YES — Faulty pump assembly. ■

    NO — Faulty flow control valve. ■

11. Check the cylinder lines A and B for deformation (see page 17-13).

    Are the A or B lines deformed?

    YES — Replace the lines. ■

    NO — Go to step 12.

12. Check for a bent rack shaft or misadjusted rack guide (too tight).

    Is the rack shaft bent or the rack guide adjusted too tight?

    YES — Replace the rack shaft or readjust the rack guide. ■

    NO — Faulty valve body unit. ■

Protected by A P

Steering Wheel Rotational Play Check

1. Turn the front wheels to the straight ahead position.
2. Measure how far you can turn the steering wheel left and right without moving the front wheels.
   - If the play is within the limit, the gearbox and linkages are OK.
   - If the play exceeds the limit, adjust the rack guide (see page 17-28). If the play is still excessive after rack guide adjustment, inspect the steering linkage and gearbox (see page 17-8).

ROTATIONAL PLAY: 0—10 mm (0—0.39 in.)

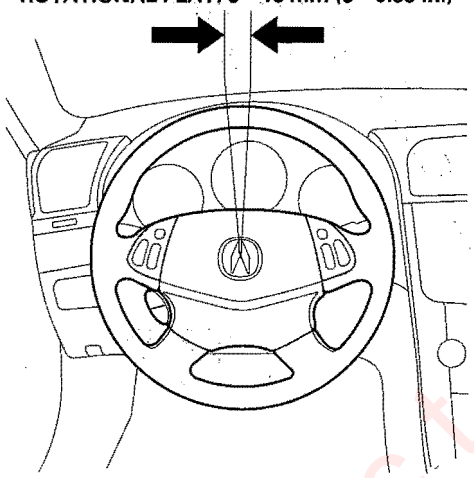

Power Assist Check

NOTE: This test should be done with original equipment tires and wheels at the correct tire pressure.

1. Check the power steering fluid level (see page 17-12).
2. Start the engine, let it idle, and turn the steering wheel from lock-to-lock several times to warm up the fluid.
3. Attach a commercially available spring scale to the steering wheel. With the engine idling and the vehicle on a clean, dry floor, pull the scale as shown and read it as soon as the tires begin to turn.
   - If the scale reads no more than the specification, the gearbox and pump are OK.
   - If the scale reads more than the specification, troubleshoot the steering system (see page 17-6).

INITIAL TURNING LOAD: 29 N (3.0 kgf, 6.6 lbf)

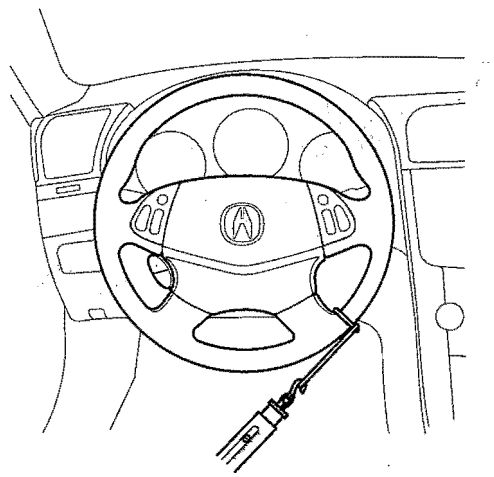

Protected by AR

Steering Linkage and Gearbox Inspection

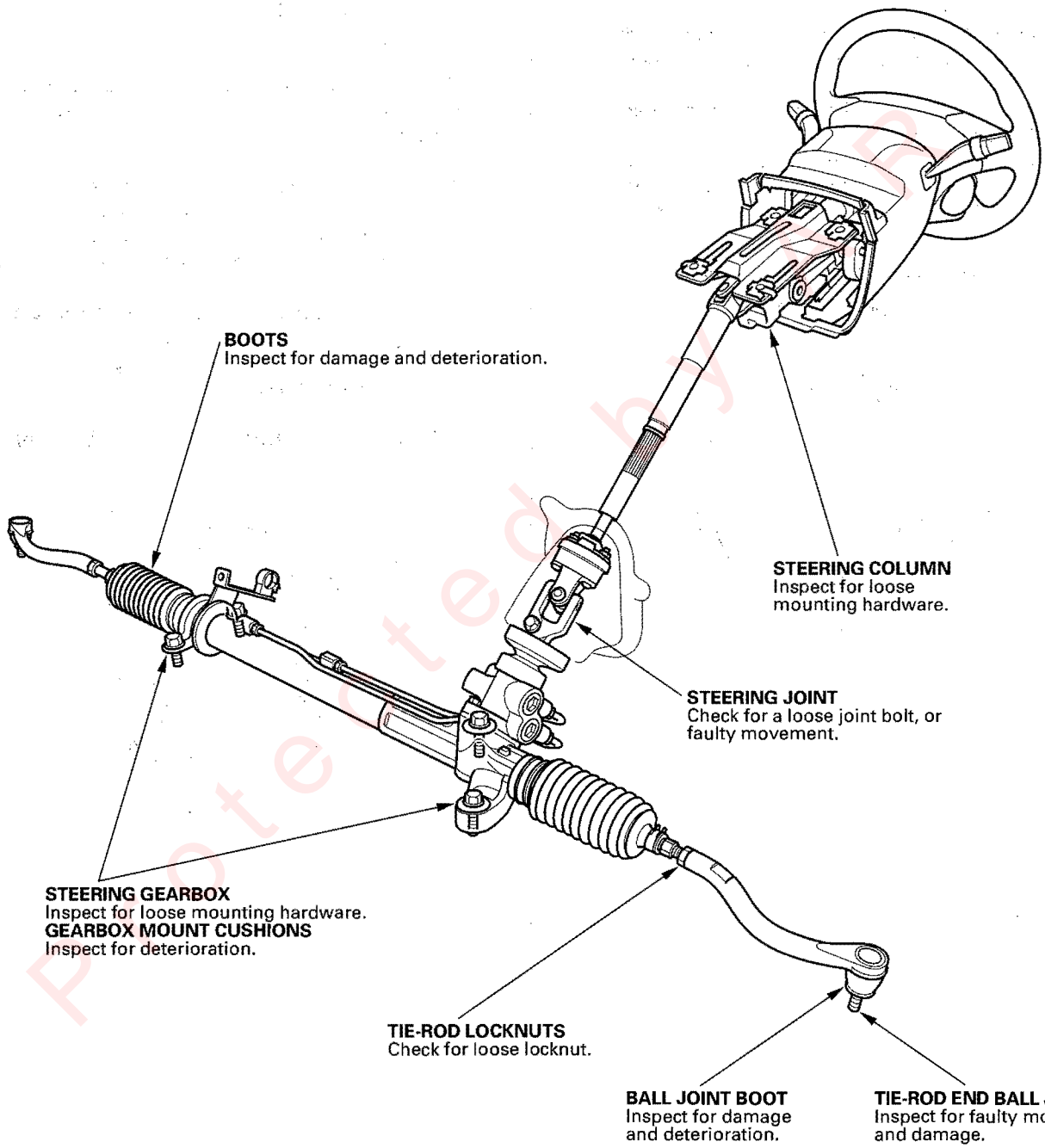

Protected by

Pump Pressure Test with T/N 07406-0010001

Special Tools Required
- P/S joint adapter (pump) 07VAK-P8A011A
- P/S joint adapter plate (pump) 07VAK-P8A012B
- P/S joint adapter (hose) 07RAK-S040122
- P/S pressure gauge 07406-0010001

Check the fluid pressure as follows to determine whether the trouble is in the pump or gearbox.

1. Remove the right side engine component cover (A).

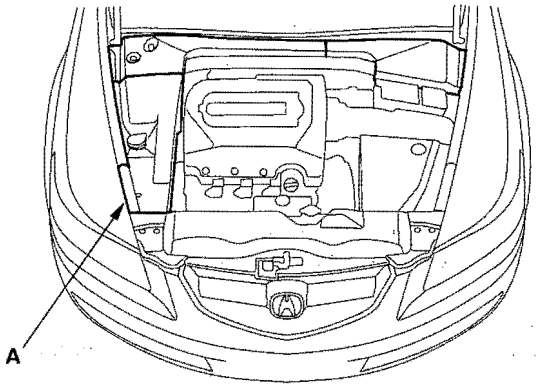

2. Check the power steering fluid level (see page 17-12).

3. Disconnect the pump outlet hose (A) from the pump outlet with care so as not to spill the power steering fluid on the frame and other parts, then install the P/S joint adapter (pump) on the pump outlet (B) with the P/S joint outlet plate.

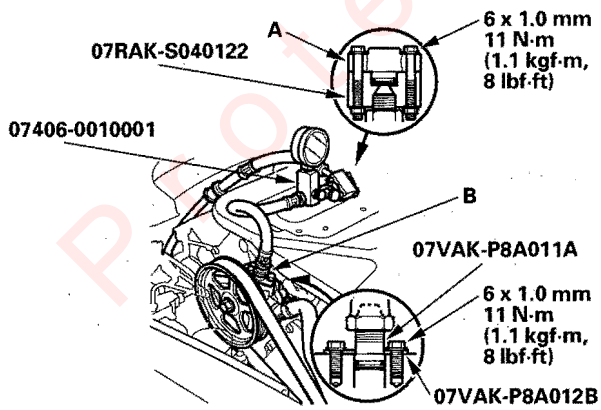

4. Connect the P/S joint adapter (hose) to the P/S pressure gauge, then connect the pump outlet hose to the P/S joint adapter (hose).

5. Install the P/S pressure gauge to the P/S joint adapter (pump).

6. Fully open the shut-off valve (A).

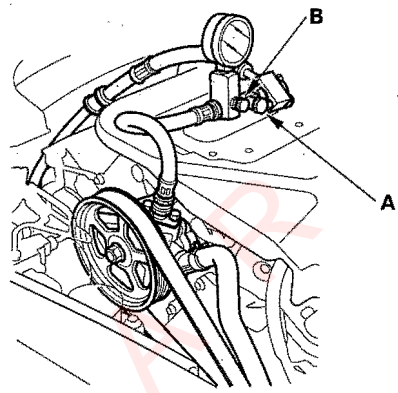

7. Fully open the pressure control valve (B).

8. Start the engine and let it idle.

9. Turn the steering wheel from lock-to-lock several times to warm the fluid to operating temperature.

10. Measure steady-state fluid pressure while the engine is idling. If the pump is in good condition, the gauge should read no more than 1,500 kPa (15 kgf/cm², 213 psi).
    If it reads high, check for:
    - Clogged or deformed feed or return line between the pump and gearbox.
    - Clogged valve body unit.

11. Close the shut-off valve, then close the pressure control valve gradually until the pressure gauge needle is stable. Read the pressure.

    NOTICE
    Do not keep the shut-off valve closed more than 5 seconds or the pump could be damaged by over-heating.

12. Immediately open the shut-off valve fully. If the pump is in good condition, the gauge should read at least 7,940—8,630 kPa (81—88 kgf/cm², 1,150—1,250 psi). A low reading means pump output is too low for full assist. Repair or replace the pump.

Protected by ARR

Pump Pressure Test with T/N 07406-001000A

Special Tools Required
- P/S joint adapter (pump) 07VAK-P8A011A
- P/S joint adapter plate (pump) 07VAK-P8A012B
- P/S joint adapter (hose) 07RAK-S040122
- P/S pressure gauge 07406-001000A

Check the fluid pressure as follows to determine whether the trouble is in the pump or gearbox.

1. Remove the right side engine component cover (A).

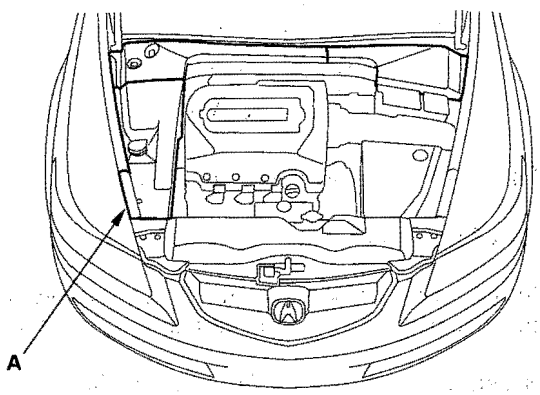

2. Check the power steering fluid level (see page 17-12).

3. Disconnect the pump outlet hose (A) from the pump outlet with care so as not to spill the power steering fluid on the frame and other parts, then install the P/S joint adapter (pump) on the pump outlet (B) with the P/S joint outlet plate.

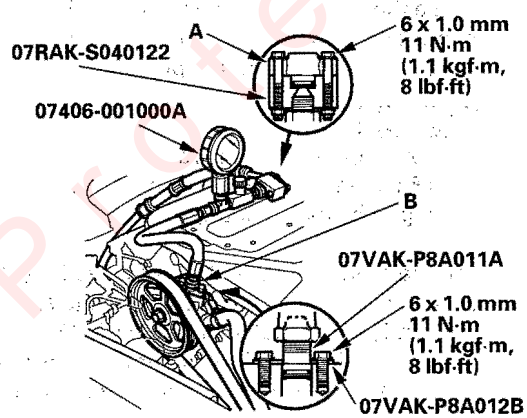

4. Connect the P/S joint adapter (hose) to the P/S pressure gauge, then connect the pump outlet hose to the P/S joint adapter (hose).

5. Install the P/S pressure gauge to the P/S joint adapter (pump).

6. Open the shut-off valve (A) fully.

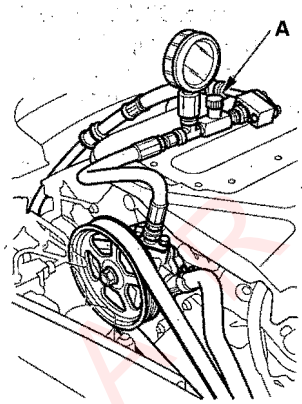

7. Start the engine and let it idle.

8. Turn the steering wheel from lock-to-lock several times to warm the fluid to operating temperature.

9. Measure steady-state fluid pressure while the engine is idling. If the pump is in good condition, the gauge should read no more than 1,500 kPa (15 kgf/cm², 213 psi).
   If it reads high, check for:
   - Clogged or deformed feed or return line between the pump and gearbox.
   - Clogged valve body unit.

10. Let the engine idle, and gradually close the shut-off valve and immediately read the pressure.

NOTICE
Do not keep the shut-off valve closed more than 5 seconds or the pump could be damaged by over-heating.

11. Immediately open the shut-off valve fully. If the pump is in good condition, the gauge should read at least 7,940—8,630 kPa (81—88 kgf/cm², 1,150—1,250 psi). A low reading means pump output is too low for full assist. Repair or replace the pump.

Protected by ARR

Fluid Leakage Inspection

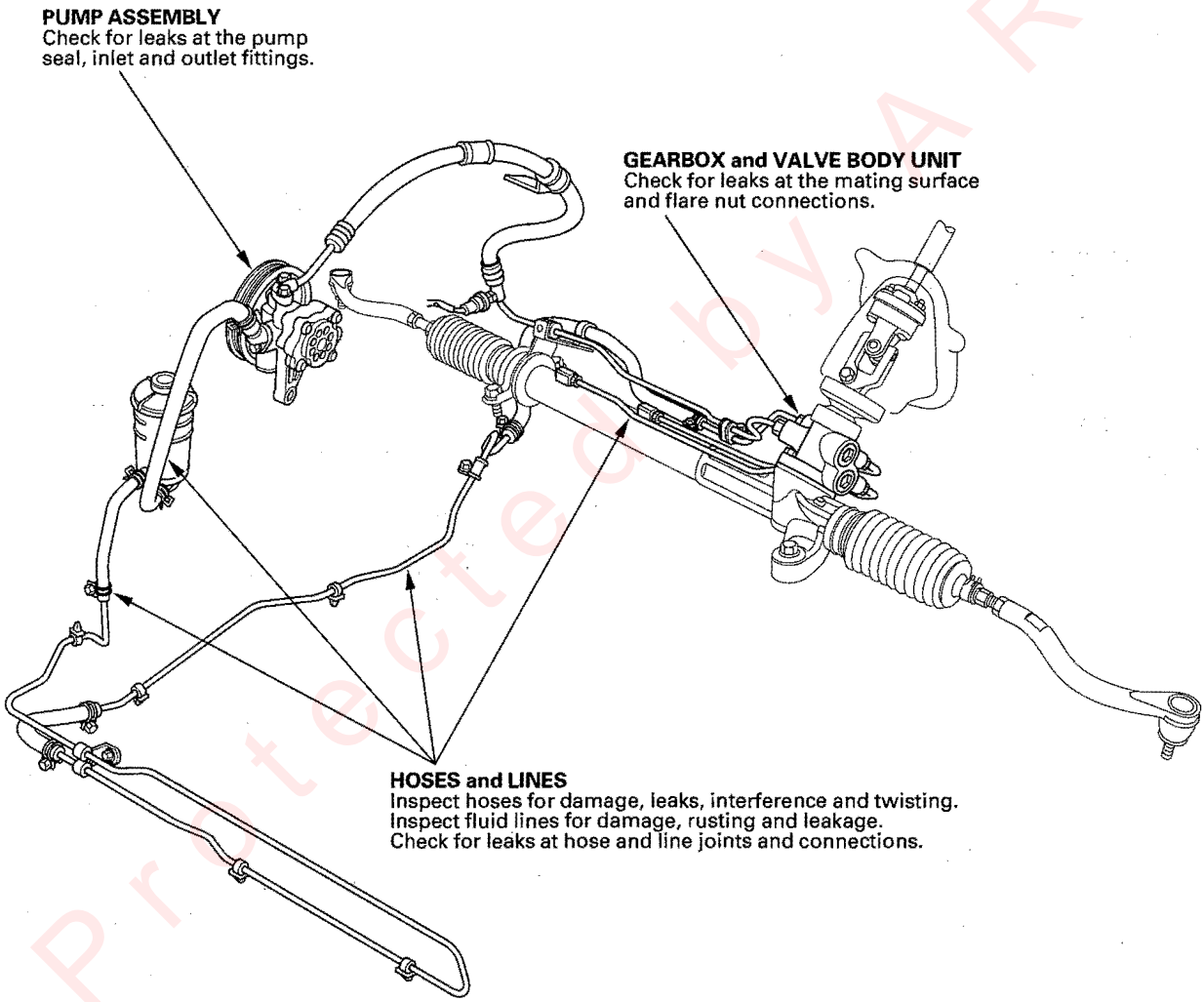

Protected by A R

Fluid Replacement

Remove the right side engine component cover (A).

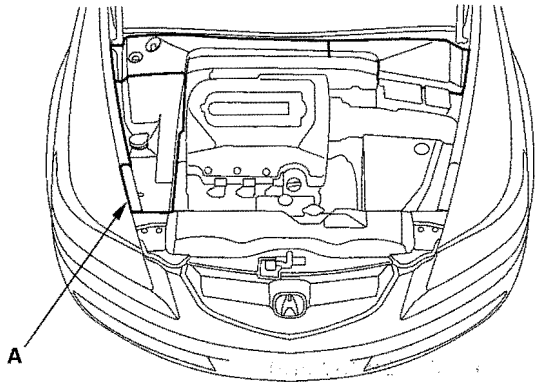

Check the reservoir (A) at regular intervals, and add the recommended fluid as necessary. Always use Honda Power Steering Fluid. Using any other type of power steering fluid or automatic transmission fluid can cause increased wear and poor steering in cold weather.

SYSTEM CAPACITY:
1.1 ℓ (1.16 US. qt) at disassembly
RESERVOIR CAPACITY:
0.32 ℓ (0.33 US. qt)

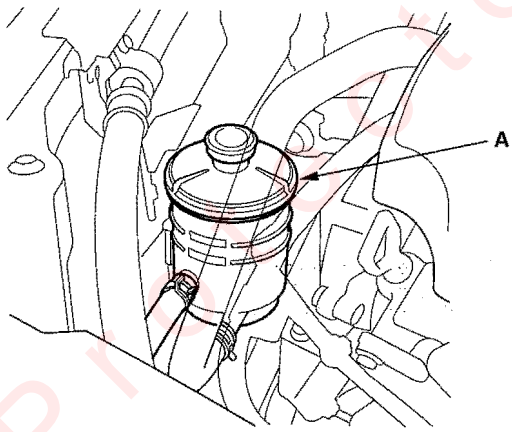

1. Raise the reservoir, then disconnect the return hose (A) to drain the reservoir. Take care not to spill the fluid on the body and parts. Wipe off any spilled fluid at once.

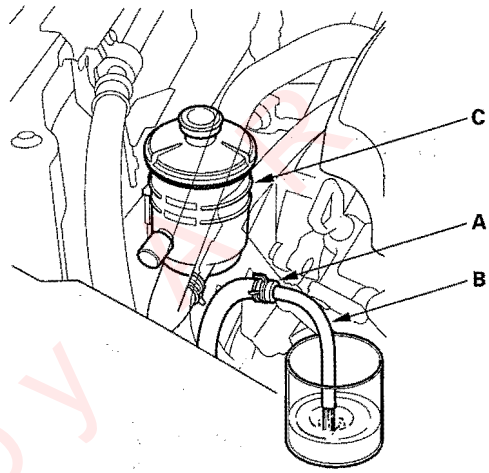

2. Connect a hose (B) of suitable diameter to the disconnected return hose, and put the hose end in a suitable container.
3. Start the engine, let it run at idle, and turn the steering wheel from lock-to-lock several times. When fluid stops running out of the hose, shut off the engine. Discard the fluid.
4. Reinstall the return hose on the reservoir.
5. Fill the reservoir to the upper level line (C).
6. Start the engine and run it at fast idle, then turn the steering from lock-to-lock several times to bleed air from the system.
7. Recheck the fluid level and add some if necessary. Do not fill the reservoir beyond the upper level line.
8. If the fluid is contaminated, dark, or discolored, repeat the procedure as necessary.

Presented by ARK

Power Steering Hose, Line, and Pressure Switch Replacement

Note these items during installation:

- Connect each hose to the corresponding line securely until it contacts the stop on the line. Install the clamp or adjustable clamp at the specified distance from the hose end as shown.
- Check all clamps for deterioration or deformation; replace the clamps with new ones if necessary.
- Add the recommended power steering fluid to the specified level on the reservoir and check for leaks.

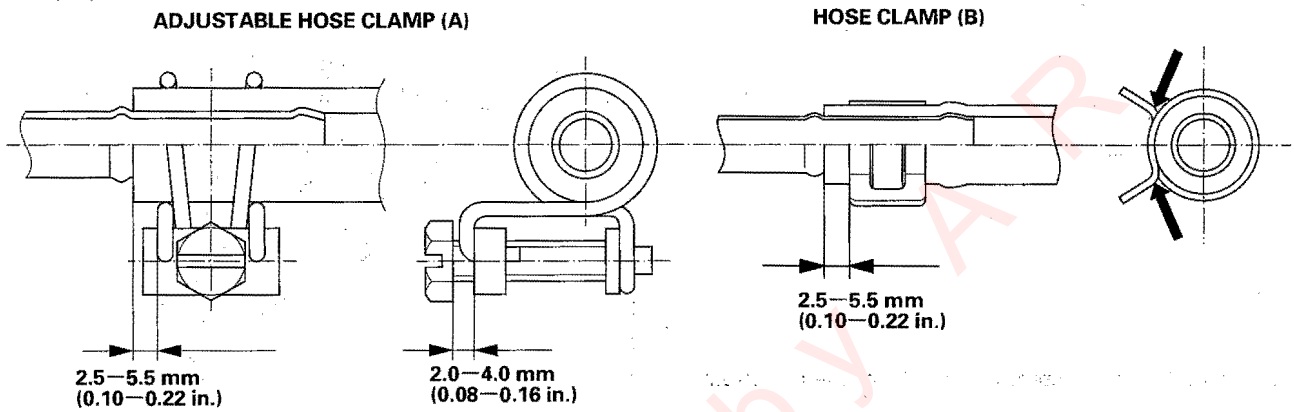

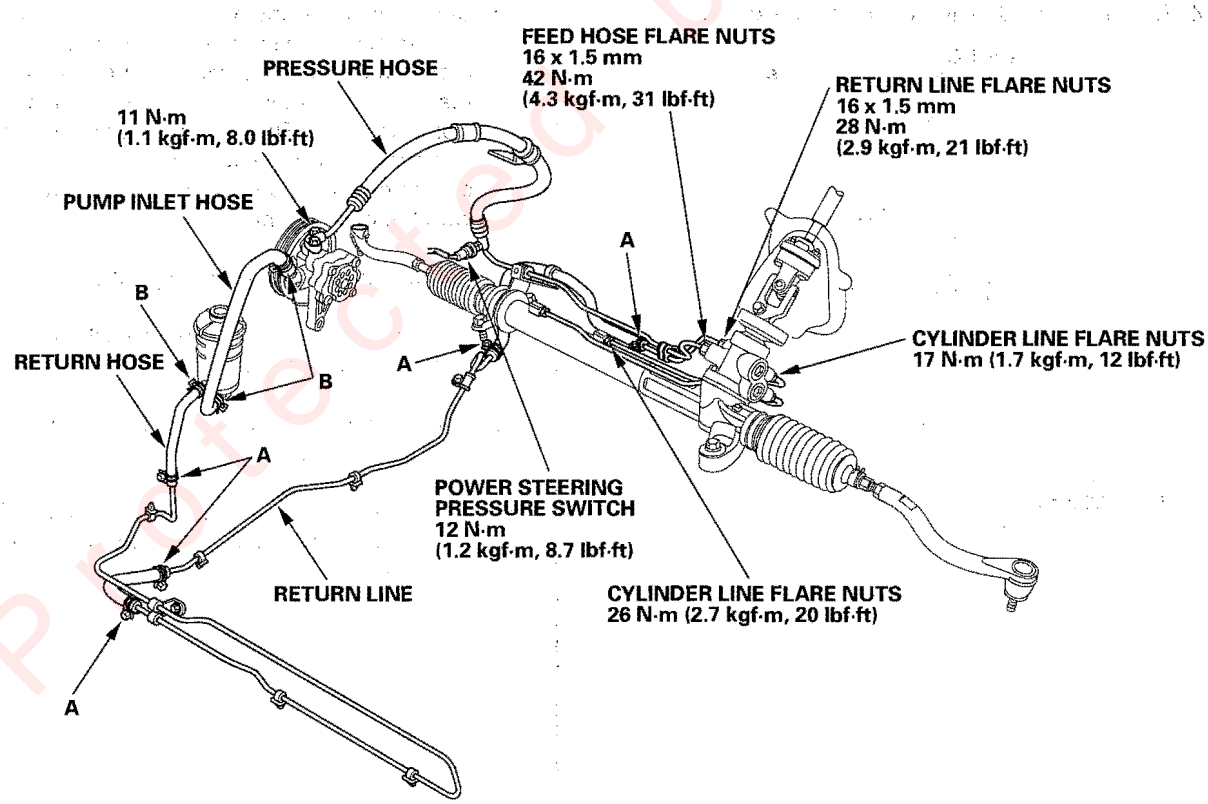

Protected by AR

Pump Replacement

1. Place a suitable container under the vehicle.
2. Remove the right side engine component cover (A).

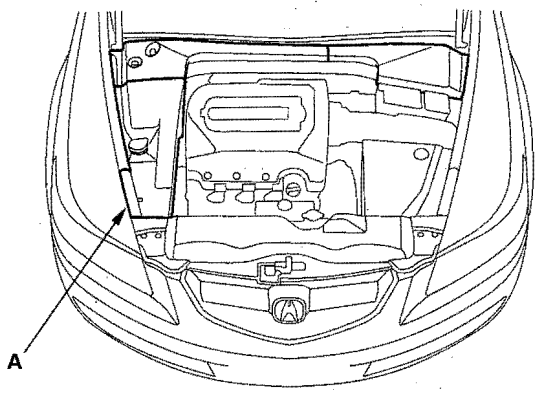

3. Drain the power steering fluid from the reservoir.
4. Remove the side engine mount bracket (A).

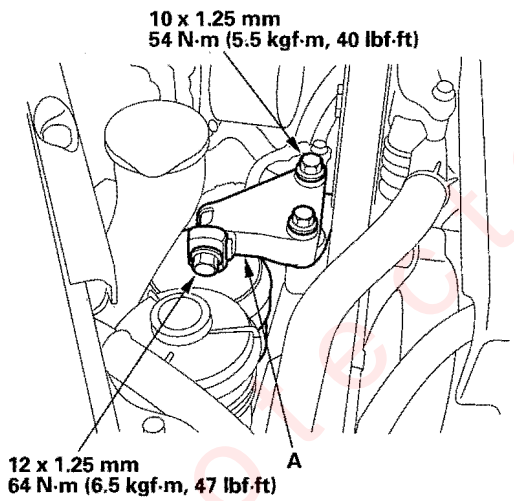

5. Remove the drive belt (A) from the pump pulley (see page 4-29).

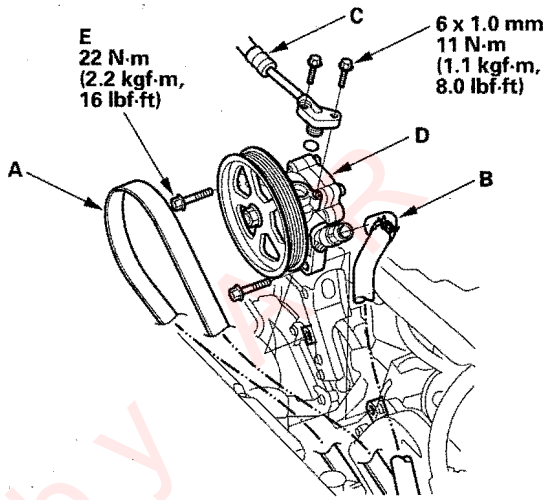

6. Cover the auto-tensioner, alternator, and A/C compressor with several shop towels to protect them from spilled power steering fluid. Disconnect the pump inlet hose (B) and pump outlet hose (C) from the pump (D), and plug them. Take care not to spill the fluid on the body or parts. Wipe off any spilled fluid at once. Do not turn the steering wheel with the pump removed.
7. Remove the pump mounting bolts (E).
8. Cover the opening of the pump with a piece of tape to prevent foreign material from entering the pump.
9. Connect the pump inlet hose and pump outlet hose onto the new pump.
10. Loosely install the pump in the pump bracket with the mounting bolts, then tighten the pump fittings securely.

Protected by

11. Tighten the pump mounting bolts to the specified torque.

12. Install the drive belt (A).

    Note these items during belt installation:
    - Make sure that the belt is properly positioned on the pulleys (B).
    - Do not get power steering fluid or grease on the auto-tensioner, alternator, A/C compressor, and drive belt or pulley faces. Clean off any fluid or grease before installation.

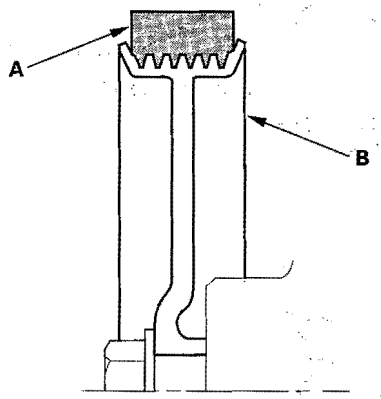

13. Install the side engine mount bracket. Tighten the bolts to the specified torque.

14. Fill the reservoir to the upper level line (see page 17-12).

15. Install the right side engine component cover.

Protected by AR

Pump Overhaul

Exploded View

Replace the pump as an assembly if the parts indicated with asterisk (*) are worn or damaged.

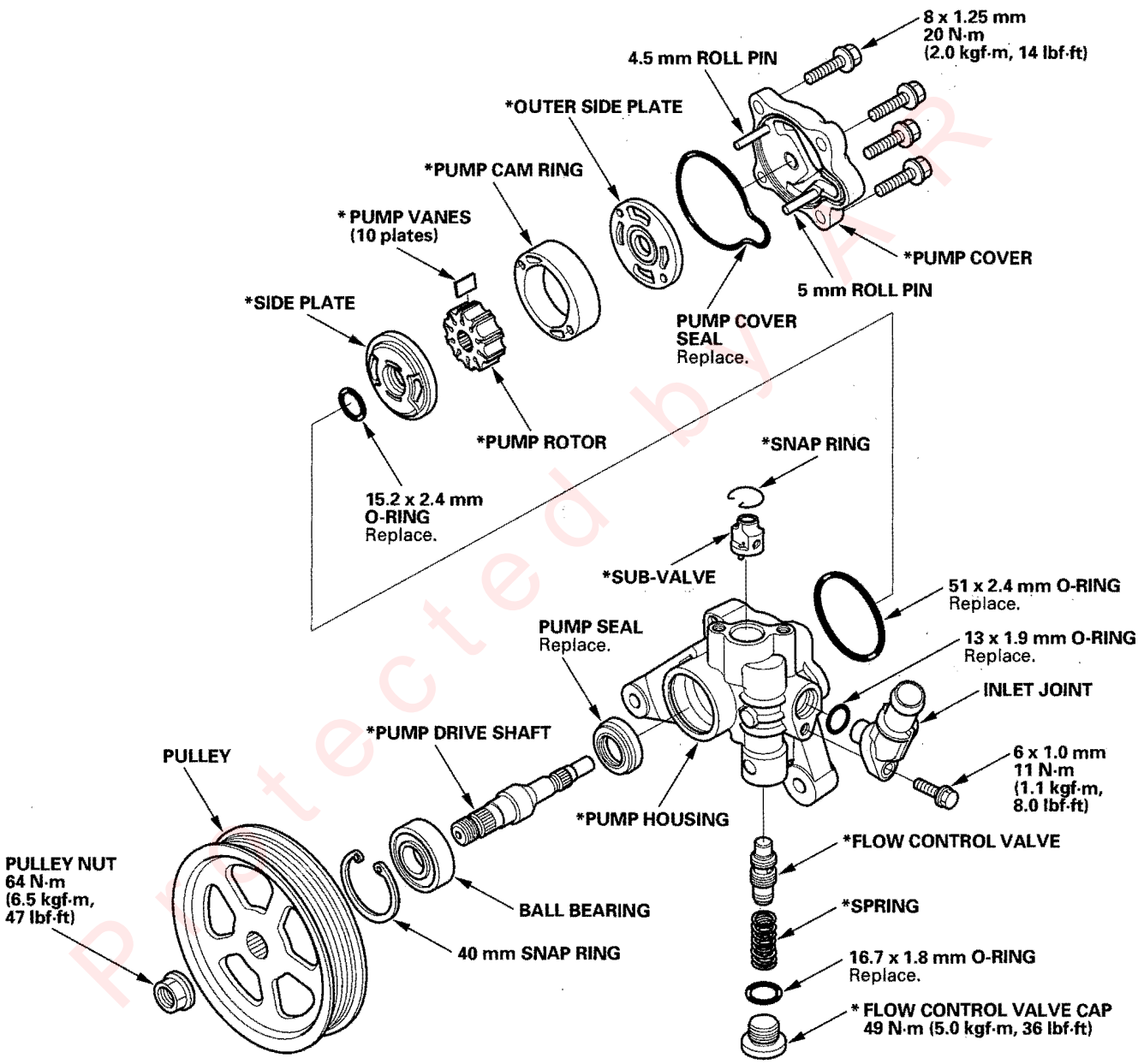

Protected by ARR

Special Tools Required
Pulley holder 07ZAB-S5A0100

Disassembly

NOTE: Refer to the Exploded View as needed during the following procedure.

1. Drain the fluid from the pump.
2. Remove the power steering pump (see page 17-14).
3. Hold the power steering pump (A) in a vise with soft jaws (B), then hold the pulley (C) with the special tool (D), and remove the pulley nut (E) and pulley. Be careful not to damage the pump housing with the jaws of the vise.

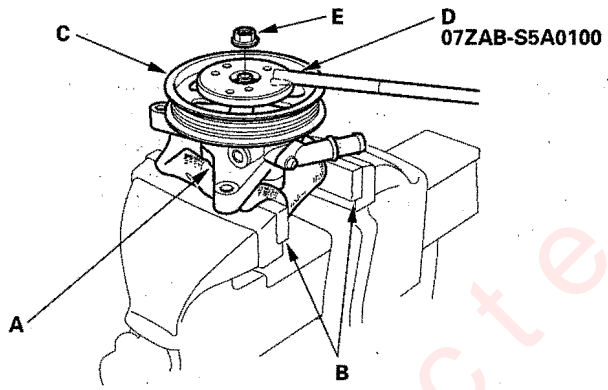

4. Remove the inlet joint and O-ring.
5. Loosen the flow control valve cap with a hex wrench, and remove it and the O-ring, the flow control valve and spring.
6. Remove the pump cover and pump cover seal.
7. Remove the outer side plate, cam ring, rotor, vanes, side plate and O-rings.
8. Remove the snap ring, then remove the sub-valve from the pump housing.
9. Remove the snap ring, then remove the pump drive shaft by tapping the shaft end with the plastic hammer.
10. Remove the seal from the pump housing.

Inspection

11. Check the flow control valve for wear, burrs, and other damage to the edges of the grooves in the valve.

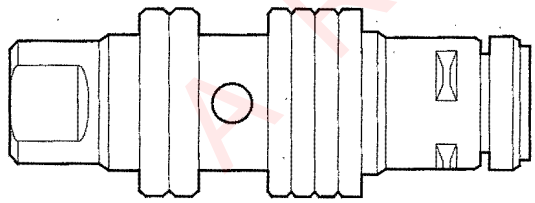

12. Inspect the bore of the flow control valve on the pump housing for scratches and wear.
13. Slip the flow control valve back in the pump housing, and check that it moves in and out smoothly. If OK, go to step 14; if not, replace the pump as an assembly. The flow control valve (A) is not available separately.

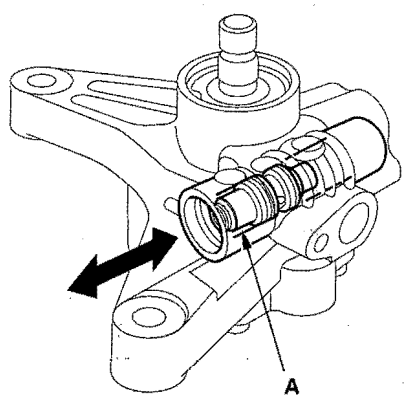

(cont'd)

Protected by AR

Pump Overhaul (cont'd)

14. Attach a hose (A) to the end of the flow control valve (B) as shown. Then submerge the flow control valve in a container of power steering fluid or solvent (C), and blow in the hose.

    - If air bubbles leak through the valve at less than 98 kPa (1.0 kgf/cm², 14.2 psi), replace the pump as an assembly. The flow control valve is not available separately.
    - If the flow control valve OK, set it aside for reassembly later.

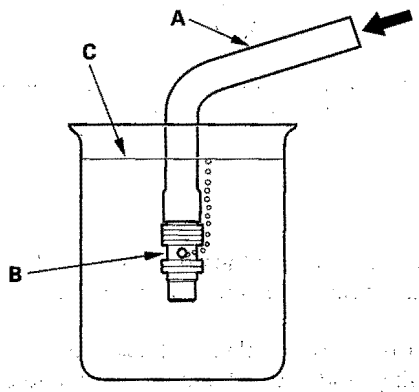

15. Inspect the ball bearing by rotating the outer race slowly. If you feel any play (axial or radial) or roughness remove the faulty ball bearing (A), and install a new one (B).

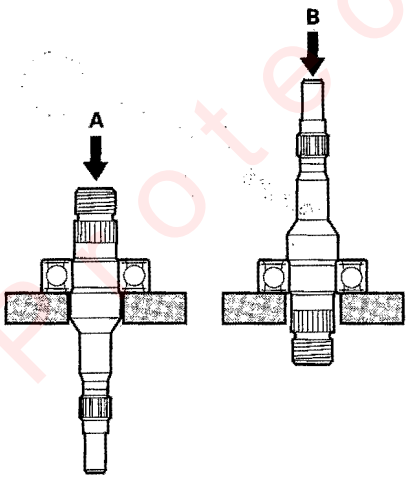

16. Inspect each part shown with an asterisk in the Exploded View. If any of them are worn or damaged, replace the pump as an assembly.

Reassembly

17. Align the pin (A) of the sub-valve (B) with the oil passage (C) in the pump housing, and push the sub-valve into place, then install the snap ring (D).

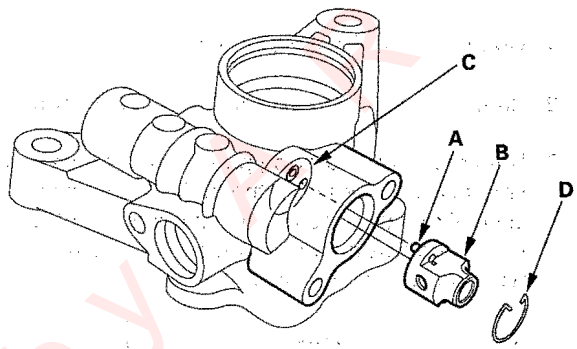

18. Install the new pump seal (A) (with its grooved side facing in) into the pump housing by hand first, then position the pump drive shaft (B) in the pump housing. Press the pump drive shaft and pump seal with the appropriate size socket wrench (C) as shown.

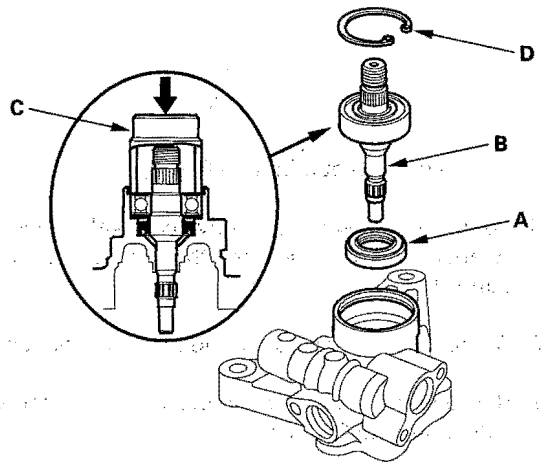

19. Install the 40 mm snap ring (D) with its radiused edge facing out.

Protected by

20. Coat the new pump cover seal (A) with power steering fluid, and install it into the groove in the pump cover (B).

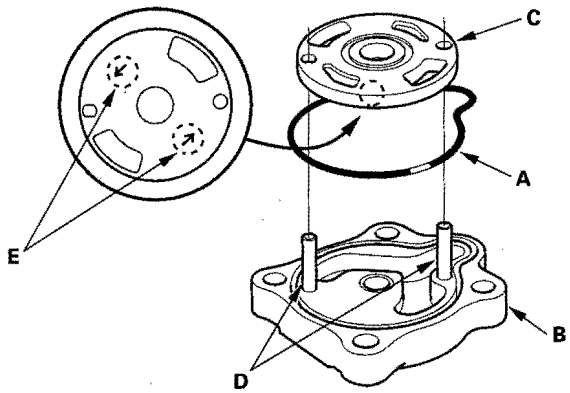

21. Install the outer side plate (C) over the two roll pins (D) with its arrow marks stamped (E) facing down.

22. Set the pump cam ring (A) over the two roll pins with its "•" mark (B) facing down.

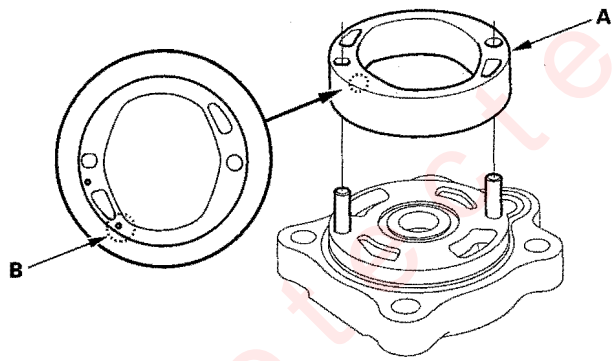

23. Assemble pump rotor (A) to the pump cover (B) with its "•" mark (C) facing up.

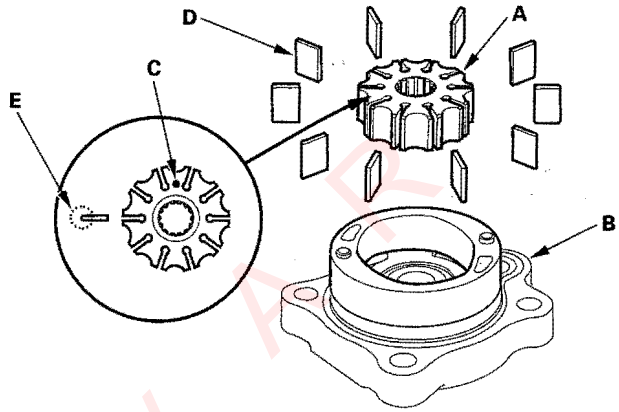

24. Set the 10 vanes (D) in the grooves in the rotor. Make sure that the round ends (E) of the vanes are in contact with the sliding surface of the cam ring.

25. Coat the new 15.2 mm O-ring (A) with power steering fluid, and install it into the groove in the side plate (B).

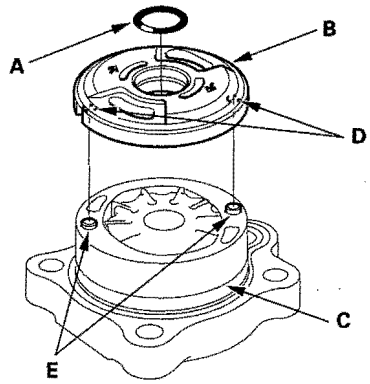

26. Install the side plate on the cam ring (C) by aligning the roll pin set holes (D) in the side plate with the roll pins (E).

(cont'd)

Protected by ARS

Pump Overhaul (cont'd)

27. Coat the new 51 mm O-ring (A) with power steering fluid, and position it in the bottom of the pump housing.

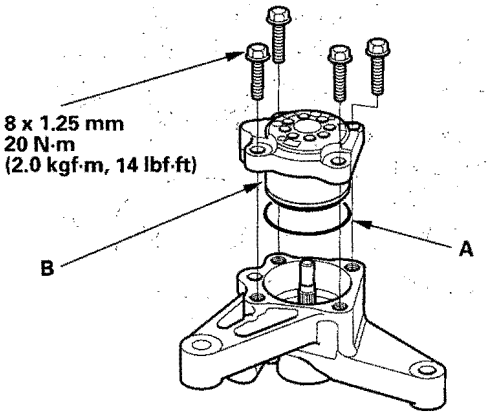

28. Install the pump cover assembly (B) in the pump housing. Tighten the bolts to the specified torque.

29. Coat the flow control valve (A) with power steering fluid, then install it and the spring (B) in the pump housing.

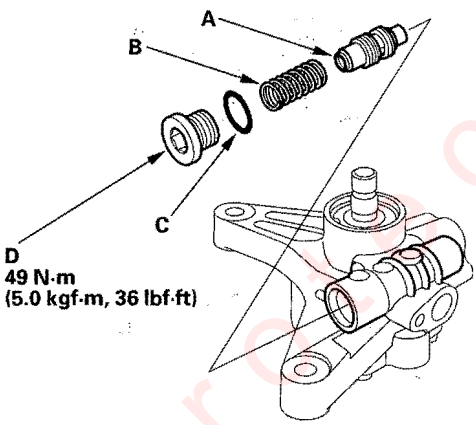

30. Coat the new 16.7 mm O-ring (C) with power steering fluid, and install it on the flow control valve cap (D), then install the cap on the pump housing, and tighten it to the specified torque.

31. Coat the new 13 mm O-ring (A) with power steering fluid, and install it on the inlet joint (B). Install the inlet joint on the pump housing.

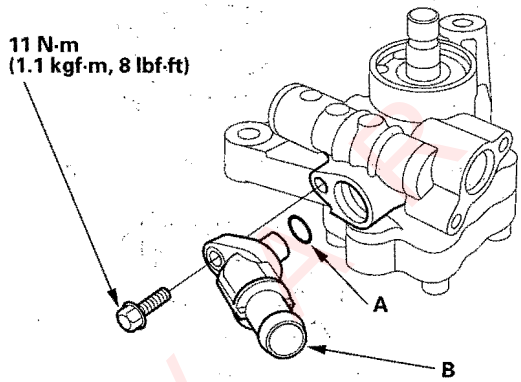

32. Install the pulley (A), then loosely install the pulley nut (B). Hold the steering pump in a vise with soft jaws. Be careful not to damage the pump housing with the jaws of the vise.

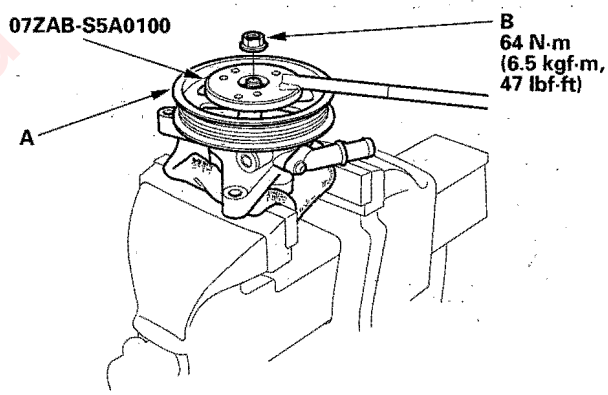

33. Hold the pulley with the special tool, and tighten the pulley nut to the specified torque.

34. Check that the pump turns smoothly by turning the pulley by hand. If it turns hard, loosen the four flange bolts on the cover, then retighten them in same manner as in step 28. Turn the pump again by hand.

Protected by

Steering Wheel Removal

SRS components are located in this area. Review the SRS component locations (see page 23-11) and precautions and procedures (see page 23-13) before performing repairs or service.

1. Make sure you have the anti-theft codes for the radio and the navigation system, then write down the customer's XM radio channel presets.

2. Align the front wheels straight ahead, then remove the driver's airbag from the steering wheel (see page 23-128).

3. Disconnect the cruise control set/resume switch, audio remote switch and HFL/HFL-voice control switch connectors (if equipped).

4. Loosen the steering wheel bolt (A).

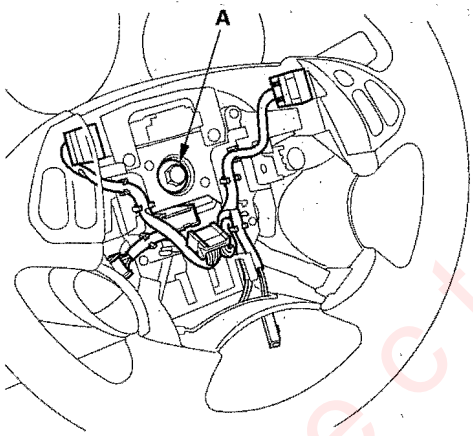

5. Install a commercially available steering wheel puller (A) on the steering wheel (B). Free the steering wheel from the steering column shaft by turning the pressure bolt (C) of the puller.

   Note these items when removing the steering wheel:
   - Do not tap on the steering wheel or the steering column shaft when removing the steering wheel.
   - If you thread the puller bolts (D) into the wheel hub more than five threads, the bolts will hit the cable reel and damage it. To prevent this, install a pair of jam nuts five threads up on each puller bolt.

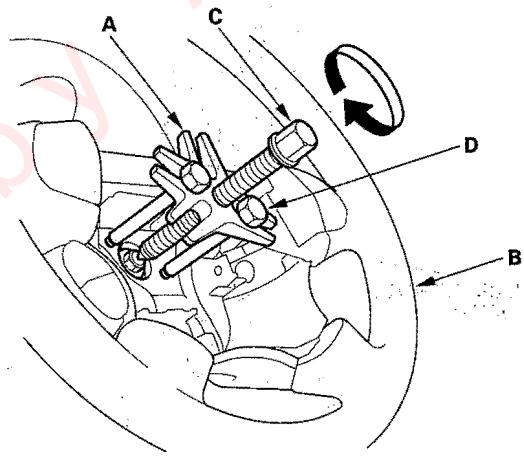

6. Remove the steering wheel puller, then remove the steering wheel bolt and steering wheel from the steering column.

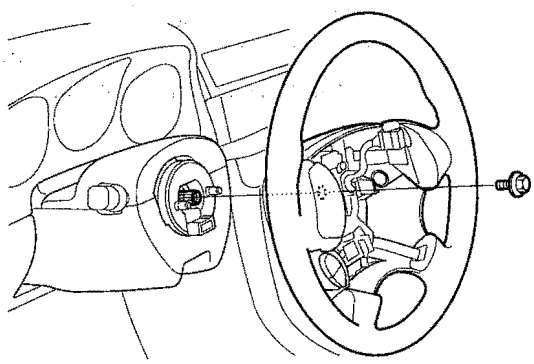

Protected by A

Steering Wheel Disassembly/Reassembly

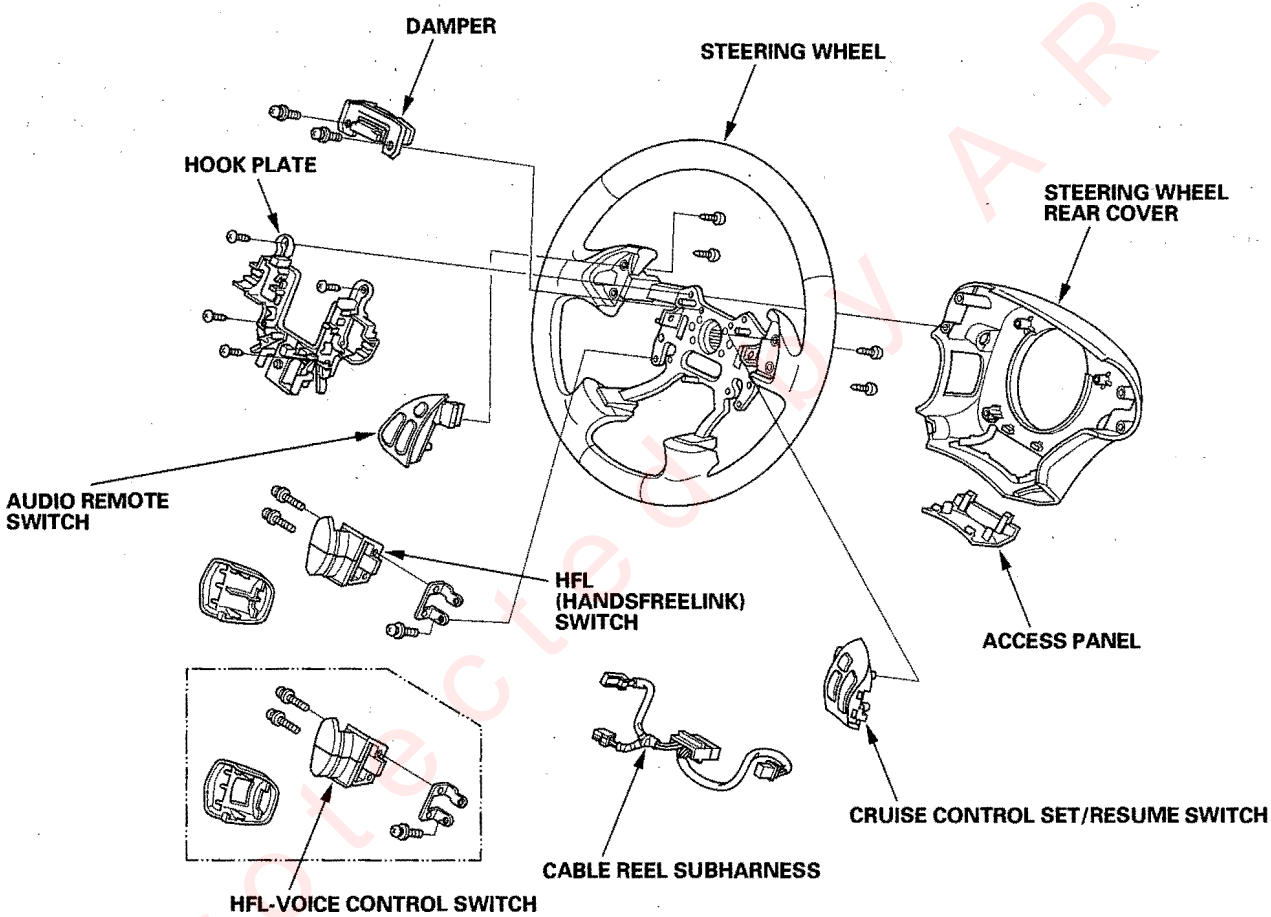

Protected by A R

Steering Wheel Installation

1. Before installing the steering wheel, make sure the front wheels are aligned straight ahead, then center the cable reel (A). Do this by first rotating the cable reel clockwise until it stops. Then rotate it counterclockwise about three full turns. The arrow mark (B) on the cable reel label point should point straight up.

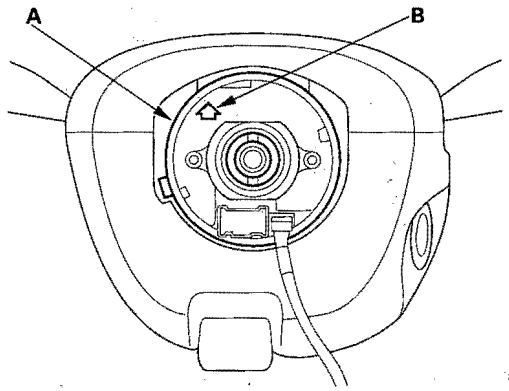

2. Position the two tabs (A) of the turn signal cancelling sleeve (B) as shown. Install the steering wheel on to the steering column shaft, making sure the steering wheel hub (C) engages the pins (D) of the cable reel and tabs of the canceling sleeve. Do not tap on the steering wheel or steering column shaft when installing the steering wheel.

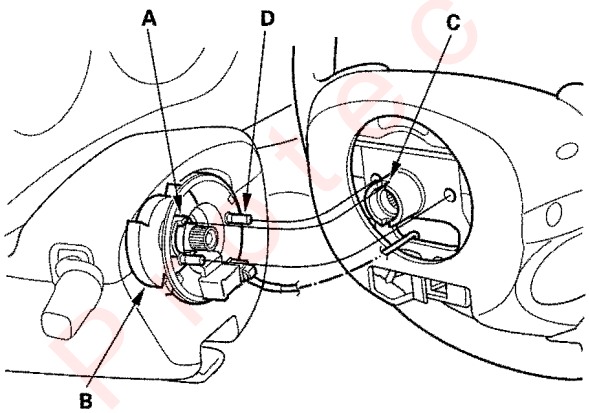

3. Install the steering wheel bolt (A) and tighten it to the specified torque. Connect the audio remote switch, the cruise control set/resume switch and the HFL/HFL-voice control switch connectors (if equipped). Make sure the wire harness is routed and fastened properly.

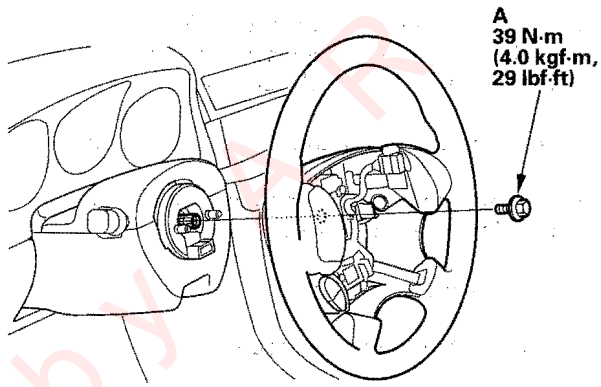

4. Install the driver's airbag, and confirm that the system is operating properly (see page 23-128).

5. Enter the anti-theft codes for the radio and the navigation system, then enter the customer's XM radio channel presets. Reset the clock.

6. Check the cruise control, audio remote, navigation system, voice control, HFL, and turn signal canceling for proper operation.

Protected by AR

Steering Column Removal and Installation

SRS components are located in this area. Review the SRS component locations (see page 23-11) and precautions and procedures (see page 23-13) before performing repairs or service.

Removal

1. Make sure you have the anti-theft codes for the radio and the navigation system, then write down the customer's XM radio channel presets.
2. Disconnect the negative cable from the battery.
3. Remove the driver's airbag assembly and the steering wheel (see page 17-21).
4. Remove the column covers.
5. Remove the steering joint cover A.

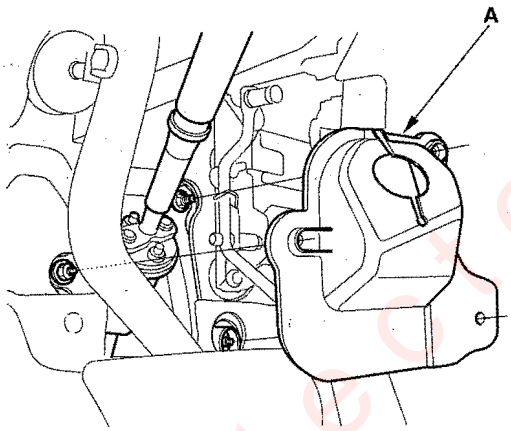

6. Release the tilt/telescopic lever, and adjust the steering column to full tilt up position, and to the full telescopic in position.
7. Tighten the tilt/telescopic lever.
8. Hold the slider shaft (A) on the column with a piece of wire (B) between the joint yoke (C) of the slider shaft and joint yoke (D) of the upper shaft to prevent the slider shaft from pulling out.

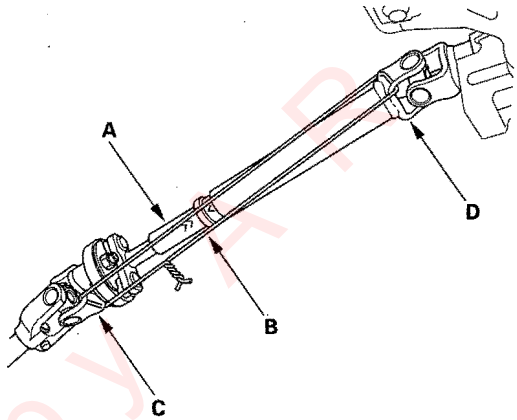

9. Release the tilt/telescopic lever, and adjust the steering column to the full telescopic out position, then tighten the tilt/telescopic lever.

Protected by AP

10. Disconnect the wire harness connectors from the combination switch assembly (A).

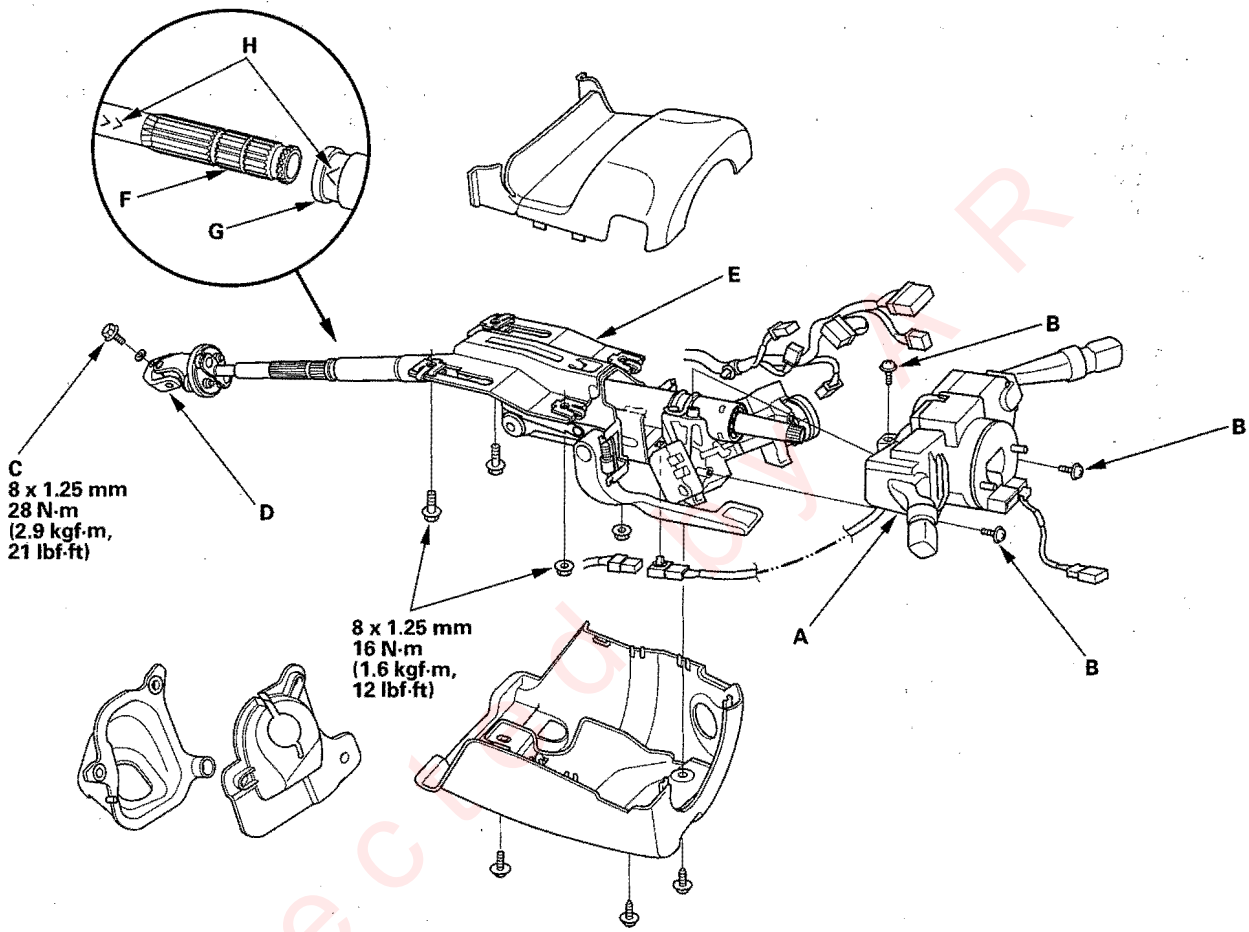

11. Remove the combination switch assembly from the steering column shaft by removing the screws (B).

12. Disconnect the connectors from the ignition switch, and release the wire harness clips from the steering column.

13. Remove the steering joint bolt (C), then disconnect the steering joint (D) from the pinion shaft.

14. Remove the steering column (E) by removing the attaching nuts and bolts. If the lower slide shaft (F) is removed, slip it into the upper shaft (G) by aligning the marks (H).

Protected by R

(cont'd)

Steering Column Removal and Installation (cont'd)

Installation

1. Install the steering column in the reverse order of removal, and note these items:

   - Make sure the wires are not caught or pinched by any parts.
   - Take care not to let the sliding capsules fall out of position during column installation.

2. Steering joint connection; center the steering rack within its stroke.

3. Install the steering joint (A) aligning the slit (B) of the steering joint with the tab (C) of the center guide. Position the angle of the center guide as shown if necessary.

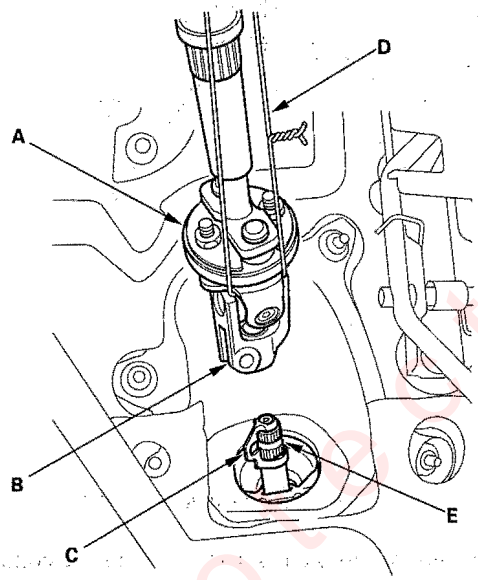

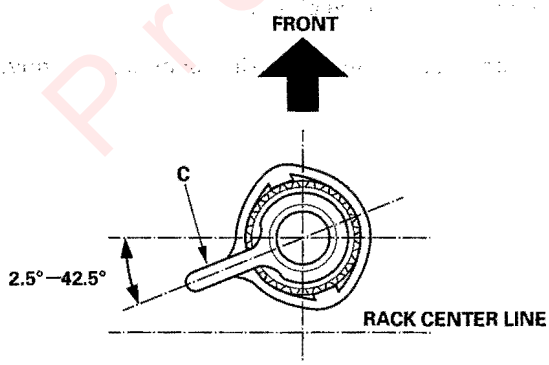

4. With the rack in the straight ahead driving position, cut the wire (D) and slip the lower end of the steering joint on to the pinion shaft (E).

5. Align the bolt hole (A) on the steering joint with the groove (B) around the pinion shaft, and loosely install the joint bolt (C). Be sure that the joint bolt is securely in the groove in the pinion shaft. Pull on the steering joint to make sure that the steering joint is fully seated. Tighten the steering joint bolt to the specified torque.

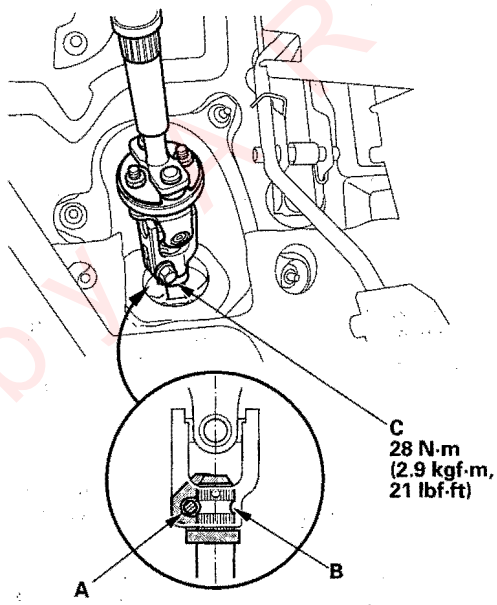

6. Finish the installation, and note these items:

   - Make sure the connectors are properly connected.
   - Reinstall the steering wheel (see page 17-23).
   - Reconnect the battery.
   - Enter the anti-theft codes for the radio and the navigation system, then the customer's XM radio channel presets.
   - Set the clock (without navigation).
   - Verify cruise control, audio remote, navigation voice control, HFL, and turn signal switch operation.
   - Make sure the steering wheel is centered.

Protected by

Steering Column/Tilt/Telescopic Inspection

- Check the steering column ball bearing (A) and the steering joint bearings (B) for play and proper movement. If any bearing is noisy or has excessive play, replace the steering column as an assembly.
- Check the lower slide shaft (C) for smooth movement in and out. If the lower slide shaft is removed, slip it into the upper shaft by aligning the marks (D). If it sticks or binds, replace the steering column as an assembly.
- Check the sliding capsules (E) for distortion or breakage. If there is distortion or breakage, replace the steering column as an assembly.
- Check the tilt mechanism and telescopic mechanism for movement and damage.

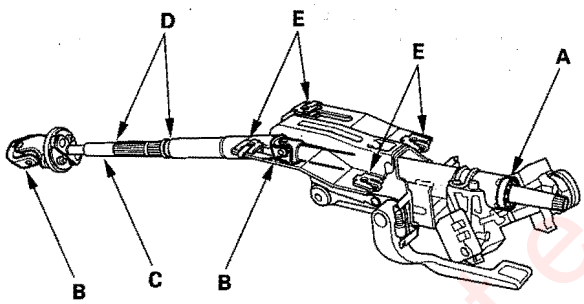

Steering Lock Replacement

1. Remove the steering column (see page 17-24).
2. Center-punch each of the two shear bolts, and drill their heads off with a 5 mm (3/16 in.) drill bit. Be careful not to damage the switch body when removing the shear bolts.

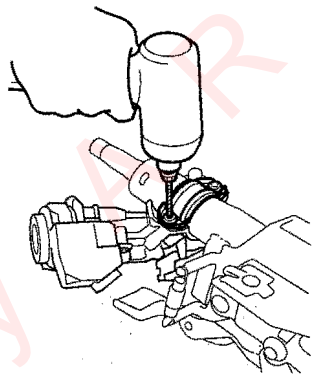

3. Remove the shear bolts from the switch body.
4. Install the switch body without the key inserted.
5. Loosely tighten the new shear bolts.
6. Insert the ignition key, and check for proper operation of the steering wheel lock and that the ignition key turns freely.
7. Tighten the shear bolts (A) until the hex heads (B) twist off.

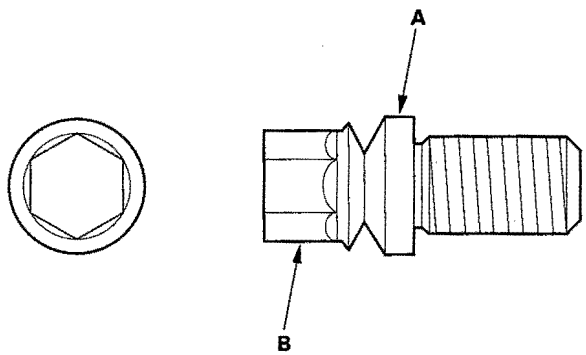

Protected by AR

Rack Guide Adjustment

Special Tools Required
Locknut wrench, 40 mm 07916-SA50001

1. Set the wheels in the straight ahead position.
2. Loosen the rack guide screw locknut (A) with the special tool, then remove the rack guide screw (B).

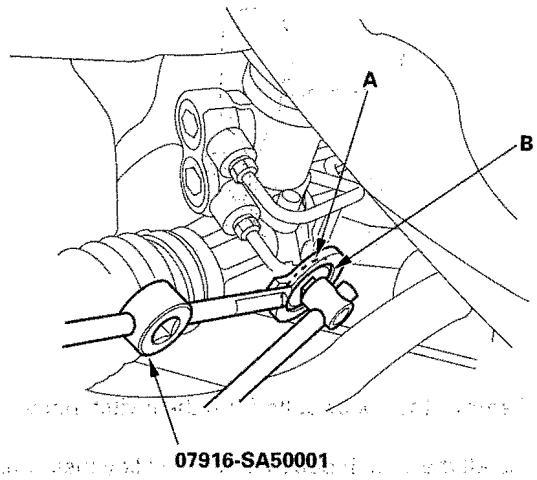

3. Remove the old sealant from the rack guide screw (A), and apply new sealant (Three Bond 1215 or Loctite 5699) to the middle of the threads (B). Loosely install the rack guide screw on the steering gearbox.

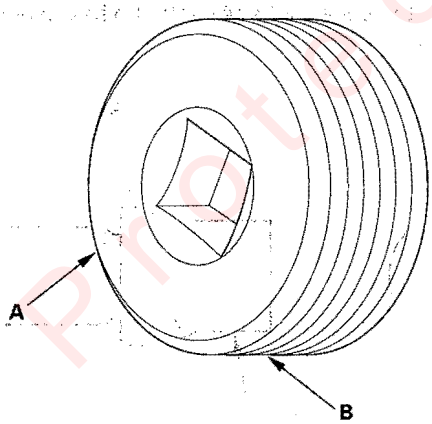

4. Tighten the rack guide screw (A) to 25 N·m (2.5 kgf·m, 18 lbf·ft), then loosen it.

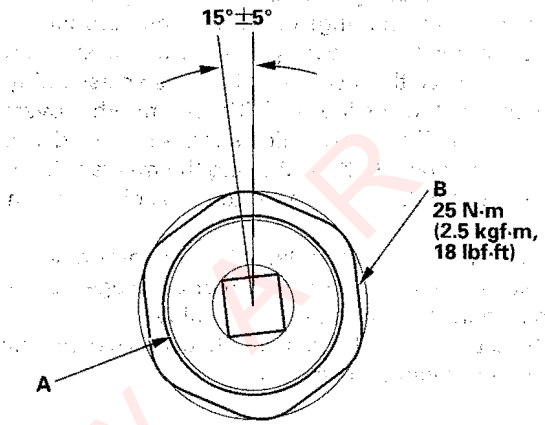

5. Retighten the rack guide screw to 3.9 N·m (0.4 kgf·m, 4 lbf·ft), then back it off to the specified angle.

   Specified return angle: 15°±5°

6. Hold the rack guide screw stationary with a wrench, and tighten the locknut by hand until it's fully seated.
7. Install the special tool on the locknut (B), and hold the rack guide screw stationary with a wrench. Tighten the locknut an additional 30° with the special tool.
8. Check for unusual steering effort through the complete turning range.
9. Check the steering wheel rotation play (see page 17-7) and the power assist (see page 17-7).

Protected by AR

Steering Gearbox Removal

Special Tools Required
- Ball joint remover, 28 mm 07MAC-SL00200
- Subframe adapter EQS02C000016 *

* Available through the Honda Tool and Equipment program 888-424-6857

Note these items during removal:
- Using solvent and a brush, wash any oil and dirt off the valve body unit, its lines, and the end of the gearbox. Blow dry with compressed air.
- Make sure to remove the steering wheel before disconnecting the steering joint. Damage to the cable reel can occur.

1. Remove the right side engine component cover (A), right rear engine component cover (B) and left rear engine component cover (C).

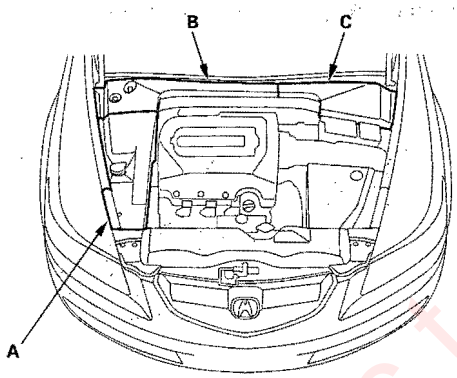

2. Drain the power steering fluid (see step 1 on page 17-12).

3. Raise the front of vehicle, and support it with safety stands in the proper locations (see page 1-7).

4. Remove the front wheels, taking care not to scratch the calipers on M/T model.

5. Remove the steering wheel (see page 17-21).

6. Remove the steering joint cover A.

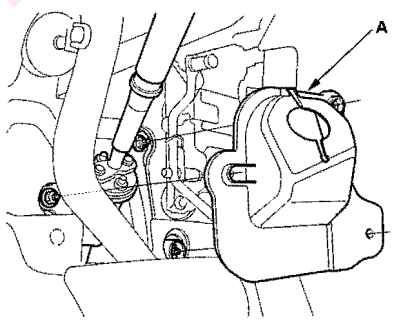

7. Remove the steering joint bolt (A), and disconnect the steering joint by moving the steering joint (B) toward the column. Hold the slider shaft (C) on the column with a piece of wire (D) between the joint yoke (E) on the slider shaft to the joint yoke on the upper shaft (see page 17-24).

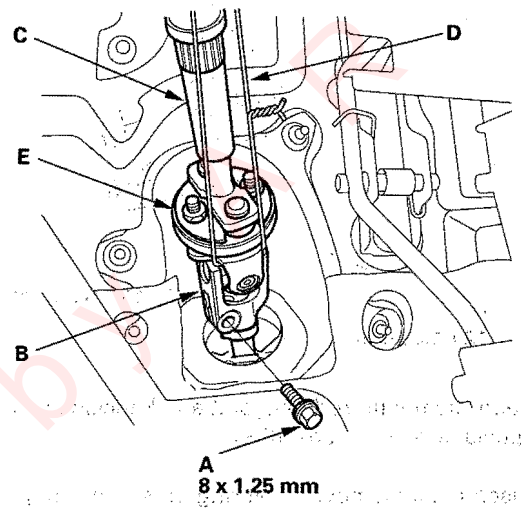

8. Remove the center guide (A), and discard it.

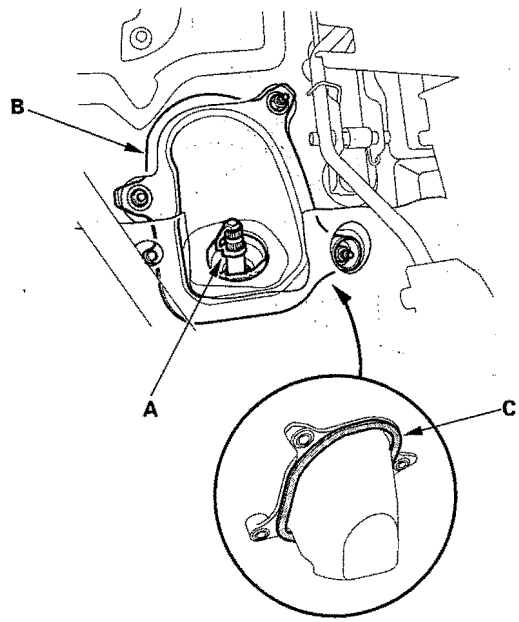

9. Remove the steering joint cover B. Be careful not to damage the mating surface on the joint cover B and pinion shaft grommet. Replace the cover seal (C) if necessary.

(cont'd)

Steering Gearbox Removal (cont'd)

10. Remove and discard the cotter pin (A) from the tie-rod ball joint nut (B), and loosen the nut.

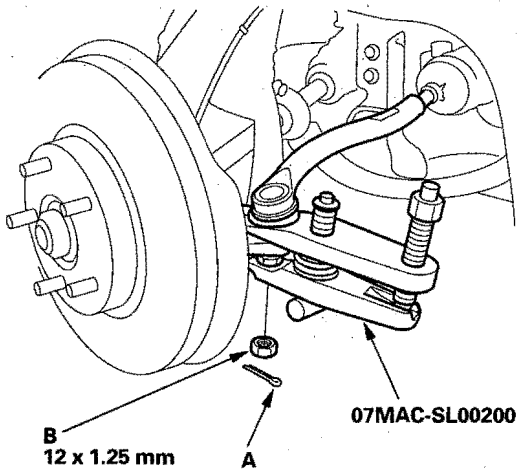

11. Separate the tie-rod ball joint and knuckle using the special tool (see page 18-9).

12. Disconnect the power steering pressure (PSP) switch connector (A).

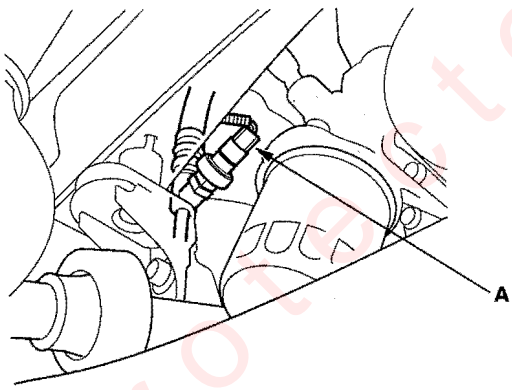

13. Remove the splash shield (A).

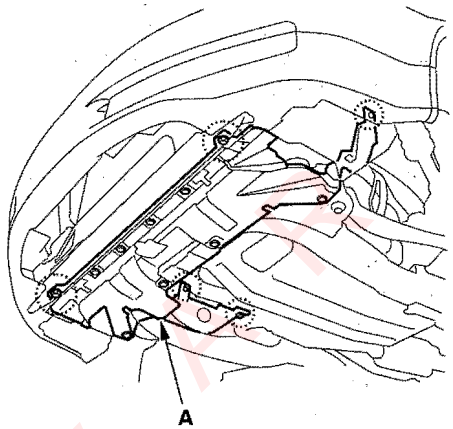

14. Remove the engine under cover (A).

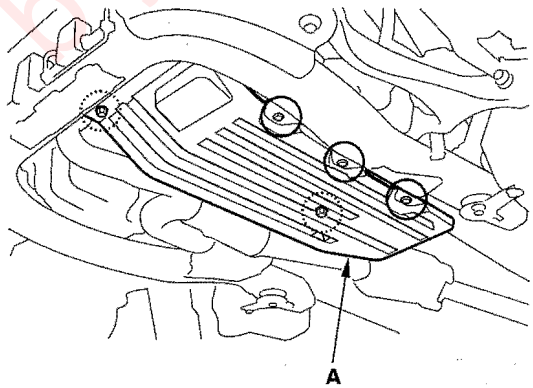

Protected by ATN

15. Attach the special tool to the front suspension subframe (A) by hanging the hook of the special tool over the front of the subframe, then tighten the special tool screw.

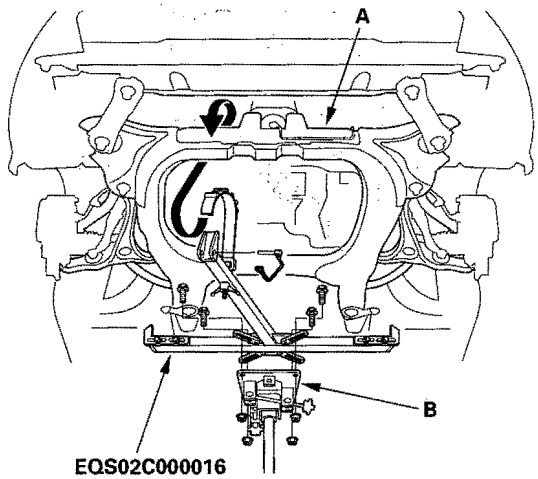

16. Raise the jack (B) and line up the slots in the arms with the bolt holes on the corner of the jack base, then attach them with bolts securely.

17. Remove the front suspension subframe right middle mounting bolts (A).

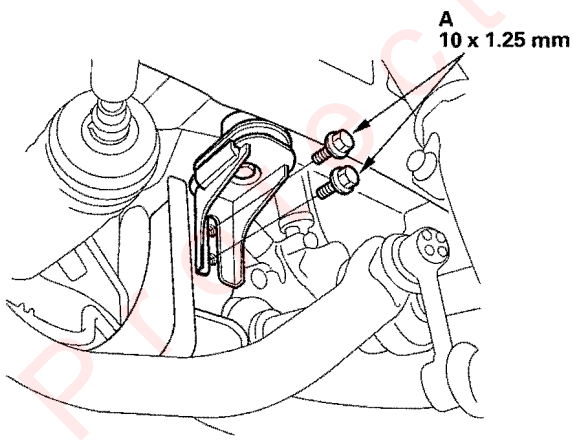

18. Remove the front suspension subframe left middle mounting (A).

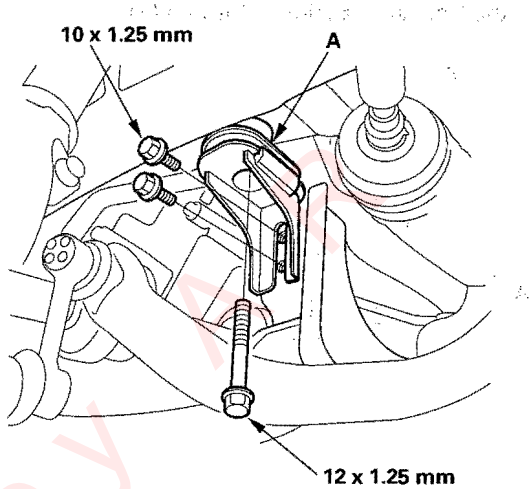

19. Loosen the front suspension subframe front bracket (A) mounting bolts on the right and left of the vehicle so they are about 30 mm (1 3/16 in.) from the mounting surface.

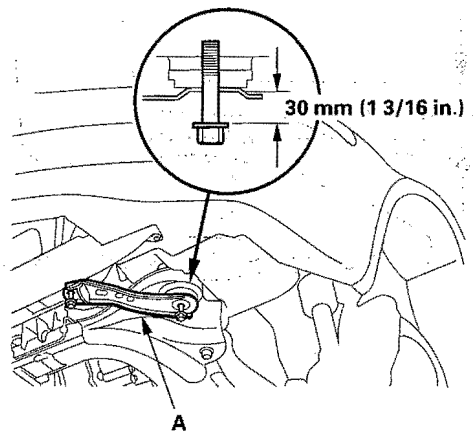

(cont'd)

Protected by AP

Steering Gearbox Removal (cont'd)

20. Remove the front suspension subframe rear bracket (A) on the right and left of the vehicle from the front suspension subframe (B).

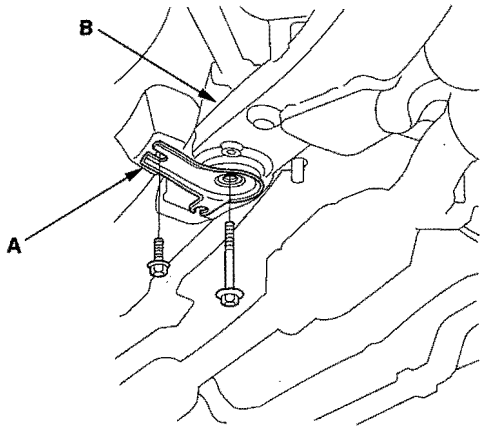

21. Lower the jack supporting the front suspension subframe (A) with the special tool slowly until the front suspension subframe has dropped about 50 mm (1 15/16 in.).

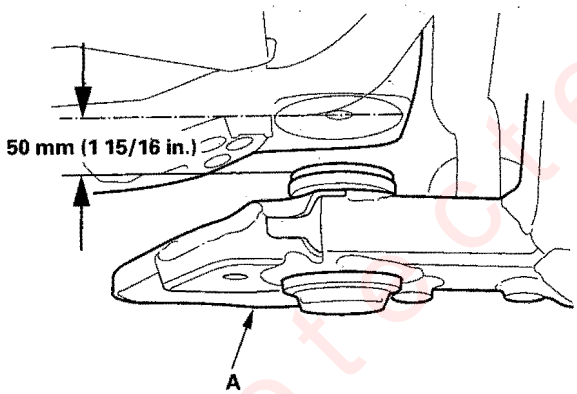

22. Remove the P/S heat baffle plate (A).

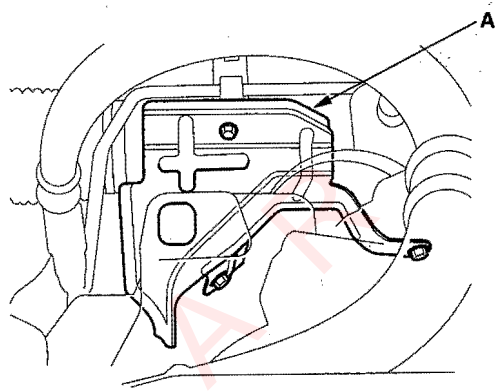

Protected by AT

23. Remove the feed line holder mounting bolt (A) on the front suspension subframe.

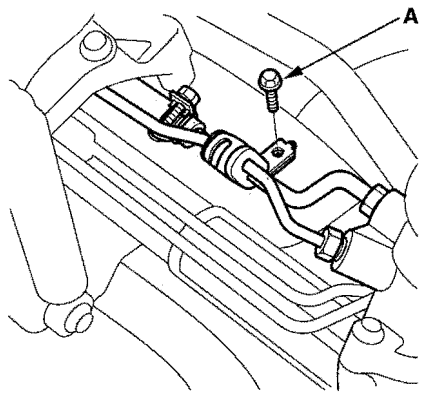

24. Remove the feed line holder mounting bolt (A) and return hose (B) from the gearbox mounting bracket (C).

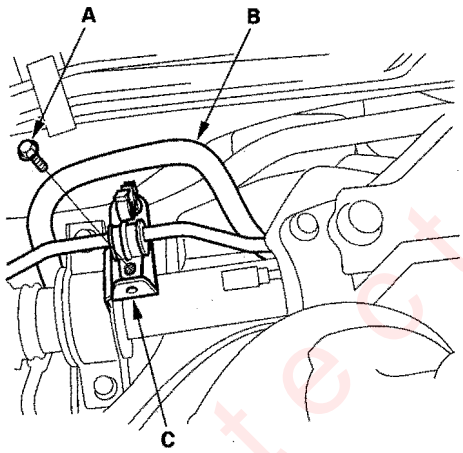

25. Place several shop towels under the line connections, and cover the gearbox mounting part to protect it from the power steering fluid. Loosen the flare nut (A), and disconnect the feed line (B).

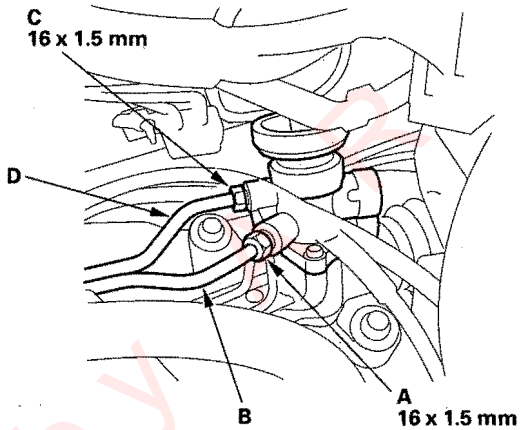

26. Loosen the flare nut (C), and disconnect the return line (D).

27. After disconnecting the lines, plug or seal them with a piece of tape or equivalent to prevent foreign materials from entering.

NOTE: Do not loosen the cylinder line A and B between the valve body unit and the cylinder.

(cont'd)

Protected by

Steering Gearbox Removal (cont'd)

28. Remove the steering gearbox mounting bolts (A) and washers (B) on the left gearbox mount.

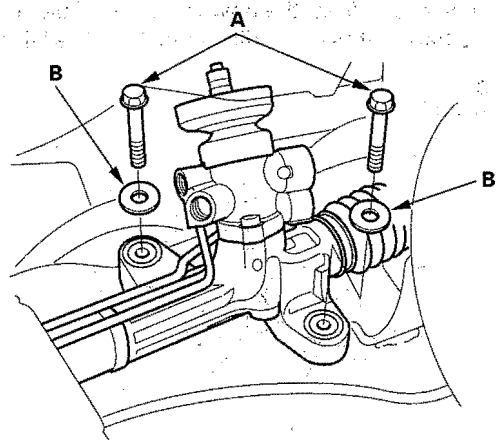

29. Remove the two flange bolts from the right side of the gearbox, then remove the gearbox mounting bracket (A) and cushion (B).

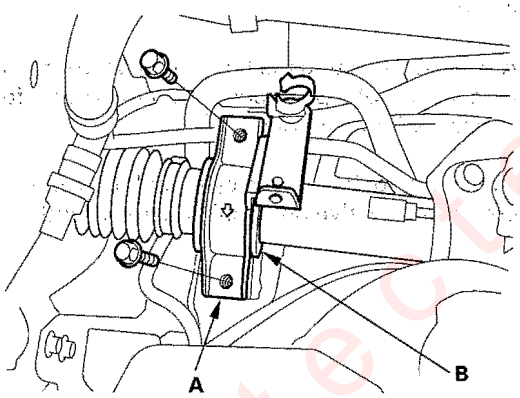

30. Move the steering gearbox toward the front, and remove the pinion shaft grommet (A) from the top of the valve body unit.

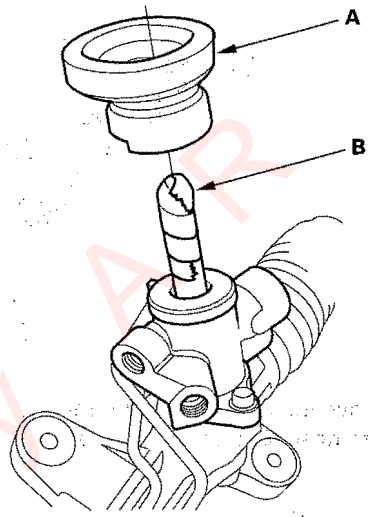

31. Apply vinyl tape (B) to the splines on the pinion shaft.

32. Apply vinyl tape or equivalent material (A) to brake lines (B) to protect if from the pinion shaft.

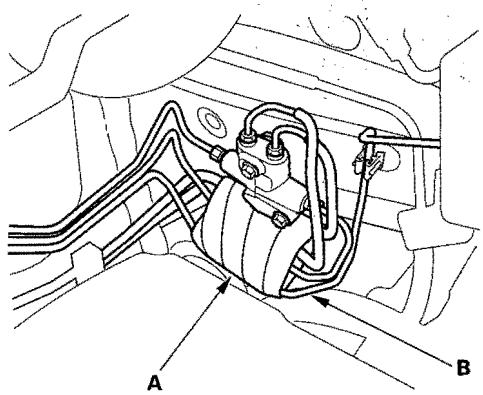

Protected by AR

33. Move the steering gearbox to the driver's side, and rotate it so the pinion shaft points toward the front of the vehicle.

34. Carefully move the steering gearbox as an assembly toward the left side of the vehicle until the pinion shaft clears the wheelwell opening. Be careful not to damage the brake lines with the pinion shaft.

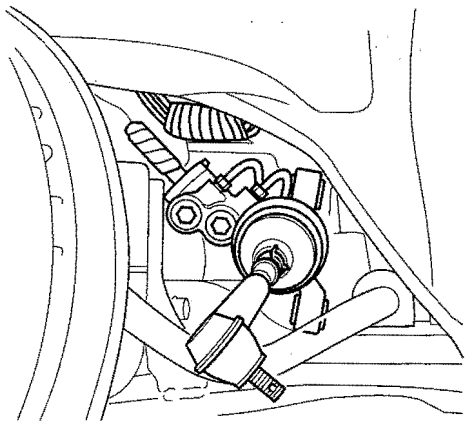

35. Remove the steering gearbox through the wheelwell opening on the driver's side.

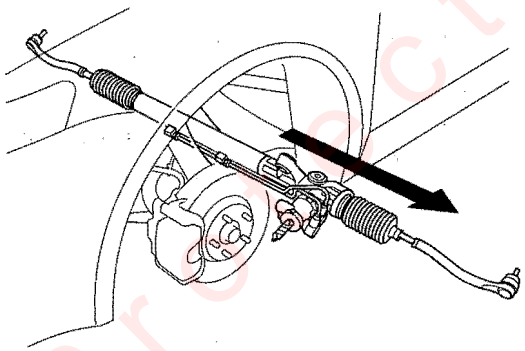

36. After removing the steering gearbox, make sure that no power steering fluid gets on the gearbox mount cushions, gearbox housing, surface of the front suspension subframe and stiffener. Wipe off any spilled fluid at once.

Protected by AR

Steering Gearbox Overhaul

Exploded View

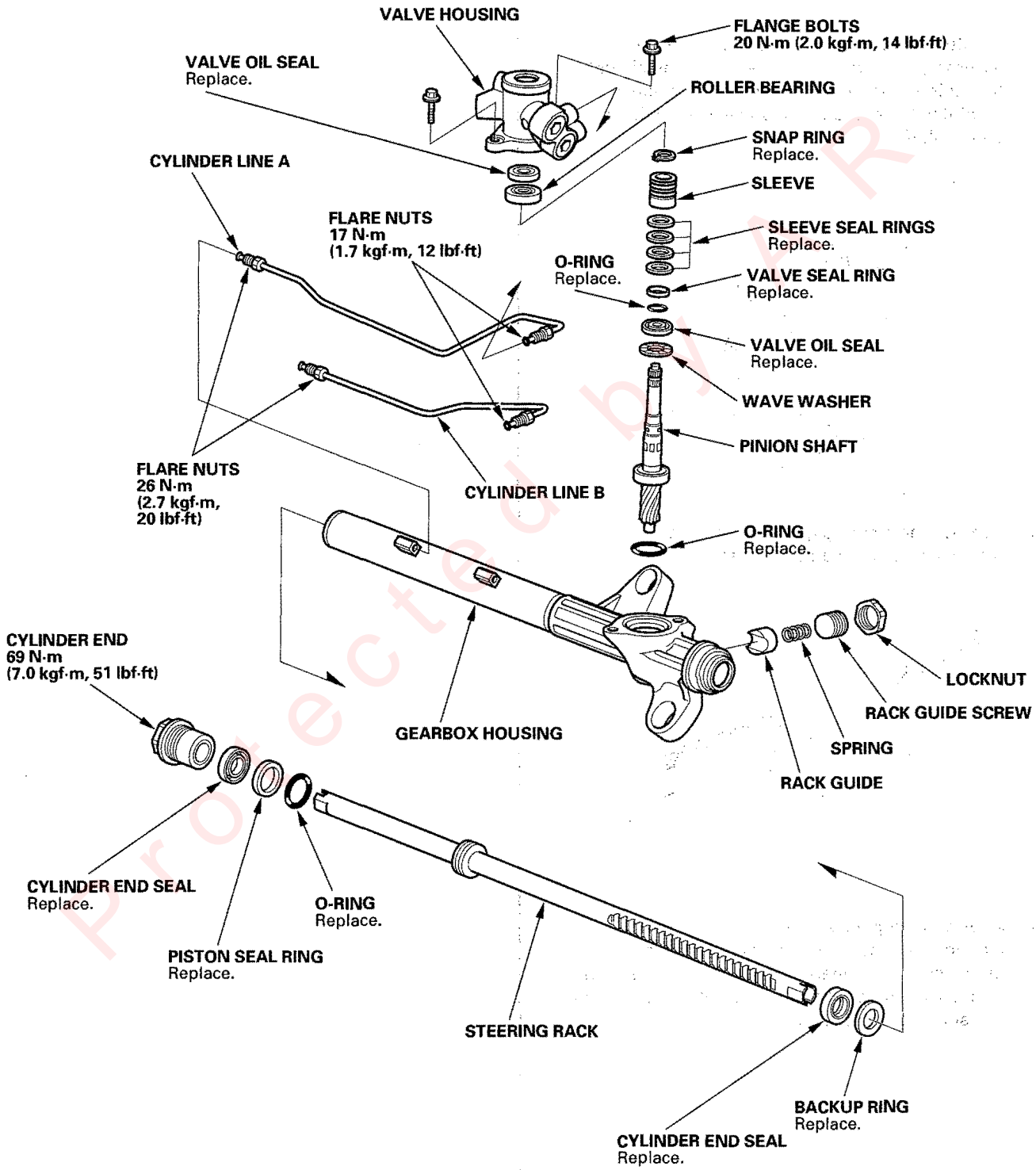

Protected by AR

Special Tools Required

- Cylinder end seal remover attachment 07NAD-SR3020A
- Pilot collar 07GAF-PH70100
- Valve seal ring sizing tool 07NAG-SR3090A
- Ball joint boot clip guide 07974-SA50800
- Sleeve seal ring sizing tool 07974-SA5020A or 07974-SA50200
- Attachment, 32 x 35 mm 07746-0010100
- Driver 07749-0010000
- Piston seal ring guide 07HAG-SF10100
- Piston seal ring sizing tool 07HAG-SF1020A or 07HAG-SF10200
- Cylinder end seal slider 07ZAG-S5A0300
- Pincers Oetiker 1098 or equivalent, commercially available.

NOTE: Refer to the Exploded View as needed during this procedure.

Removal

1. Remove the steering gearbox (see page 17-29).

Disassembly

2. Remove the boot bands (A) and tie-rod clips (B). Pull the boot away from the ends of the steering gearbox.

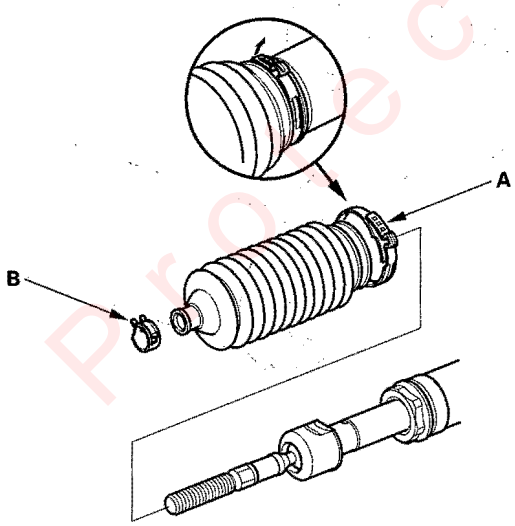

3. Unbend the lock washers (A).

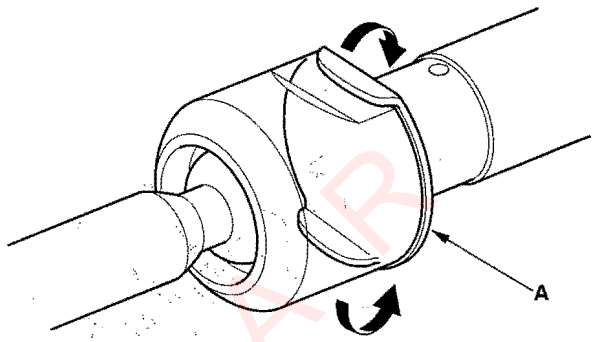

4. Hold the flat surface sections (A) of the steering rack with a wrench (B), and unscrew both rack ends (C) with another wrench (D). Be careful not to damage the rack surface with the wrench.

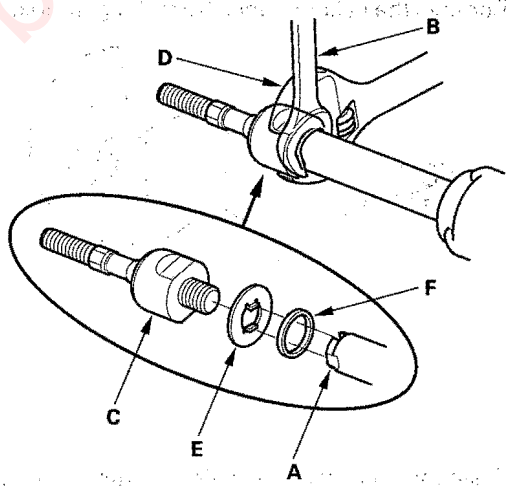

5. Remove the lock washer (E) and stop rubber (F).

(cont'd)

Steering Gearbox Overhaul (cont'd)

6. Loosen the locknut (A), then remove the rack guide screw (B).

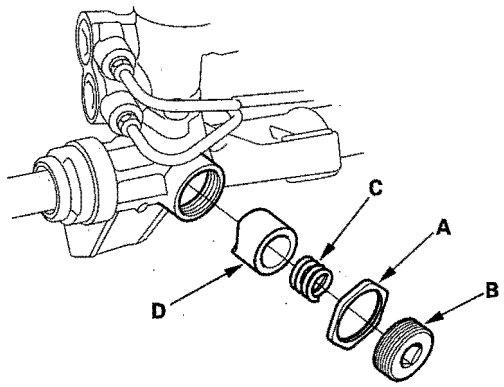

7. Remove the spring (C) and the rack guide (D) from the gearbox housing.

8. Remove the cylinder lines from the gearbox.

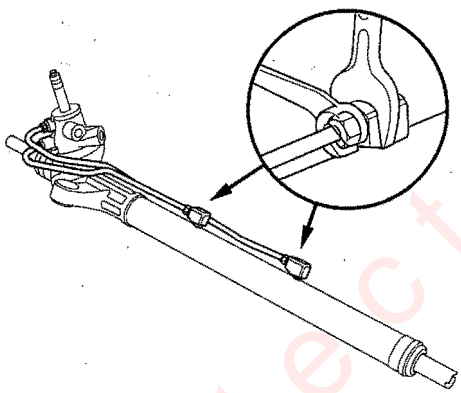

9. Drain the fluid from the cylinder fittings by slowly moving the steering rack back and forth.

10. Remove the two flange bolts, then remove the valve body unit (A) from the gearbox (B). Remove the O-ring (C), and discard it.

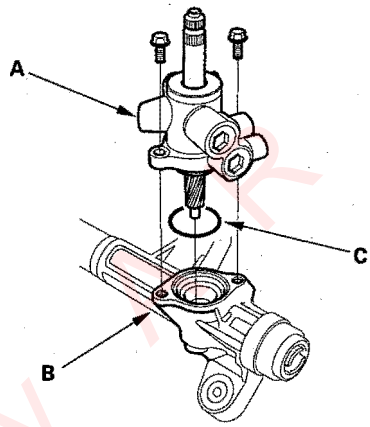

11. Drill a 3 mm (0.12 in.) diameter hole about 2.5—3.0 mm (0.10—0.12 in.) in depth in the staked point (A) on the cylinder. Do not allow metal shavings to enter the cylinder housing. After removing the cylinder end (B), remove any burrs at the staked point.

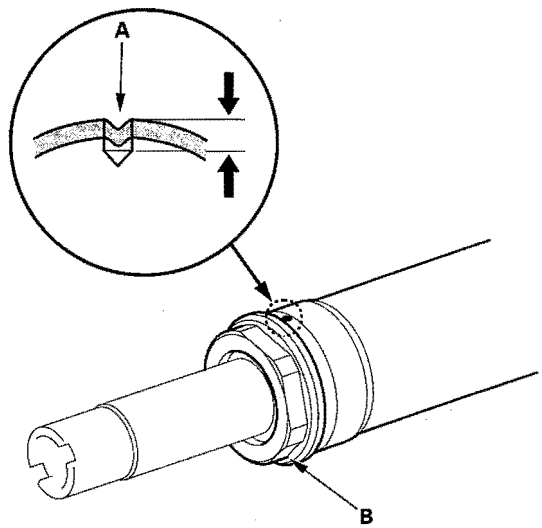

Protected by

12. Hold the gearbox housing using a C-clamp (commercially available) (A) and the wooden blocks (B) as shown. Do not clamp the cylinder part of the gearbox housing in the vise. Then remove the cylinder end (C).

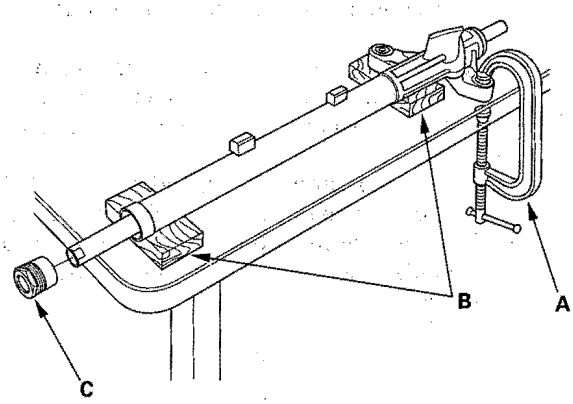

13. Install a commercially available bearing separator (A) in the gearbox housing as shown.

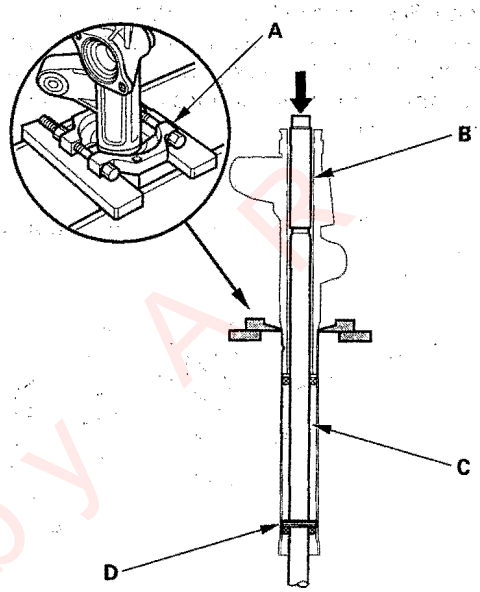

14. Place an appropriate size deep socket wrench (B) on the steering rack (C).

15. Set the steering gearbox in a press so the gearbox housing side points upward, then press the cylinder end seal (D) and steering rack out of the gearbox. Hold the steering rack to keep it from falling when pressed clear. Be careful not to damage the inner surface of the cylinder housing with the tool.

(cont'd)

Protected by AP

Steering Gearbox Overhaul (cont'd)

16. Install the special tool so it will fit through the rack guide hole of the gearbox housing. Insert a 24" long, 3/8" drive extension (A), and install it on the special tool. Make sure the special tool is securely positioned on the backup ring edges. Be careful not to damage the inner surface of the cylinder with the special tool.

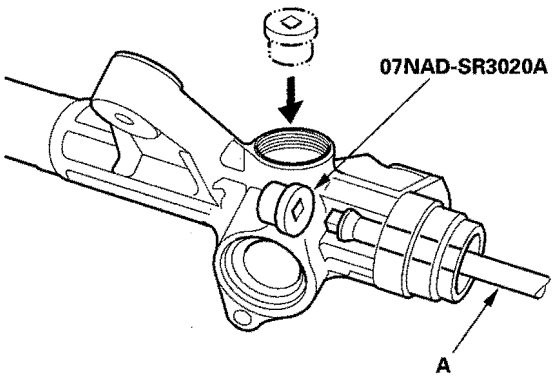

17. Place the steering gearbox in a press, then remove the cylinder end seal (A) and backup ring (B) from the gearbox by pressing on the 24" long, 3/8" drive extension.

    Note these items when pressing the cylinder end seal:
    - Keep the tool straight to avoid damaging the cylinder wall. Check the tool angle, and correct it if necessary, when removing the cylinder end seal.
    - Use a press to remove the cylinder end seal. Do not try to remove the seal by striking the tool; striking the tool could break the backup ring, and the cylinder end seal would remain in the gearbox.

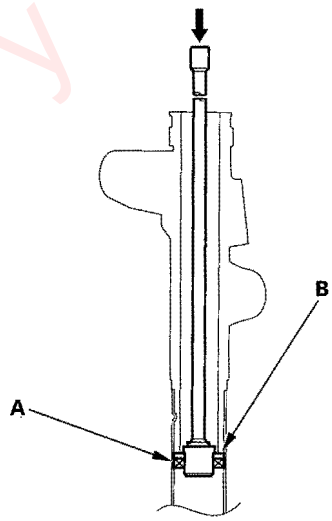

Protected by

18. Carefully pry the piston seal ring (A) and O-ring (B) off the rack piston. Be careful not to damage the inside of the seal ring groove and piston edges when removing the seal ring.

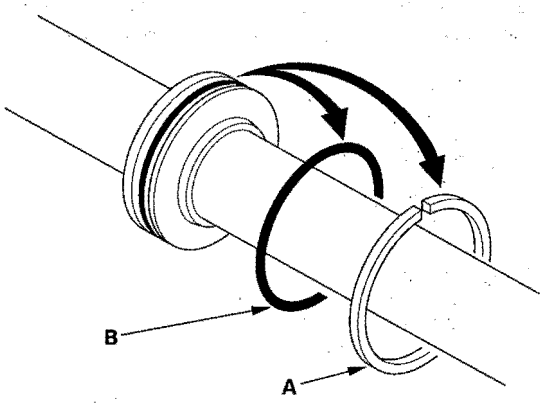

19. Before removing the valve housing (A), apply vinyl tape (B) to the splines on the pinion shaft.

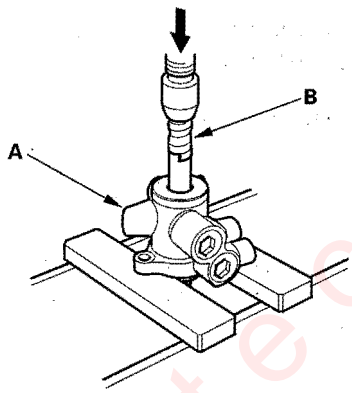

20. Separate the valve housing from the pinion shaft/valve using a press.

21. With your finger, check the inner wall of the valve housing where the seal ring slides. If there is a step in the wall, the housing is worn. Replace it.

NOTE: There may be sliding marks from the seal ring on the wall of the valve housing. Replace the valve housing only if the wall is stepped.

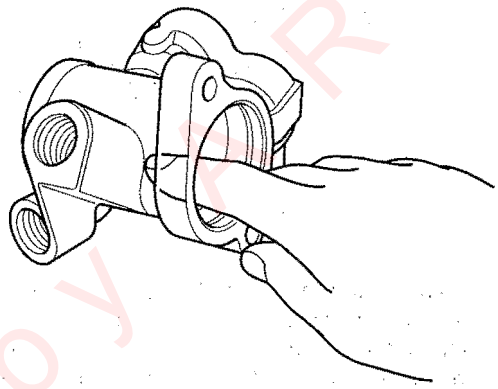

22. Check for wear, burrs, and other damage to the edges of the grooves in the sleeve.

NOTE: The pinion shaft and sleeve are a precision matched set. If either the pinion shaft or sleeve must be replaced, replace both parts as a set.

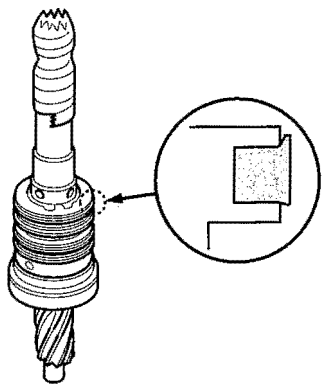

(cont'd)

Protected by MR

Steering Gearbox Overhaul (cont'd)

23. Remove the snap ring (A) and sleeve (B) from the pinion shaft.

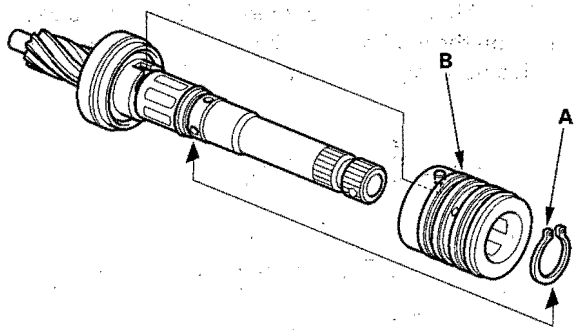

24. Using a cutter or an equivalent tool, cut and remove the four seal rings from the sleeve. Be careful not to damage the edges of the sleeve grooves and outer surface when removing the seal rings.

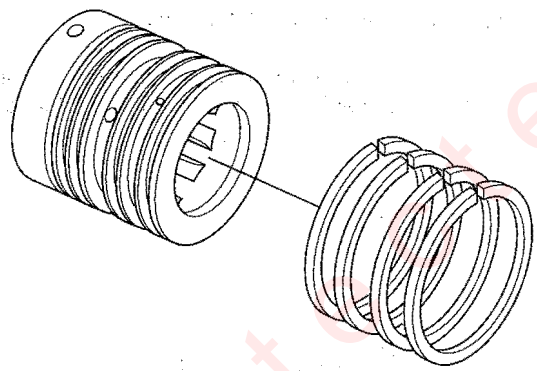

25. Using a cutter or an equivalent tool, cut the valve seal ring (A) and O-ring (B) at the cutting groove position (C) in the pinion shaft. Remove the valve seal ring and O-ring. Be careful not to damage the edges of the pinion shaft groove and outer surface when removing the valve seal ring and O-ring.

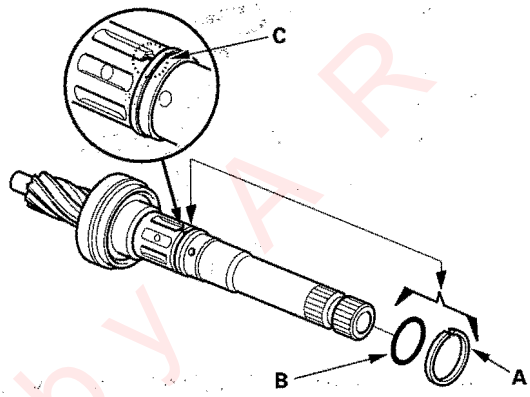

26. Remove the valve oil seal (A) and wave washer (B) from the pinion shaft.

Note these items during disassembly:
- Inspect the ball bearing (C) by rotating the outer race slowly. If there is any excessive play or wear, replace the pinion shaft and sleeve as an assembly.
- The pinion shaft and sleeve are a precise fit; do not intermix old and new pinion shafts and sleeves.

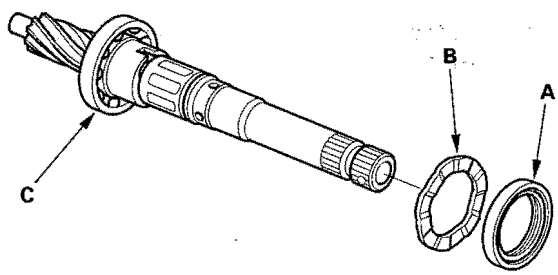

Protected by AR

27. Press the valve oil seal (A) and roller bearing (B) out of the valve housing using a hydraulic press and special tool.

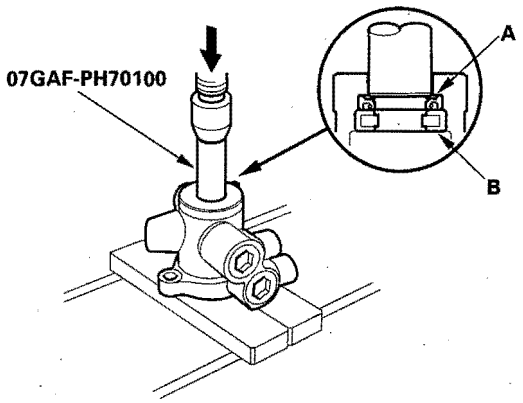

28. Clean the disassembled parts with solvent, and dry them with compressed air. Do not dip rubber parts in the solvent.

Protected by AR

(cont'd)

Steering Gearbox Overhaul (cont'd)

Reassembly

29. Apply vinyl tape (A) to the stepped portion of the pinion shaft, and coat the surface of the vinyl tape with power steering fluid.

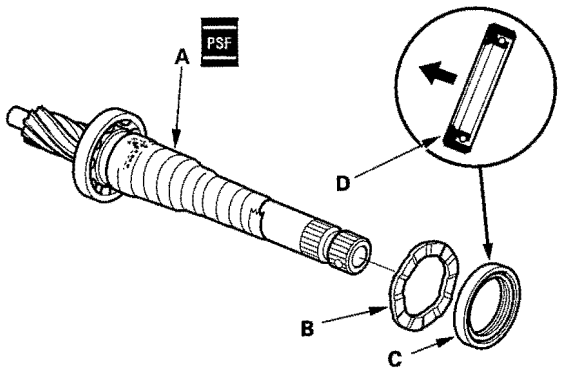

30. Install the wave washer (B).

31. Coat the inside surface of the new valve oil seal (C) with power steering fluid, and install the seal with its grooved side facing opposite the bearing, then slide it over the pinion shaft, being careful not to damage its sealing lip (D).

32. Apply vinyl tape (A) to the splines and stepped portion of the shaft, and coat the surface of the vinyl tape with power steering fluid.

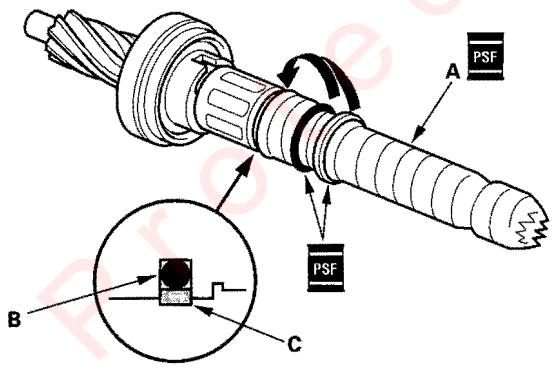

33. Fit the new O-ring (B) in the groove of the pinion shaft. Then slide the new valve seal ring (C) over the shaft and in the groove on the pinion shaft.

34. Remove the tape, and apply power steering fluid to the surface of the valve seal ring (A).

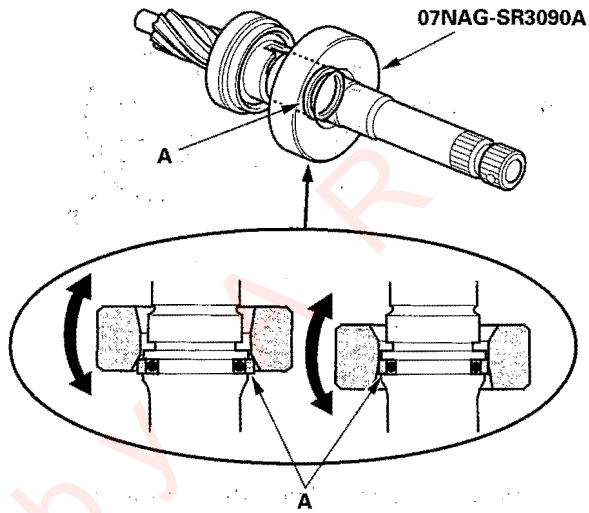

35. Apply power steering fluid to the inside of the special tool. Set the larger diameter end of the special tool over the valve seal ring, and move the special tool up and down several times to make the valve seal ring fit in the pinion shaft groove.

36. Remove the special tool, turn it over, slide the smaller diameter end over the valve seal ring. Move it up and down several times to make the valve seal ring fits snugly in the pinion shaft groove.

Protected by 1R

37. Apply power steering fluid to the surface of the special tool. Slip two new seal rings (A) over the special tool from the smaller diameter end, and expand them. Install only two rings at a time from each end of the pinion shaft sleeve (B).

    Note these items when installing the seal ring:
    - Do not over-expand the seal ring. Install the resin seal rings with care so as not to damage them. After installation, make sure you contract the seal rings using the special tool (sizing tool).
    - There are two types of sleeve seal rings: black and brown. Do not mix the different types of rings as they are not compatible.

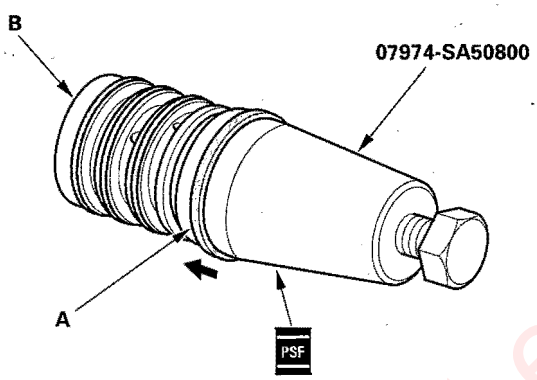

38. Align the special tool with each groove in the sleeve, and slide a sleeve seal ring into each groove. After installation, compress the seal rings with your fingers temporarily.

39. Apply power steering fluid to the seal rings on the sleeve, and to the entire inside surface of the special tool, then slowly insert the sleeve into the special tool.

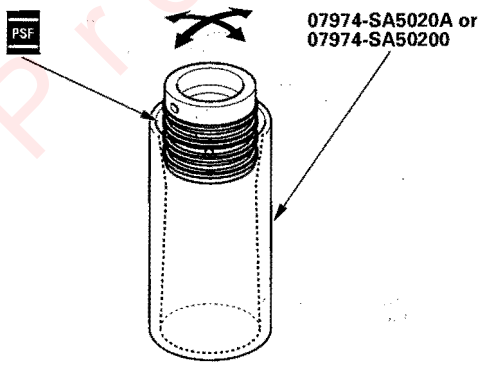

40. Move the sleeve back and forth several times to make the seal rings snugly fit in the sleeve. Make sure the seal rings are not twisted.

41. Apply power steering fluid to the surface of the pinion shaft (A). Slide the sleeve (B) onto the pinion shaft by aligning the locating pin (C) on the inside of the sleeve with the cutout (D) in the shaft. Then install the new snap ring (E) securely in the pinion shaft groove. Be careful not to damage the valve seal ring when inserting the sleeve.

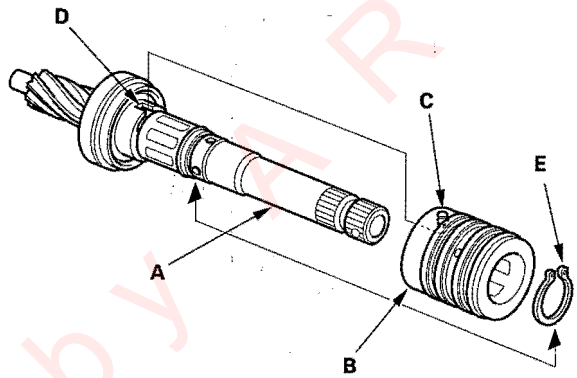

42. Apply power steering fluid to the seal ring lip of the new valve oil seal (A), then install the seal in the valve housing (B) using a hydraulic press and special tools. Install the seal with its grooved side facing the tool.

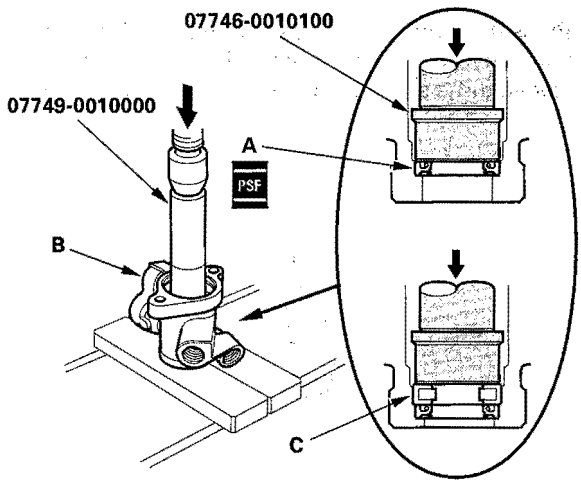

43. Press the roller bearing (C) into the valve housing with a hydraulic press and special tool.

(cont'd)

Protected by AR

Steering Gearbox Overhaul (cont'd)

44. Apply vinyl tape (A) to the pinion shaft, then coat the vinyl tape with power steering fluid.

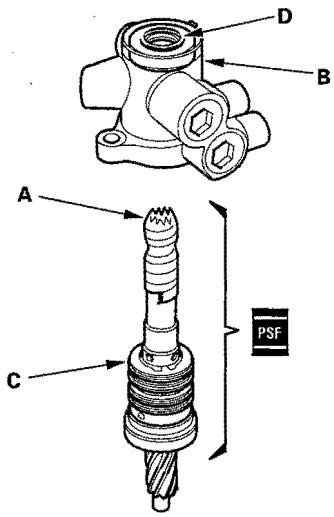

45. Insert the pinion shaft into the valve housing (B). Be careful not to damage the valve seal rings (C) and valve oil seal sealing lip (D).

46. Remove the vinyl tape from the pinion shaft, then remove any residue from the tape adhesive.

47. Press the pinion shaft/sleeve into the valve housing with a hydraulic press. Check that the pinion shaft/sleeve turns smoothly by hand after installing it.

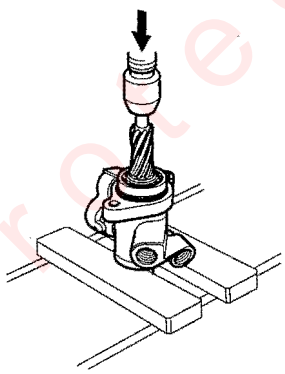

48. Coat the special tool with power steering fluid, then slide it onto the rack, big end first.

49. Position the new O-ring (A) and new piston seal ring (B) on the special tool, then slide them down toward the big end of the tool.

    Note these items during reassembly:
    - Do not over expand the resin seal rings. Install the resin seal rings with care so as not to damage them. After installation, make sure you contract the seal ring using the special tool (sizing tool).
    - Replace the piston's O-ring and seal ring as a set.

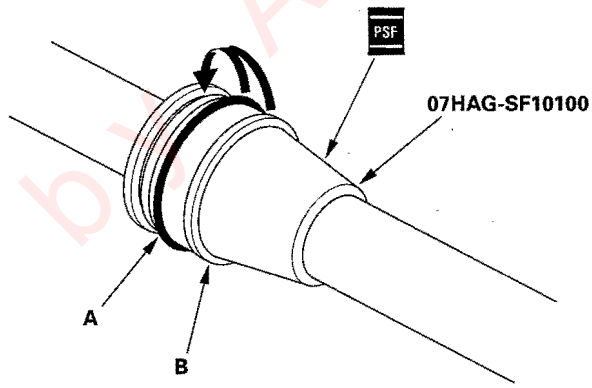

50. Pull the O-ring off into the piston groove, then pull the piston seal ring off into the piston groove on top of the O-ring.

51. Coat the piston seal ring (A) and the inside of the special tool with power steering fluid, then carefully slide the tool onto the rack and over the piston seal ring.

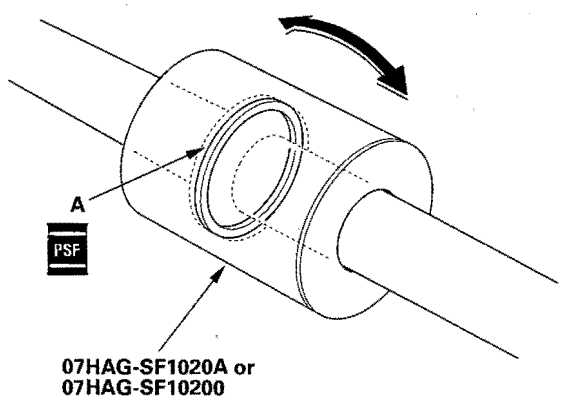

52. Move the special tool back and forth several times to make the piston seal ring fits snugly in the piston.

Protected by AR

53. Coat the sliding surface of the special tool (A) and new cylinder end seal (B) with power steering fluid. Place the seal on the special tool with its grooved side (C) facing opposite the special tool.

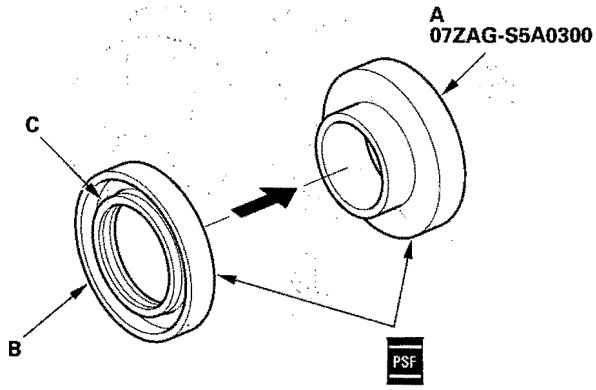

54. Coat the surface of the steering rack (A) with power steering fluid.

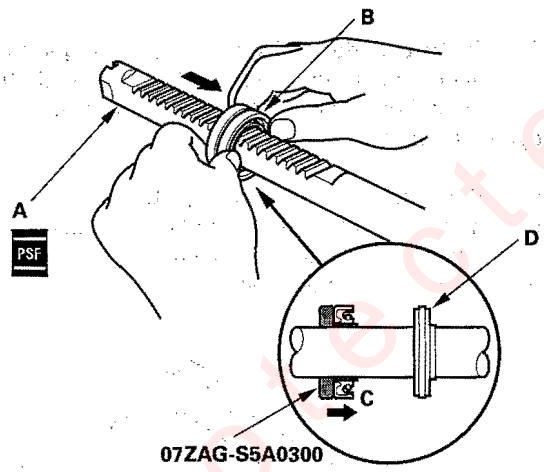

55. Install the cylinder end seal (B) onto the steering rack with its grooved side (C) toward the piston (D).

56. Separate the cylinder end seal from the special tool, then remove the special tool.

57. Install the new backup ring (A) on the steering rack, then place the backup ring and cylinder end seal (B) against the piston (C).

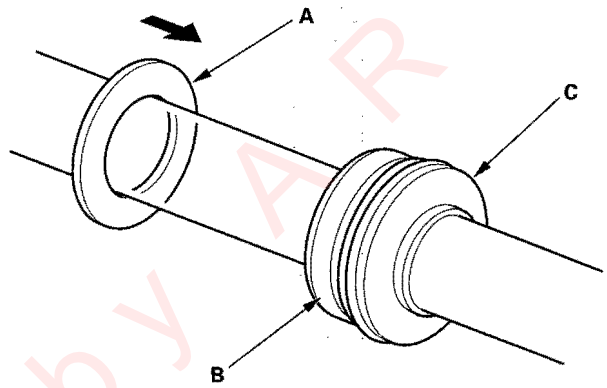

58. Apply multipurpose grease to the steering rack teeth, then insert the steering rack into the gearbox housing. Be careful not to damage the inner surface of the cylinder wall with the rack edges.

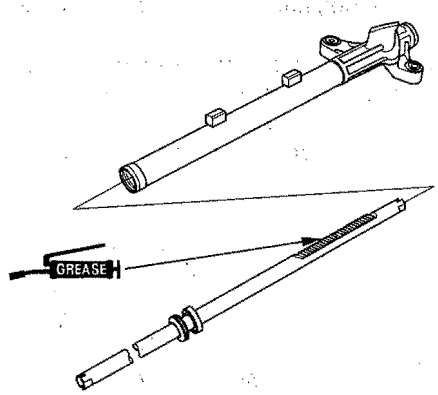

(cont'd)

Protected by AR

Steering Gearbox Overhaul (cont'd)

59. Insert an appropriate size deep socket wrench (A) onto the steering rack as shown.

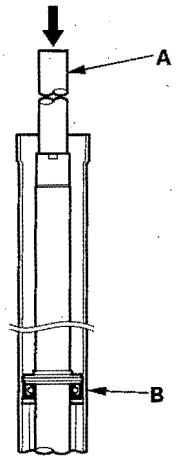

60. Install the cylinder end seal (B) into the bottom of the cylinder by pressing on the tool with a press. Do not push on the tool with excessive force as it may damage the cylinder end seal.

61. Remove the tool, and center the steering rack.

62. Coat the sliding surface of the special tool (A) and new cylinder end seal (B) with power steering fluid. Place the seal on the special tool with its grooved side (C) facing opposite the special tool.

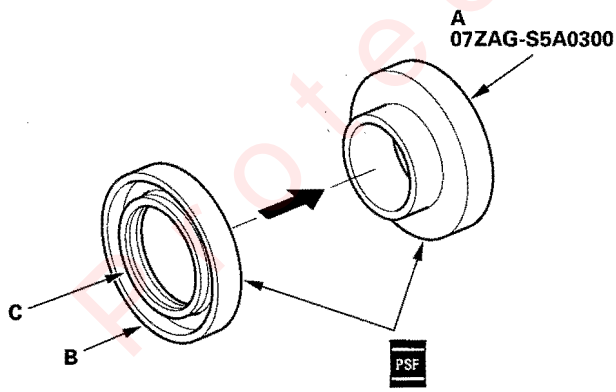

63. Coat the inside surface of the special tool and steering rack with power steering fluid, then install the cylinder end seal (A) onto the steering rack with its grooved side toward the cylinder.

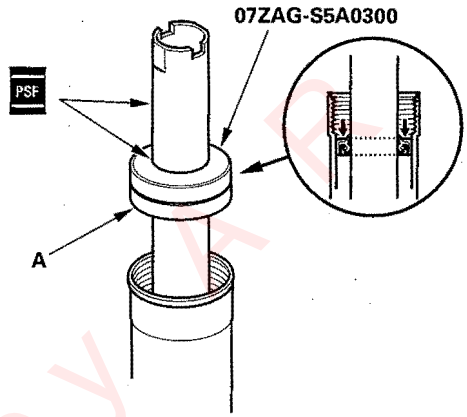

64. Separate the cylinder end seal from the special tool, then remove the special tool.

65. Push in the cylinder end seal with your finger. Be careful not to damage the face of the seal with the threads and burrs at the staked position of the cylinder housing.

66. Hold the gearbox housing using a C-clamp (commercially available) (A) and the wooden blocks (B). Do not clamp the cylinder part of the gearbox housing in the vise.

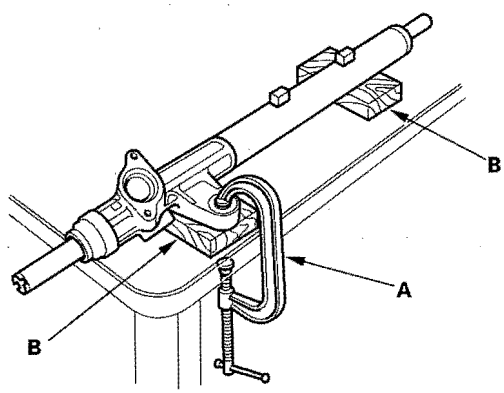

Protected by AP

67. Coat the inside surface of the cylinder end (A) with power steering fluid, then install the cylinder end by screwing it into the cylinder (B). Tighten the cylinder end to the specified torque.

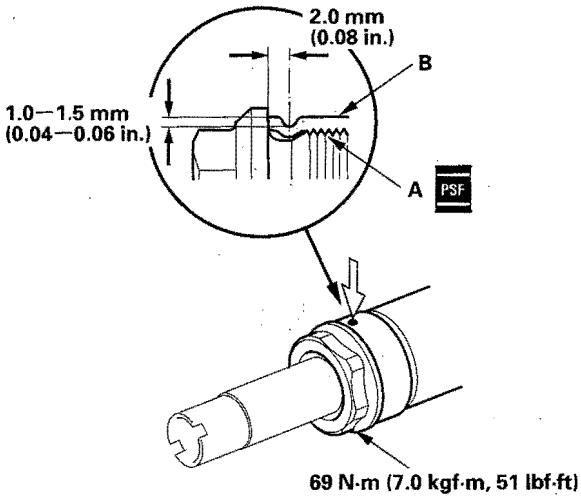

68. Stake the point of the cylinder shown (opposite from where the stake was removed during disassembly).

69. Coat the new O-ring (A) with multipurpose grease, and carefully fit it on the valve housing.

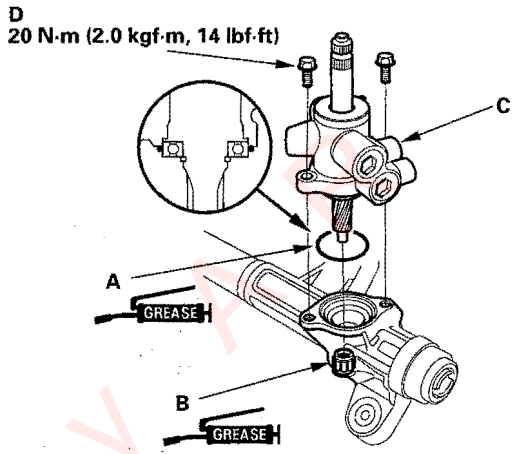

70. Apply multipurpose grease to the needle bearing (B) in the gearbox housing, then install the valve body unit (C) by engaging the gears. Note the valve body unit installation position (direction of the line connections).

71. Tighten the flange bolts (D) to the specified torque.

72. Install the cylinder lines.

Note these items during reassembly:
- Thoroughly clean the joints of the cylinder lines. The joints must be free of foreign material.
- Install the cylinder lines by tightening the flare nuts by hand first, then tighten the flare nuts to the specified torque.

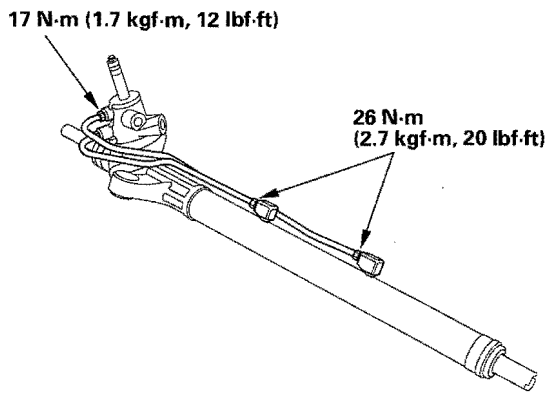

(cont'd)

Protected by A

Steering Gearbox Overhaul (cont'd)

73. Apply multipurpose grease to the sliding surface and circumference of the rack guide (A), and install it onto the gearbox housing.

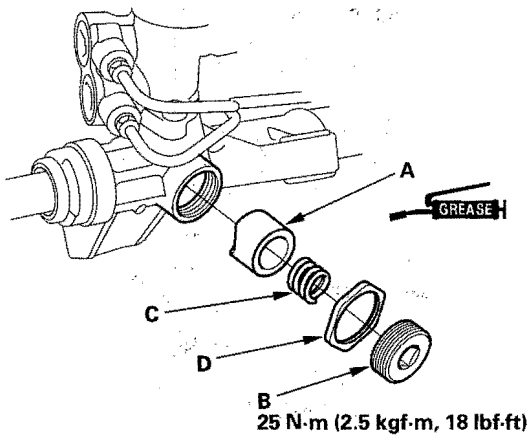

74. Apply new sealant (Three Bond 1215 or Loctite 5699) to the middle of the threads on the rack guide screw (B), then install the spring (C) and rack guide screw.

75. Tighten the rack guide screw, and loosely install the locknut (D).

76. Adjust the rack guide screw (see page 17-28). After adjusting, check that the rack moves smoothly by sliding it right and left.

77. Install a new stop rubber (A) and a new lock washer (B). Align the lock washer tabs (C) with the slots (D) on the rack end (E) while holding the lock washer in place. Repeat this step for the other side of the rack.

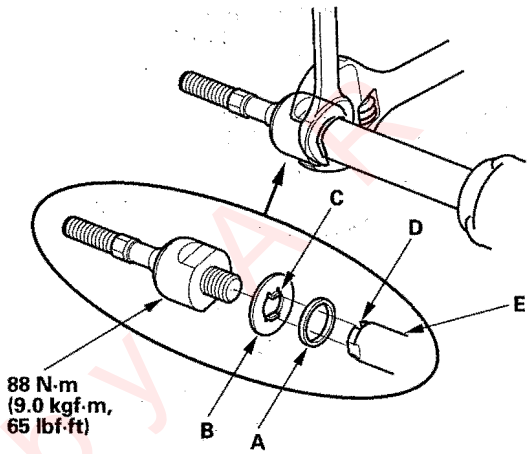

78. Hold the flat surface sections of the steering rack with a wrench, and tighten both rack ends. Be careful not to damage the rack surface with the wrench.

79. Bend the lock washers (A) back against the flat spots on the rack end joint housing.

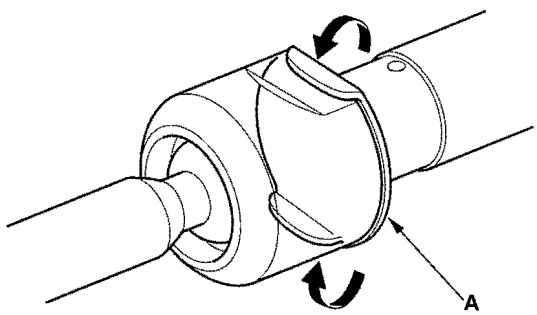

Protected by AR

80. Apply multipurpose grease to the circumference of the rack end joint housing (A).

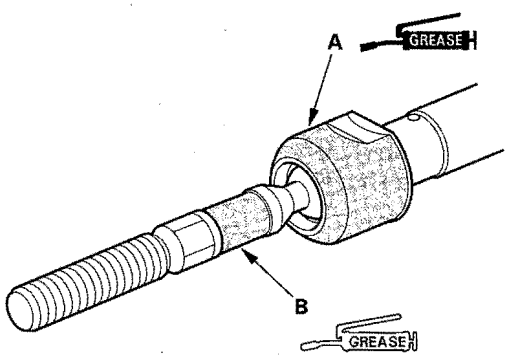

(P/N 08798-9013)

81. Apply a light coat of silicone grease to the boot grooves (B) on the rack ends.

82. Center the steering rack within its stroke.

83. Clean off any grease or contamination from the boot installation grooves (A) and around the gearbox housing. Install the boots (B) on the rack ends with the tie-rod clips (C), and fit the boot end in the installation grooves in the housing properly.

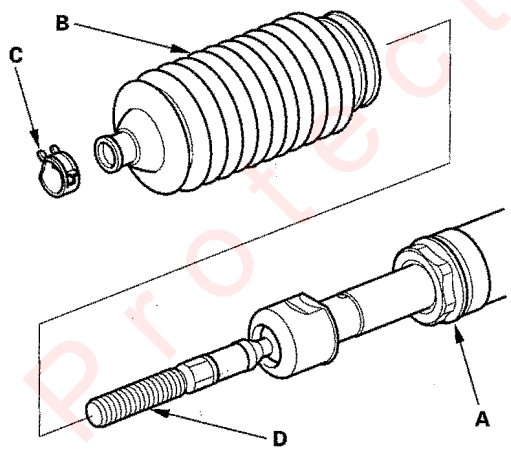

84. After installing the boots, wipe any grease off the threaded section (D) of the rack end.

85. Install the new boot bands by aligning the tabs (A) with the holes (B) of the band.

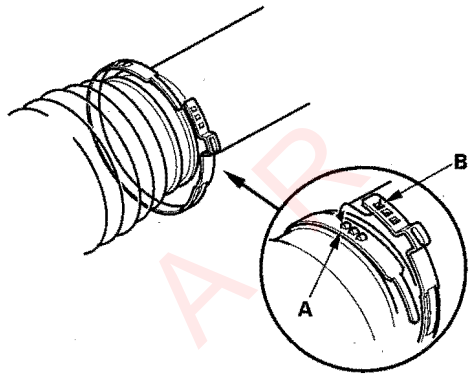

86. Close the ear portion (A) of the band (B) with commercially available pincers, Oetiker 1098 or equivalent (C).

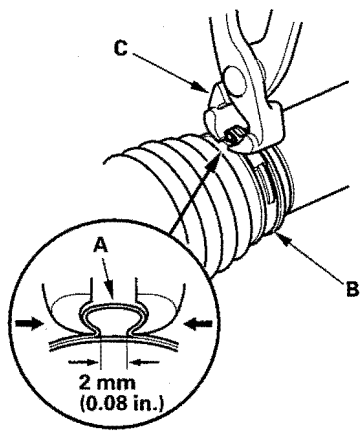

87. Slide the rack right and left to be certain that the boots are not deformed or twisted.

Protected by AR

Steering Gearbox Installation

Special Tools Required
Subframe adapter EQS02C000016 *
* Available through the Honda Tool and Equipment program 888-424-6857

1. Before installing the steering gearbox, make sure that no power steering fluid is on the mating surface of the gearbox and front suspension subframe. To prevent the gearbox mounting bolts from loosening after the installation, remove any power steering fluid from the mount cushions and bolt holes.

2. Apply a mild soap and water solution to both side of the mount cushion mating surfaces (A).

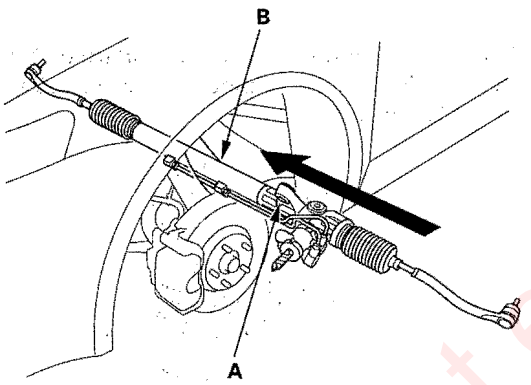

3. Pass the cylinder of the steering gearbox (B) through the wheelwell opening on the driver's side.

4. Carefully move the steering gearbox toward the passenger's side until the pinion shaft clears the wheelwell opening on the body.

5. Rotate the steering gearbox so the pinion shaft (A) points upward.

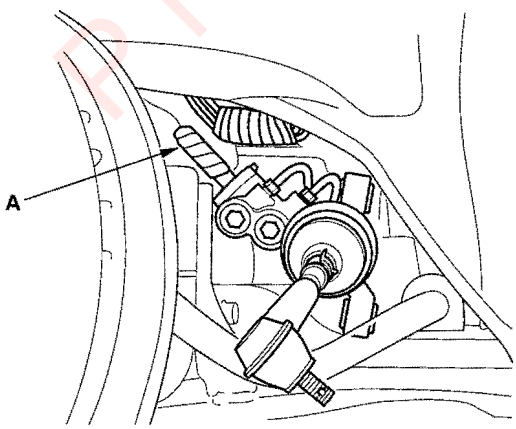

6. Continue moving the gearbox toward the passenger's side until the steering gearbox is in position. Make sure the power steering return line and feed line are routed above the gearbox.

7. Remove the vinyl tape from the pinion shaft, and install the pinion shaft grommet (A). Align the slot in the pinion shaft grommet with the lug portion (B) on the valve housing.

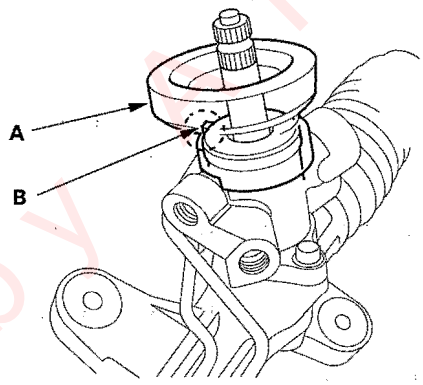

8. Position the cutout (A) on the mounting cushion (B) as shown, and install it on the cylinder of the gearbox securely.

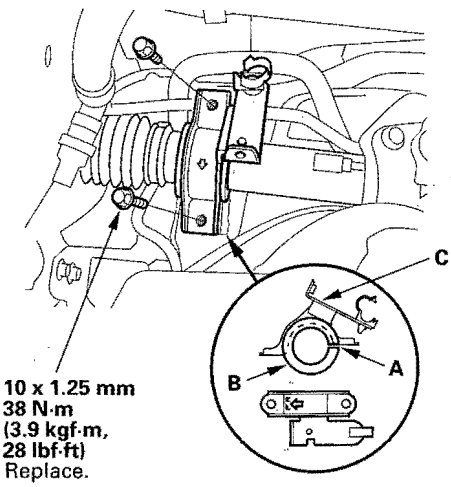

9. Install the new gearbox mounting bracket (C) over the mounting cushion, and loosely install the two flange bolts.

Protected by

10. Install the new gearbox mounting bolts (A) and washers (B) on the left side of the gearbox, then tighten them to the specified torque.

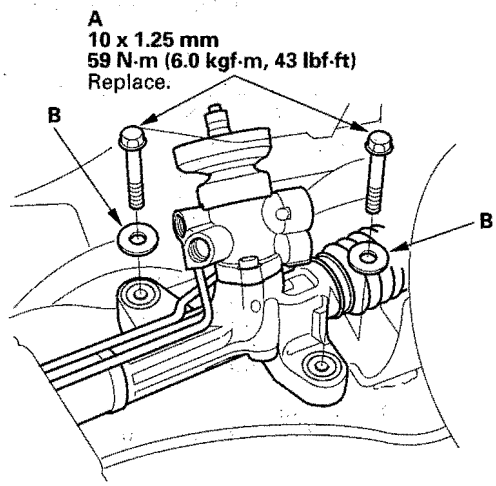

11. Tighten the flange bolts on the right side of the gearbox to the specified torque alternately in two or more steps.

12. Loosely connect the return line and feed line by hand.

13. Install the feed line holder (A) and return hose (B) on the gearbox mounting bracket (C)

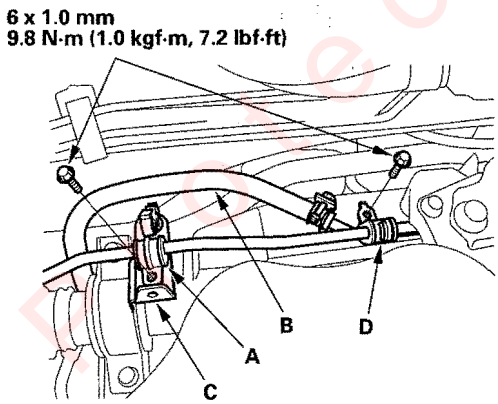

14. Install the feed line holder (D) on the front suspention subframe. Make sure that there is no interference between the feed and return lines and any other parts.

15. Tighten the return line flare nut (A) to the specified torque.

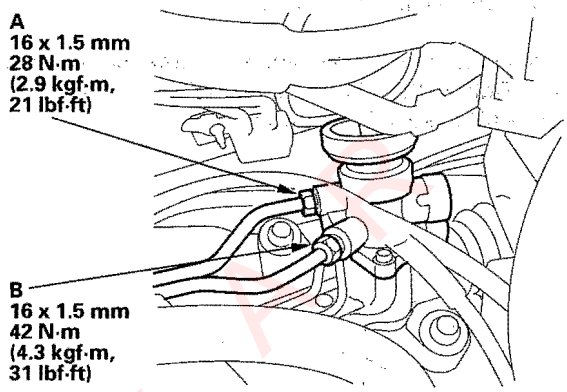

16. Tighten the feed line flare nut (B) to the specified torque.

17. Install the P/S heat baffle plate (A).

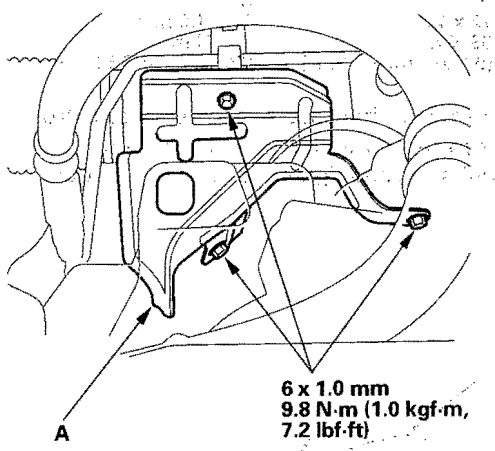

(cont'd)

Steering Gearbox Installation (cont'd)

18. Raise the jack supporting front suspension subframe with special tool until the subframe is in position (see page 20-156).

19. Install the front suspension subframe rear bracket (A). Tighten the 12 mm flange bolts (B) and 14 mm bolts (C) to specified torque.

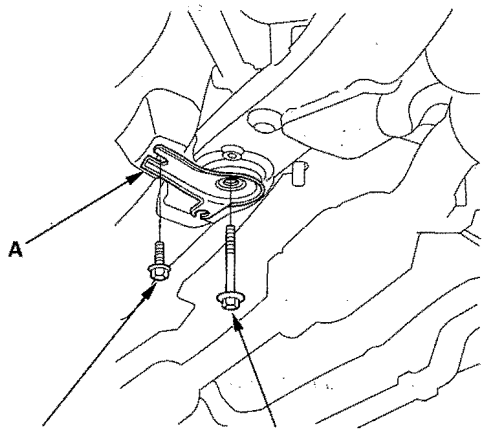

20. Install the front suspension subframe front bracket (A) with 12 mm flange bolts (B) and 14 mm special bolts (C), and tighten to specified torque.

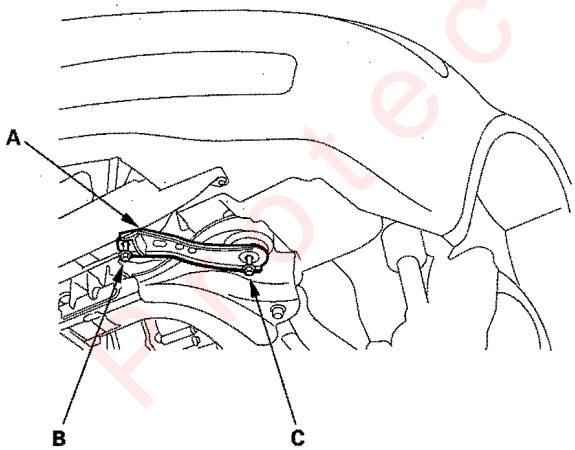

21. Install the front suspension subframe left mid mount (A).

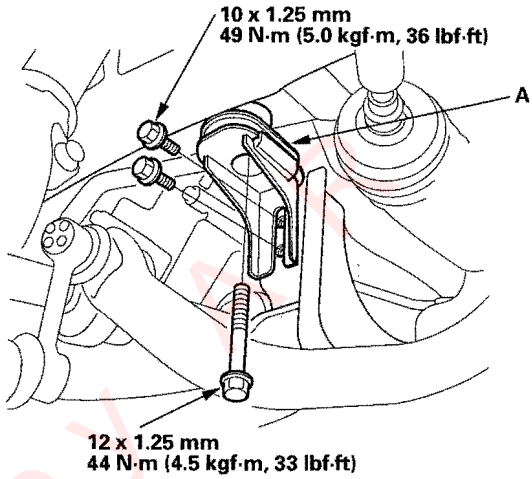

22. Install the front suspension subframe right mid mount bolts (A).

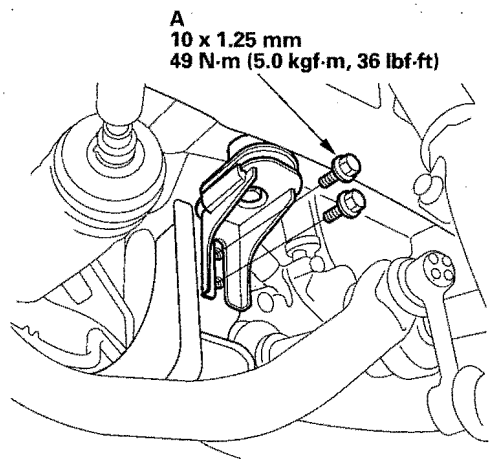

Protected by

23. Remove the front suspension subframe supporting special tool, and lower the jack.

24. Install the engine under cover (A).

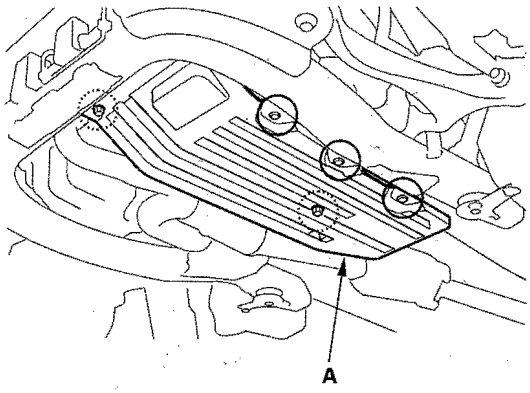

25. Install the splash shield (A).

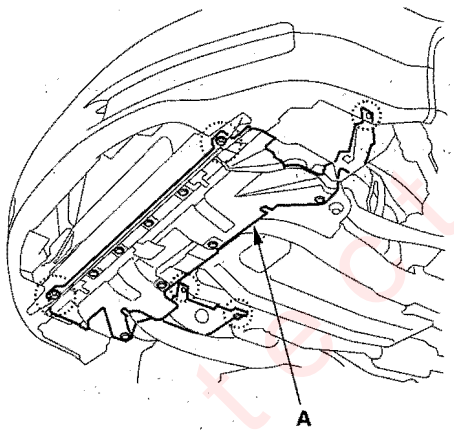

26. Connect the power steering pressure (PSP) switch connector (A).

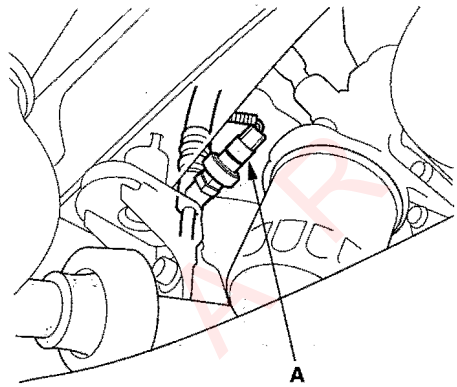

Protected by KR

(cont'd)

Steering Gearbox Installation (cont'd)

27. Wipe off any grease from the ball joint tapered section and threads. Then reconnect the tie-rod end (A) to the knuckle arms.

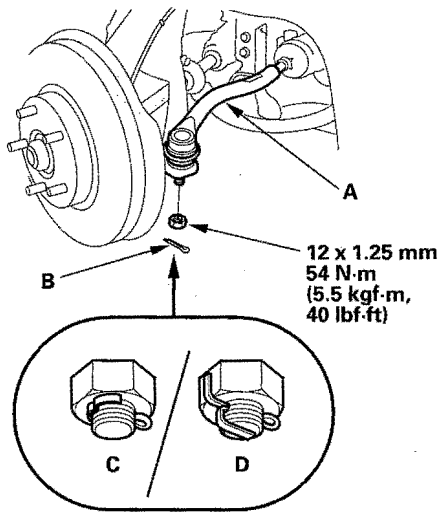

28. Install the tie-rod end ball joint nut, and tighten it to the specified torque. Then install the new cotter pin (B), and bend it as shown (C) or (D).

29. Install the new cover seal (A) all the way around in the steering joint cover B. Make sure there are no wrinkles in the seal, then install the steering joint cover B.

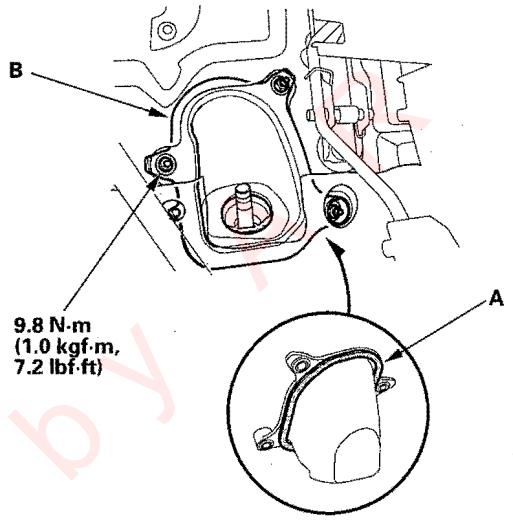

30. Center the steering rack within its stroke.

31. Position the steering column joint (A) so the bolt (B) near to the notch (C) is within the range shown.

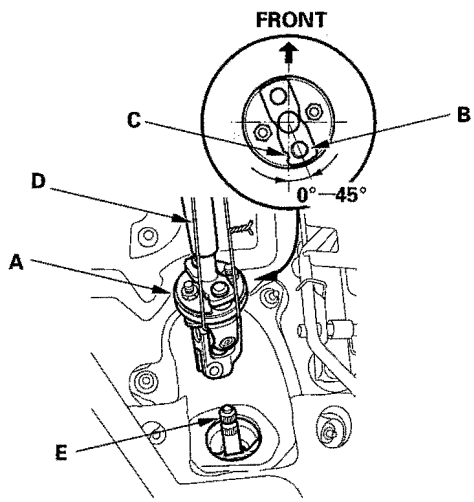

32. With the rack in the straight ahead driving position, cut the wire (D) and slip the lower end of the steering joint on to pinion shaft (E).

Protected by

33. Align the bolt hole (A) on the steering joint with the groove (B) around the pinion shaft, and loosely install the joint bolt (C). Make sure the joint bolt is securely in the groove in the pinion shaft. Pull on the steering joint to make sure the steering joint is fully seated.

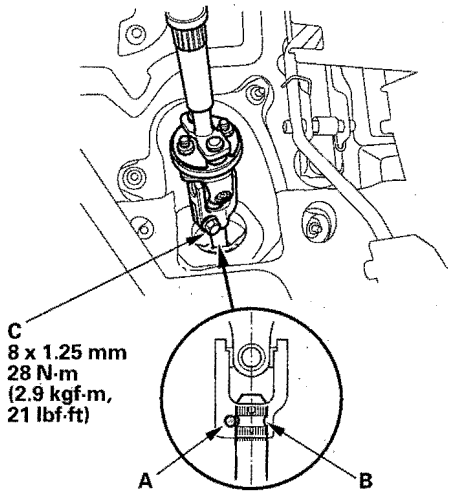

34. Tighten the steering joint bolt to the specified torque.

35. Install the steering joint cover A.

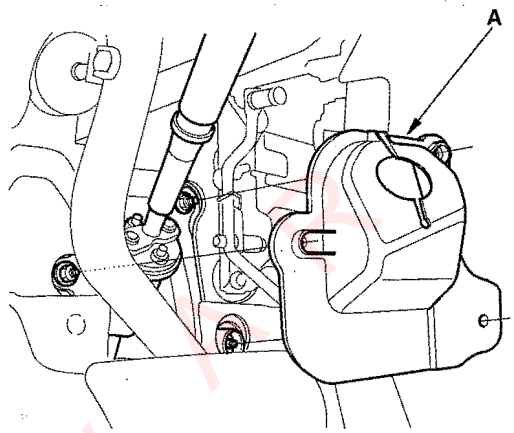

36. Install the front wheel, then set the wheels in the straight ahead position.

37. Center the cable reel by first rotating it clockwise until it stops. Then rotate it counterclockwise (about three full turns) until the arrow mark on the label points straight up. Reinstall the steering wheel (see page 17-23).

38. Fill the system with power steering fluid, and bleed air from the system (see page 17-12).

39. After installation, do the following checks.

    - Start the engine, allow it to idle, and turn the steering wheel from lock-to-lock several times to warm up to the fluid. Check the gearbox for leaks (see page 17-11).
    - Do the front toe inspection (see page 18-6).
    - Check the steering wheel spoke angle.
      If steering spoke angles to the right and left are not equal (steeling wheel and rack are not centered), correct the engagement of the joint/ pinion shaft serrations, and repeat step 37. Then adjust the front toe by turning the tie-rod ends, if necessary.

40. Install the right side engine component cover, passenger's and driver's cowl top extensions.

Protected by KAR

Tie-rod Ball Joint Boot Replacement

Special Tools Required
Front hub dis/assembly tool 07965-SA50500

1. Remove the boot from the tie-rod end, and wipe the old grease off the ball pin.
2. Pack the lower area of the ball pin (A) with fresh multipurpose grease.

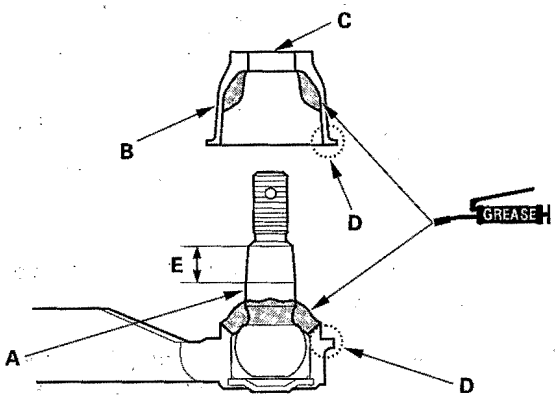

3. Pack the interior of the new boot (B) and lip (C) with fresh multipurpose grease.

   Note these items when installing new grease:
   - Keep grease off the boot mounting area (D) and the tapered section (E) of the ball pin.
   - Do not allow dust, dirt, or other foreign materials to enter the boot.

4. Install the new boot (A) using the special tool. The boot must not have a gap at the boot installation sections (B). After installing the boot, check the ball pin tapered section for grease contamination, and wipe it if necessary.

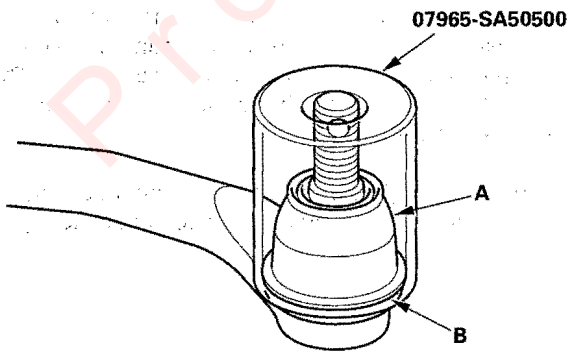

Gearbox Mount Cushion Replacement

1. Remove the steering gearbox (see page 17-29).
2. Position the 34 mm socket wrench (A) on the flange part of the gearbox housing with a washer (B), 10 x 105 mm flange bolt (C) and the 10 mm nut (D) as shown.

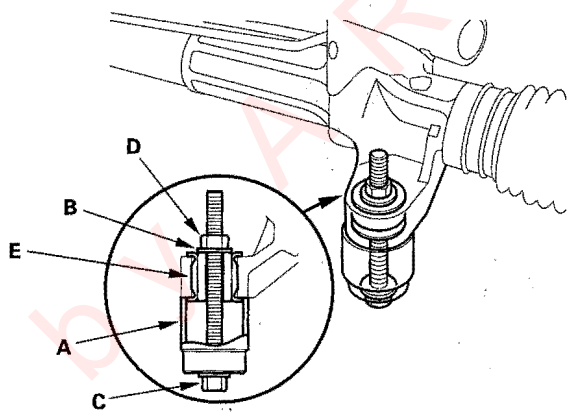

3. Hold the flange bolt with a wrench, and tighten the nut with another wrench. Remove the gearbox mount cushion (E).
4. Apply a mild soap and water solution to the new gearbox mount cushion surface (A), then place it on the gearbox mounting cushion hole.

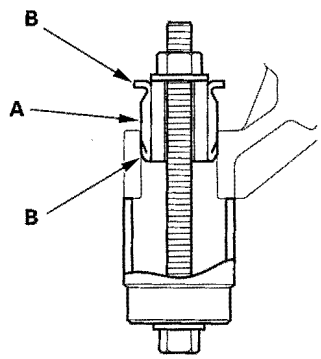

5. Position the 34 mm socket wrench on the flange part of the gearbox housing with a washer, flange bolt, and the nut as shown.
6. Install the gearbox mount cushion by tightening the nut until the mount cushion edges (B) properly fit on the gearbox flange surface.

Protected by AR

Suspension

Front and Rear Suspension

Special Tools 18-2
Component Location Index 18-3
Wheel Alignment 18-5
Wheel Bearing End Play Inspection 18-8
Wheel Runout Inspection 18-8
Ball Joint Removal 18-9

Front Suspension

Knuckle/Hub/Wheel Bearing Replacement 18-11
Ball Joint Boot Replacement 18-18
Upper Arm Replacement 18-18
Lower Arm Removal/Installation 18-20
Stabilizer Link Replacement 18-22
Stabilizer Bar Replacement 18-23
Damper/Spring Replacement 18-24

Rear Suspension

Knuckle/Hub Replacement 18-29
Upper Arm Removal/Installation 18-35
Lower Arm Replacement 18-36
Control Arm Replacement 18-37
Trailing Arm Removal/Installation 18-37
Leading Arm Replacement 18-38
Stabilizer Link Removal/Installation 18-39
Stabilizer Bar Replacement 18-40
Knuckle Bushing Replacement 18-41
Damper/Spring Replacement 18-42

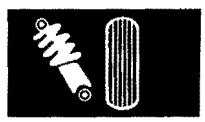

Provided by AR

Special Tools

Ref. No.	Tool Number	Description	Qty
①	07AAF-SEPA100	Ball Joint Remover	1
②	07AAF-SEPA200	Ball Joint Thread Protector	1
③	07GAF-SD40100	Hub Dis/Assembly Tool, 42 mm	1
④	07GAG-SD40700	Ball Joint Boot Clip Guide	1
⑤	07MAC-SL00200	Ball Joint Remover, 28 mm	1
⑥	07NAD-SS00100 or 07NAD-SS00101	Bushing Driver 30—40	1
⑦	07746-0010600	Attachment, 72 x 75 mm	1
⑧	07749-0010000	Driver	1
⑨	07948-SB00101	Attachment, 96 mm	1
⑩	07965-SD90100	Support Base	1

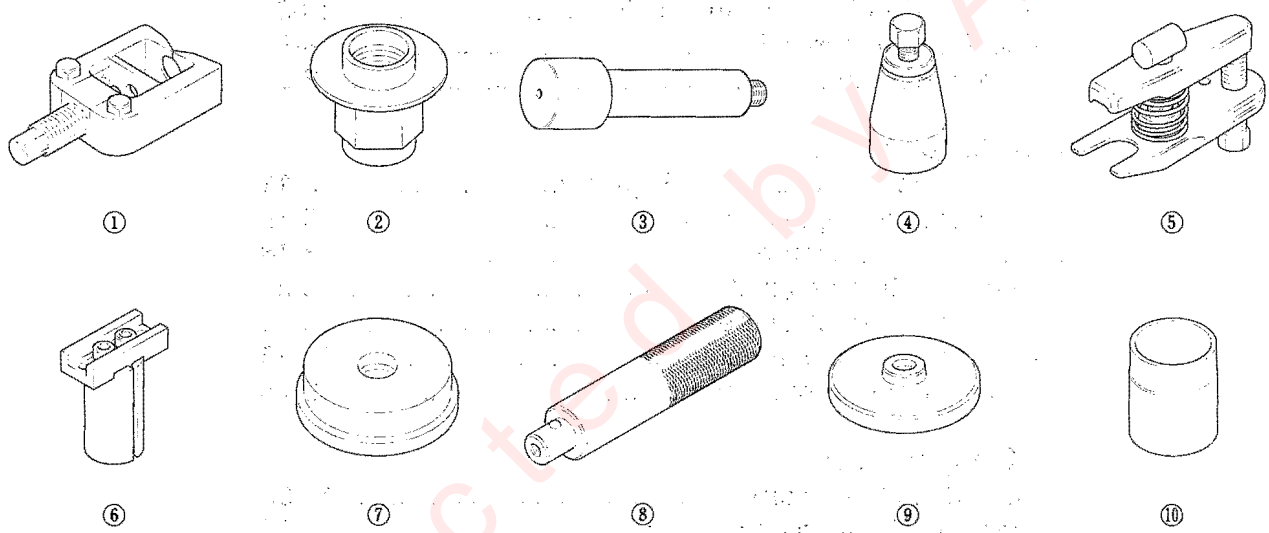

Protected by AR

Component Location Index

Front Suspension

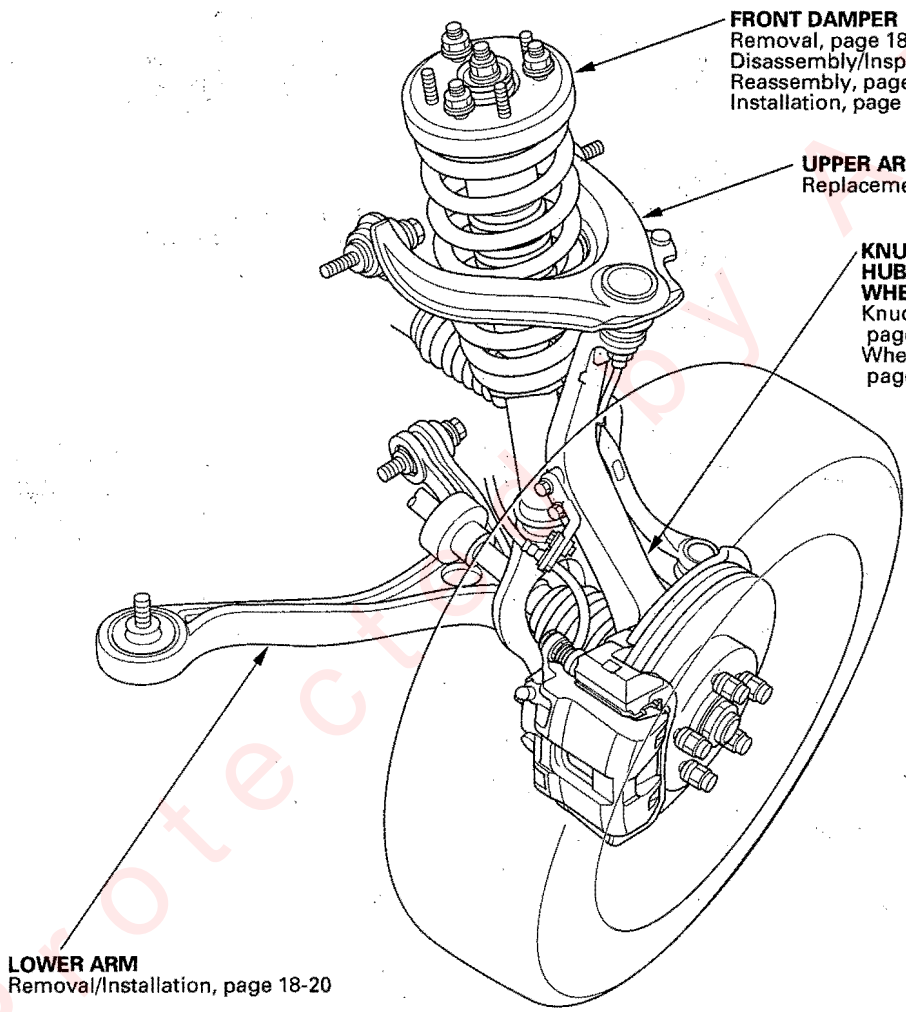

Protected by A

Component Location Index (cont'd)

Rear Suspension

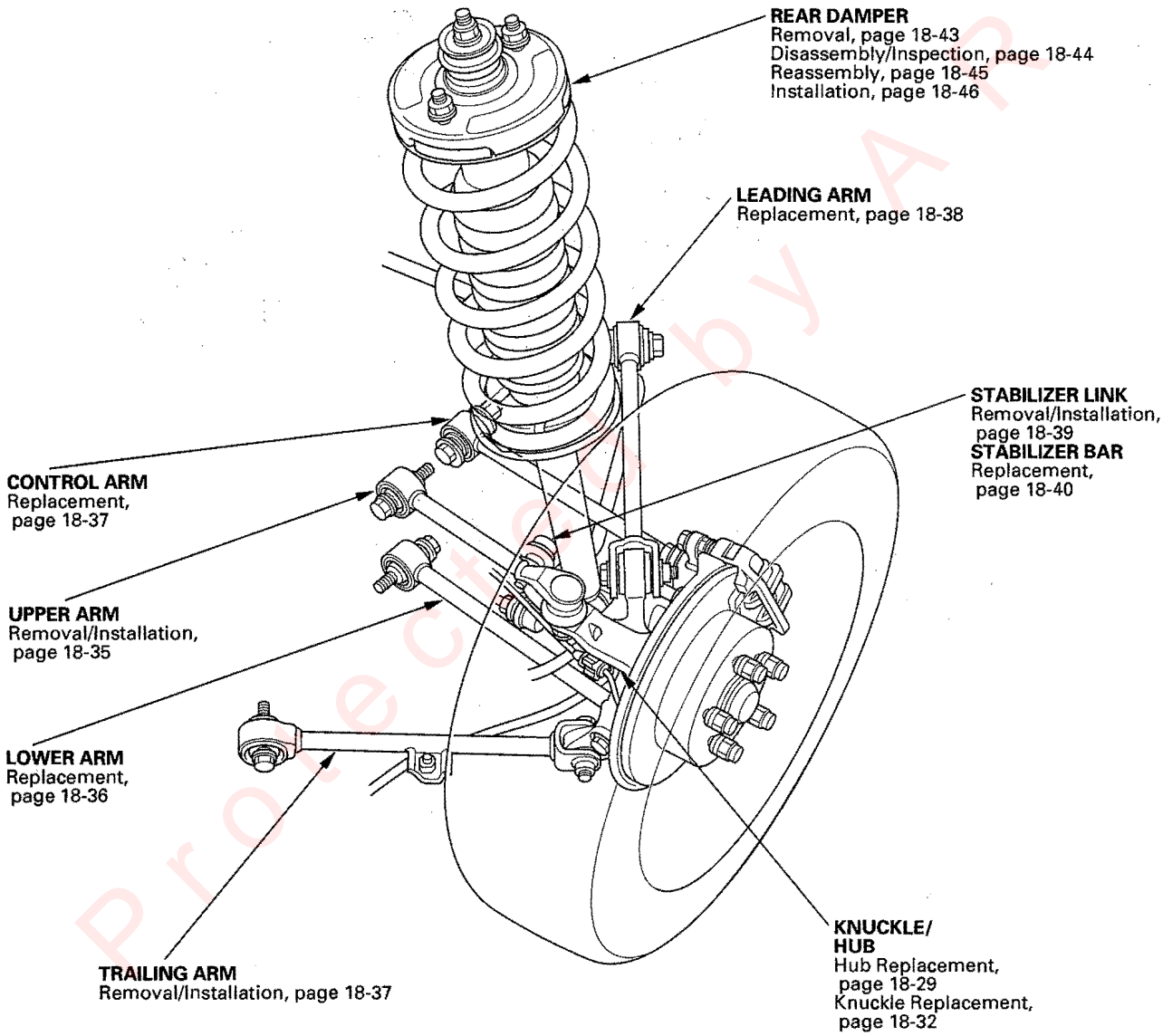

Protected by ARS

Wheel Alignment

The suspension can be adjusted for front and rear toe.

Pre-Alignment Checks

For proper inspection and adjustment of the wheel alignment, do these checks:

1. Release the parking brake to avoid an incorrect measurement.
2. Make sure the suspension is not modified.
3. Check the tire size and tire pressure.

   Tire size:
   Front/Rear: P235/45R17 93W

   Tire pressure:
   Front:
   M/T model: 240 kPa (2.4 kgf/cm², 35 psi)
   A/T model: 220 kPa (2.2 kgf/cm², 32 psi)
   Rear: 220 kPa (2.2 kgf/cm², 32 psi)

4. Check the runout of the wheels and tires (see page 18-8).
5. Check the suspension ball joints. (Hold a wheel with your hands, and move it up and down and right and left to check for wobbling.)

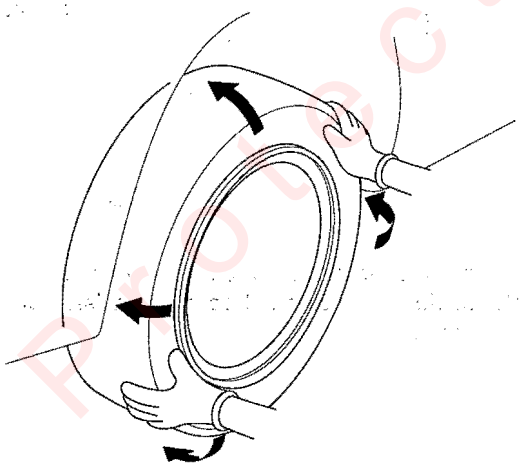

6. Bounce the vehicle up and down several times to stabilize the suspension.

Caster Inspection

Use commercially available computerized four wheel alignment equipment to measure wheel alignment (caster, camber, toe, and turning angle). Follow the equipment manufacturer's instructions.

1. Check the caster angle.

   Caster angle: 3° 17′ ±45′
   (Maximum difference between the right and left side: 0° 45′)

2. If out of specification, check for bent or damaged suspension components.

(cont'd)

Protected by AR

Wheel Alignment (cont'd)

Camber Inspection

Use commercially available computerized four wheel alignment equipment to measure wheel alignment (caster, camber, toe, and turning angle). Follow the equipment manufacturer's instructions.

1. Check the camber angle.

   Camber angle:
   Front: −0°30′ ±30′
   Rear: −1°00′ ±30′
   (Maximum difference between the right and left side: 0°45′)

2. If out of specification, check for bent or damaged suspension components.

Front Toe Inspection/Adjustment

Use commercially available computerized four wheel alignment equipment to measure wheel alignment (caster, camber, toe, and turning angle). Follow the equipment manufacturer's instructions.

1. Center the steering wheel spokes.
2. Check the toe with the wheels pointed straight ahead.

   Front toe-in: 0±2 mm (0±0.08 in.)

   - If no adjustment is required, remove the alignment equipment.
   - If adjustment is required, go to step 3.

3. Loosen the tie-rod locknuts (A) while holding the flat surface sections (B) of the tie-rod end with a wrench, and turn both rack ends (C) until the front toe is within specifications.

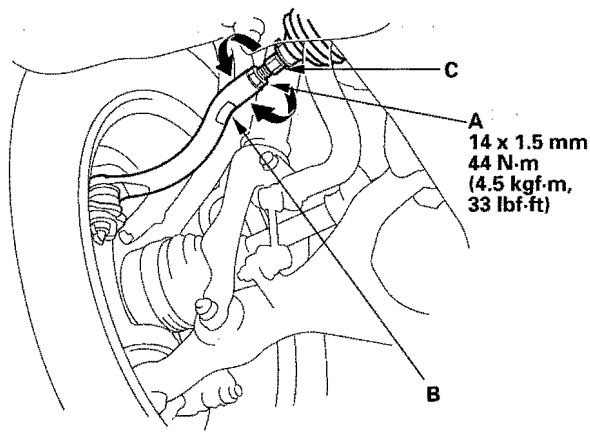

4. After adjusting, tighten the tie-rod locknuts. Reposition the rack-end boot if it is twisted or displaced.

Protected by AR

Rear Toe Inspection/Adjustment

Use commercially available computerized four wheel alignment equipment to measure wheel alignment (caster, camber, toe, and turning angle). Follow the equipment manufacturer's instructions.

1. Release the parking brake to avoid an incorrect measurement.
2. Check the toe.

   Rear toe-in: 2±2 mm (0.08±0.08 in.)

   - If no adjustment is required, remove the alignment equipment.
   - If adjustment is required, go to step 3.

3. Hold the adjusting bolt (A) on the rear control arm (B), and loosen the self-locking nut (C).

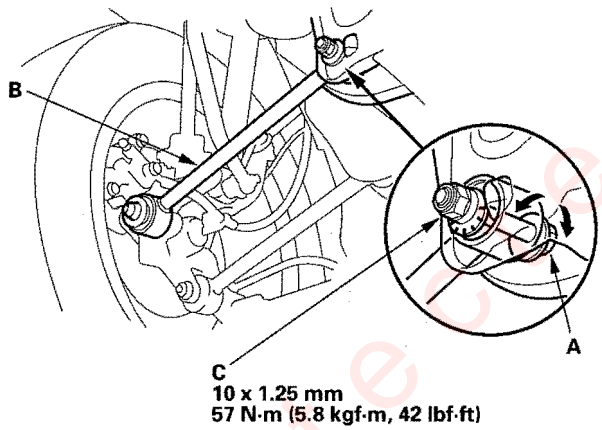

4. Replace the self-locking nut with a new one, and lightly tighten it.

   NOTE: Always use a new self-locking nut whenever it has been loosened.

5. Adjust the rear toe by turning the adjusting bolt until the toe is correct.
6. Tighten the self-locking nut while holding the adjusting bolt.

Turning Angle Inspection

Use commercially available computerized four wheel alignment equipment to measure wheel alignment (caster, camber, toe, and turning angle). Follow the equipment manufacturer's instructions.

1. Turn the wheel right and left while applying the brake, and measure the turning angle of both wheels.

   Turning angle:
   Inward: 35°06' ±2°
   Outward: 30°12' (reference)

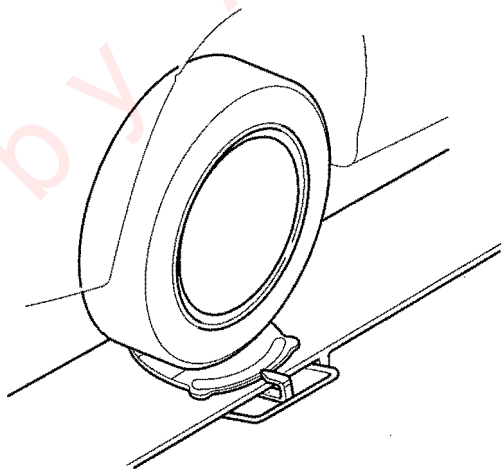

2. If the turning angle is not within the specifications, check for bent or damaged suspension components.

Protected by A R

Wheel Bearing End Play Inspection

1. Raise the vehicle, and support it with safety stands in the proper locations (see page 1-7).
2. Remove the wheels, taking care not to scratch the front calipers on M/T models. Then reinstall the wheel nuts (A), and tighten to the specified torque.

Front:

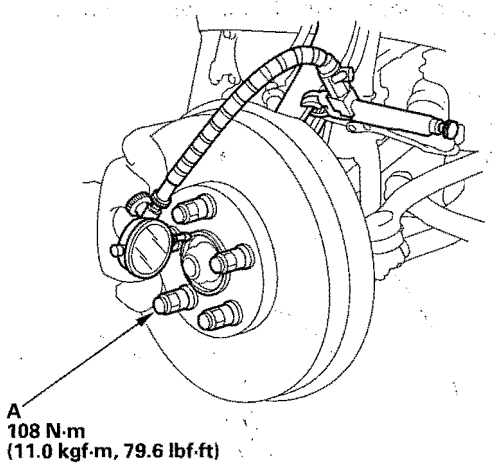

Rear:

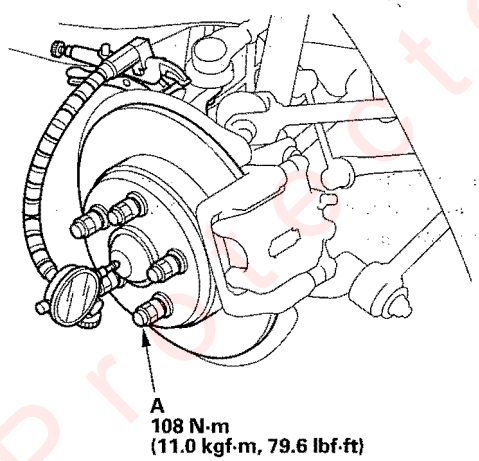

3. Attach the dial gauge. Place the dial gauge against the hub flange or hub cap.

Front/Rear:
Standard: 0—0.05 mm (0—0.002 in.)

4. Measure the bearing end play by moving the brake disc inward and outward.
5. If the bearing end play measurement is more than the standard, replace the wheel bearing or the hub bearing unit.

Wheel Runout Inspection

NOTE: When measuring the front wheel runout, turn the other side of the wheel slowly by hand.

1. Raise the vehicle, and support it with safety stands in the proper locations (see page 1-7).
2. Check for a bent or deformed wheel.
3. Set up the dial gauge as shown, and measure the axial runout by turning the wheel.

Front and rear wheel axial runout:
Standard: 0—0.7 mm (0—0.03 in.)
Service limit: 2.0 mm (0.08 in.)

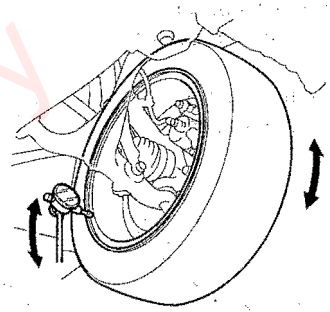

4. Reset the dial gauge to the position shown, and measure the radial runout.

Front and rear wheel radial runout:
Standard: 0—0.7 mm (0—0.03 in.)
Service limit: 1.5 mm (0.06 in.)

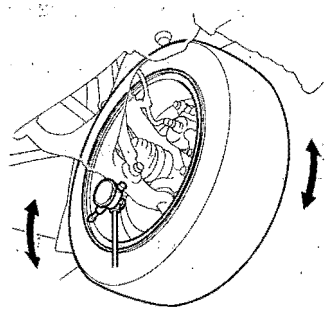

5. If the wheel runout is not within the specification, check the wheel bearing end play (see page 18-8), and make sure the mating surfaces on the brake disc and the inside of the wheel are clean.
6. If the bearing end play is within the specification but the wheel runout is more than the service limit, replace the wheel.

Protected by AR

Ball Joint Removal

Special Tools Required
- Ball joint remover, 28 mm 07MAC-SL00200
- Ball joint thread protector 07AAF-SEPA200
- Ball joint remover 07AAF-SEPA100 (for the lower ball joint)

NOTICE

Always use a ball joint remover to disconnect a ball joint. Do not strike the housing or any other part of the ball joint connection to disconnect it.

07MAC-SL00200

1. Install a hex nut (A) onto the threads of the ball joint (B). Make sure the nut is flush with the ball joint pin end to prevent damage to the threaded end of the ball joint pin.

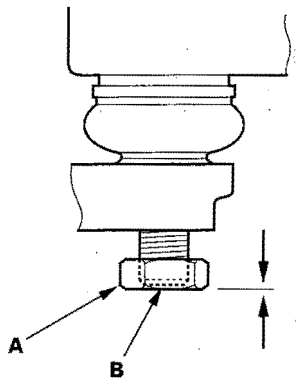

2. Apply grease to the special tool on the areas shown (A). This will ease installation of the tool and prevent damage to the pressure bolt (B) threads.

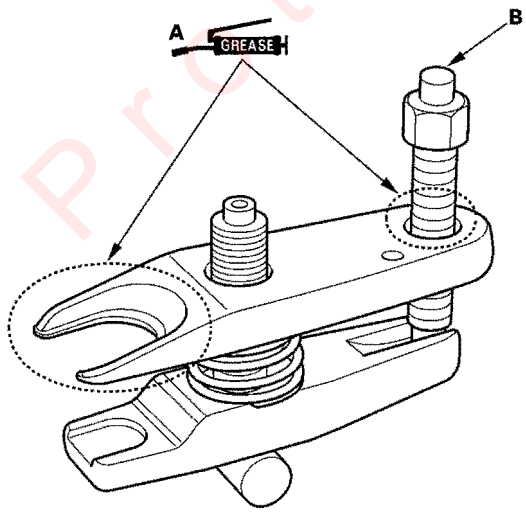

3. Loosen the pressure bolt (A), and install the special tool as shown. Insert the jaws carefully, making sure not to damage the ball joint boot. Adjust the jaw spacing by turning the adjusting bolt (B).

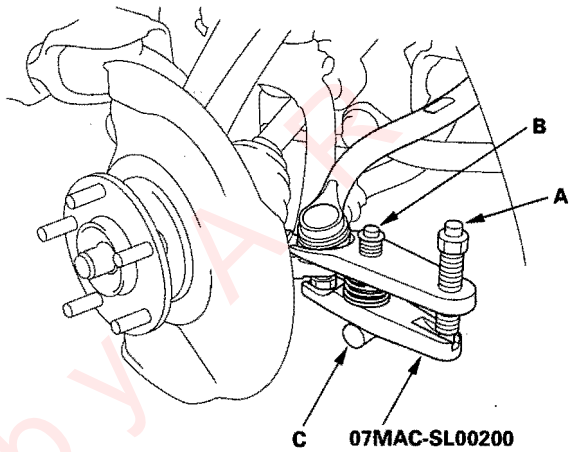

4. After adjusting the adjusting bolt, make sure the head (C) of the adjusting bolt is in the position shown to allow the jaw to pivot.

5. With a wrench, tighten the pressure bolt until the ball joint pin pops loose from the ball joint pin hole. If necessary, apply penetrating type lubricant to loosen the ball joint pin.

   NOTE: Do not use pneumatic or electric tools on the pressure bolt.

6. Remove the tool, then remove the nut from the end of the ball joint pin, and pull the ball joint out of the ball joint pin hole. Inspect the ball joint boot, and replace it if damaged.

(cont'd)

Protected by AIR

Ball Joint Removal (cont'd)

07AAF-SEPA100

1. Install the special tool onto the threads of the ball joint (A) to prevent damage to the threaded end of the ball joint pin.

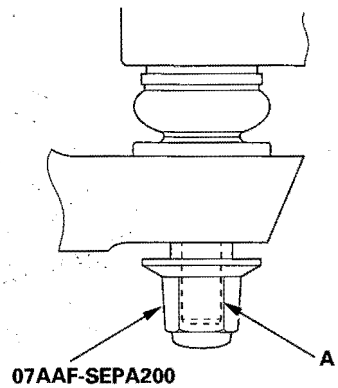

2. Apply grease to the special tool on the areas shown (A). This will ease installation of the tool and prevent damage to the pressure bolt (B) threads.

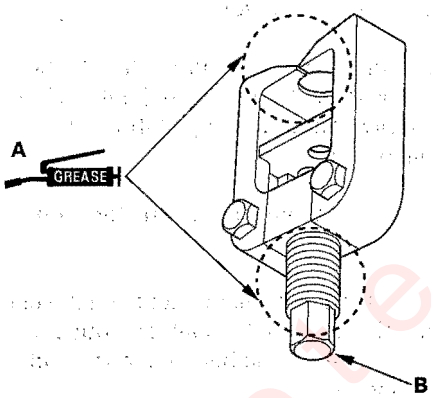

3. Loosen the pressure bolt (A), and install the special tool as shown. Insert the jaws carefully, making sure not to damage the ball joint boot.

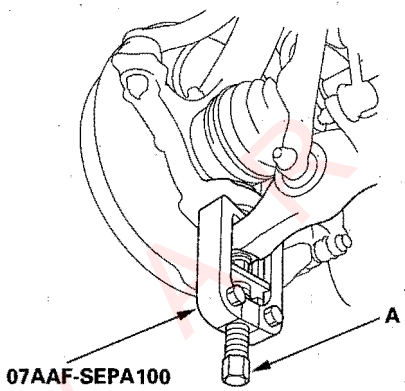

4. With a wrench, tighten the pressure bolt until the ball joint pin pops loose from the ball joint pin hole. If necessary, slightly raise the boot and apply penetrating type lubricant to help loosen the ball joint pin.

   NOTE: Do not use a hammer on the tool.

5. Remove the special tools from the knuckle and the end of the ball joint pin, and pull the ball joint out of the ball joint pin hole. Inspect the ball joint boot, and replace it if damaged.

   NOTE: If the ball joint collar/sleeve comes loose, you must replace the lower arm.

Protected by ARK

Knuckle/Hub/Wheel Bearing Replacement

Exploded View

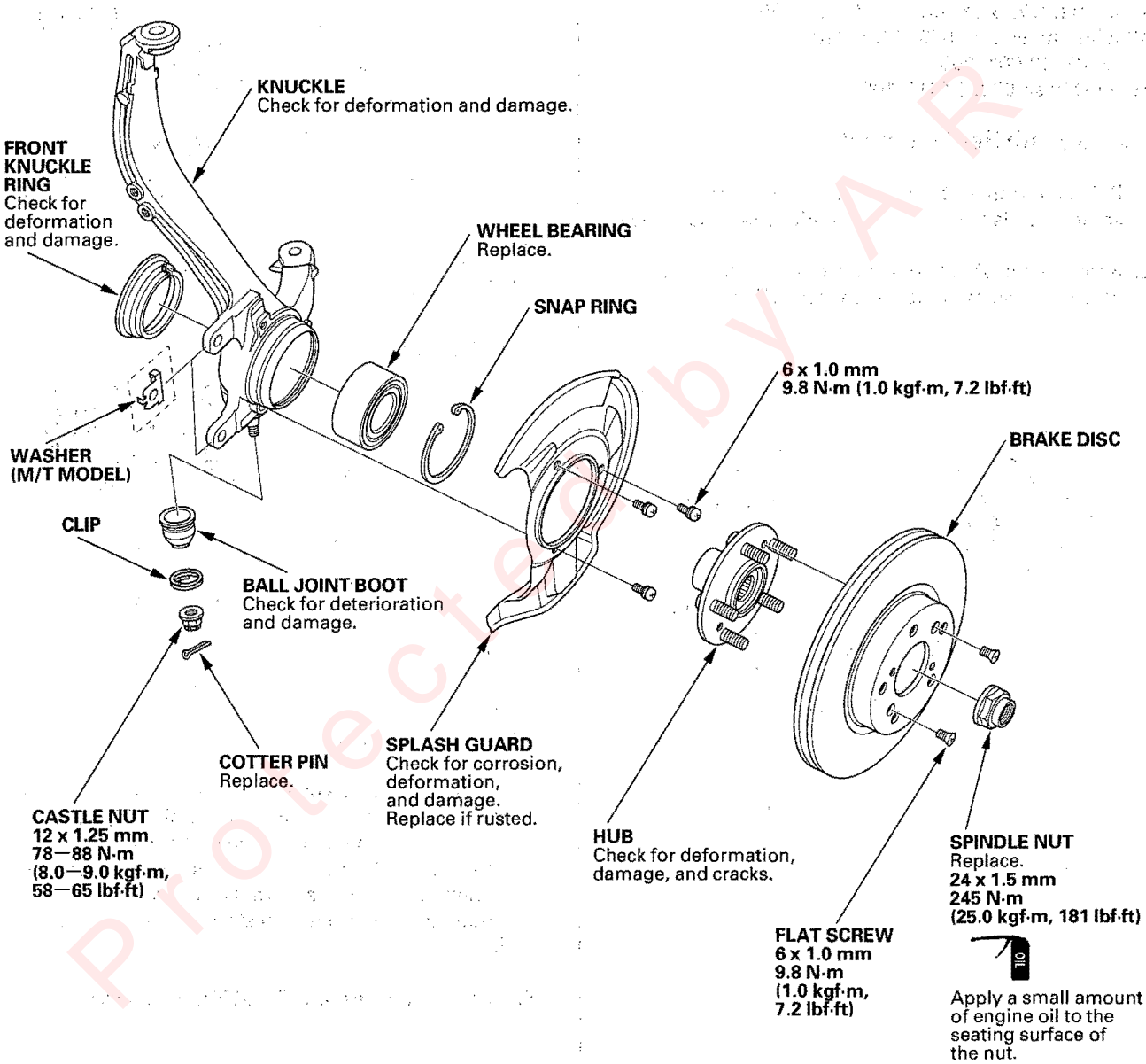

Protected by A R

(cont'd)

Knuckle/Hub/Wheel Bearing Replacement (cont'd)

Special Tools Required
- Ball joint thread protector 07AAF-SEPA200
- Ball joint remover 07AAF-SEPA100
- Hub dis/assembly tool, 42 mm 07GAF-SD40100
- Ball joint remover, 28 mm 07MAC-SL00200
- Attachment, 72 x 75 mm 07746-0010600
- Attachment, 96 mm 07948-SB00101
- Driver 07749-0010000
- Support base 07965-SD90100

Knuckle/Hub Replacement

1. Raise the front of the vehicle, and support it with safety stands in the proper locations (see page 1-7).

2. Remove the wheel nuts and front wheel, taking care not to scratch the caliper on M/T model.

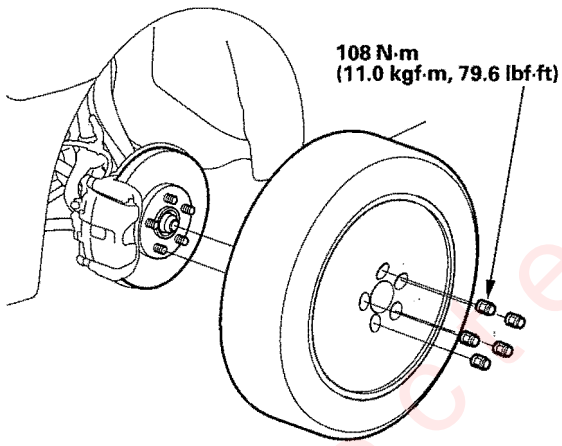

3. Remove the brake hose mounting bracket (A).

A/T model:

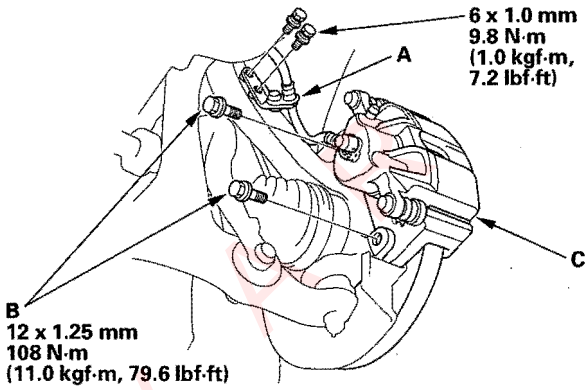

M/T model:

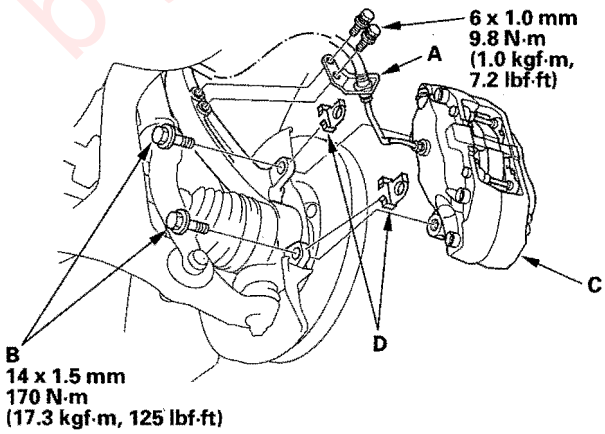

4. Remove the brake caliper bracket mounting bolts (B), and remove the caliper assembly (C) from the knuckle. To prevent damage to the caliper assembly or brake hose, use a short piece of wire to hang the caliper assembly from the undercarriage. Do not twist the brake hose with force.

5. Remove the washers (D) (M/T model only).

Protected by

6. Remove the wheel sensor (A) from the knuckle. Do not disconnect the wheel sensor connector.

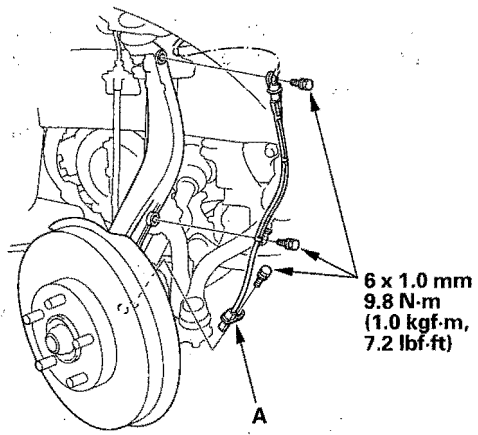

7. Raise the stake (A), then remove the spindle nut (B).

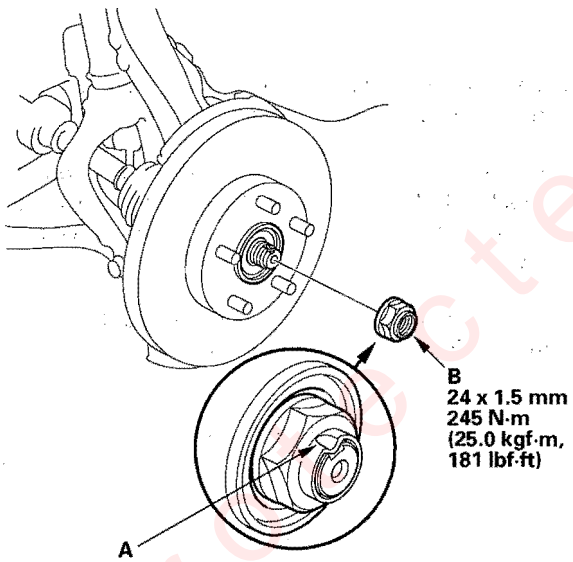

8. Remove the 6 mm brake disc retaining screws (A).

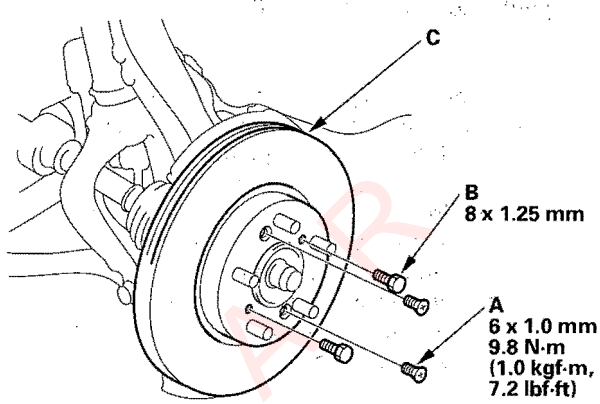

9. Screw two 8 x 1.25 mm bolts (B) into the disc to push it away from the hub. Turn each bolt two turns at a time to prevent cocking the disc excessively.

10. Remove the brake disc (C) from the hub.

11. Remove the cotter pin (A) from the tie-rod end ball joint, then loosen the nut (B).

    NOTE: During installation, install the new cotter pin after tightening the nut, and bend its end as shown.

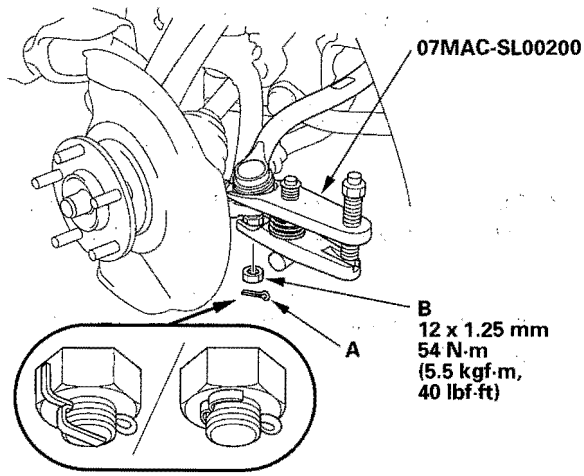

12. Disconnect the tie-rod end ball joint from the knuckle using the special tool (see page 18-9).

(cont'd)

Protected by AR

Knuckle/Hub/Wheel Bearing Replacement (cont'd)

13. Remove the cotter pin (A) from the lower arm ball joint, and remove the nut (B).

    NOTE:
    - To avoid damaging the ball joint, install the special tool on the threads of the ball joint.
    - Be carefull not to damage the ball joint boot when installing the remover.
    - Do not force or hammer on the lower arm, or pry between the lower arm and the knuckle. You could damage the ball joint.
    - Insert the new cotter pin in to the ball joint pin hole from the front to the rear of the vehicle, and bend its end as shown.

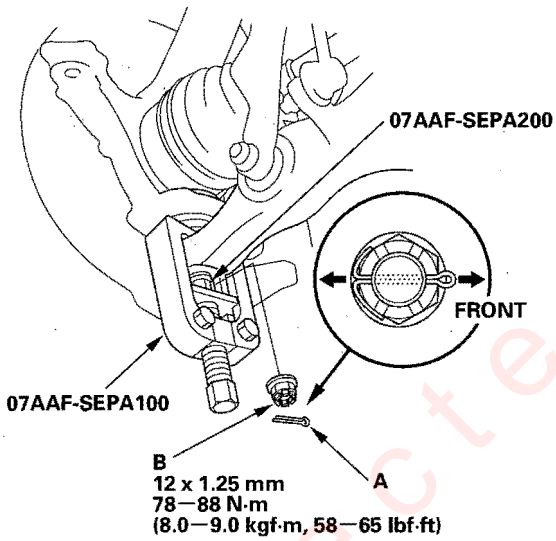

14. Disconnect the lower ball joint from the lower arm using the special tools (see page 18-10).

    NOTE: If the collar on the lower arm is removed with ball joint, the lower arm must be replaced (see page 18-20).

15. Remove the cotter pin (A) from the upper arm ball joint, then loosen the nut (B).

    NOTE: During installation, insert the new cotter pin into the ball joint pin from the front to the rear of the vehicle, and bend its end as shown.

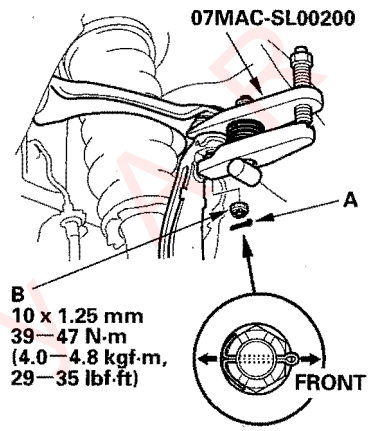

16. Disconnect the upper arm ball joint from the knuckle using the special tool (see page 18-9).

17. Remove the driveshaft outboard joint (A) from the knuckle (B) by tapping the driveshaft end (C) with a plastic hammer while drawing the hub outward, then remove the knuckle.

    NOTE: Do not pull the driveshaft end outward. The inner driveshaft joint may come apart.

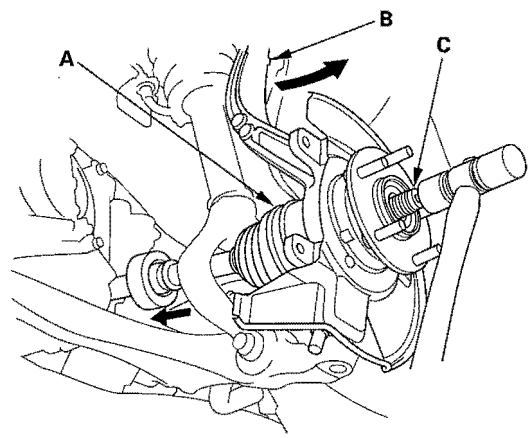

Protected by MH

18. Install the knuckle/hub in the reverse order of removal, and note these items:

- Be careful not to damage the ball joint boot when installing the knuckle.
- Tighten all mounting hardware to the specified torque values.
- Before connecting the lower ball joint to the lower arm, degrease the threaded section and tapered portion of the ball joint pin, the lower arm connecting hole, the threaded section and mating surface of the castle nut.
- First install all the components and lightly tighten the bolts and nuts, then raise the suspension to load it with the vehicle's weight before fully tightening to the specified torque values. Do not place the jack against the ball joint pin of the knuckle.
- Torque the castle nut to the lower torque specification, then tighten it only far enough to align the slot with the ball joint pin hole. Do not align the castle nut by loosening it.
- Install a new cotter pin on the castle nut after torquing.
- Use a new spindle nut on reassembly.
- Before installing the spindle nut, apply a small amount of engine oil to the seating surface of the nut. After tightening, use a drift to stake the spindle nut shoulder against the driveshaft.
- Before installing the brake disc, clean the mating surface of the front hub and the inside of the brake disc.
- Before installing the wheel, clean the mating surface of the brake disc and the inside of the wheel.
- Take care not to scratch the front calipers on M/T model when installing the front wheels.
- Check the front wheel alignment, and adjust if necessary (see page 18-5).

Wheel Bearing Replacement

1. Separate the hub (A) from the knuckle (B) using the special tool and a hydraulic press. Hold the knuckle with the attachment (C) of the hydraulic press or equivalent tool. Be careful not to deform the splash guard. Hold onto the hub to keep it from falling when pressed clear.

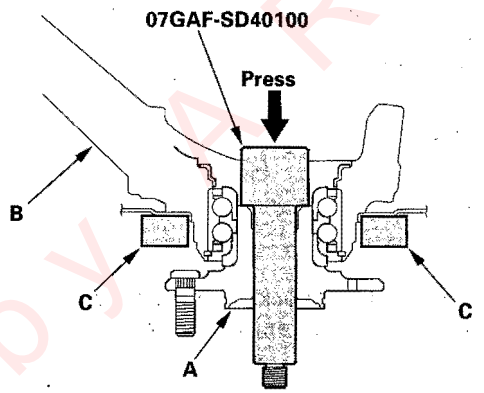

2. Press the wheel bearing inner race (A) off of the hub (B) using the special tool, a commercially available bearing separator (C), and a press.

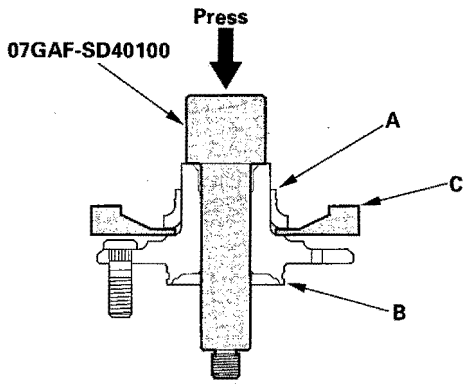

(cont'd)

Protected by AR

Knuckle/Hub/Wheel Bearing Replacement (cont'd)

3. Remove the snap ring (A) and the splash guard (B) from the knuckle (C).

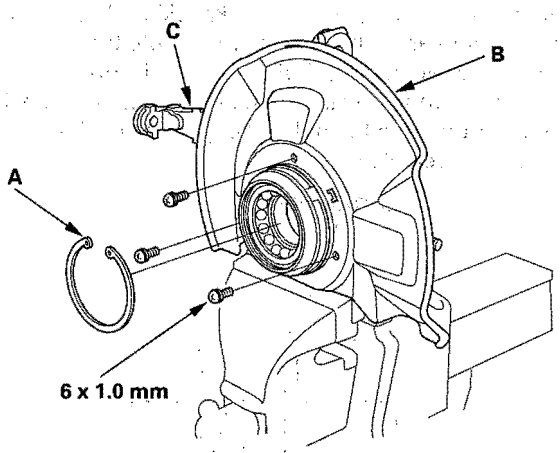

4. Check the front knuckle ring (A) for damage or deformation, and replace it if necessary.

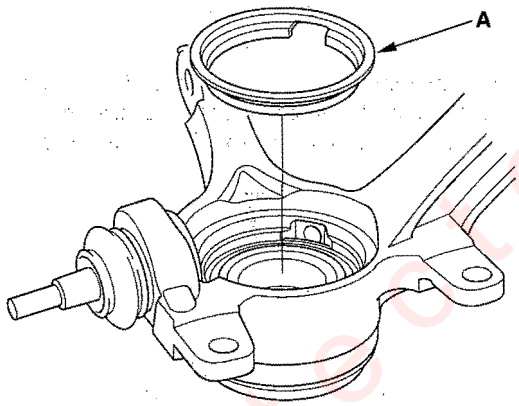

5. Press the wheel bearing (A) out of the knuckle (B) using the special tools and a press.

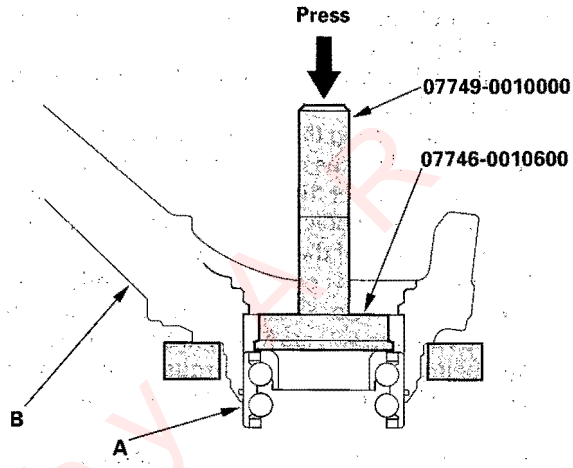

6. Wash the knuckle and hub thoroughly in high flash point solvent before reassembly.

7. Press a new wheel bearing (A) into the knuckle (B) using the old bearing (C), a steel plate (D), the special tools, and a press.

NOTE:
- Install the wheel bearing with the wheel sensor magnetic encoder (E) (brown color), toward the inside of the knuckle.
- Remove any oil, grease, dust, metal debris, and other foreign material from the encoder surface.
- Keep all magnetic tools away from the encoder surface.
- Be careful not to damage the encoder surface when you insert the wheel bearing.

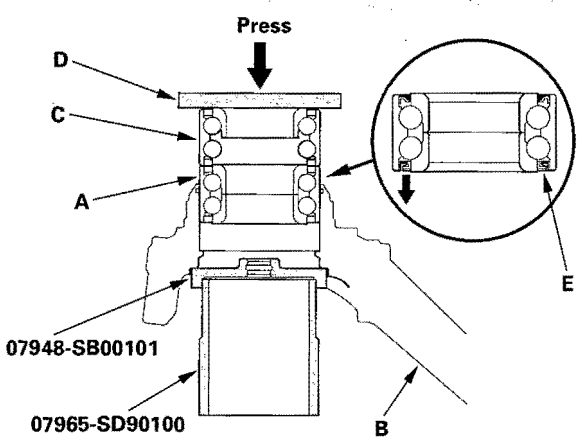

Protected by AR

8. Install the new front knuckle ring (A) on the inside of the knuckle by aligning the cutout portion (B) on the ring with the wheel sensor hole (C) in the knuckle. Be careful not to damage or deform the ring when installing it.

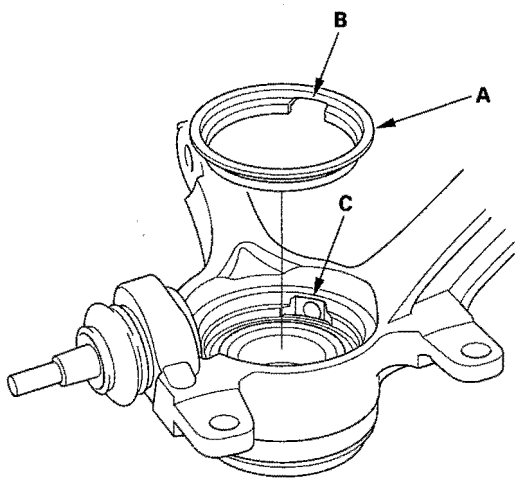

9. Install the snap ring (A) securely in the knuckle (B).

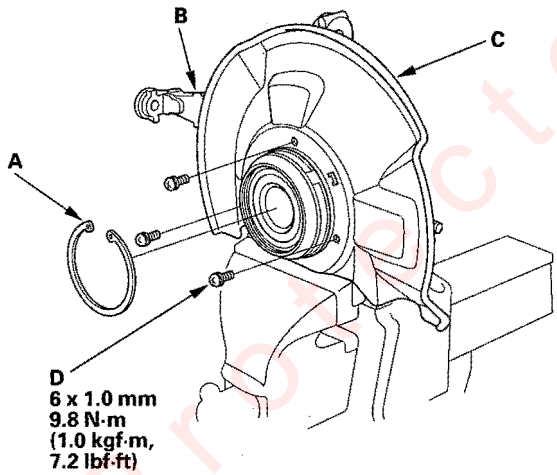

10. Install the splash guard (C), and tighten the screws (D) to the specified torque value.

11. Press the wheel bearing (A) onto the hub (B) using the special tools and a press.

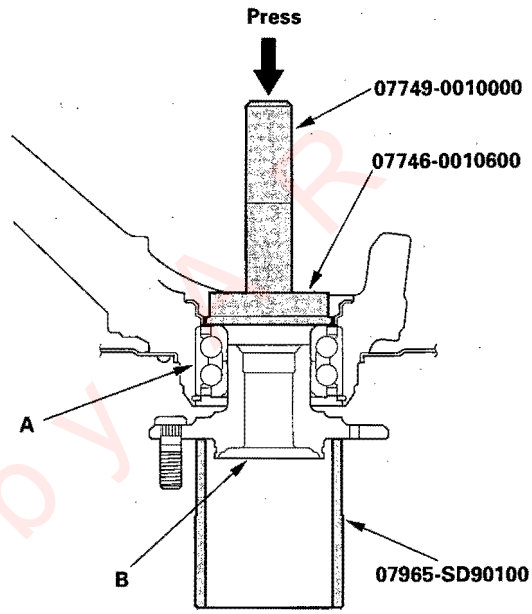

Protected by

Ball Joint Boot Replacement

Special Tools Required
Ball joint boot clip guide 07GAG-SD40700

1. Remove the boot clip and the boot.
2. Pack the interior and lip (A) of a new boot with grease. Keep the grease off of the boot-to-knuckle mating surface (B).

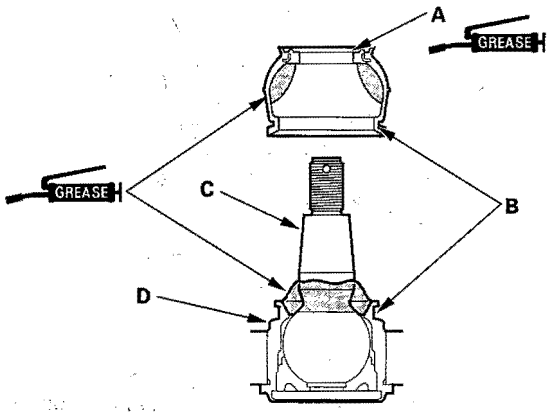

3. Wipe the grease off the tapered portion of the pin (C), and pack fresh grease into the base (D). Do not let dirt or other foreign materials get into the boot.
4. Install the boot on the ball joint, then squeeze it gently to force out any air.
5. Adjust the special tool with the adjusting bolt (A) until its base is just above the groove around the bottom of the boot. Then slide the clip (B) over the tool and into position on the boot.

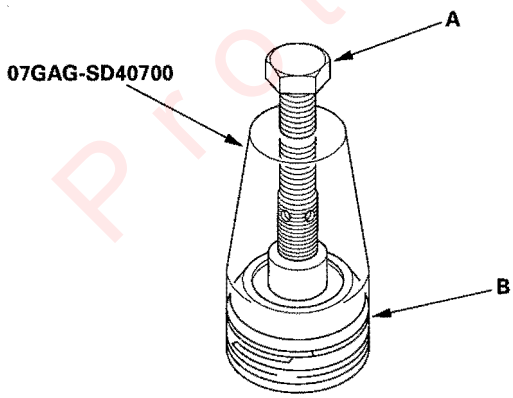

6. After installing a boot, wipe any grease off the exposed portion of the ball joint pin.

Upper Arm Replacement

Special Tools Required
Ball joint remover, 28 mm 07MAC-SL00200

1. Remove the front damper (see page 18-25).
2. Remove the wheel sensor bracket (A) from the upper arm (B).

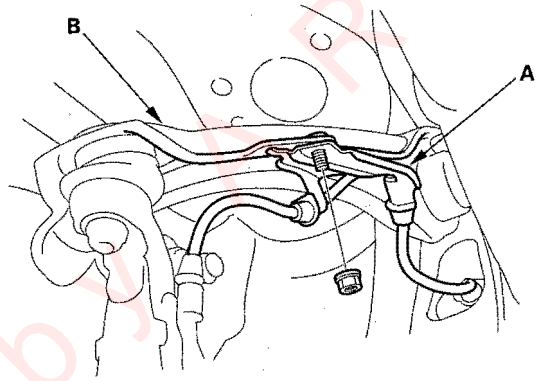

3. Remove the cotter pin (A) from the upper arm ball joint, then loosen the nut (B).

   NOTE: During installation, insert the new cotter pin into the ball joint pin hole from the front to the rear of vehicle, and bend its end as shown.

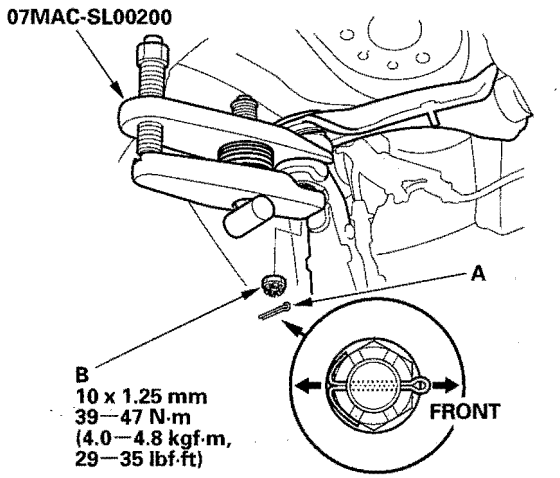

4. Disconnect the upper arm ball joint from the knuckle using the special tool (see page 18-9).

Protected by

5. Remove the upper arm mounting bolts (A), then remove the upper arm (B).

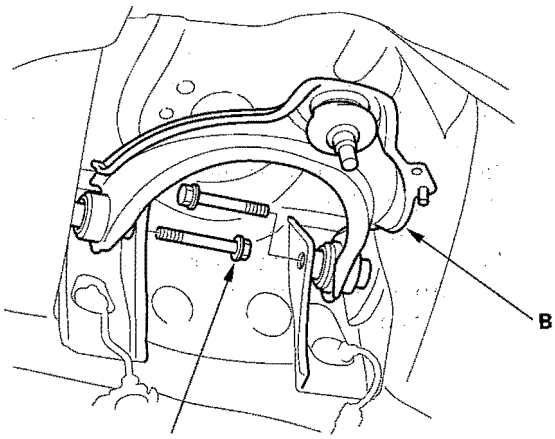

6. Install the upper arm by inserting a rod (A) of appropriate size (O.D. 6 mm/L: 300 mm) into the positioning holes (B), and place the upper arm (C) on the rod to position it before tightening the upper arm mounting bolts.

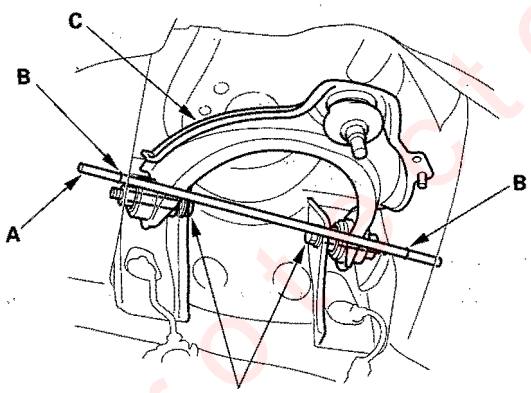

7. Install the remaining parts in the reverse order of removal, and note these items:

- Be careful not to damage the ball joint boot when installing the knuckle.
- First install all the components and lightly tighten the bolts and nuts, then raise the suspension to load it with the vehicle's weight before fully tightening to the specified torque values. Do not place the jack against the ball joint pin of the knuckle.
- Tighten all mounting hardware to specified torque values.
- Torque the castle nut to the lower torque specification, then tighten it only far enough to align the slot with the ball joint pin hole. Do not align the castle nut by loosening it.
- Install a new cotter pin on the castle nut after torquing.
- Before installing the wheel, clean the mating surface on the brake disc and the inside of the wheel.
- Check the front wheel alignment, and adjust if necessary (see page 18-5).

Protected by USA

Lower Arm Removal/Installation

Special Tools Required
- Ball joint thread protector 07AAF-SEPA200
- Ball joint remover 07AAF-SEPA100

1. Raise the front of the vehicle, and support it with safety stands in the proper locations (see page 1-7).

2. Remove the front wheels, taking care not to scratch the calipers on M/T model.

3. Remove the damper fork (A) from the damper (B) and lower arm (C).

   NOTE: During installation, insert the damper fork into the damper lower end so the aligning tab (D) is aligned with the slot (E) in the damper fork. Replace the damper fork mounting nut (F) with a new one.

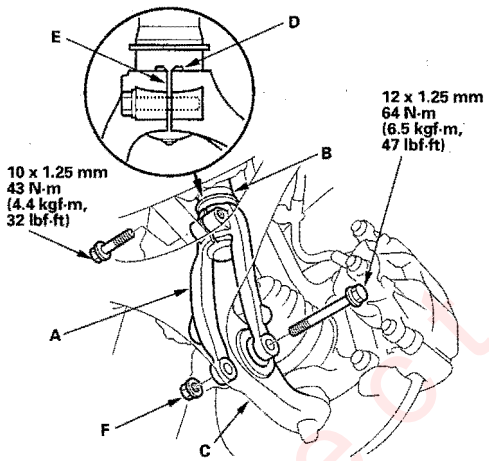

4. Remove the flange nut (A) while holding the joint pin (B) with a hex wrench (C), then disconnect the stabilizer link (D) from the lower arm (E).

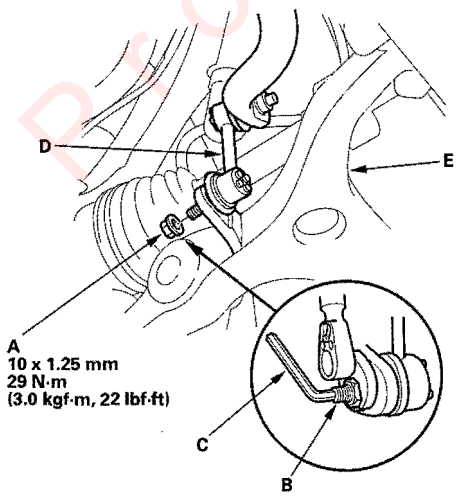

5. Remove the cotter pin (A) from the lower ball joint castle nut (B), then remove the nut.

   NOTE:
   - To avoid damaging the ball joint, install a hex nut on the threads of the ball joint.
   - Be careful not to damage the ball joint boot when installing the remover.
   - Do not force or hammer on the lower arm, or pry between the lower arm and knuckle. You could damage the ball joint.
   - Insert the new cotter pin into the ball joint pin hole from the front to the rear of vehicle, and bend its end as shown.

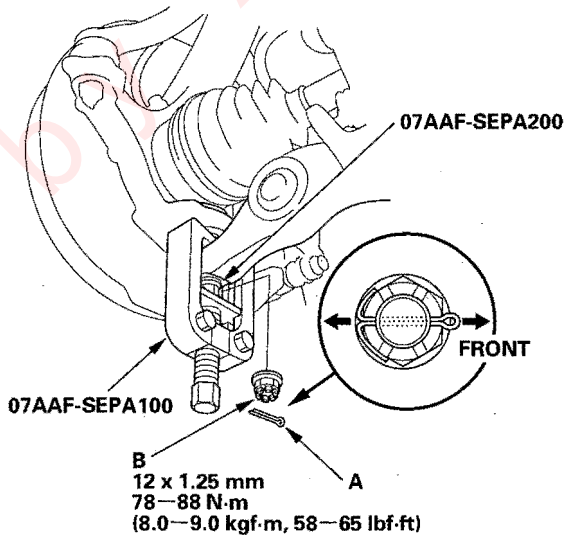

6. Disconnect the lower arm ball joint from the knuckle using the special tools (see page 18-10).

Processed by AP

7. Remove the flange bolts, nuts and washers, then remove the lower arm (A).

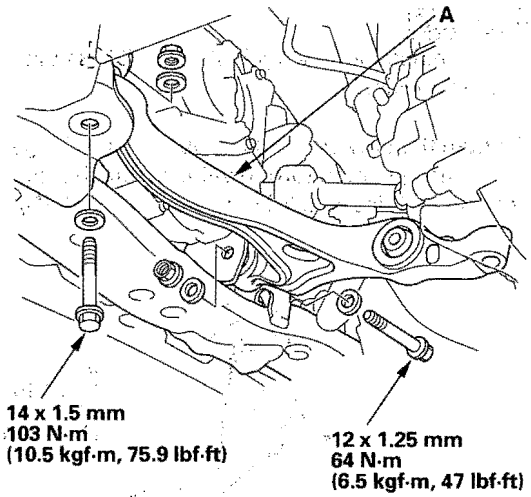

8. Check the collar (A) on the lower arm (B). Replace the lower arm if the collar is loose or damaged.

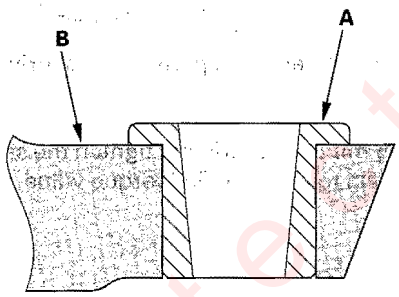

9. Install the lower arm in the reverse order of removal, and note these items:

- Be careful not to damage the ball joint boot when installing the knuckle.
- Tighten all mounting hardware to the specified torque values.
- Before connecting the lower ball joint to the lower arm, degrease the threaded section and tapered portion of the ball joint pin, the lower arm connecting hole, the threaded section and mating surface of the castle nut.
- First install all the components and lightly tighten the bolts and nuts, then raise the suspension to load it with the vehicle's weight before fully tightening to the specified torque values. Do not place the jack against the ball joint pin of the knuckle.
- Torque the castle nut to the lower torque specification, then tighten it only far enough to align the slot with the ball joint pin hole. Do not align the castle nut by loosening it.
- Install a new cotter pin on the castle nut after torquing.
- Before installing the wheel, clean the mating surface of the brake disc and the inside of the wheel.
- Check the wheel alignment, and adjust if necessary (see page 18-5).

Protected by

Stabilizer Link Replacement

1. Raise the front of the vehicle, and support it with safety stands in the proper locations (see page 1-7).
2. Remove the front wheels, taking care not to scratch the calipers on M/T model.
3. Remove the self-locking nut (A) and flange nut (B) while holding the respective joint pin (C) with a hex wrench (D), then remove the stabilizer link (E).

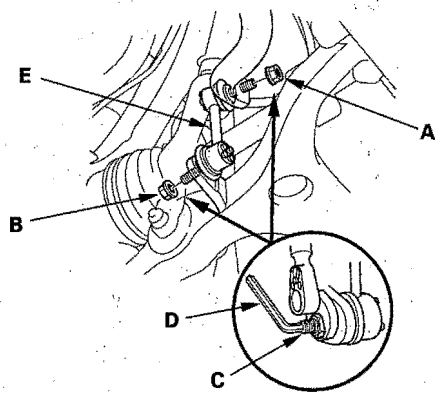

4. Install the stabilizer link (A) on the stabilizer bar (B) and lower arm (C) with the joint pins set at the center of their range of the movement.

   NOTE: The left stabilizer link has a yellow paint mark (D), while the right stabilizer link has a white paint mark.

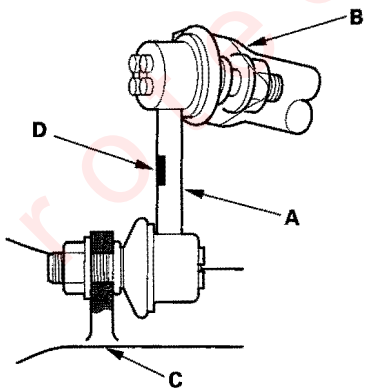

5. Install a new self-locking nut and flange nut, and lightly tighten them.

   NOTE: Use a new self-locking nut on reassembly.

6. Place the floor jack under the lower arm, and raise the suspension to load it with the vehicle's weight.

   NOTICE
   Do not place the jack against the ball joint pin of the knuckle.

7. Tighten the new self-locking nut (A) and flange nut (B) to the specified torque values while holding the respective joint pins (C) with a hex wrench (D).

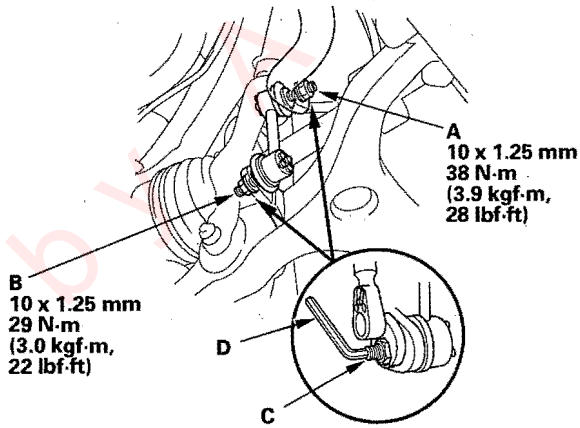

8. Reinstall all removed parts and test drive the vehicle.
9. After 5 minutes of driving, tighten the self-locking nut again to the specified torque value.

Protected by Ka

Stabilizer Bar Replacement

1. Raise the front of the vehicle, and support it with safety stands in the proper locations (see page 1-7).

2. Remove the front wheels, taking care not to scratch the calipers on M/T model.

3. Disconnect the stabilizer links from the stabilizer bar on the right and left sides (see page 18-22).

4. Remove the front suspension subframe (A) from the body (see page 20-156).

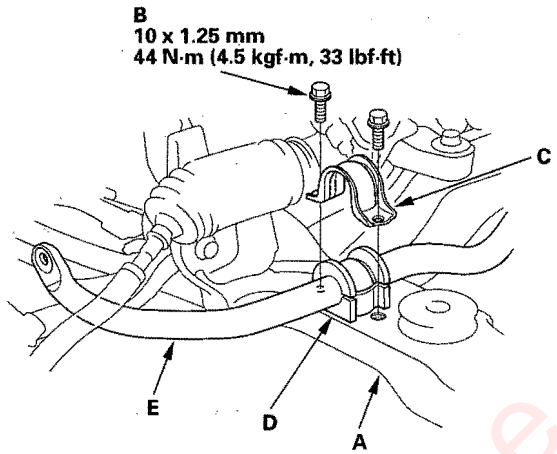

5. Remove the flange bolts (B) and bushing holders (C), then remove the bushings (D) and the stabilizer bar (E).

6. Install the stabilizer bar in the reverse order of removal, and note these items:

   - Note the right and left direction of the stabilizer bar.
   - Do not set the bushing (A) on the bent or curved part of the stabilizer bar (B).
   - Note the fore/aft direction of the bushing holders.
   - Refer to Stabilizer Link Replacement to connect the stabilizer bar to the links (see page 18-22).

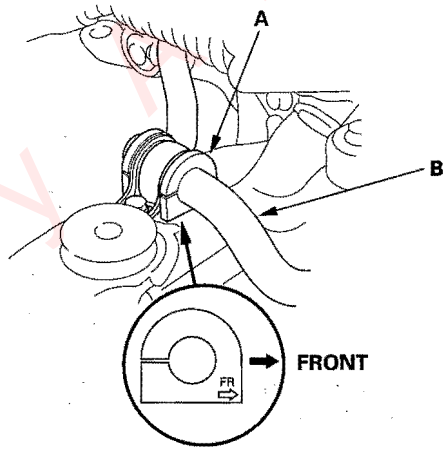

Protected by AR

Damper/Spring Replacement

Exploded View

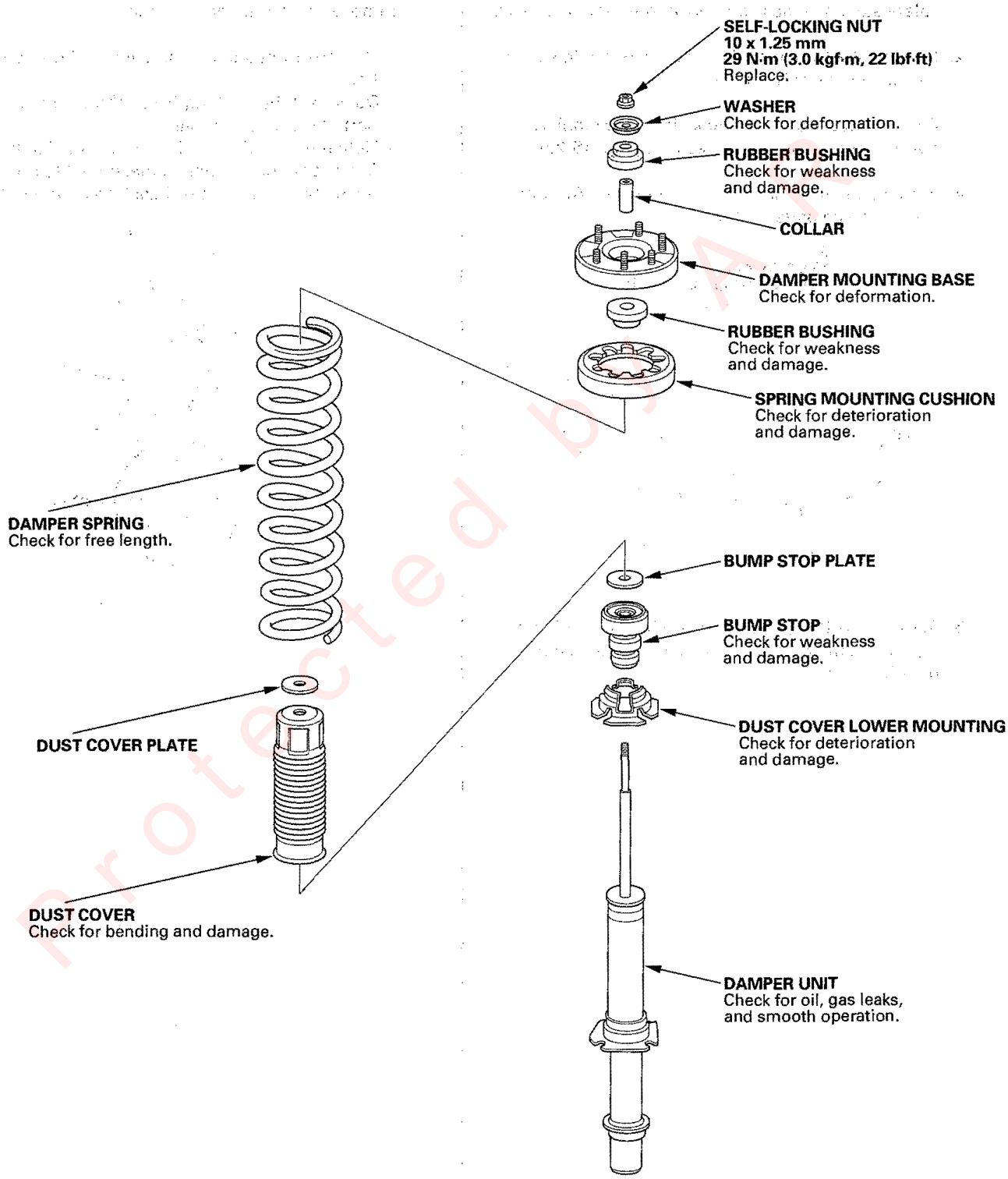

Protected by AA

Special Tools Required
Strut Spring Compressor, Branick MST-580A or Model 7200, or equivalent, commercially available.

Removal

1. Remove the right side engine compartment cover (A), right rear engine compartment cover (B) and left rear engine compartment cover (C).

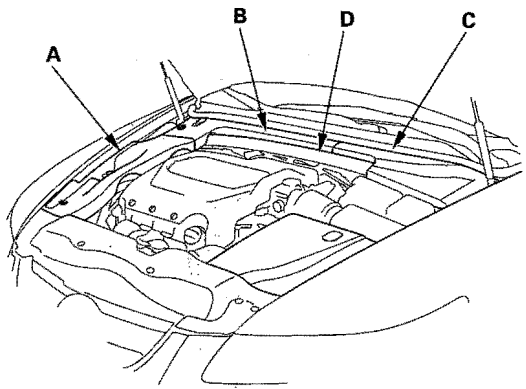

2. Remove the strut brace (D) with the vehicle on the ground (see page 20-123).

3. Raise the front of the vehicle, and support it with safety stands in the proper locations (see page 1-7).

4. Remove the front wheel.

5. Remove the damper fork (A) from the damper (B) and lower arm (C).

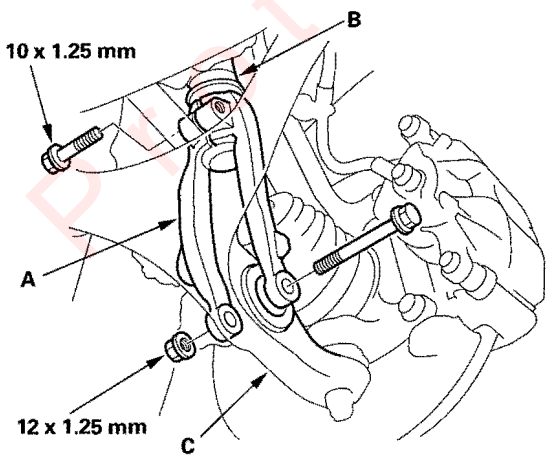

6. Remove the flange nuts (A) from the top of the damper, then remove the damper assembly (B).

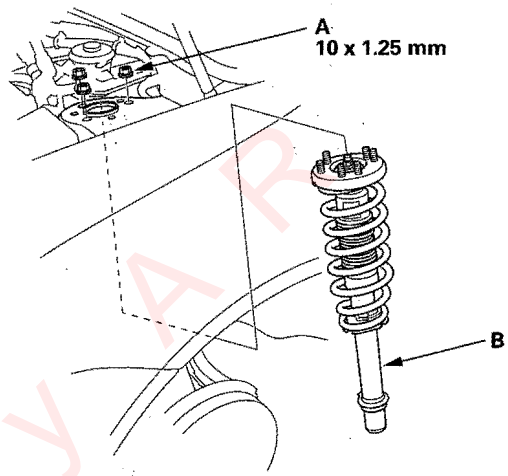

Protected by AR

(cont'd)

Damper/Spring Replacement (cont'd)

Disassembly/Inspection

1. Compress the damper spring with a commercially available strut spring compressor (A) according to the manufacturer's instructions, then remove the self-locking nut (B) while holding the damper shaft with a hex wrench (C). Do not compress the spring more than necessary to remove the nut.

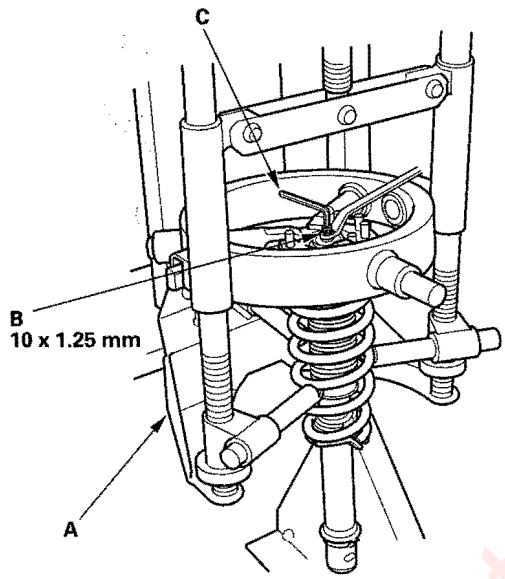

2. Release the pressure from the strut spring compressor, then disassemble the damper as shown in the Exploded View.

3. Reassemble all the parts, except for the spring mounting cushion and spring.

4. Compress the damper assembly by hand, and check for smooth operation through a full stroke, both compression and extension. The damper should extend smoothly and constantly when compression is released. If it does not, the gas is leaking and the damper should be replaced.

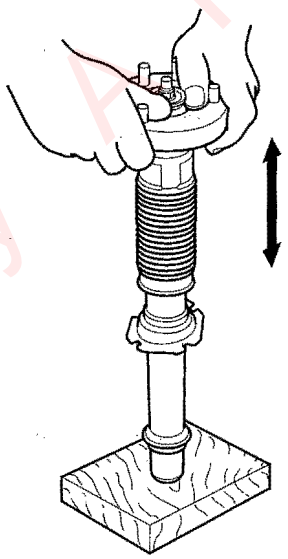

5. Check for oil leaks, abnormal noises, and binding during these tests.

Protected by AP

Reassembly

NOTE: Refer to the Exploded View as needed.

1. Reassemble the damper except for the washer and self-locking nut.
2. Install the damper assembly on a commercially available strut spring compressor (A), and compress the spring lightly.

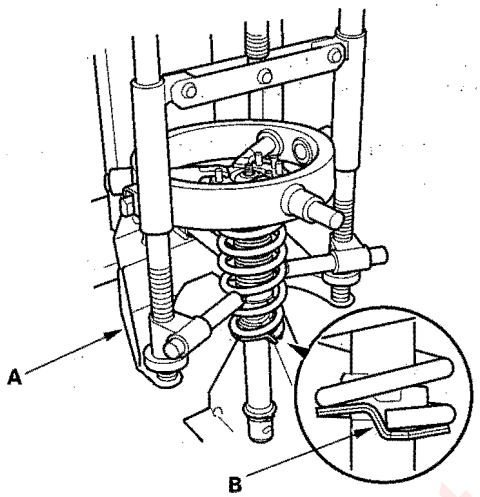

3. Align the bottom of the spring and the stepped part (B) of the lower spring seat.
4. Position the damper mounting base (A) so the stud bolt (B) is aligned with the aligning tab (C) in the damper unit.

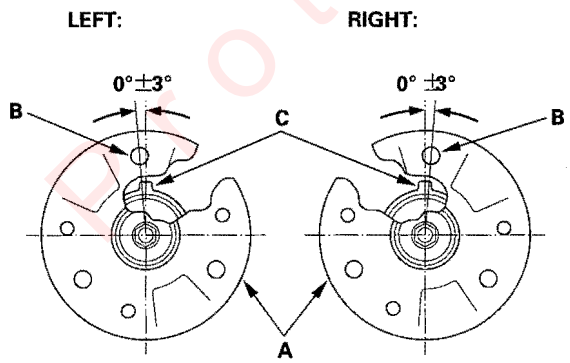

5. Compress the damper spring. Do not compress the spring excessively.
6. Install the washer (A) and a new 10 mm self-locking nut (B). Hold the damper shaft with a hex wench (C), and tighten the 10 mm self-locking nut to the specified torque value.

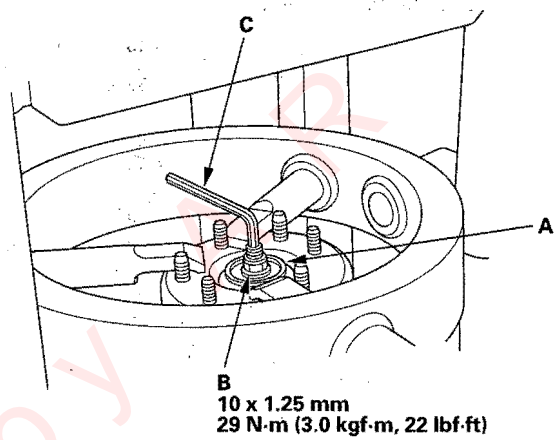

7. Remove the damper assembly from the strut spring compressor.

(cont'd)

Protected by

Damper/Spring Replacement (cont'd)

Installation

1. Position the damper assembly (A) in the body with the aligning tab (B) facing inside, then loosely install the flange nuts.

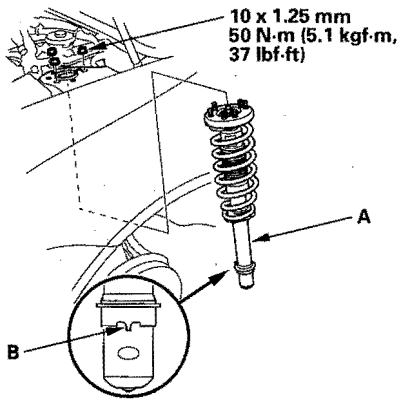

2. Install the damper fork (A) over the driveshaft and onto the lower arm. Install the front damper in the damper fork so the aligning tab (B) is aligned with the slot (C) in the damper fork.

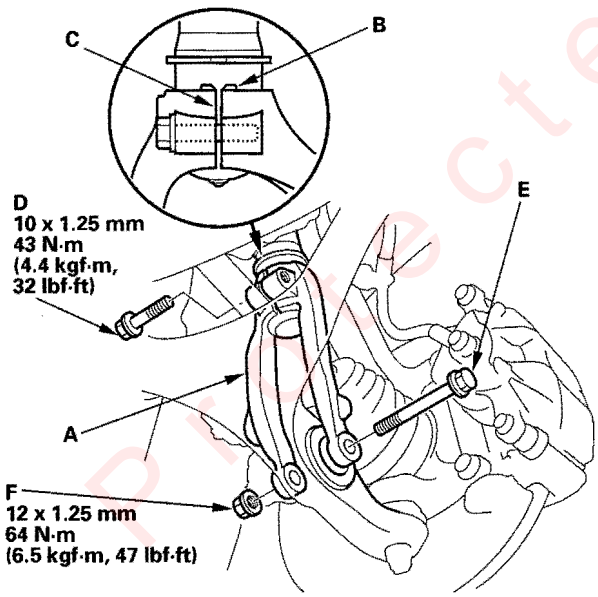

3. Loosely install the damper pinch bolt (D) into the damper fork.

4. Install the flange bolt (E) to the damper fork and lower arm, then lightly tighten the new damper fork mounting nut (F).

   NOTE: Use a new damper fork mounting nut on reassembly.

5. Place the floor jack under the lower arm, and raise the suspension to load it with the vehicle's weight.

6. Tighten the flange nuts on the top of the damper to the specified torque values.

7. Tighten the damper pinch bolts to the specified torque value.

8. Tighten the flange nut on the damper fork to the specified torque value.

9. Clean the mating surface of the brake disc and the inside of the wheel, then install the front wheel.

10. Install the strut brace (A) with the vehicle on the ground (see page 20-123).

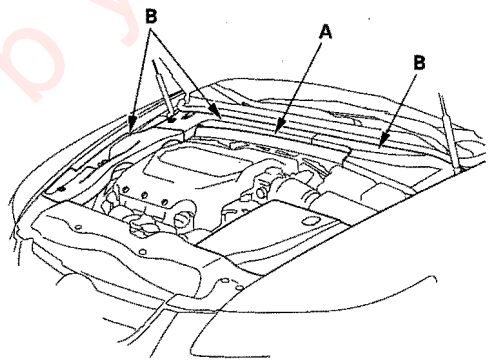

11. Install the engine compartment covers (B).

Protected by A R

Knuckle/Hub Replacement

Exploded View

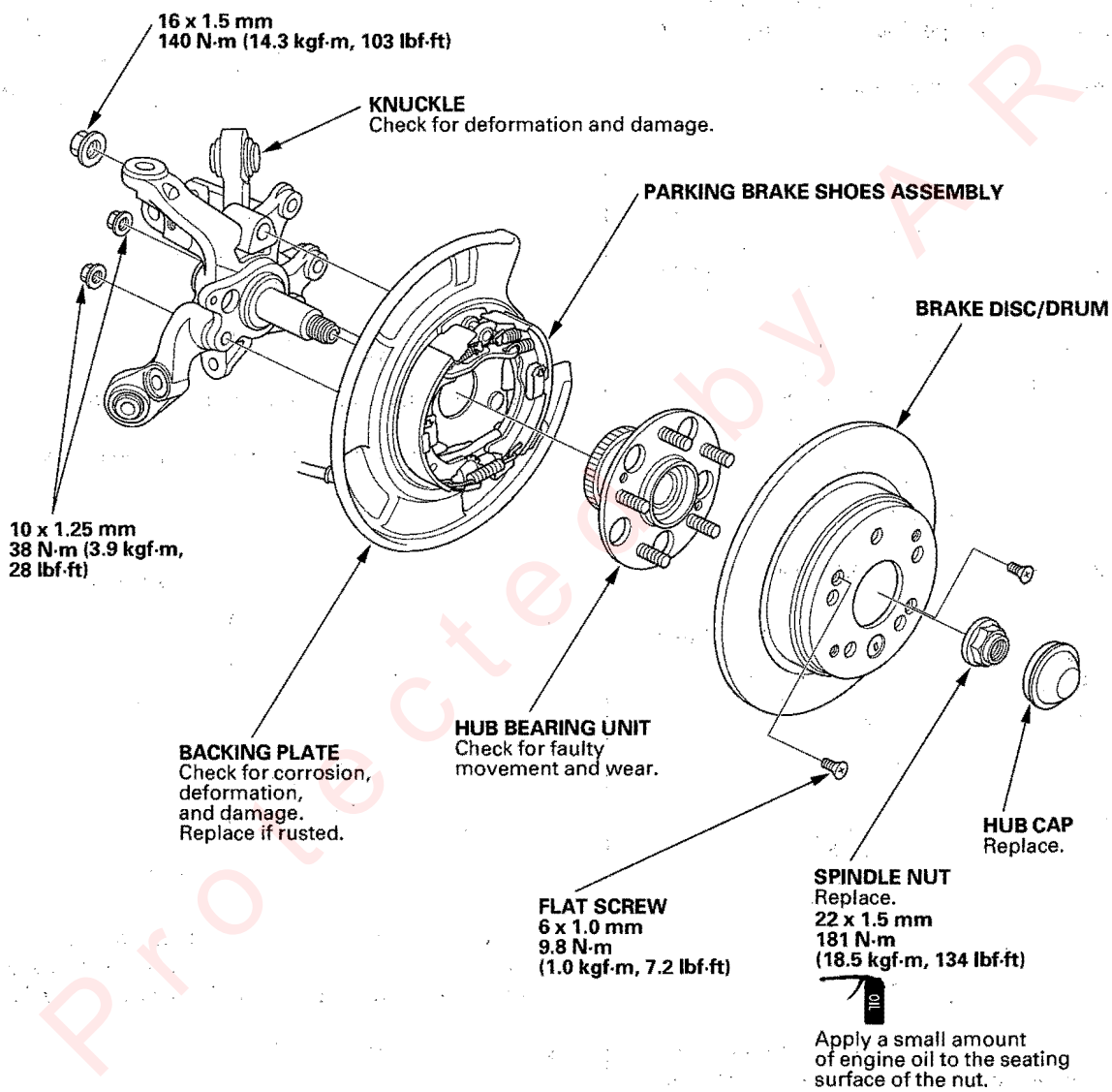

Protected by AR

(cont'd)

Knuckle/Hub Replacement (cont'd)

Special Tools Required
Ball joint remover, 28 mm 07MAC-SL00200

Hub Replacement

1. Raise the rear of the vehicle, and support it with safety stands in the proper locations (see page 1-7).
2. Remove the wheel nuts and rear wheel.

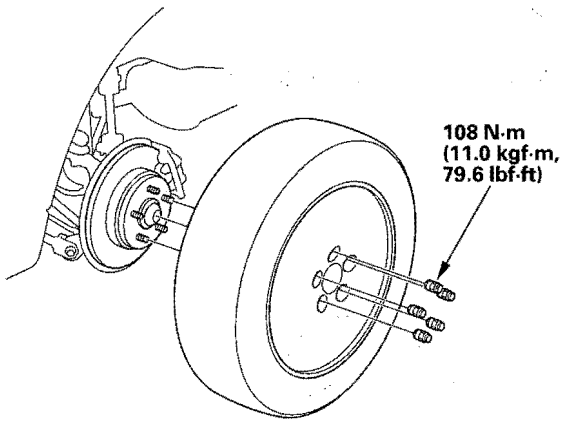

3. Remove the brake hose mounting bracket (A).

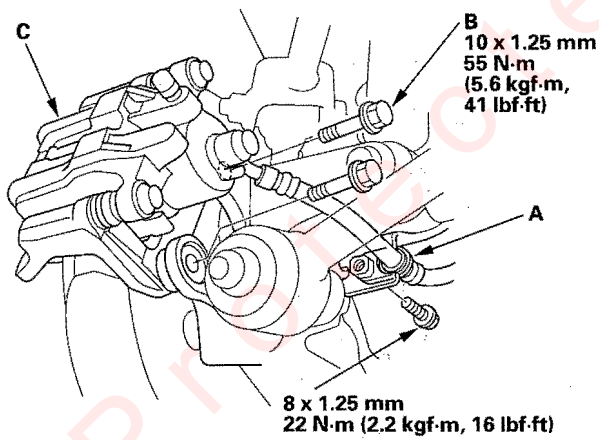

4. Remove the brake caliper bracket mounting bolts (B), and remove the caliper assembly (C) from the knuckle. To prevent damage to the caliper assembly or brake hose, use a short piece of wire to hang the caliper assembly from the undercarriage. Do not twist the brake hose with force.
5. Remove the hub cap (A).

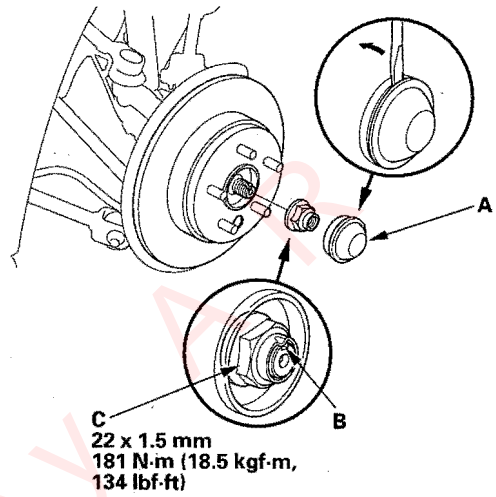

6. Raise the stake (B), then remove the spindle nut (C).
7. Remove the 6 mm brake disc retaining screws (A).

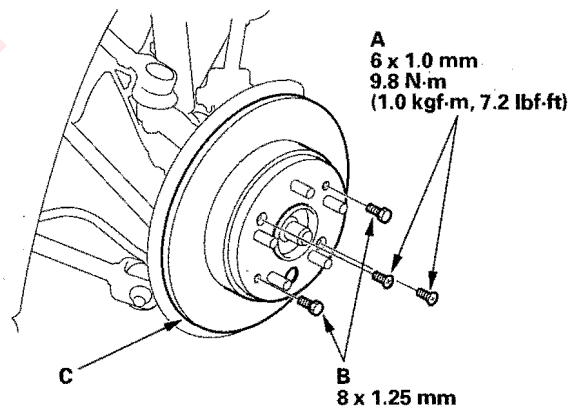

8. Screw two 8 x 1.25 mm bolts (B) into the disc to push it away from the hub. Turn each bolt two turns at a time to prevent cocking the disc excessively.
9. Remove the brake disc/drum (C).

Protected by ARA

10. Remove the hub bearing unit (A).

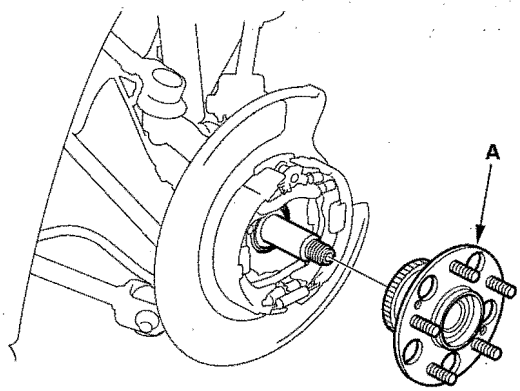

11. Install the hub bearing unit in the reverse order of removal, and note these items:

- Tighten all mounting hardware to the specified torque values.
- Use a new spindle nut on reassembly.
- Wash the spindle thoroughly in high flash point solvent before reassembly.
- Before installing the spindle nut, apply a small amount of engine oil to the seating surface of the nut. After tightening, use a drift to stake the spindle nut shoulder against the driveshaft.
- Before installing the brake disc/drum, clean the mating surfaces of the hub bearing unit and brake disc/drum.
- Before installing the wheel, clean the mating surfaces of the brake disc/drum and the inside of the wheel.
- Check the wheel alignment, and adjust if necessary (see page 18-5).

Protected by AP

(cont'd)

Knuckle/Hub Replacement (cont'd)

Knuckle Replacement

1. Remove the hub bearing unit.
2. Remove the wheel sensor (A) from the knuckle. Do not disconnect the wheel sensor connector.

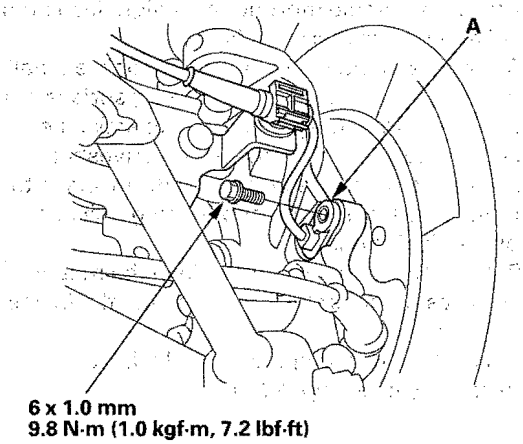

3. Remove the lock pin (A) from the upper arm ball joint, then loosen the nut (B).

   NOTE: During installation, install the new lock pin as shown after tightening the nut.

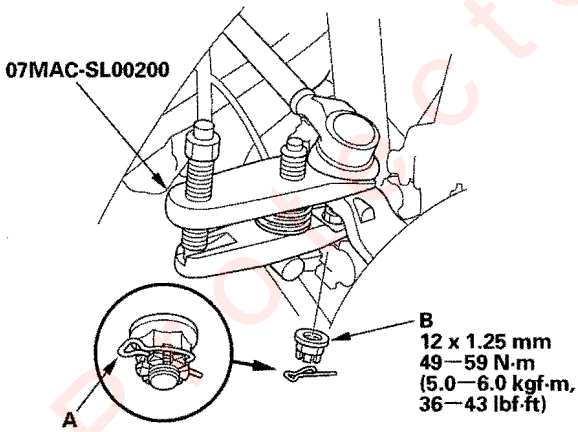

4. Disconnect the upper arm ball joint from the knuckle using the special tool (see page 18-9).
5. Remove the flange nut (A) while holding the joint pin (B) with a hex wrench (C), then disconnect the stabilizer link (D) from the stabilizer link bracket (E).

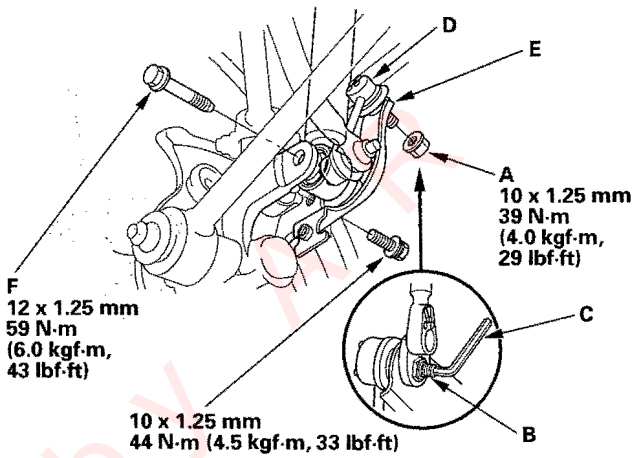

6. Remove the damper lower mounting bolt (F), and disconnect the damper from the knuckle.
7. Remove the bolt and the stabilizer link bracket from the knuckle.

Protected by AIR

8. Remove the control arm mounting nut (A) and washer (B) from the knuckle.

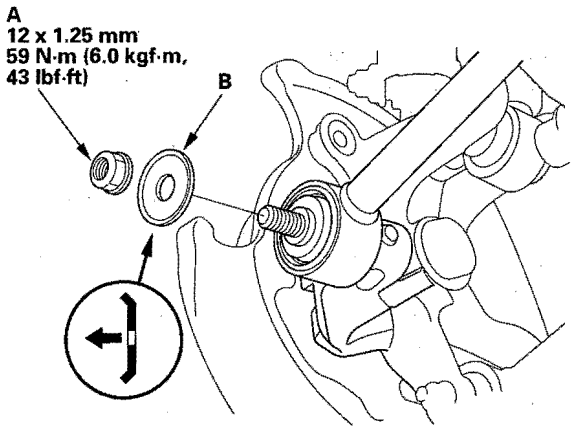

9. Remove the leading arm mounting bolt (A) from the knuckle.

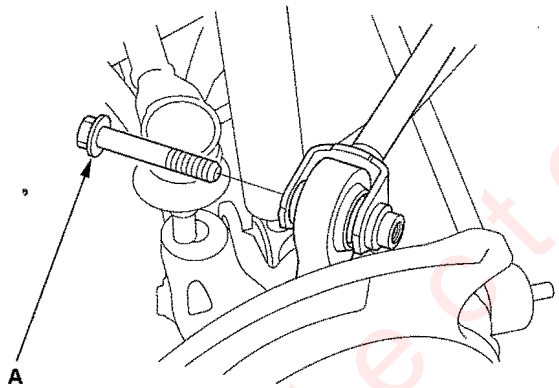

10. Remove the parking brake cable bracket (A).

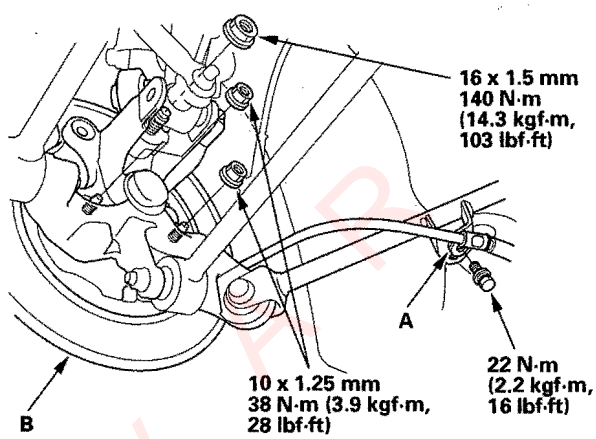

11. Remove the backing plate mounting nuts, then remove the backing plate (B). To prevent damage to the backing plate or parking brake shoes assembly and cable, use a short piece of wire to hang the backing plate from the undercarriage. Do not twist the parking brake cable with force.

(cont'd)

Protected by FSR

Knuckle/Hub Replacement (cont'd)

12. Remove the trailing arm mounting bolt (A) from the knuckle.

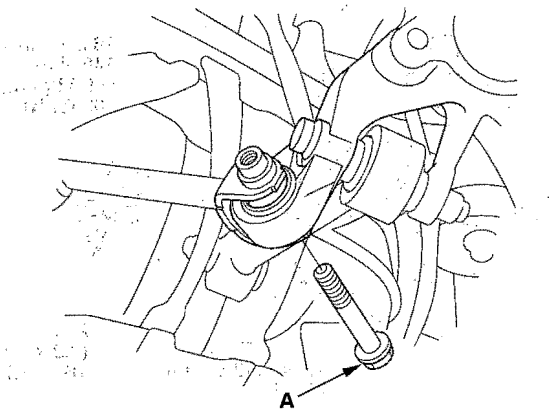

13. Remove the lower arm mounting bolt (A), then remove the knuckle (B).

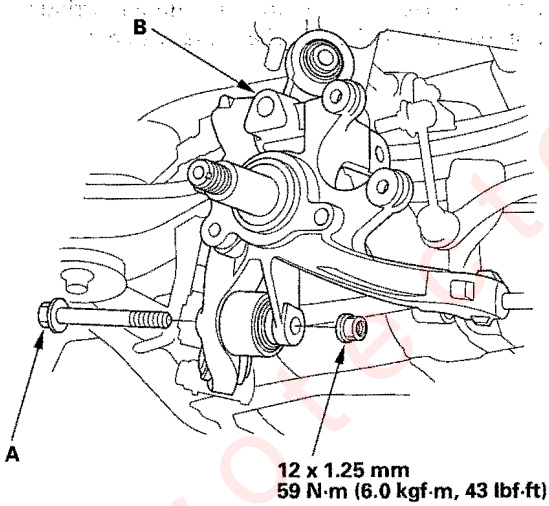

14. Install the knuckle in the reverse order of removal, and note these items:

- Be careful not to damage the ball joint boot when installing the knuckle.
- Tighten all mounting hardware to the specified torque values.
- First install all the components and lightly tighten the bolts and nuts, then raise the suspension to load it with the vehicle's weight before fully tightening to the specified torque values.
- Use a new lower arm mounting nut and control arm mounting nut on reassembly.
- Torque the castle nut to the lower torque specification, then tighten it only far enough to align the slot with the ball joint pin hole. Do not align the castle nut by loosening it.
- Before installing the wheel, clean the mating surface on the brake disc/drum and the inside of the wheel.
- Check the wheel alignment, and adjust if necessary (see page 18-5).

Protected by Copyright

Upper Arm Removal/Installation

Special Tools Required
Ball joint remover, 28 mm 07MAC-SL00200

1. Raise the rear of the vehicle, and support it with safety stands in the proper locations (see page 1-7).
2. Remove the rear wheel.
3. Remove the wheel sensor (A) from the knuckle. Do not disconnect the wheel sensor connector.

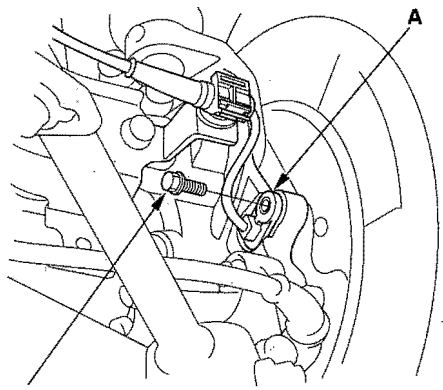

4. Remove the lock pin (A) from the upper arm ball joint, then loosen the nut (B).

   NOTE: During installation, install the new lock pin as shown after tightening the nut.

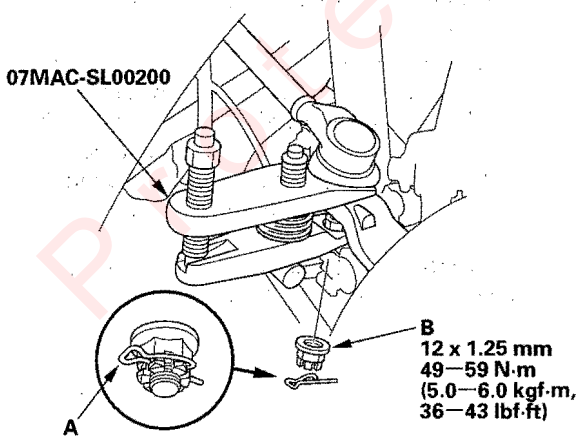

5. Disconnect the upper arm ball joint from the knuckle using the special tool (see page 18-9).
6. Remove the brake hose mounting bracket (A). Do not disconnect the brake line.

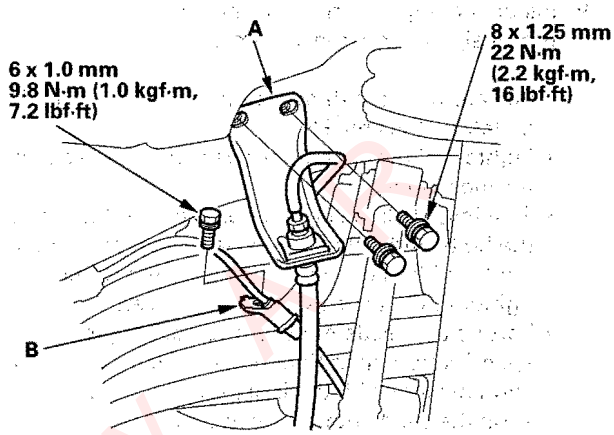

7. Remove the wheel sensor harness mounting bracket (B).
8. Remove the flange bolt (A), then remove the upper arm (B).

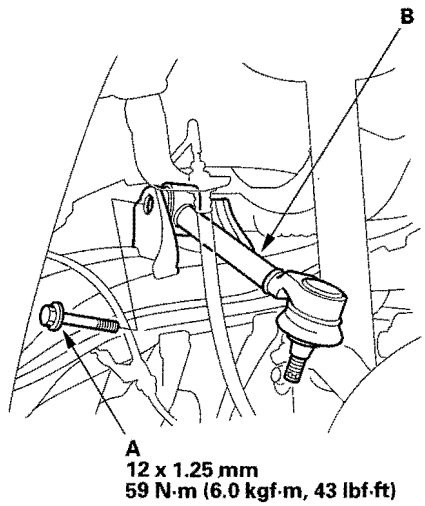

(cont'd)

Protected by Mac

Upper Arm Removal/Installation (cont'd)

9. Install the upper arm in the reverse order of removal, and note these items:

   - Be careful not to damage the ball joint boot when installing the knuckle.
   - Tighten all mounting hardware to the specified torque values.
   - First install all the components and lightly tighten the bolts and nuts, then raise the suspension to load it with the vehicle's weight before fully tightening to the specified torque values.
   - Torque the castle nut to the lower torque specification, then tighten it only far enough to align the slot with the ball joint pin hole. Do not align the castle nut by loosening it.
   - Before installing the wheel, clean the mating surface on the brake disc/drum and inside of the wheel.
   - Check the wheel alignment, and adjust if necessary (see page 18-5).

Lower Arm Replacement

1. Raise the rear of the vehicle, and support it with safety stands in the proper locations (see page 1-7).

2. Remove the rear wheel.

3. Remove the lower arm mounting nut (A) and mounting bolt (B) from the knuckle side.

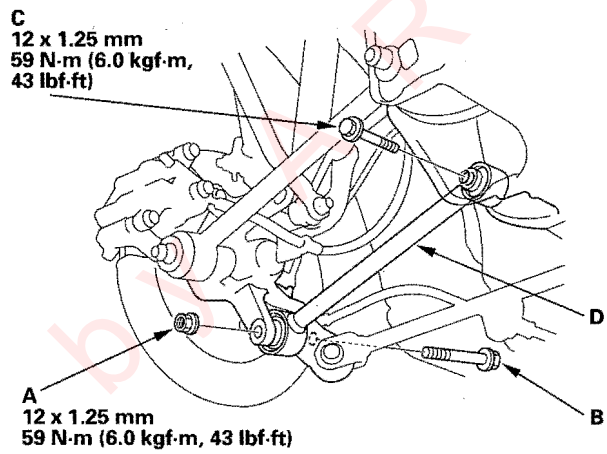

4. Remove the flange bolt (C), then remove the lower arm (D).

5. Install the lower arm in the reverse order of removal, and note these items:

   - Use a new lower arm mounting nut on reassembly.
   - Tighten all mounting hardware to the specified torque values.
   - First install all the components and lightly tighten the bolts and nuts, then raise the suspension to load it with the vehicle's weight before fully tightening to the specified torque values.
   - Before installing the wheel, clean the mating surface on the brake disc/drum and inside of the wheel.
   - Check the wheel alignment, and adjust if necessary (see page 18-5).

Protected by FAXIR

Control Arm Replacement

1. Raise the rear of the vehicle, and support it with safety stands in the proper locations (see page 1-7).
2. Remove the rear wheel.
3. Remove the control arm mounting nut (A) and washer (B) from the knuckle side.

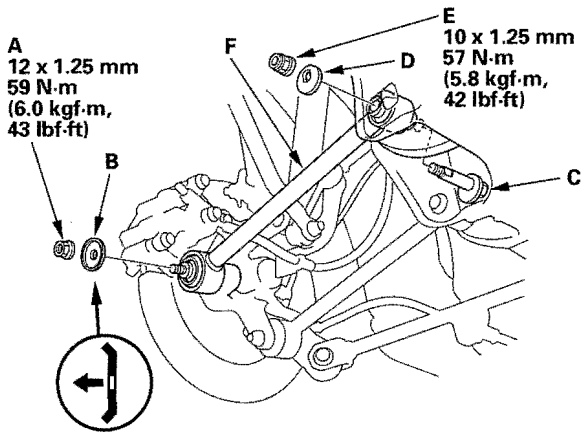

4. Mark the cam positions of the adjusting bolt (C) and adjusting cam (D), then remove the self-locking nut (E), adjusting cam, and adjusting bolt. Discard the self-locking nut and control arm mounting nut.
5. Remove the control arm (F).
6. Install the control arm in the reverse order of removal, and note these items:
   - Align the cam positions of the adjusting bolt and adjusting cam with the marked positions when tightening.
   - Use a new self-locking nut and control arm mounting nut on reassembly.
   - Tighten all mounting hardware to the specified torque values.
   - First install all the components and lightly tighten the bolts and nuts, then raise the suspension to load it with the vehicle's weight before fully tightening to the specified torque values.
   - Before installing the wheel, clean the mating surface on the brake disc/drum and inside of the wheel.
   - Check the wheel alignment, and adjust if necessary (see page 18-5).

Trailing Arm Removal/Installation

1. Raise the rear of the vehicle, and support it with safety stands in the proper locations (see page 1-7).
2. Remove the rear wheel.
3. Remove the parking brake cable bracket (A) from the trailing arm (B).

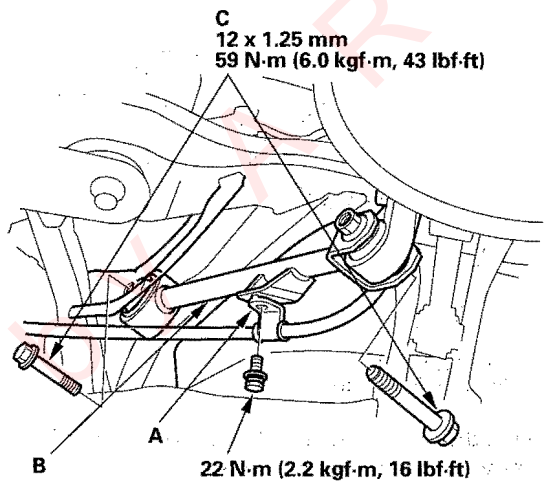

4. Remove the mounting bolts (C), then remove the trailing arm.
5. Install the trailing arm in the reverse order of removal, and note these items:
   - Tighten all mounting hardware to the specified torque values.
   - First install all the components and lightly tighten the bolts and nuts, then raise the suspension to load it with the vehicle's weight before fully tightening to the specified torque values.
   - Before installing the wheel, clean the mating surface on the brake disc/drum and inside of the wheel.
   - Check the wheel alignment, and adjust if necessary (see page 18-5).

Protected by

Leading Arm Replacement

1. Raise the rear of the vehicle, and support it with safety stands in the proper locations (see page 1-7).
2. Remove the rear wheel.
3. Remove the mounting bolts, then remove the leading arm (A).

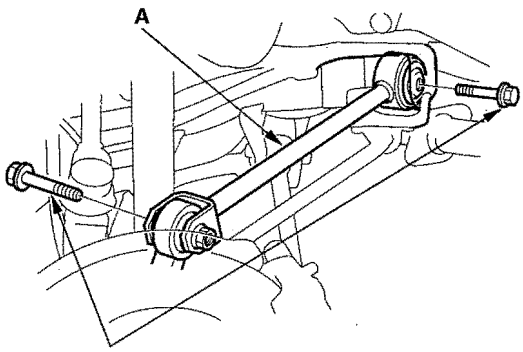

12 x 1.25 mm
59 N·m (6.0 kgf·m, 43 lbf·ft)

4. Install the leading arm in the reverse order of removal, and note these items:

- Tighten all mounting hardware to the specified torque values.
- First install all the components and lightly tighten the bolts and nuts, then raise the suspension to load it with the vehicle's weight before fully tightening to the specified torque values.
- Before installing the wheel, clean the mating surface on the brake disc/drum and inside of the wheel.
- Check the wheel alignment, and adjust if necessary (see page 18-5).

Protected by AR

Stabilizer Link Removal/Installation

1. Raise the rear of the vehicle, and support it with safety stands in the proper locations (see page 1-7).

2. Remove the rear wheels.

3. Remove the self-locking nut (A) and flange nut (B) while holding the respective joint pin (C) with a hex wrench (D), then remove the stabilizer link (E).

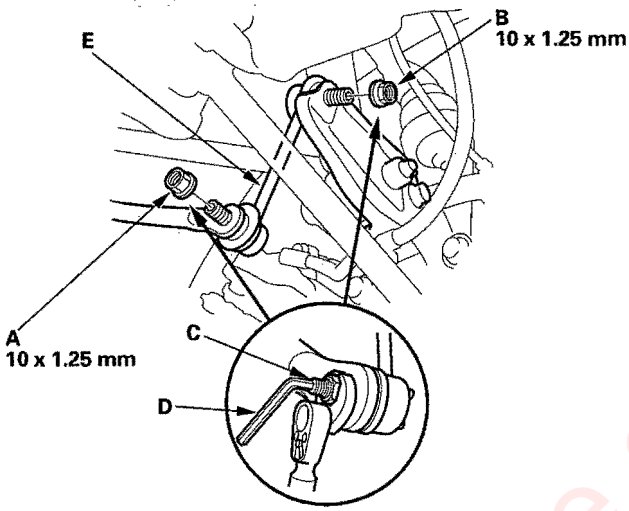

4. Install the stabilizer link (A) on the stabilizer bar (B) and stabilizer link bracket (C) with the joint pins set at the center of their range of the movement.

   NOTE: The left stabilizer link has a yellow paint mark (D), while the right stabilizer link has a white paint mark.

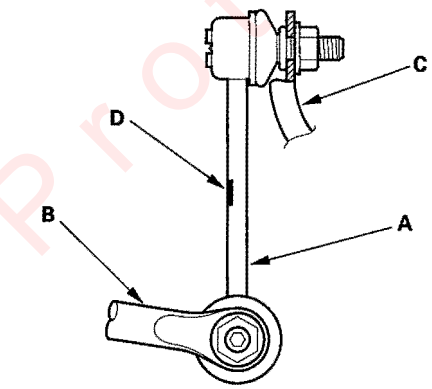

5. Install the new self-locking nut and flange nut, and lightly tighten them.

   NOTE: Use a new self-locking nut on reassembly.

6. Place the floor jack under the knuckle, and raise the suspension to load it with the vehicle's weight.

7. Tighten the self-locking nut (A) and flange nut (B) to the specified torque values while holding the respective joint pins (C) with a hex wrench (D).

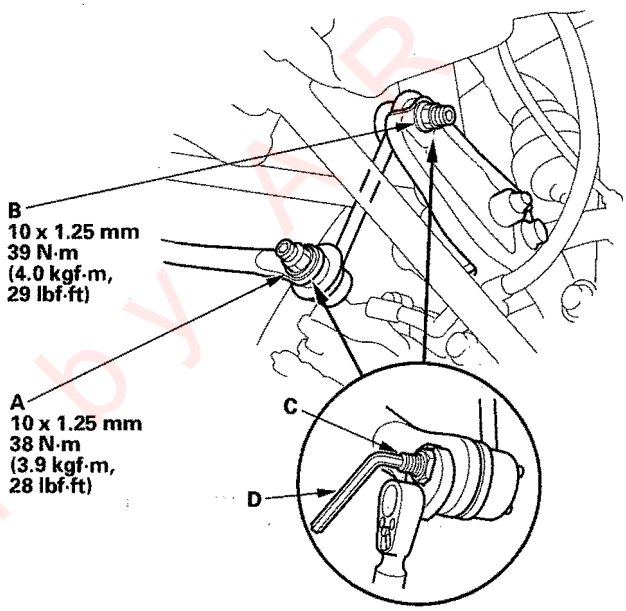

8. Reinstall all removed parts and test drive the vehicle.

9. After 5 minutes of driving, tighten the self-locking nut again to the specified torque value.

Protected by AR

Stabilizer Bar Replacement

1. Raise the rear of the vehicle, and support it with safety stands in the proper locations (see page 1-7).
2. Remove the rear wheels.
3. Disconnect the stabilizer links from the stabilizer bar (A) on the right and left sides (see page 18-39).

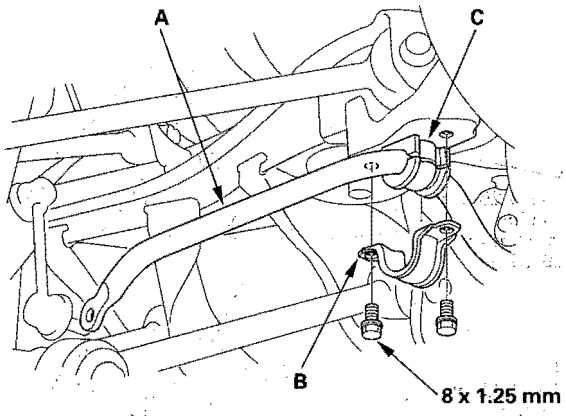

4. Remove the flange bolts and bushing holders (B), then remove the bushing (C) and the stabilizer bar.
5. Install the stabilizer bar in the reverse order of removal, and note these items:
   - Note the right and left direction of the stabilizer bar.
   - Do not set the bushing (A) on the bent or curved part of the stabilizer bar (B).
   - Refer to Stabilizer Link Replacement to connect the stabilizer to the links (see page 18-39).

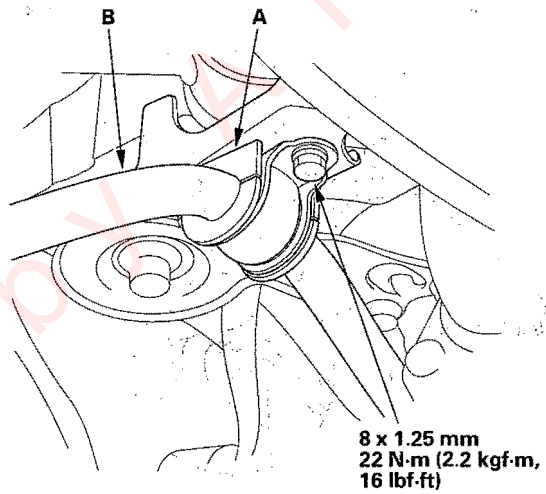

Protected by

Knuckle Bushing Replacement

Special Tools Required
Bushing driver 30 – 40 07NAD-SS00100
or 07NAD-SS00101

1. Position the knuckle (A) on the press with the machined surface (B) facing down.

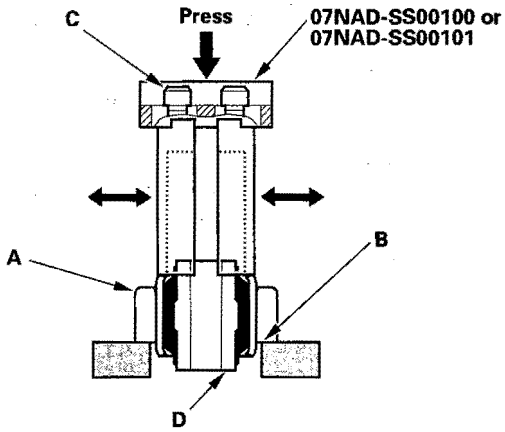

2. Adjust the special tool so it matches the inner diameter of the bushing hole, then tighten the socket bolts (C) securely.

3. Position the special tool on the bushing (D).

4. Remove the bushing by pressing on the special tool with a press as shown.

   NOTE: Be careful not to damage the inside of the bushing hole while pressing on the bushing.

5. Position the knuckle (A) on the press with the machined surface (B) facing up.

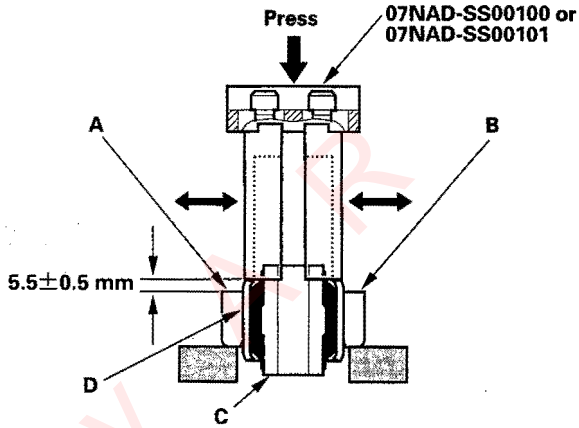

6. Adjust the special tool so it matches with the outer diameter of the bushing (C).

7. Position the special tool on the outer sleeve (D) of the bushing.

8. Press the bushing into the knuckle using the special tool as shown.

Protected by AR

Damper/Spring Replacement

Exploded View

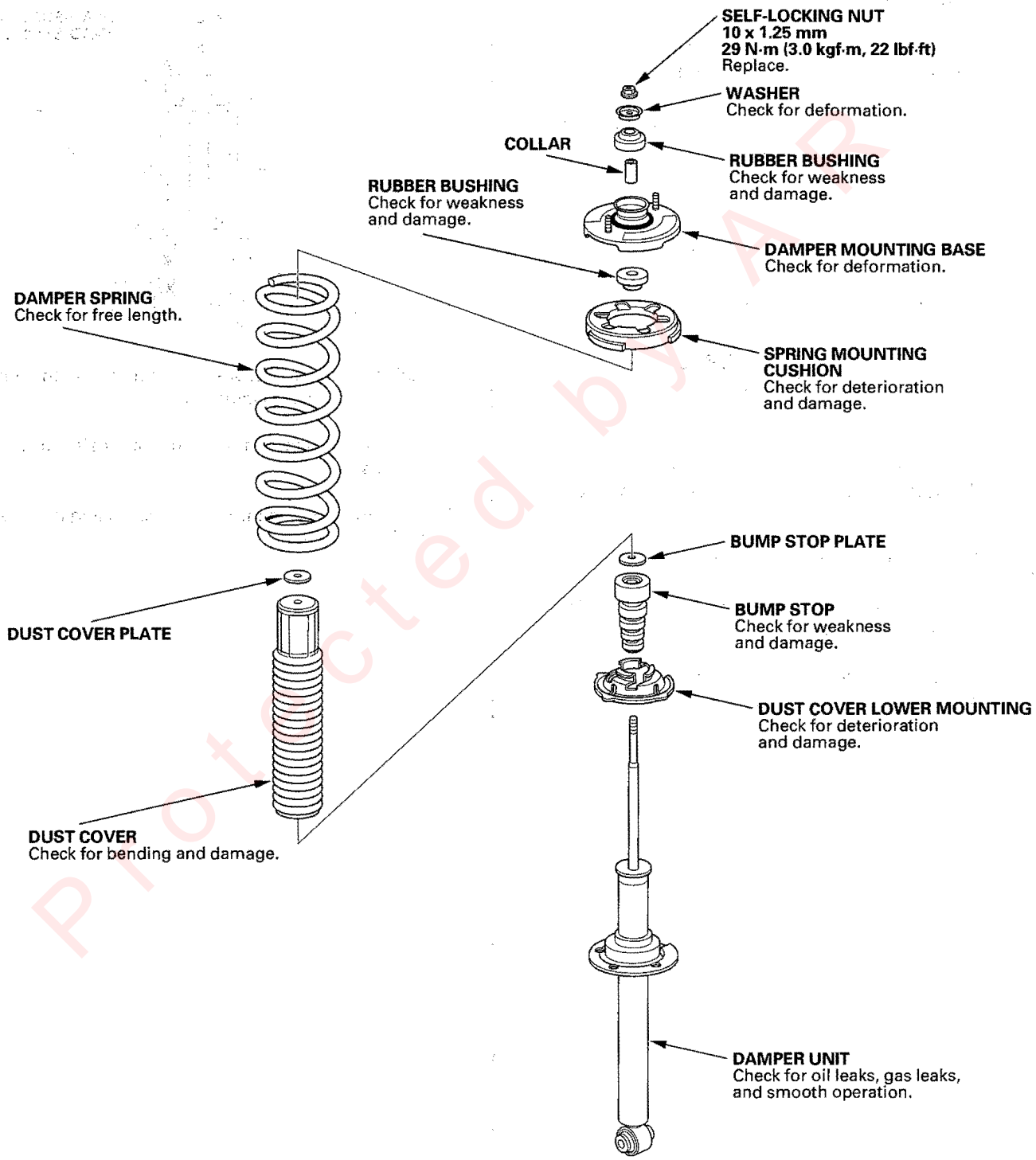

Protected by AR

Special Tools Required
Strut Spring Compressor, Branick MST-580A or Model 7200, or equivalent, commercially available.

Removal

1. Raise the rear of the vehicle, and support it with safety stands in the proper locations (see page 1-7). Remove the rear wheel.

2. Remove the rear shelf (see page 20-66).

3. Remove the two flange nuts (A).

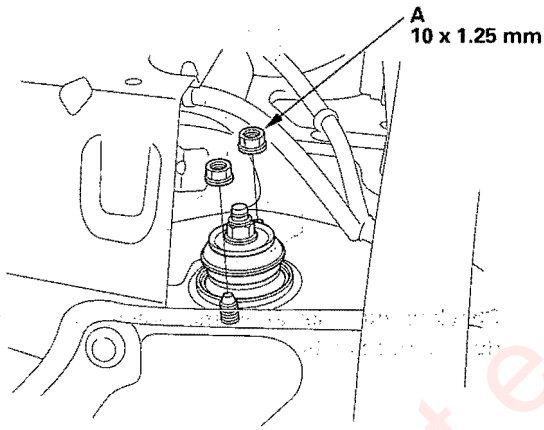

4. Remove the flange nut (A) while holding the joint pin (B) with a hex wrench (C), then disconnect the stabilizer link (D) from the stabilizer link bracket (E).

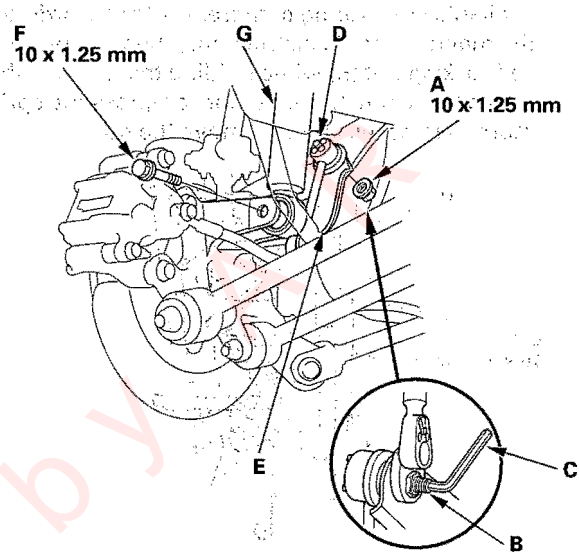

5. Remove the flange bolt (F) from the knuckle.

6. Lower the rear suspension, then remove the damper (G) from the vehicle. Damper springs are different, left and right. Mark the springs L and R before you continue.

(cont'd)

Protected by

Damper/Spring Replacement (cont'd)

Disassembly/Inspection

1. Compress the damper spring with a commercially available strut spring compressor (A) according to the manufacturer's instructions, then remove the self-locking nut (B) while holding the damper shaft with a hex wrench (C). Do not compress the spring more than necessary to remove the nut.

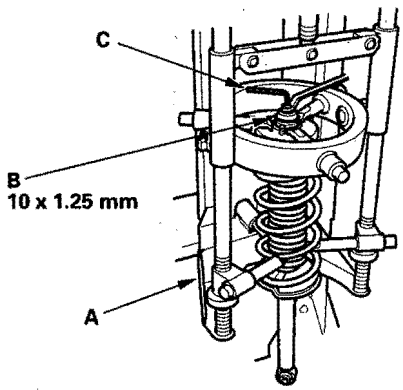

2. Release the pressure from the strut spring compressor, then disassemble the damper as shown in the Exploded View.

3. Reassemble all the parts, except for the spring mounting cushion and spring.

4. Compress the damper assembly by hand, and check for smooth operation through a full stroke, both compression and extension. The damper should extend smoothly and constantly when compression is released. If it does not, the gas is leaking and the damper should be replaced.

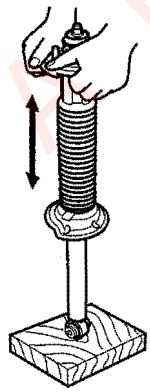

5. Check for oil leaks, abnormal noises, and binding during these tests.

Protected by ARK

Reassembly

1. Install all parts except the self-locking nut and washer onto the damper unit by referring to the Exploded View. Align the bottom of the spring (A) and the stepped part of the lower spring seat (B), and align the damper mounting base (C) as shown.

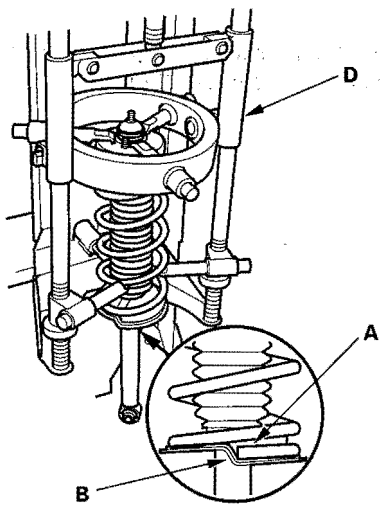

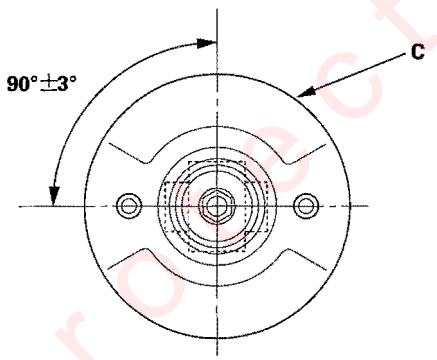

2. Install the damper assembly on a commercially available strut spring compressor (D).

3. Compress the damper spring with the spring compressor.

4. Install the washer (A) and loosely install a new self-locking nut (B).

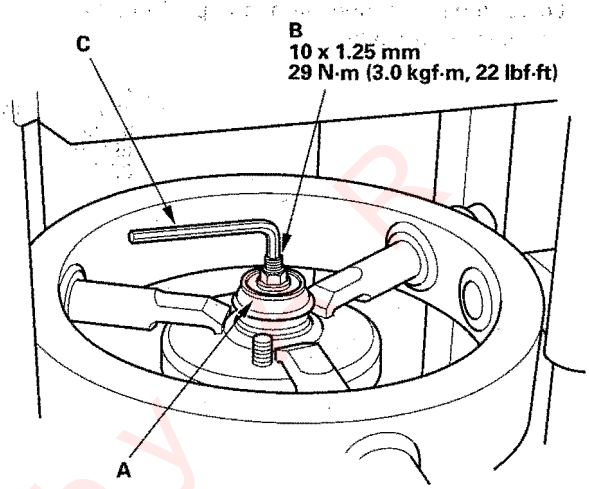

5. Hold the damper shaft with a hex wrench (C), and tighten the self-locking nut to the specified torque value.

(cont'd)

Protected by

Damper/Spring Replacement (cont'd)

Installation

1. Lower the rear suspension, and position the damper (A) in the body.

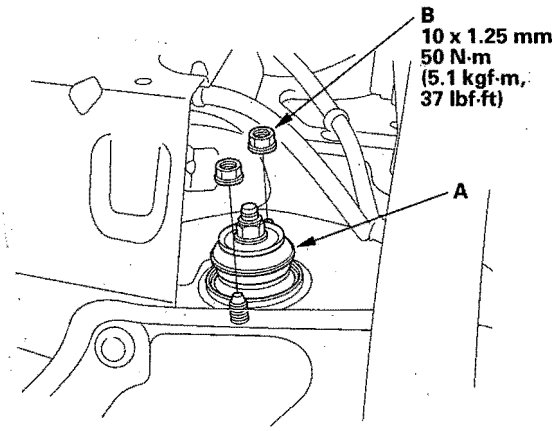

2. Loosely install the flange nuts (B) onto the top of the damper.

3. Loosely install the flange bolt (A) on the bottom of the damper. Connect the stabilizer link (B) on the bracket (C), then loosely install the flange nut (D).

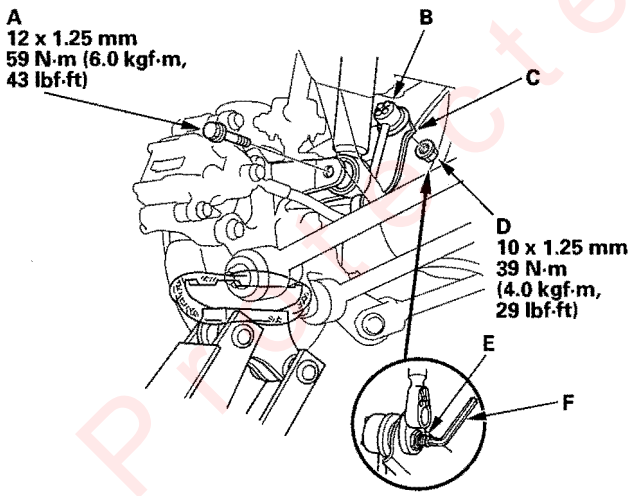

4. Raise the rear suspension with a floor jack to load the vehicle weight, and tighten the flange bolt to the specified torque value.

5. Tighten the flange nut while holding the joint pin (E) with a hex wrench (F).

6. Tighten the two flange nuts on top of the damper to the specified torque value.

7. Install the rear shelf (see page 20-66).

8. Clean the mating surface of the brake disc/drum and the inside of the wheel, then install the rear wheel.

9. Check the rear wheel alignment, and adjust if necessary (see page 18-5).

Protected by AR

Brakes

Conventional Brake Components

Special Tools 19-2
Component Location Index 19-3
Brake System Inspection and Test 19-4
Symptom Troubleshooting 19-5
Brake Pedal and Brake Pedal Position Switch Adjustment 19-6
Parking Brake Check and Adjustment 19-7
Brake System Bleeding 19-9
Brake System Indicator Circuit Diagram 19-11
Parking Brake Switch Test 19-12
Brake Fluid Level Switch Test 19-12
Front Brake Pad Inspection and Replacement 19-13
Front Brake Disc Inspection 19-17
Front Brake Caliper Overhaul 19-18
Master Cylinder Replacement 19-20
Master Cylinder Inspection 19-22
Brake Booster Test 19-22
Brake Booster Replacement 19-24
Rear Brake Pad Inspection and Replacement 19-26
Rear Brake Disc Inspection 19-28
Rear Brake Caliper Overhaul 19-29
Parking Brake Inspection 19-30
Parking Brake Shoe Replacement 19-32
Parking Brake Shoe Lining Break-in 19-35
Brake Pedal Replacement 19-36
Brake Hose and Line Inspection 19-37
Brake Hose Replacement 19-38
Parking Brake Cable Replacement 19-39

VSA (Vehicle Stability Assist) System Components

..... 19-41

Provided by MR

Conventional Brake Components

Special Tools

Ref. No.	Tool Number	Description	Qty
①	07AAE-SEPA100	Brembo Brake Caliper Piston Compressor	1
②	07744-0010300	Pin Driver, 3.5 mm	1

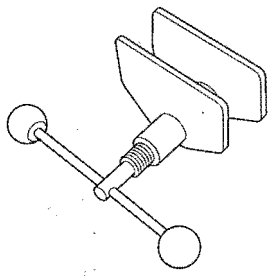

①

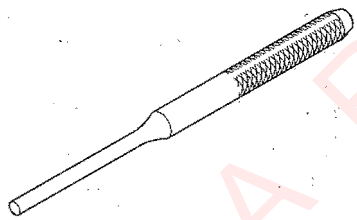

②

Protected by A R

Component Location Index

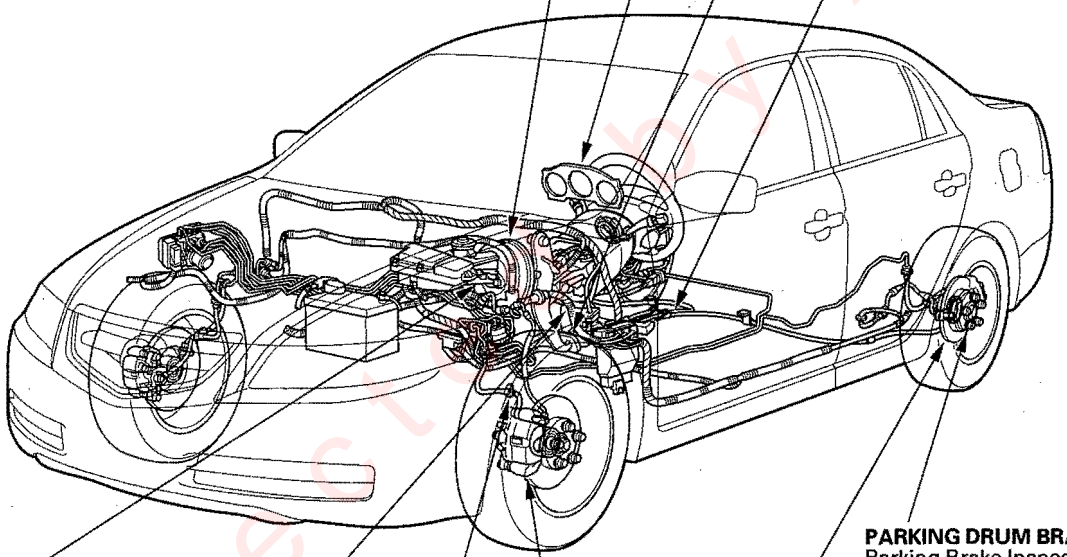

BRAKE BOOSTER
Brake Booster Test, page 19-22
Brake Booster Replacement, page 19-24

BRAKE SYSTEM INDICATOR
Brake System Indicator Circuit Diagram, page 19-11

BRAKE PEDAL
Brake Pedal and Brake Pedal Position Switch Adjustment, page 19-6
Brake Pedal Replacement, page 19-36

PARKING BRAKE CABLE
Parking Brake Cable Replacement, page 19-39

MASTER CYLINDER
Brake System Bleeding, page 19-9
Brake Fluid Level Switch Test, page 19-12
Master Cylinder Replacement, page 19-20

PARKING BRAKE LEVER
Parking Brake Check and Adjustment, page 19-7
Parking Brake Switch Test, page 19-12

BRAKE HOSE and LINE
Brake Hose and Line Inspection, page 19-37
Brake Hose Replacement, page 19-38

FRONT BRAKES
Front Brake Pad Inspection and Replacement, page 19-13
Front Brake Disc Inspection, page 19-17
Front Brake Caliper Overhaul, page 19-18

REAR DISC BRAKE
Rear Brake Pad Inspection and Replacement, page 19-26
Rear Brake Disc Inspection, page 19-28
Rear Brake Caliper Overhaul, page 19-29

PARKING DRUM BRAKE
Parking Brake Inspection, page 19-30
Parking Brake Shoe Replacement, page 19-32
Parking Brake Shoe Lining Break-in, page 19-35

Protected by Mitchell

Brake System Inspection and Test

Component Inspections:

Component	Procedure	Also check for:
Master Cylinder	Look for damage or signs of fluid leakage at: • Reservoir or master cylinder body • Line joints • Between master cylinder and booster	Bulging seal at reservoir cap. This is a sign of fluid contamination.
Brake Hoses	Look for damage or signs of fluid leakage at: • Line joints and banjo bolt connections • Hoses and lines, also inspect for twisting or damage	Bulging, twisted, or bent lines.
Caliper	Look for damage or signs of fluid leakage at: • Piston seal • Banjo bolt connections • Bleeder screw	Seized or sticking caliper pins.
VSA Modulator-Control Unit	Look for damage or signs of fluid leakage at: • Line joints • Modulator	

Brake System Test

Brake pedal sinks/fades when braking

1. Start the engine, and let it warm up to operating temperature.
2. Attach a 50 mm (2 in.) piece of masking tape along the bottom of the steering wheel, and draw a horizontal reference mark across it.
3. With the transmission in Neutral, press and hold the brake pedal lightly (about the same pressure needed to keep an A/T-equipped car from creeping), then release the parking brake.
4. While still holding the brake pedal, hook the end of the tape measure behind it. Then pull the tape up to the steering wheel, noting where the tape measure lines up with the reference mark you made on the masking tape.
5. Apply steady pressure to the brake pedal for 3 minutes.
6. Watch the tape measure.
   - If it moves less than 10 mm (3/8 in.), the master cylinder is OK.
   - If it moves more than 10 mm (3/8 in.) replace the master cylinder.

Protected by AR

Symptom Troubleshooting

Rapid brake pad wear, vehicle vibration (after a long drive), or hard brake pedal

1. Drive the vehicle until the brakes drag or until the pedal is high and hard. This can take 20 or more brake pedal applications during an extended test drive.

2. With the engine running, raise the vehicle on a lift, and spin all four wheels by hand.

   Is there brake drag at any of the wheels?

   YES—Go to step 3.

   NO—Look for other causes of the pad wear, high pedal, or vehicle vibration. ■

3. Turn the engine off, pump the brake pedal to deplete the vacuum in the brake booster, and then spin the wheels again to check for brake drag.

   Is there brake drag at any of the wheels?

   YES—Go to step 4.

   NO—Replace the brake booster. ■

4. Without removing the brake lines, unbolt and separate the master cylinder from the booster, then spin the wheels to check for brake drag.

   Is there brake drag at any of the wheels?

   YES—Go to step 5.

   NO—Check the brake pedal position switch adjustment and pedal free play. ■

5. Loosen the hydraulic lines at the master cylinder, then spin the wheels to check for brake drag.

   Is there brake drag at any of the wheels?

   YES—Go to step 6.

   NO—Replace the master cylinder. ■

6. Loosen the breeder screws at each caliper, then spin the wheels to check for brake drag.

   Is there brake drag at any of the wheels?

   YES—Disassemble and repair the caliper on the wheel(s) with brake drag. ■

   NO—Look for a bulging master cylinder cap seal, discolored or contaminated brake fluid in the master cylinder, or damaged brake lines. If any of these items are damaged, replace them. If all of these items are OK, replace the VSA modulator-control unit. ■

Protected by AR

Brake Pedal and Brake Pedal Position Switch Adjustment

Pedal Height

1. Turn the brake pedal position switch (A) counterclockwise, and pull it back until it is no longer touching the brake pedal.

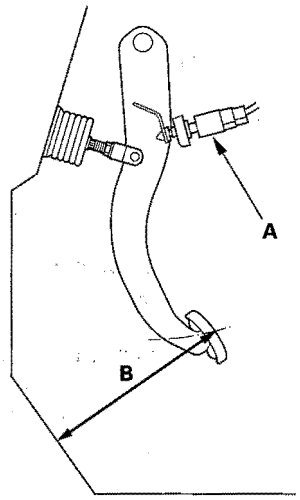

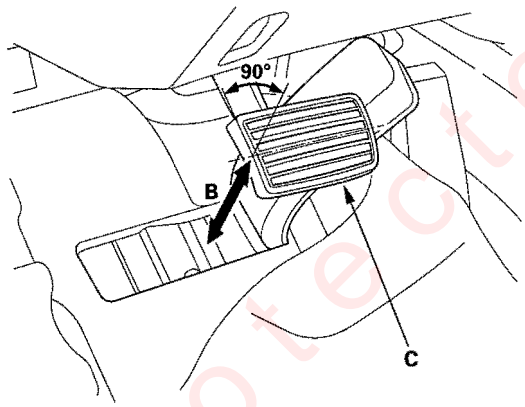

2. Lift up the carpet. At the insulator cutout, measure the pedal height (B) from the left side middle of the pedal pad (C).

Standard pedal height (with carpet removed):
M/T: 171 mm (6 3/4 in.)
A/T: 170 mm (6 11/16 in.)

3. Loosen the pushrod locknut (A), and screw the pushrod in or out with pliers until the standard pedal height from the floor is reached. After adjustment, tighten the locknut firmly. Do not adjust the pedal height with the pushrod pressed.

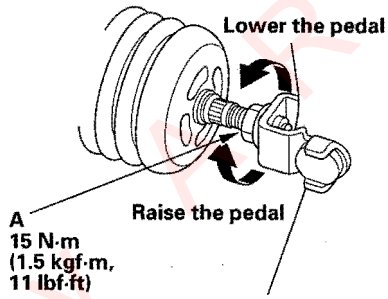

Brake Pedal Position Switch Clearance

4. Push in the brake pedal position switch until its plunger is fully pressed (threaded end (A) touching the pad (B) on the pedal arm). Then, turn the switch 45° clockwise to lock it. The gap between the brake pedal position switch and the pad is automatically adjusted to 0.4 to 3.0 mm (0.016 to 0.118 in.) by locking the switch. Make sure the brake lights go off when the pedal is released.

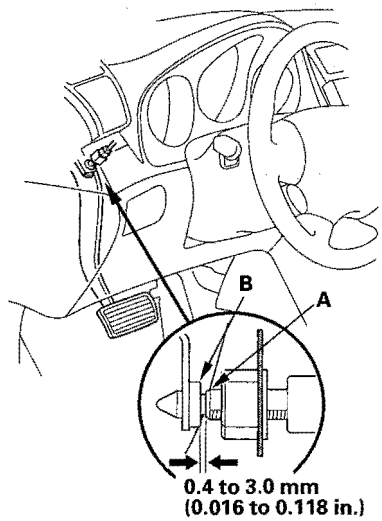

5. Check the brake pedal free play.

Protected by FAR

Pedal Free Play

1. With the engine off, inspect the play (A) on the brake pedal pad (B) by pushing the brake pedal by hand.

   Free play: 1—5 mm (0.04—0.2 in.)

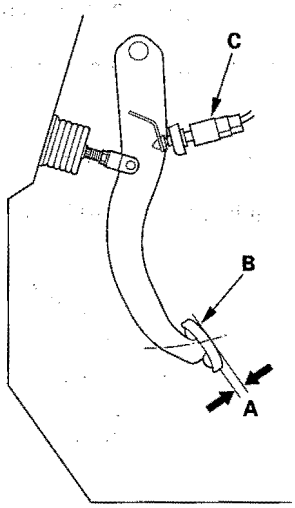

2. If the brake pedal free play is out of specification, adjust the brake pedal position switch (C). If the brake pedal free play is insufficient, it may result in brake drag.

Parking Brake Check and Adjustment

Check

1. Pull the parking brake lever (A) with 196 N (20 kgf, 44 lbf) of force to fully apply the parking brake. The parking brake lever should be locked within the specified number of clicks (B).

   Lever locked clicks: 6 to 10

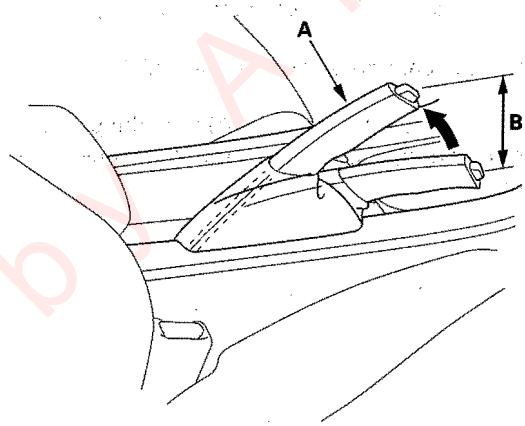

2. Adjust the parking brake if the lever clicks are not within the specification.

   NOTE: Minor parking brake lever adjustments (1 to 2 clicks) can be made with the adjusting nut in the equalizer. If a larger adjustment is required, follow the major adjustment procedure using the adjuster at the parking brake drum.
   After installing new parking brake shoes and/or new brake disc/drum, make sure you drive the vehicle for "break-in" (see page 19-35).

(cont'd)

Protected by AR

Parking Brake Check and Adjustment (cont'd)

Minor Adjustment

1. Raise the rear of the vehicle, and support it with safety stands in the proper locations (see page 1-7).
2. Release the parking brake lever fully.
3. Open the console boxlid then remove the console mat.
4. Remove the lid to access the adjusting nut.
5. Pull the parking brake lever one click.
6. Tighten the adjusting nut (A) until the parking brakes drag slightly when the rear wheels are turned.

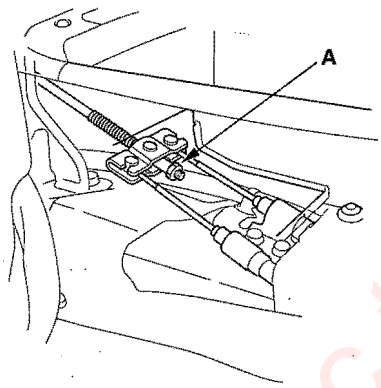

7. Release the parking brake lever fully, and check that the parking brakes do not drag when the rear wheels are turned. Readjust if necessary.
8. Make sure the parking brakes are fully applied when the parking brake lever is pulled all the way.
9. Reinstall the center console lid and console mat.

Major Adjustment (to be done when replacing parking brake shoes and after lining surface break-in)

1. Raise the rear of the vehicle, and support it with safety stands in the proper locations (see page 1-7).
2. Release the parking brake lever fully.
3. Open the console boxlid then remove the console mat.
4. Remove the lid to access the adjusting nut.
5. Back off the adjusting nut (A) in the equalizer.

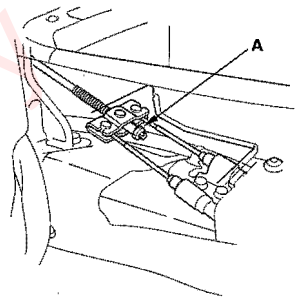

6. Remove the rear wheels.
7. Remove the access plug (A).

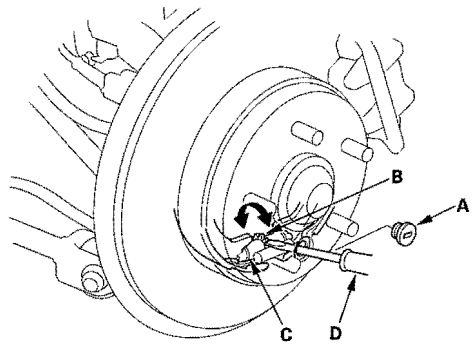

8. Turn the ratchet teeth (B) on the adjuster assembly (C) with a flat-tip screwdriver (D) until the shoes lock against the parking brake drum. Then back off the adjuster 8 clicks, and install the access plug.
9. Do the minor adjustment procedure.
10. Install the rear wheels.
11. Reinstall the center console lid and console mat.

Protected by A R

Brake System Bleeding

NOTE:
- Do not reuse the drained fluid. Use only clean Honda DOT 3 Brake Fluid from an unopened container. Using a non-Honda brake fluid can cause corrosion and shorten the life of the system.
- Make sure no dirt or other foreign matter is allowed to contaminate the brake fluid.
- Do not spill brake fluid on the vehicle, it may damage the paint; if brake fluid does contact the paint, wash it off immediately with water.
- The reservoir on the master cylinder must be at the MAX (upper) level mark at the start of the bleeding procedure and checked after bleeding each brake caliper. Add fluid as required.
- Front caliper for the M/T model (4-piston caliper type); do this by first bleeding the outside piston of the front caliper. Then bleed the inside piston of the front caliper.

1. Make sure the brake fluid level in the reservoir is at the MAX (upper) level line (A).

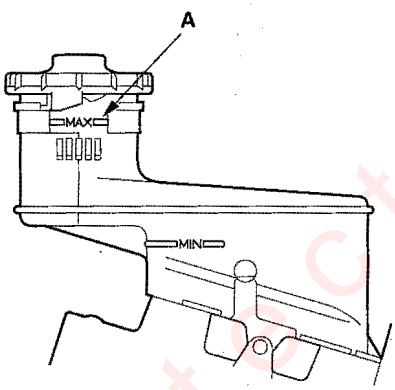

2. Attach a length of clear drain tube to the bleed screw.

3. Have someone slowly pump the brake pedal several times, then apply steady pressure.

4. Loosen the left-front brake bleed screw, loosen the brake bleed screw to allow air to escape from the system. Then tighten the bleeder screw securely.

   NOTE:
   - The bleeder valve uses an 11 mm hex wrench on M/T model.
   - On M/T model, bleed the outside piston of the front caliper first, then bleed the inside piston.

5. Repeat the procedure for each wheel in the sequence shown following until air bubbles no longer appear in the fluid.

BLEEDING SEQUENCE:

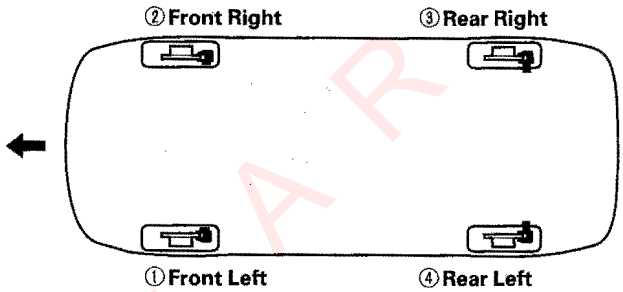

FRONT:

A/T model

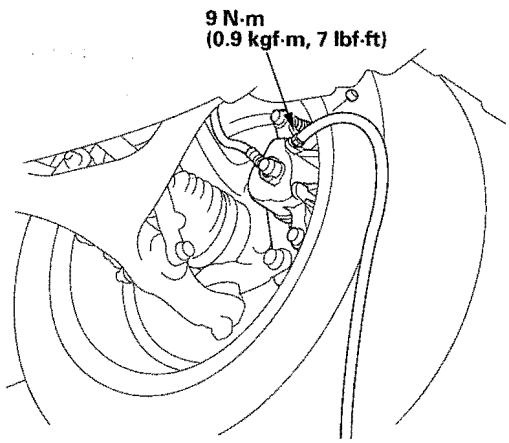

Protected by A R

(cont'd)

Brake System Bleeding (cont'd)

M/T model

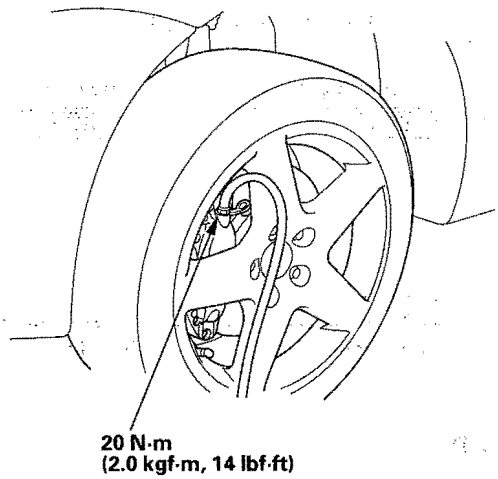

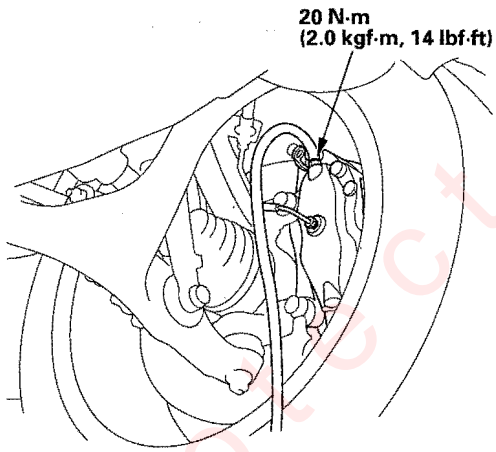

REAR:

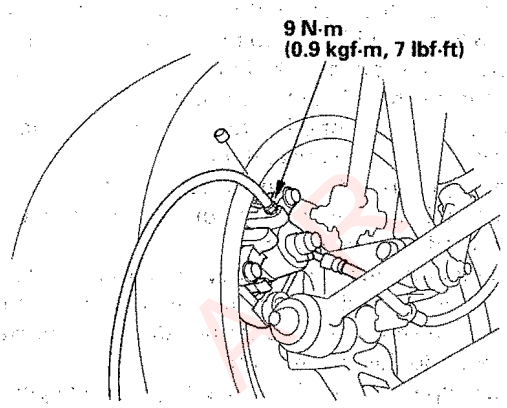

6. Refill the master cylinder reservoir to the MAX (upper) level line (A).

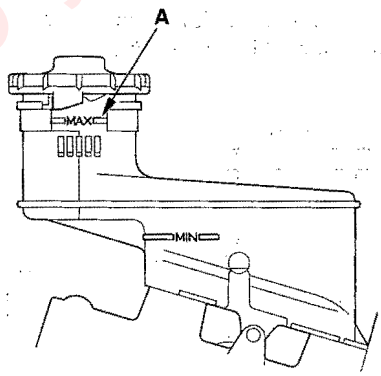

7. Test drive the vehicle and make at least two slow ABS activating stops.

8. Check for pedal feel.

   - If the pedal feel is hard, you are done.
   - If the pedal feel is soft, repeat the brake system bleeding procedure.

Protected by M

Brake System Indicator Circuit Diagram

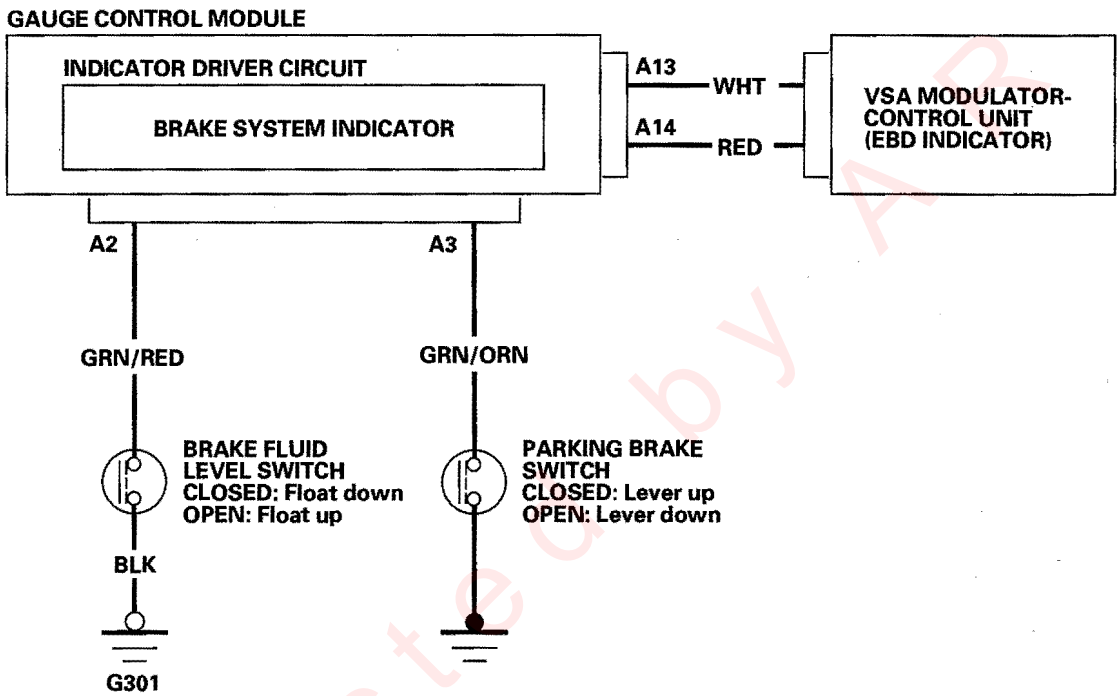

Protected by AR

Parking Brake Switch Test

1. Remove the center console rear section (see page 20-78).

2. Disconnect the connector (A) from the parking brake switch (B).

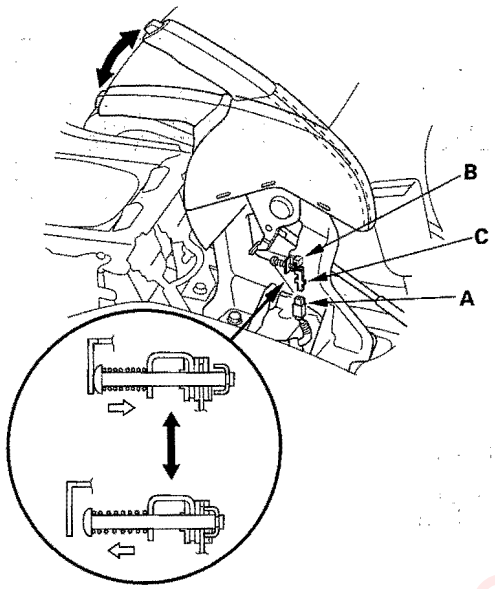

3. Check for continuity between the positive terminal (C) and body ground:

   - With the parking brake lever pulled, there should be continuity.
   - With the parking brake lever released, there should be no continuity.

Brake Fluid Level Switch Test

Check for continuity between the terminals (1) with the float in the down position and in the up position.

- Remove the brake fluid completely from the reservoir. With the float down, there should be continuity.
- Fill the reservoir with brake fluid to the MAX (upper) level (A). With the float up, there should be no continuity.

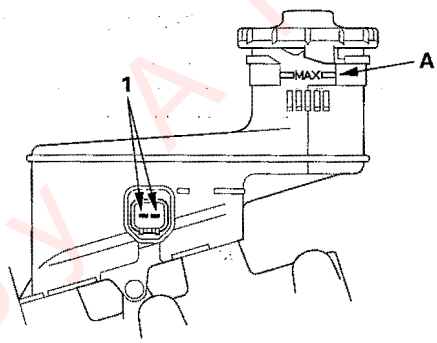

Protected by AR

Front Brake Pad Inspection and Replacement

Special Tools Required
- Brembo brake caliper piston compressor 07AAE-SEPA100
- Pin driver, 3.5 mm 07744-0010300

⚠CAUTION

Frequent inhalation of brake pad dust, regardless of material composition, could be hazardous to your health.
- Avoid breathing dust particles.
- Never use an air hose or brush to clean brake assemblies. Use an OSHA-approved vacuum cleaner.

Inspection

NOTE: Due to the high performance nature of the brake system on M/T model, the rotors and pads may wear faster than on A/T model. Be sure to inspect the front rotor thickness anytime the front pads are replaced.

1. Raise the front of the vehicle, and support it with safety stands in the proper locations (see page 1-7). Remove the front wheels. Take care not to scratch the calipers (M/T model).

2. Remove the brake pads.

3. Check the thickness of the brake pads (A). Do not include the thickness of the brake pad backing plate (B).

Brake pad thickness:
Standard:
A/T model: 10.3—11.0 mm (0.41—0.43 in.)
M/T model (4-piston caliper type):
8.8—10.0 mm (0.35—0.39 in.)
Service limit: 1.6 mm (0.06 in.)

A/T model

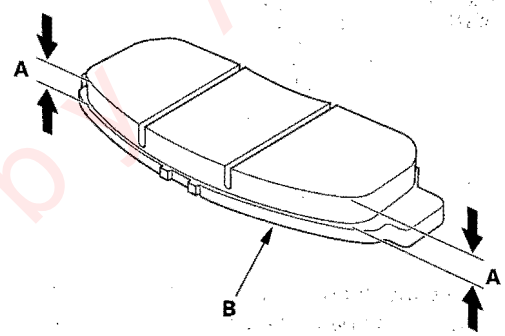

M/T model (4-piston caliper type)

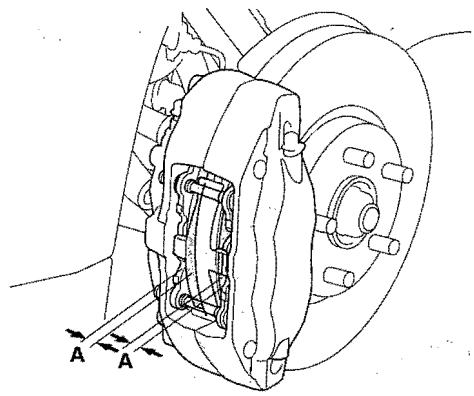

4. If the brake pad thickness is less than the service limit, replace all the brake pads as a set.

(cont'd)

Protected by A

Front Brake Pad Inspection and Replacement (cont'd)

Replacement: A/T model

1. Raise the front of the vehicle, and support it with safety stands in the proper locations (see page 1-7). Remove the front wheels.

2. Remove the brake hose mounting bolts (A).

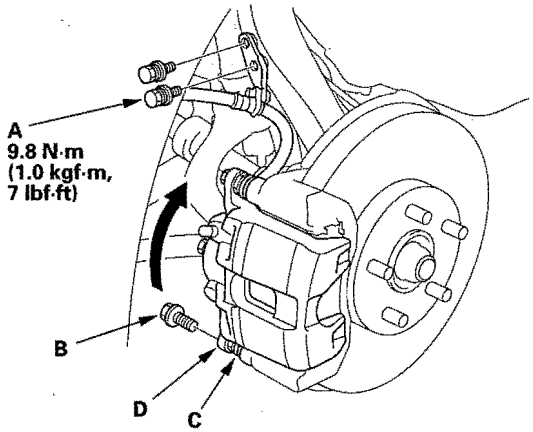

3. Remove the flange bolt (B) while holding the pin (C) with a wrench being careful not to damage the pin boot, and pivot the caliper (D) up out of the way. Check the hose and pin boots for damage and deterioration.

4. Remove the pad shims (A) and the brake pads (B).

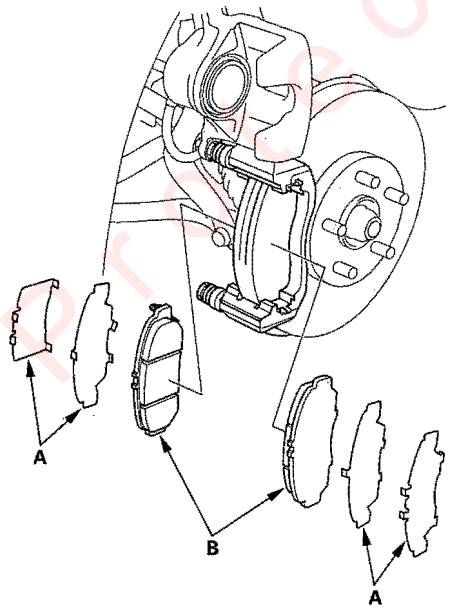

5. Remove the pad retainers (A).

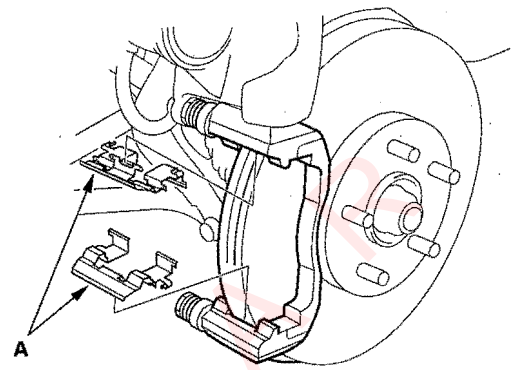

6. Clean the caliper thoroughly; remove any rust, and check for grooves and cracks.

7. Check the brake disc for damage and cracks.

8. Clean and install the pad retainers.

9. Apply Molykote M77 grease (P/N 08798-9010) to the brake pad side of inner pad shim A, inner pad shim B, both sides of the outer pad shim C, outer pad shim D the back of the brake pads (E), and to the other areas indicated by the arrows. Wipe excess grease off the shims and the brake pads. Contaminated brake discs or pads reduce stopping ability. Keep grease off the brake discs and pads.

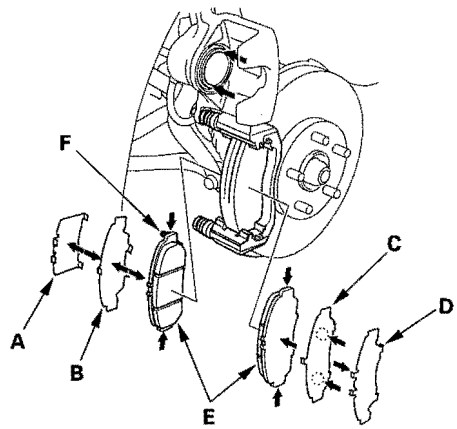

10. Install the brake pads and pad shims correctly. Install the brake pad with the wear indicator (F) on the upper-inside.
If you are reusing the brake pads, always reinstall the brake pads in their original positions to prevent a momentary loss of braking efficiency.

Projected by AP

11. Push in the piston (B) so the caliper will fit over the brake pads. Make sure the piston boot is in position to prevent damaging it when pivoting the caliper down.

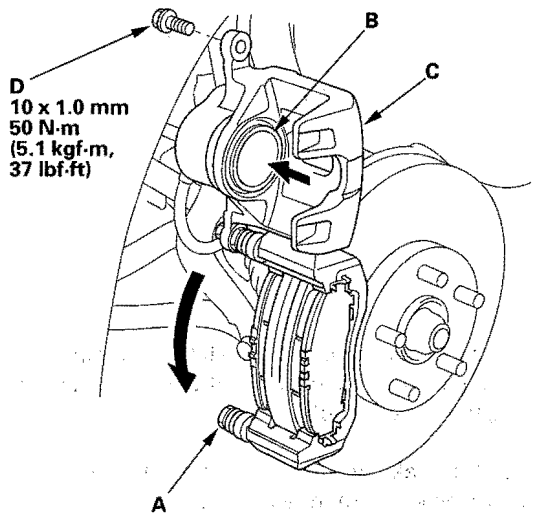

12. Pivot the caliper (C) down into position. Install the flange bolt (D), and torque it to the specified torque while holding the pin A with a wrench being careful not to damage the pin boot.

13. Install the brake hose mounting bolts, and tighten them to the specified torque.

14. Press the brake pedal several times to make sure the brakes work, then test-drive the vehicle.

    NOTE: Engagement of the brake may require a greater pedal stroke immediately after the brake pads have been replaced as a set. Several applications of the brake pedal will restore the normal pedal stroke.

15. After installation, check for leaks at hose and line joints or connections, and retighten if necessary.

16. Reinstall the front wheels.

Replacement: M/T model (4-piston caliper type)

NOTE: Due to the high performance nature of the brake system on M/T model, the rotors and pads may wear faster than on A/T model. Be sure to inspect the front rotor thickness anytime the front pads are replaced.

1. Raise the front of the vehicle, and support it with safety stands in the proper locations (see page 1-7). Remove the front wheels. Take care not to scrach the calipers.

2. Remove the pad pins (A) using the special tool from the outside to the inside of vehicle, and remove the pad spring (B).

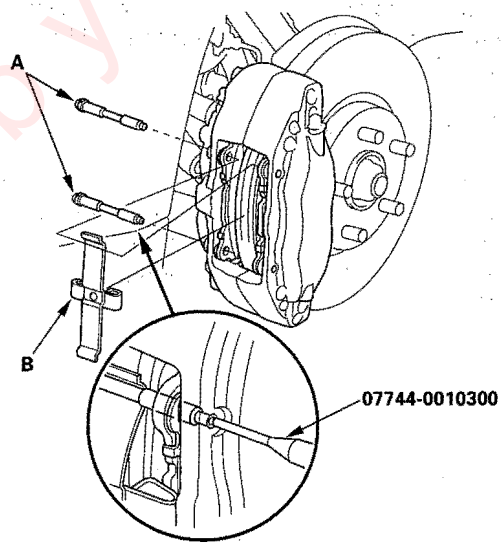

3. Remove the brake pads (A).

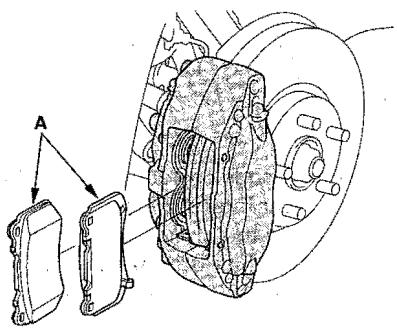

4. Clean the caliper thoroughly; remove any rust, and check for grooves and cracks.

5. Check the brake disc for damage and cracks.

(cont'd)

Protected by AR

Front Brake Pad Inspection and Replacement (cont'd)

6. Mount the special tool (A) on the caliper.

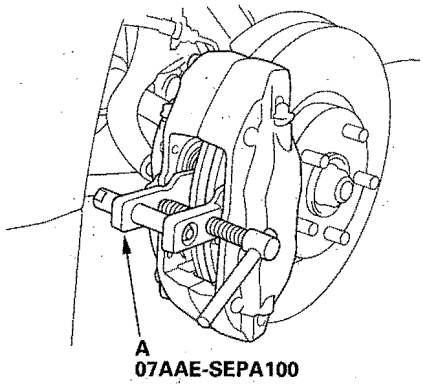

7. Press in the outside and inside pistons with the brake caliper wrench so the caliper will fit over the pads.

8. Remove the special tool.

9. Apply Molykote M77 grease (P/N 08798-9010) to the back of the brake pads (A). Wipe excess grease off the pads. Contaminated brake discs or brake pads reduce stopping ability. Keep grease off the brake disc and pads.

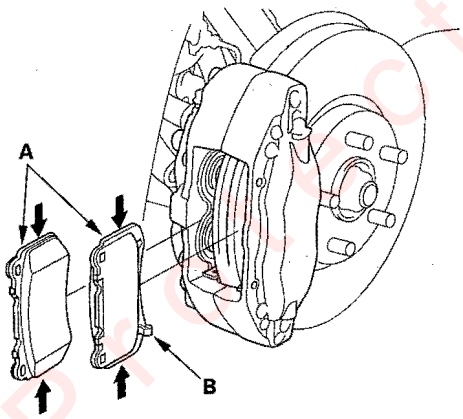

10. Install the brake pads correctly. Install the brake pad with the wear indicator (B) on the outside. If you are reusing the brake pads, always reinstall the brake pads in their original positions to prevent a momentary loss of braking efficiency.

11. Install the pad spring (A).

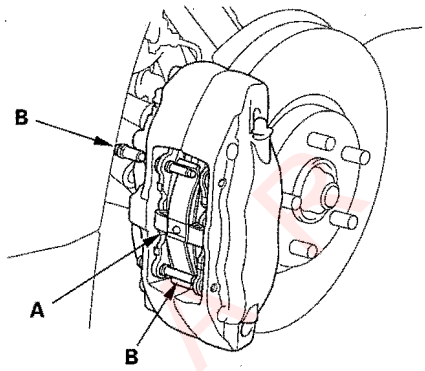

12. Hold the pad spring, and install the pad pins (B) into the caliper from the inside to the outside of vehicle using the special tool.

13. Press the brake pedal several times to make sure the brakes work, then test-drive.

    NOTE: Engagement of the brakes may require a greater pedal stroke immediately after the brake pads have been replaced as a set. Several applications of the brake pedal will restore the normal pedal stroke.

14. After installation, check for leaks at the brake hose and line joints or connections, and retighten if necessary.

15. Reinstall the front wheels. Take care not to scratch the calipers.

Protected by ARP

Front Brake Disc Inspection

Runout

1. Raise the front of the vehicle, and support it with safety stands in the proper locations (see page 1-7). Remove the front wheels. Take care not to scratch the calipers (M/T model).

2. Remove the brake pads (see page 19-13).

3. Inspect the brake disc surface for damage and cracks. Clean the brake disc thoroughly, and remove all rust.

4. Install suitable flat washers (A) and wheel nuts, and tighten the nuts to the specified torque to hold the brake disc securely against the hub.

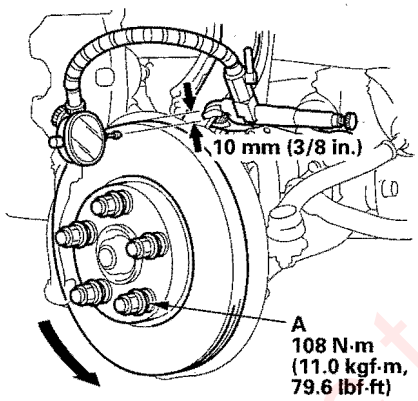

5. Set up the dial gauge against the brake disc as shown, and measure the runout at 10 mm (3/8 in.) from the outer edge of the brake disc.

Brake disc runout:
Service limit: 0.10 mm (0.004 in.)

6. If the brake disc is beyond the service limit, refinish the brake disc with an on-car brake lathe. The Kwik-Lathe produced by Kwik-way Manufacturing Co. and the "Front Brake Disc Lathe" offered by Snap-on Tools Co. are approved for this operation.

Max. refinish limit:
A/T model: 26.0 mm (1.02 in.)
M/T model (4-piston caliper type):
23.0 mm (0.91 in.)

NOTE:
- If the brake disc is beyond the service limit for refinishing, replace it (see step 7 on page 18-13).
- A new brake disc should be refinished if its runout is greater than 0.10 mm (0.004 in.).

Thickness and Parallelism

1. Raise the front of the vehicle, and support it with safety stands in the proper locations (see page 1-7). Remove the front wheels. Take care not to scratch the calipers (M/T model).

2. Remove the brake pads (see page 19-13).

3. Using a micrometer, measure brake disc thickness at eight points, approximately 45° apart and 10 mm (3/8 in.) in from the outer edge of the brake disc. Replace the brake disc if the smallest measurement is less than the max. refinishing limit.

Brake disc thickness:
A/T model:
Standard: 27.9—28.1 mm (1.10—1.11 in.)
Max. refinishing limit: 26.0 mm (1.02 in.)
M/T model (4-piston caliper type):
Standard: 24.9—25.1 mm (0.98—0.99 in.)
Max. refinishing limit: 23.0 mm (0.91 in.)
Brake disc parallelism: 0.015 mm (0.0006 in.) max.

NOTE: This is the maximum allowable difference between the thickness measurements.

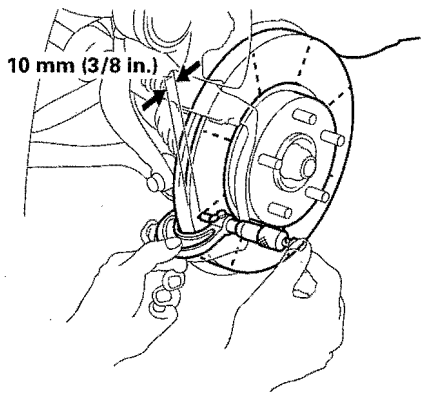

4. If the smallest measurement is less than the max. refinishing limit, replace the brake disc (see step 7 on page 18-13).

5. If the brake disc is beyond the service limit for parallelism, refinish the brake disc with an on-car brake lathe. The Kwik-Lathe produced by Kwik-way Manufacturing Co. and the "Front Brake Disc Lathe" offered by Snap-on Tools Co. are approved for this operation.

Protected by AR

Front Brake Caliper Overhaul

⚠CAUTION

Frequent inhalation of brake pad dust, regardless of material composition, could be hazardous to your health.
- Avoid breathing dust particles.
- Never use an air hose or brush to clean brake assemblies. Use an OSHA-approved vacuum cleaner.

Remove, disassemble, inspect, reassemble, and install the caliper, and note these items:

- Do not spill brake fluid on the vehicle; it may damage the paint; if brake fluid gets on the paint, wash it off immediately with water.
- To prevent dripping brake fluid, cover disconnected hose joints with rags or shop towels.
- Clean all parts in brake fluid and air dry; blow out all passages with compressed air.
- Before reassembling, check that all parts are free of dirt and other foreign particles.
- Replace parts with new ones as specified in the illustration.
- Make sure no dirt or other foreign matter gets in the brake fluid.
- Make sure no grease or oil gets on the brake discs or pads.
- When reusing pads, always reinstall them in their original positions to prevent loss of braking efficiency.
- Do not reuse drained brake fluid. Use only clean Honda DOT 3 brake fluid from an unopened container. Non-Honda brake fluid can cause corrosion and shorten the life of the system.
- Do not mix different brands of brake fluid as they may not be compatible.
- Coat the piston, piston seal groove, and caliper bore with clean brake fluid.
- Replace all rubber parts with new ones whenever disassembled.
- After installing the caliper, check the brake hose and line for leaks, interference, and twisting.

A/T model

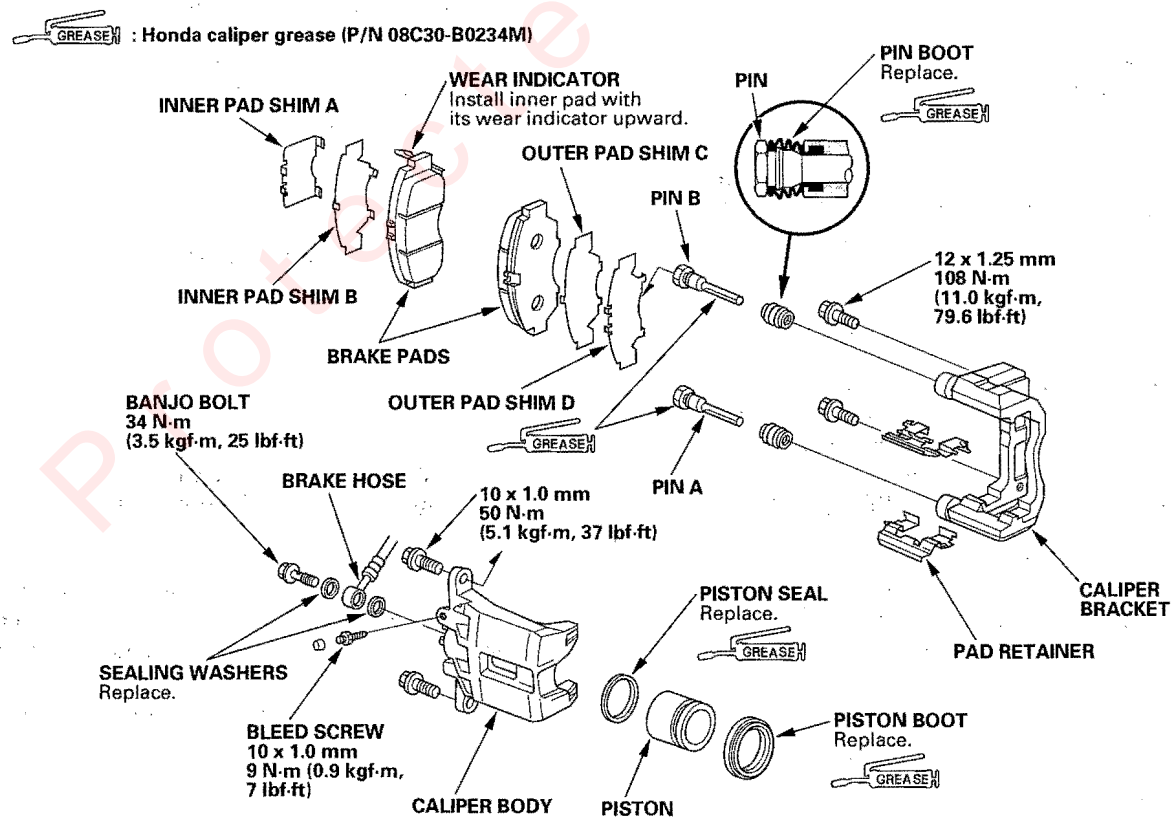

Protected by AR

M/T model (4-piston caliper type)

GREASE : Honda caliper grease (P/N 08C30-B0234M)

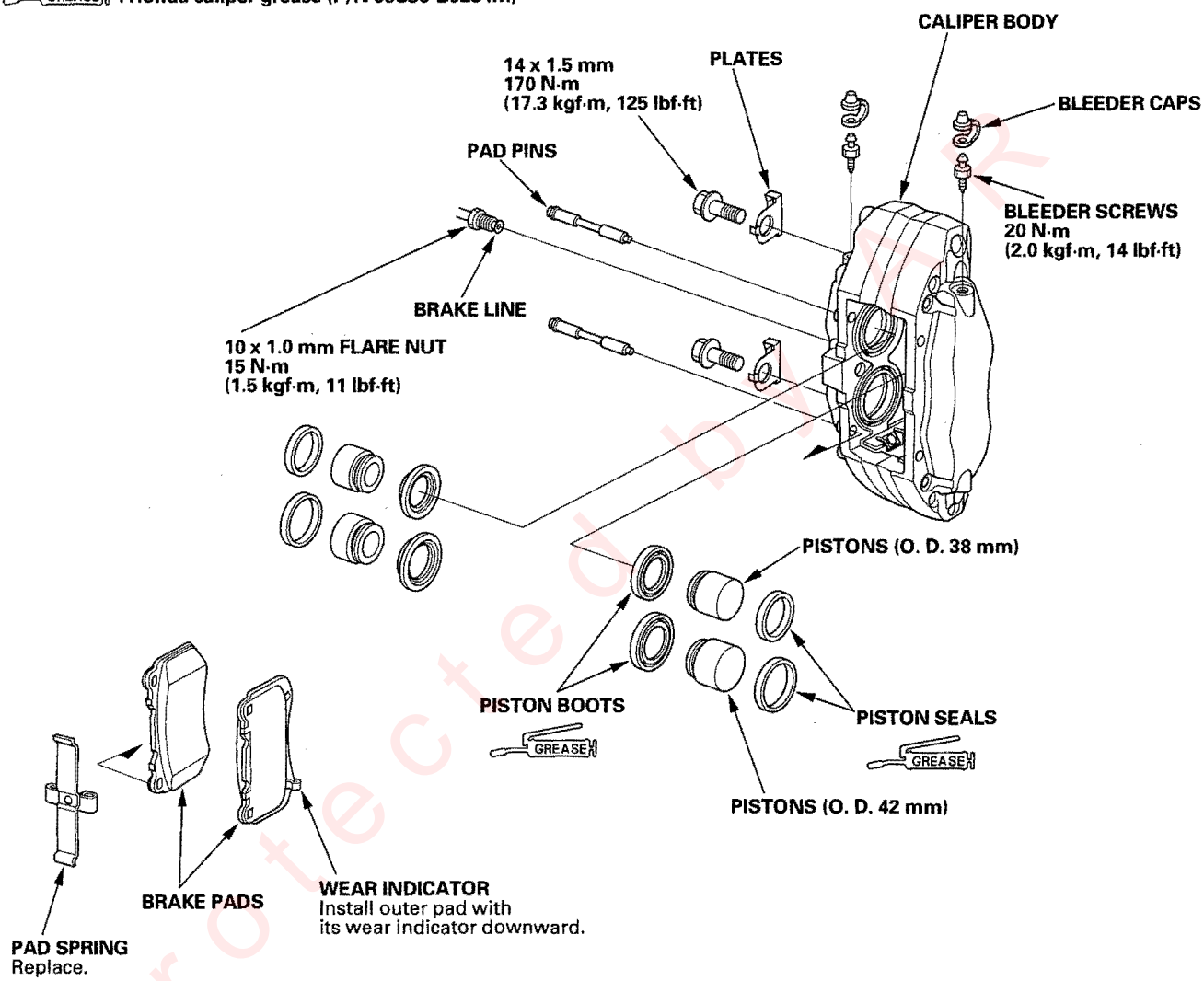

Protected by MAR

Master Cylinder Replacement

1. Lower the vehicle on the ground.
2. Remove the covers (A) in the engine compartment.

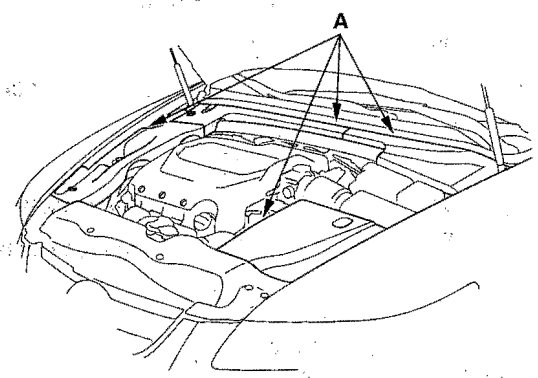

3. Remove the under-hood fuse/relay box (A), and move it aside.

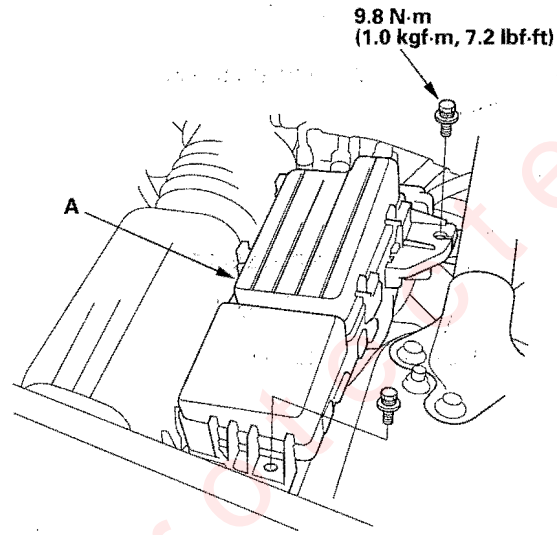

4. Remove the engine wire harness clamp (A) from the strut brace.

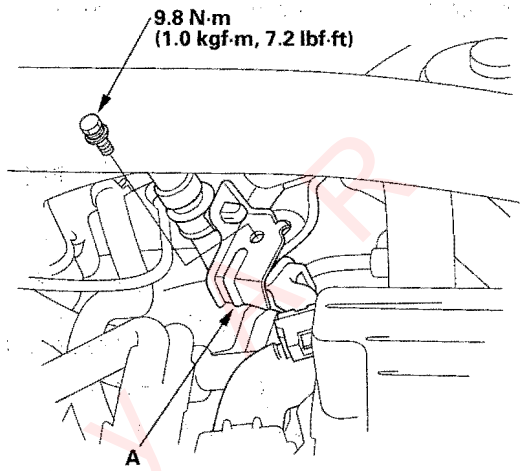

5. Remove the accelerator pedal position (APP) sensor mounting bolt (A) from the strut brace.

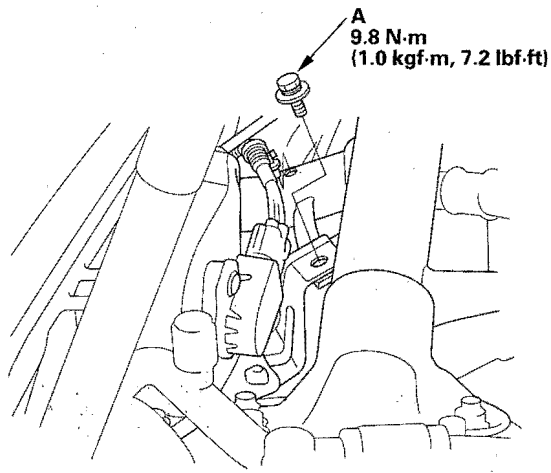

Protected by

6. With the vehicle on the ground, remove the strut brace (A).

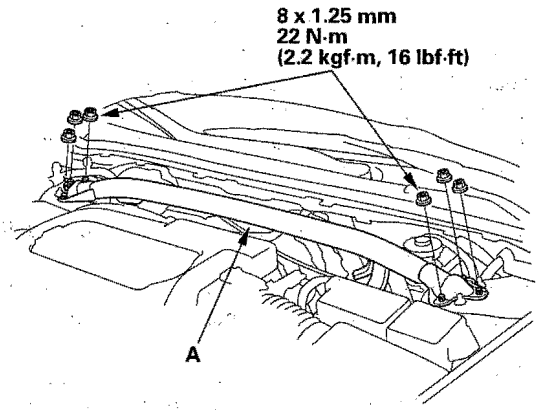

7. Remove the reservoir cap and brake fluid from the master cylinder reservoir.

8. Disconnect the brake fluid level switch connector (A).

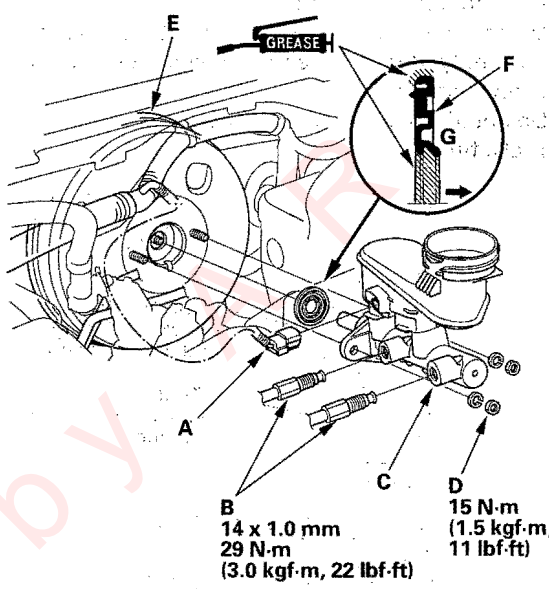

9. Disconnect the brake lines (B) from the master cylinder (C). To prevent spills, cover the hose joints with rags or shop towels.

   NOTE: Do not spill brake fluid on the vehicle; it may damage the paint; if brake fluid does contact the paint, wash it off immediately with water.

10. Remove the master cylinder mounting nuts (D) and washers.

11. Remove the master cylinder from the brake booster (E). Be careful not to bend or damage the brake lines when removing the master cylinder.

12. Remove the rod seal (F) from the master cylinder.

13. Install the master cylinder in the reverse order of removal, and note these items:

    - Replace all the rubber parts with new ones whenever the master cylinder is removed.
    - Use a new rod seal on reassembly.
    - Coat the inner bore lip and outer circumference of the new rod seal with the recommended seal grease in the master cylinder set.
    - Install the rod seal onto the master cylinder with its grooved side (G) toward the master cylinder.
    - Check the brake pedal height and free play after installing the master cylinder, and adjust it if necessary.

Protected by

Master Cylinder Inspection

NOTE:
- Before reassembling, check that all parts are free of dirt and other foreign particles.
- Do not try to disassemble the master cylinder assembly. Replace the master cylinder assembly with a new part if necessary.
- Do not allow dirt or foreign matter to contaminate the brake fluid.

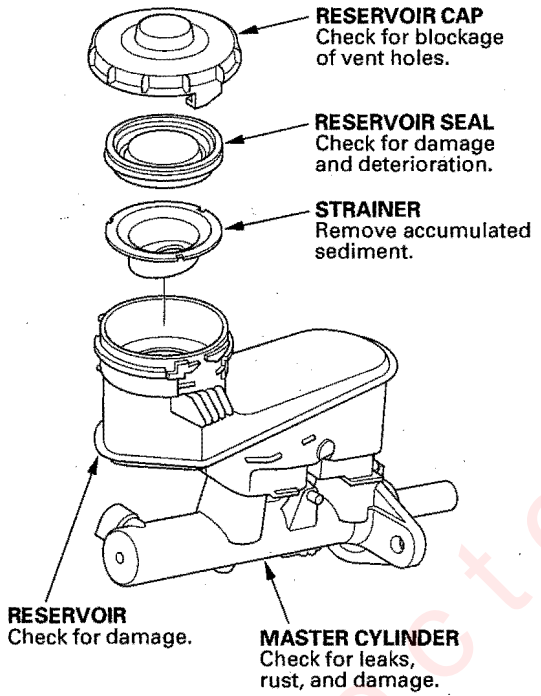

Brake Booster Test

Functional Test

1. With the engine stopped, press the brake pedal several times to deplete the vacuum reservoir, then press the brake pedal hard, and hold it for 15 seconds. If the brake pedal sinks, either the master cylinder is bypassing internally, or the brake system (master cylinder, lines, modulator, or caliper) is leaking.

2. Start the engine with the brake pedal pressed. If the pedal sinks slightly, the vacuum booster is operating normally. If the brake pedal height does not vary, the booster or check valve is faulty.

3. With the engine running, press the brake pedal lightly and shift the transmission to the D position. Apply just enough pressure to hold back automatic transmission creep. If the brake pedal sinks more than 10 mm (3/8 in.) in 3 minutes, the master cylinder is faulty. A slight change in brake pedal height when the A/C compressor cycles on and off is normal. (The A/C compressor load changes the vacuum available to the booster.)

Protected by FAR

Leak Test

1. Press the brake pedal with the engine running, then stop the engine. If the brake pedal height does not vary while pressed for 30 seconds, the vacuum booster is OK. If the brake pedal rises, the booster is faulty.

2. Turn the engine off and wait 30 seconds. Press the brake pedal several times using normal pressure. When the brake pedal is first pressed, it should be low. On consecutive applications, the brake pedal height should gradually rise. If the brake pedal position does not vary, check the booster check valve.

3. Disconnect the brake booster vacuum hose (check valve built-in) (A) at the booster side.

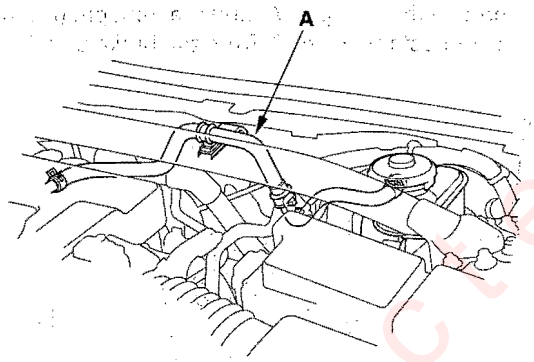

4. Start the engine, and let it idle. There should be vacuum available. If no vacuum is available, the check valve is not working properly. Replace the brake booster vacuum hose and check valve, and retest.

5. Start the engine, and then pinch the brake booster vacuum hose between the check valve and the booster.

6. Turn the engine off and wait 30 seconds. Press the brake pedal several times using normal pressure. When the brake pedal is first pressed, it should be low. On consecutive applications, the brake pedal height should gradually rise.

   - If the brake pedal position does not vary, replace the brake booster.
   - If the brake pedal position varies, replace the brake booster vacuum hose/check valve assembly.

Protected by A P

Brake Booster Replacement

1. Remove the master cylinder (see page 19-20).
2. Disconnect the vacuum hose (A) from the brake booster (B).

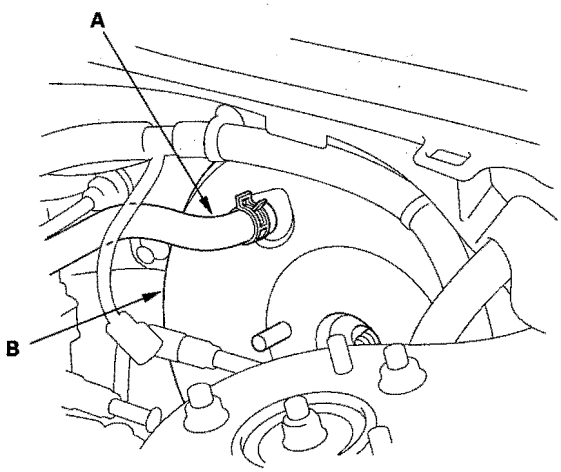

3. Remove the air cleaner assembly (A).

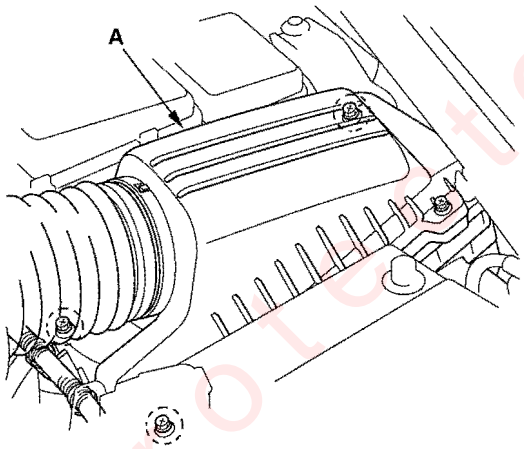

4. Remove the primary and secondary brake lines (A) from the hose clamp (B).

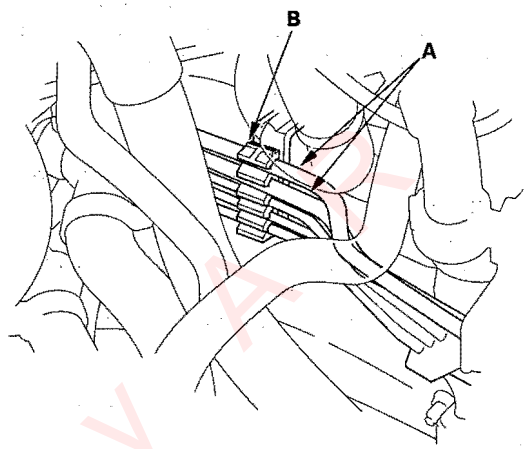

5. Remove the lock pin (A) and the joint pin (B), then disconnect the yoke (C) from the brake pedal.

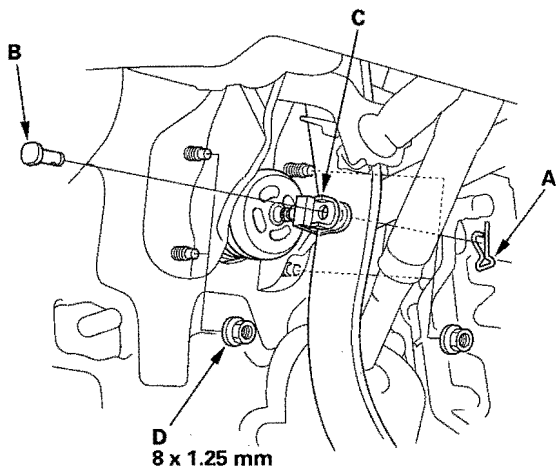

6. Remove the brake booster mounting nuts (D).

Protected by ACR

7. Remove the brake booster (A) from the engine compartment.

NOTICE

- Be careful not to damage the booster surfaces and threads of the booster stud bolts.
- Be careful not to bend or damage the brake lines.

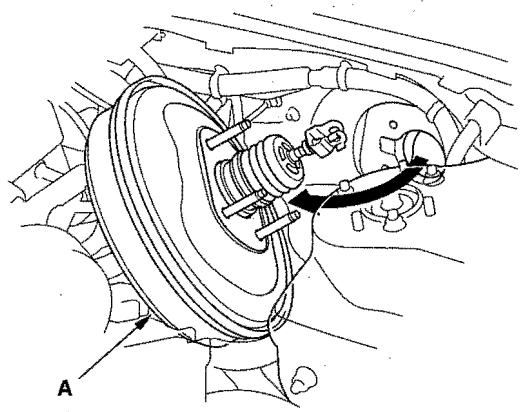

8. Install the brake booster in the reverse order of removal, and note these items:

- Adjust the pushrod length before installing the brake booster.
- Use a new lock pin whenever installing.
- After installing the brake booster and master cylinder, fill the reservoir with new brake fluid from an unopened container bleed the brake system (see page 19-9), and adjust the brake pedal height and free play (see page 19-6).

Protected by AR

Rear Brake Pad Inspection and Replacement

⚠CAUTION

Frequent inhalation of brake pad dust, regardless of material composition, could be hazardous to your health.
- Avoid breathing dust particles.
- Never use an air hose or brush to clean brake assemblies. Use an OSHA-approved vacuum cleaner.

Inspection

1. Raise the rear of the vehicle, and support it with safety stands in the proper locations (see page 1-7). Remove the rear wheels.

2. Check the thickness of the inner brake pad (A) and outer pad (B). Do not include the thickness of the backing plate.

Brake pad thickness:
Standard: 8.5—9.5 mm (0.33—0.37 in.)
Service limit: 1.6 mm (0.06 in.)

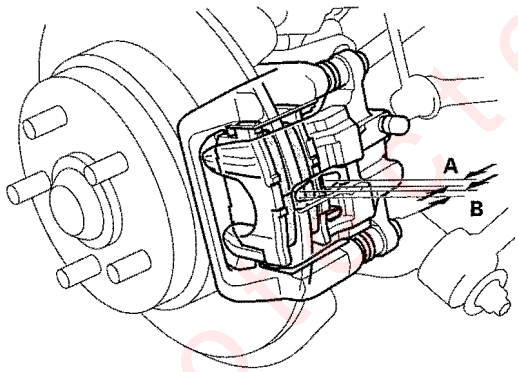

3. If the brake pad thickness is less than the service limit, replace all the rear brake pads as a set.

Replacement

1. Raise the rear of the vehicle, and support it with safety stands in the proper locations (see page 1-7). Remove the rear wheels.

2. Release the parking brake.

3. Remove the brake hose (A) from the suspension arm by removing the mounting bolt.

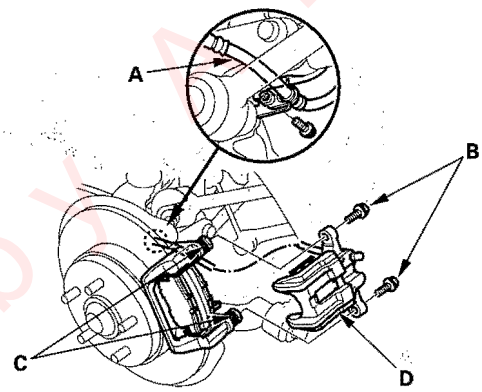

4. Remove the caliper bolts (B) while holding the caliper pins (C) with a wrench being careful not to damage the pin boot, and remove the caliper (D). Check the hose and pin boots for damage and deterioration. Thoroughly clean the outside of the caliper to prevent dust and dirt from entering inside. Support the caliper with a piece of wire so it does not hang from the brake hose.

5. Remove the pad shims (A) and brake pads (B).

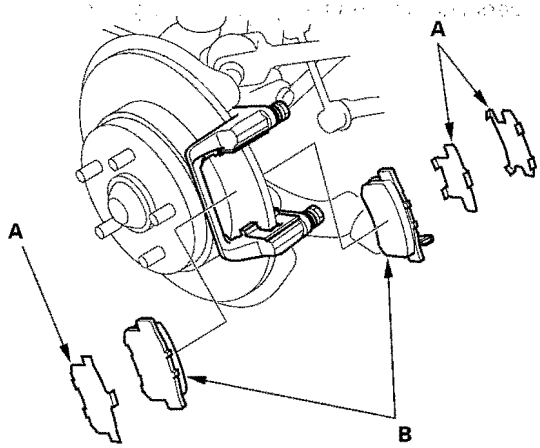

Processed by

6. Remove the pad retainers (A).

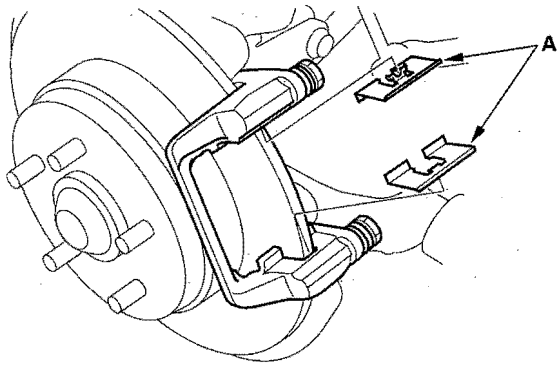

7. Clean the caliper thoroughly; remove any rust and check for grooves and cracks.

8. Check the brake disc/drum for damage and cracks.

9. Install the pad retainers.

10. Apply Molykote M77 grease (P/N 08798-9010) to the pad side of the shims (A), and back of the brake pads (B) and the other areas indicated by the arrows. Wipe excess grease off the pad shims and brake pads. Contaminated brake discs or pads reduce stopping ability. Keep grease off the discs and pads.

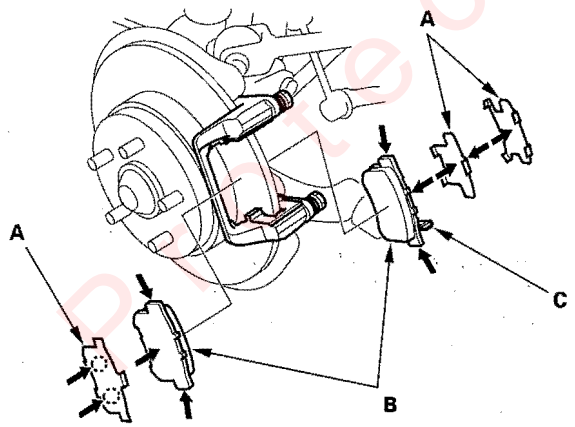

11. Install the brake pads (B) and pad shims on the caliper bracket. Install the inner brake pad with its wear indicator (C) facing downward.
If you are reusing the brake pads, always reinstall the brake pads in their original positions to prevent a momentary loss of braking efficiency.

12. Push in the piston so the caliper will fit over the brake pads. Make sure the piston boot is in position to prevent damaging it when installing the caliper.

13. Install the brake caliper (A).

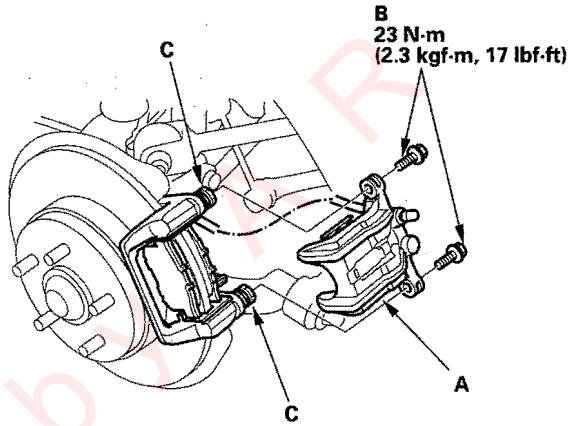

14. Install the caliper bolts (B), and torque it to the specified torque while holding the caliper pins (C) with a wrench being careful not to damage the pin boot.

15. Install the brake hose onto the suspension arm with the mounting bolt.

16. Press the brake pedal several times to make sure the brakes work, then road-test the vehicle.

    NOTE: Engagement of the brake may require a greater pedal stroke immediately after the brake pads have been replaced as a set. Several applications of the brake pedal will restore the normal pedal stroke.

17. After installation, check for leaks at the hose and line joints and connections, and retighten if necessary.

Protected by MARS

Rear Brake Disc Inspection

Runout

1. Raise the rear of the vehicle, and support it with safety stands in the proper locations (see page 1-7). Remove the rear wheels.
2. Remove the brake pads (see page 19-26).
3. Inspect the brake disc/drum surface for damage and cracks. Clean the brake disc/drum thoroughly, and remove all rust.
4. Install suitable flat washers (A) and wheel nuts, and tighten the wheel nuts to the specified torque to hold the brake disc/drum securely against the hub.

   Brake disc/drum runout:
   Service limit: 0.10 mm (0.004 in.)

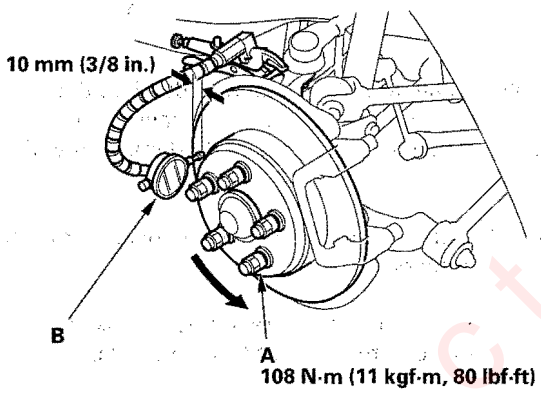

5. Set up the dial gauge against the brake disc/drum as shown, and measure the runout at 10 mm (3/8 in.) from the outer edge of the brake disc.
6. If the disc is beyond the service limit, refinish the brake disc/drum with an on-car brake lathe. The Kwik-Lathe produced by Kwik-way Manufacturing Co. and the "Front Brake Disc Lathe" offered by Snap-on Tools Co. are approved for this operation.

   Max. refinishing limit: 7.5 mm (0.30 in.)

   NOTE:
   - If the brake disc/drum is beyond the service limit for refinishing, replace it (see step 5 on page 18-30).
   - A new disc should be refinished if its runout is greater than 0.10 mm (0.004 in.).

Thickness and parallelism

1. Raise the rear of the vehicle, and support it with safety stands in the proper locations (see page 1-7). Remove the rear wheels.
2. Remove the brake pads (see page 19-26).
3. Using a micrometer (A), measure disc thickness at eight points, about 45° apart and 10 mm (3/8 in.) in from the outer edge of the brake disc/drum. Replace the brake disc if the smallest measurement is less than the max. refinishing limit.

   Brake disc/drum thickness:
   Standard: 8.9—9.1 mm (0.350—0.358 in.)
   Max. refinishing limit: 7.5 mm (0.30 in.)
   Brake disc/drum parallelism:
   0.015 mm (0.0006 in.) max.

   NOTE: This is the maximum allowable difference between the thickness measurements.

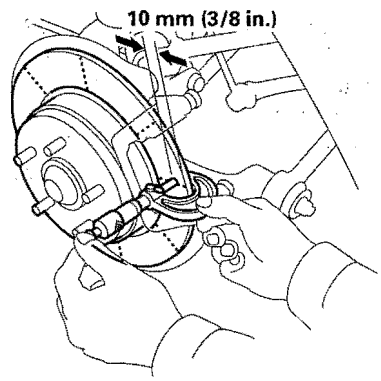

4. If the disc is beyond the service limit for parallelism, refinish the brake disc/drum with an on-car brake lathe. The Kwik-Lathe produced by Kwik-way Manufacturing Co. and the "Front Brake Disc Lathe" offered by Snap-on Tools Co. are approved for this operation.

   NOTE: If the brake disc/drum is beyond the service limit for refinishing, replace it (see step 5 on page 18-30).

Protected by AP

Rear Brake Caliper Overhaul

⚠CAUTION

Frequent inhalation of brake pad dust, regardless of material composition, could be hazardous to your health.
- Avoid breathing dust particles.
- Never use an air hose or brush to clean brake assemblies. Use an OSHA-approved vacuum cleaner.

Remove, disassemble, inspect, reassemble, and install the caliper, and note these items:

- Do not spill brake fluid on the vehicle; it may damage the paint; if brake fluid gets on the paint, wash it off immediately with water.
- To prevent dripping brake fluid, cover disconnected hose joints with rags or shop towels.
- Clean all parts in brake fluid and air dry; blow out all passages with compressed air.
- Before reassembling, check that all parts are free of dirt and other foreign particles.
- Replace parts with new ones as specified in the illustration.
- Make sure no dirt or other foreign matter gets in the brake fluid.
- Make sure no grease or oil gets on the brake discs or pads.
- When reusing brake pads, always reinstall them in their original positions to prevent loss of braking efficiency.
- Do not reuse drained brake fluid. Use only clean Honda DOT 3 Brake Fluid from an unopened container. Non-Honda brake fluid can cause corrosion and shorten the life of the system.
- Do not mix different brands of brake fluid as they may not be compatible.
- Coat the piston, piston seal groove, and caliper bore with clean brake fluid.
- Replace all rubber parts with new ones whenever disassembled.
- After installing the caliper, check the brake hose and line for leaks, interference, and twisting.

GREASE : Honda caliper grease (P/N 08C30-B0234M)

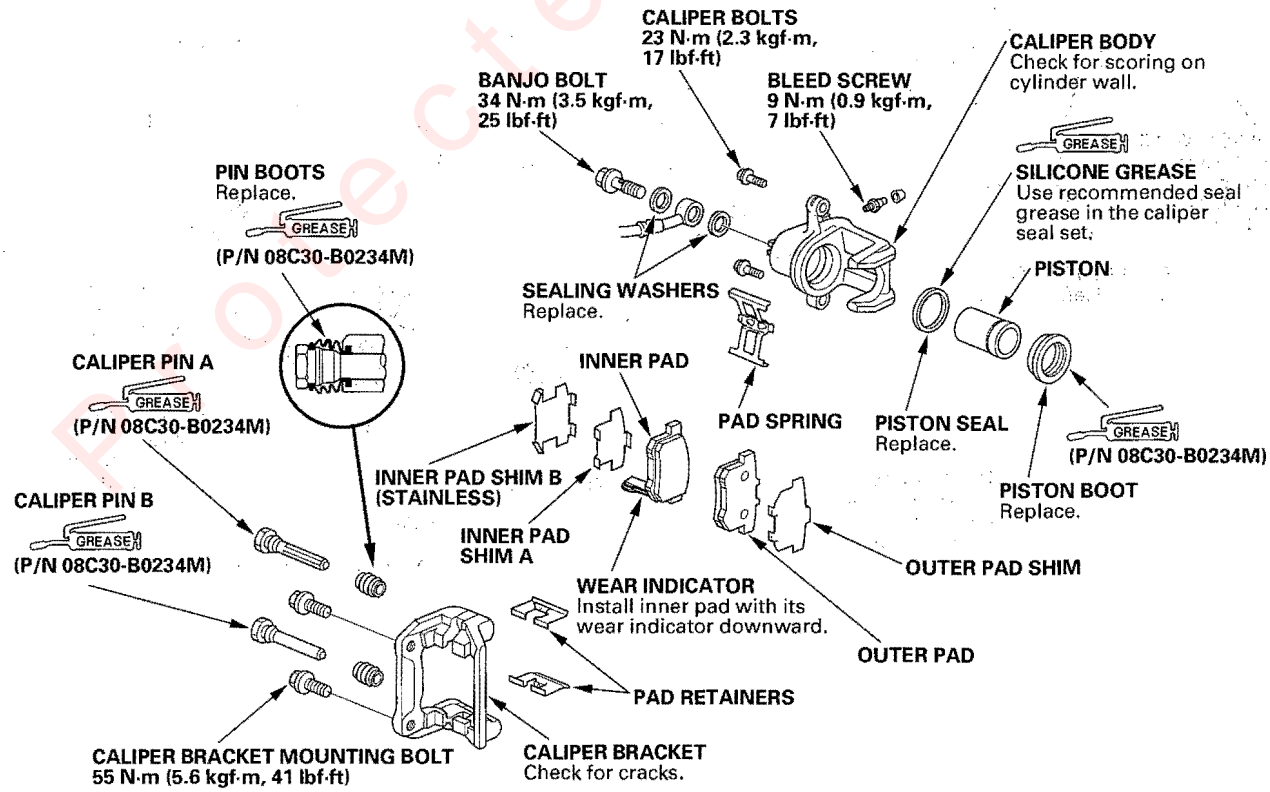

Protected by AR

Parking Brake Inspection

⚠CAUTION

Frequent inhalation of brake pad dust, regardless of material composition, could be hazardous to your health.
- Avoid breathing dust particles.
- Never use an air hose or brush to clean brake assemblies. Use an OSHA-approved vacuum cleaner.

1. Raise the rear of the vehicle, and support it with safety stands in the proper locations (see page 1-7). Remove the rear wheels.

2. Release the parking brake, and remove the rear brake caliper and brake disc/drum (see step 5 on page 18-30).

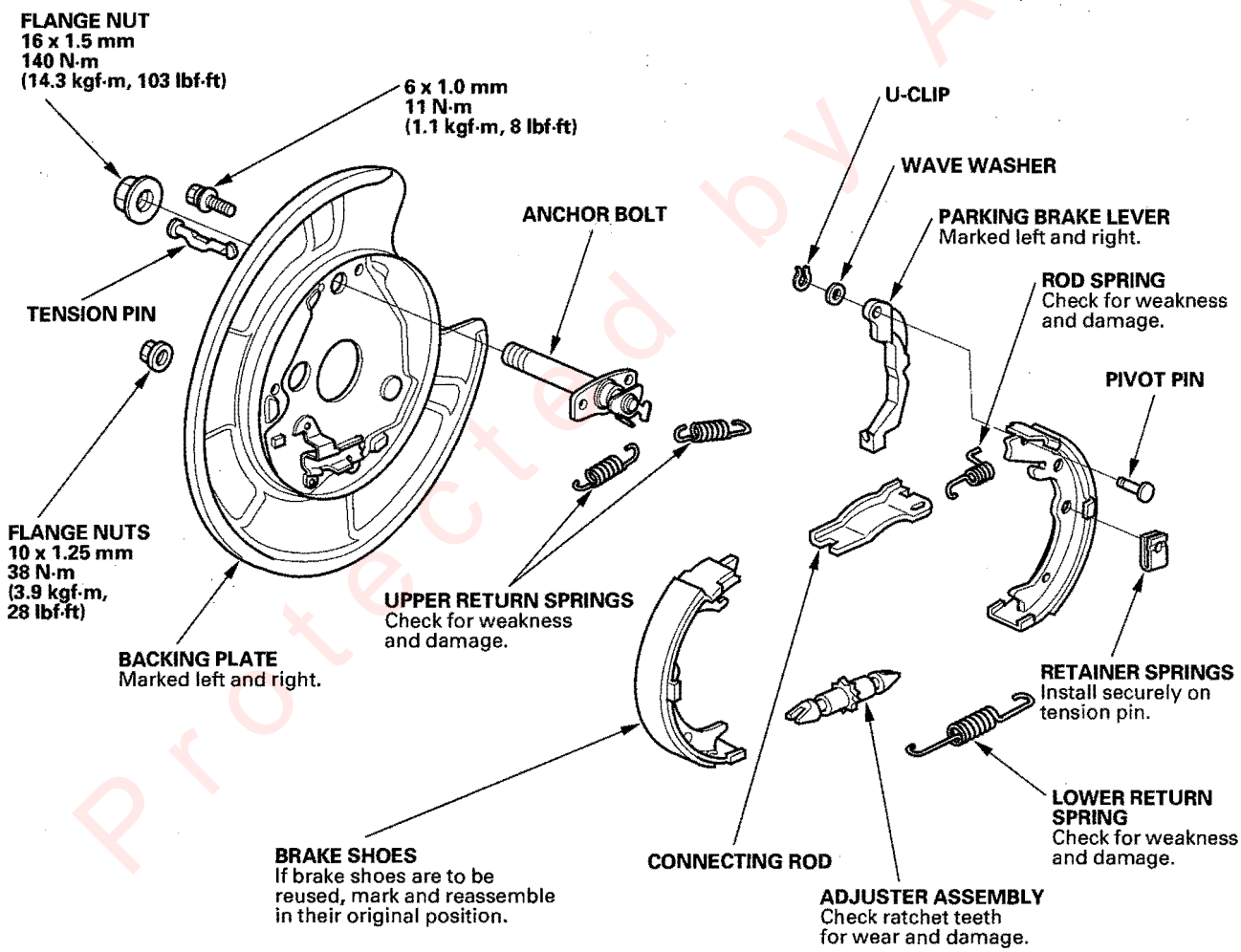

Protected by AR

3. Check the parking brake linings (A) for cracking, glazing, wear, and contamination.

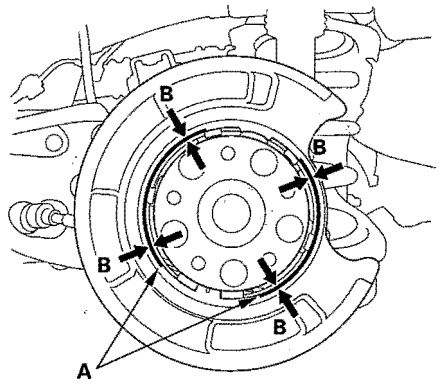

4. Measure the parking brake lining thickness (B). Measurement does not include brake shoe thickness.

Parking brake lining thickness:
Standard: 3.2 mm (0.126 in.)
Service limit: 1.0 mm (0.04 in.)

5. If the parking brake lining thickness is less than the service limit, replace all the parking brake shoes as a set.

6. Check the bearings in the hub unit for smooth operation.

7. Measure the inside diameter of the parking brake drum with inside vernier calipers.

Parking brake drum inside diameter:
Standard: 169.9—170.0 mm (6.689—6.693 in.)
Service limit: 171.0 mm (6.732 in.)

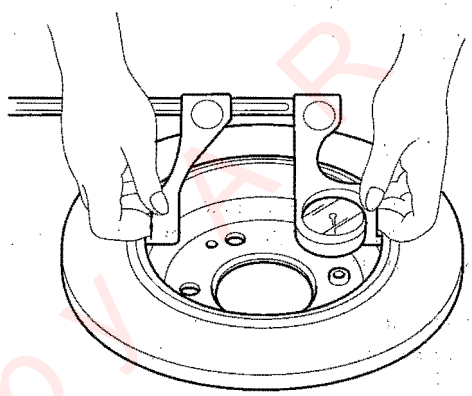

8. If the inside diameter of the parking brake drum is more than service limit, replace the brake disc/drum.

9. Check the parking brake drum for scoring, grooves, and cracks.

Protected by

Parking Brake Shoe Replacement

⚠CAUTION

Frequent inhalation of brake pad dust, regardless of material composition, could be hazardous to your health.
- Avoid breathing dust particles.
- Never use an air hose or brush to clean brake assemblies. Use an OSHA-approved vacuum cleaner.

Disassembly

1. Raise the rear of the vehicle, and support it with safety stands in the proper locations (see page 1-7). Remove the rear wheels.

2. Release the parking brake and remove the rear brake caliper and brake disc/drum (see step 5 on page 18-30).

3. Disconnect and remove the upper return springs (A).

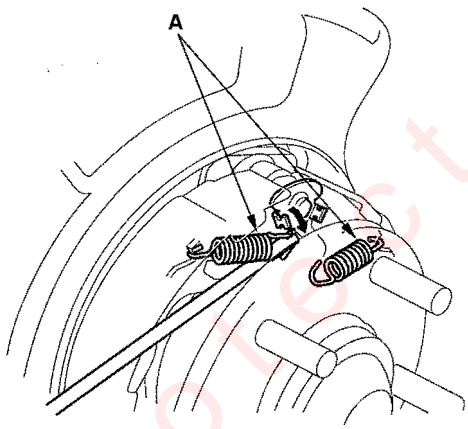

4. Remove the tension pins (A) by pushing the retainer springs (B) and turning the pins.

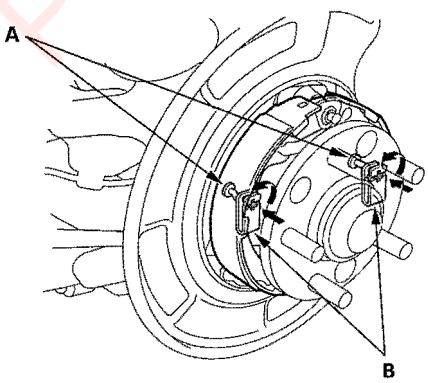

5. Disconnect the rod spring (A), and remove the connecting rod (B).

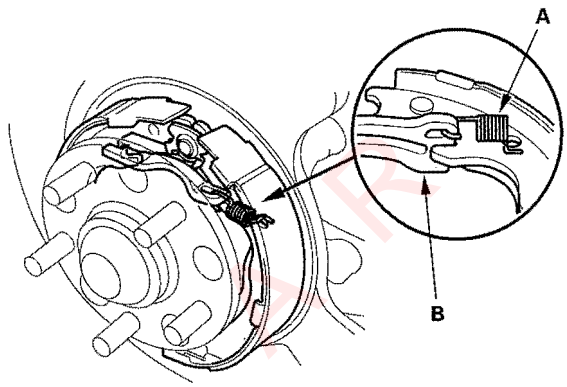

6. Lower the parking brake shoe assembly.

7. Remove the forward brake shoe by removing the lower return spring (A) and adjuster assembly (B).

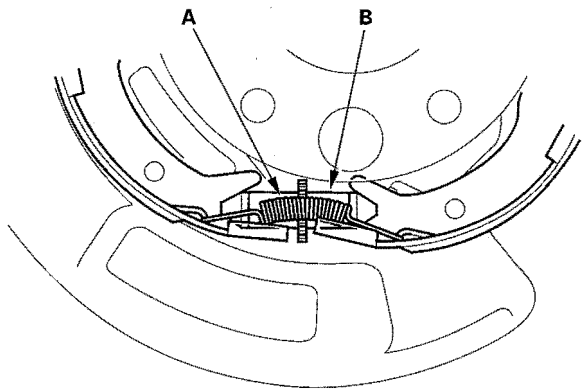

Protected by

8. Remove the rearward brake shoe by disconnecting the parking brake cable (A) from the parking brake lever (B).

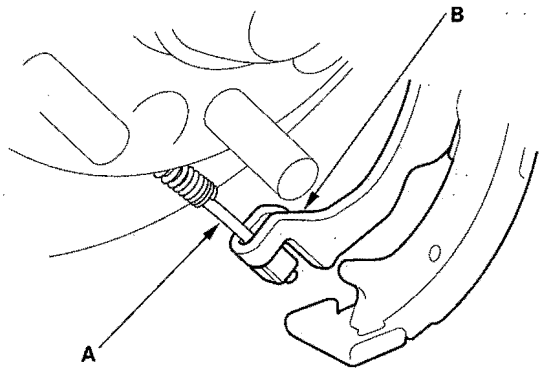

9. Remove the U-clip (A), wave washer (B), parking brake lever (C), and pivot pin (D) from the brake shoe.

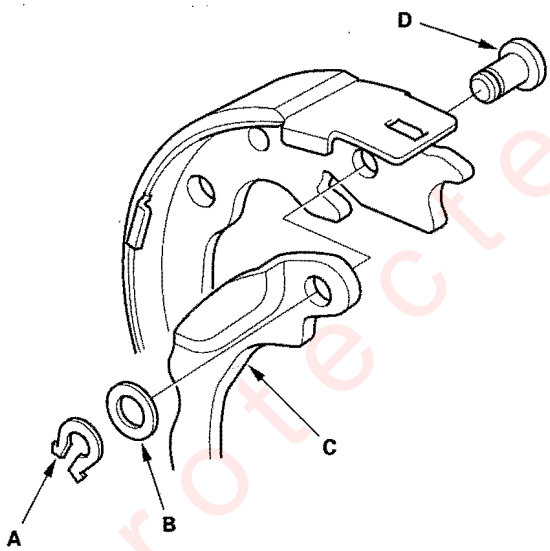

Reassembly

1. Apply Molykote 44 MA grease to the sliding surface of the pivot pin (A), and insert the pin into the brake shoe (B) from the rear side.

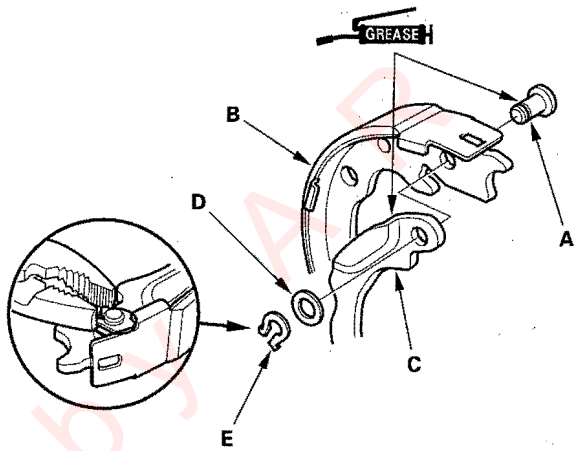

2. Install the parking brake lever (C) and wave washer (D) on the pivot pin, and secure with a new U-clip (E).

   - Install the wave washer with its convex side facing out.
   - Pinch the U-clip securely to prevent the pivot pin from coming out from the brake shoe.

3. Connect the parking brake cable (A) to the parking brake lever (B). Apply silicone grease to the cable contact surface (C) on the backing plate.

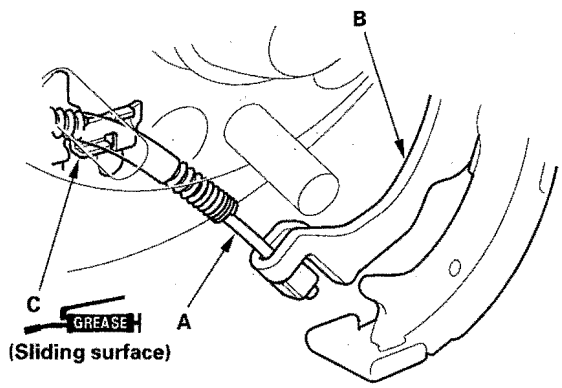

(cont'd)

Protected by AP

Parking Brake Shoe Replacement (cont'd)

4. Apply Molykote 44 MA grease to the shoe ends and connecting rod ends (A), sliding surfaces (B), and opposite edges of the parking brake shoe (C) as shown. Wipe off any excess. Keep grease off the brake linings.

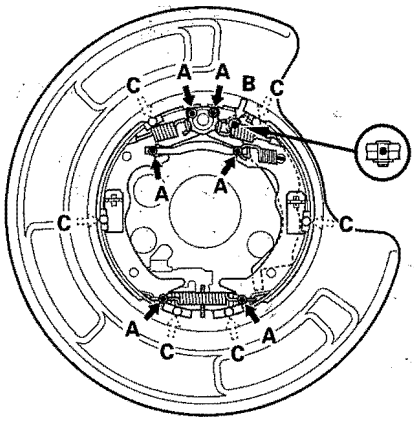

Greasing symbols:

→● Brake shoe ends and connecting rod ends
⇨○ Opposite edge of the shoe
⇨● Sliding surface

5. Clean the threaded portions of the clevis A, and coat the threads of the clevis with grease. Clean the sliding surface of the clevis B, and coat the sliding surface of the clevis B with grease. Install the clevis A and B on the adjuster (C) and shorten the clevis A by turning the adjuster.

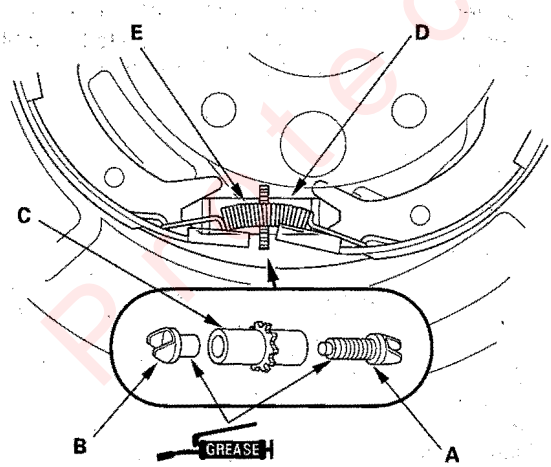

6. Reinstall the brake shoe adjuster assembly (D), and hook the lower return spring (E) on the parking brake shoes.

7. Hook the rod spring (A) or the connecting rod (B) first with the spring end (C) pointing downward. Then hook the rod spring to the parking brake shoe, and install the connecting rod on the parking brake shoes.

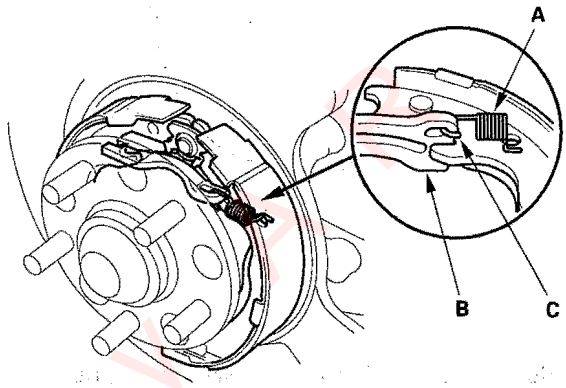

8. Reinstall the tension pins (A) and retainer springs (B). Make sure the tension pin does not contact to the parking brake lever.

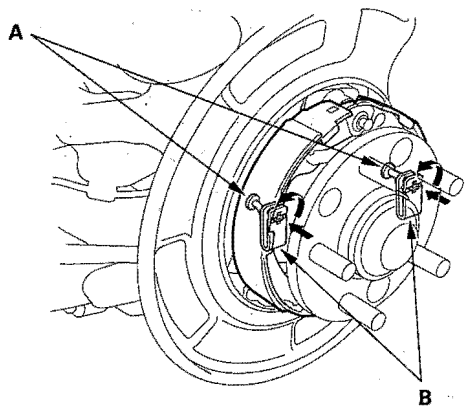

9. Reinstall the upper return springs (A).

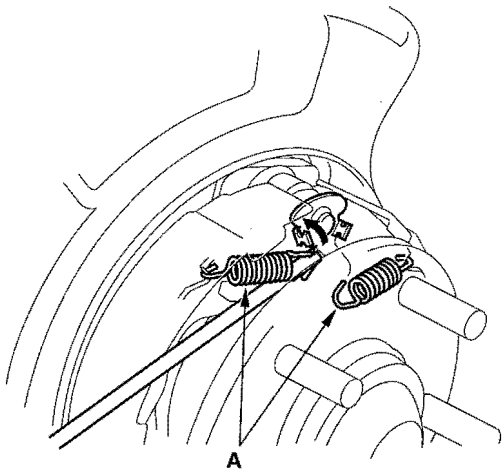

10. Install the rear brake disc/drum and rear brake caliper (see step 5 on page 18-30).

11. Do the major parking brake adjustment (see page 19-8).

Parking Brake Shoe Lining Break-in

NOTE: Perform brake lining surface break-in when replacing shoes with new brake linings and/or new rear brake disc/drum.

⚠ WARNING

Perform this operation in a safe area.

1. Park the vehicle on a firm, level surface.
2. Do the major parking brake adjustment (see page 19-8).
3. Do the minor parking brake adjustment (see page 19-8).
4. Keep the parking brake lever release button pushed with a piece of tape (A).

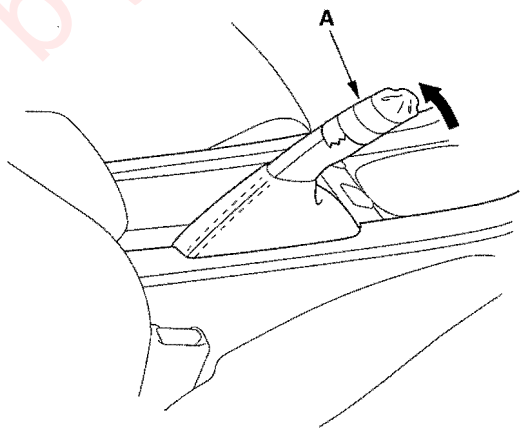

5. Drive the vehicle at 25 mph (40 km/h).
6. Pull the parking brake lever up with 98 N·m (10 kgf, 22 lbf) of force while you are driving the vehicle for 400 m (1/4 mile).
7. Pull the parking brake lever up with 147 N·m (15 kgf, 33 lbf) of force while you are driving the vehicle for 10 seconds.
8. Stop the vehicle and release the parking brake lever for 5—10 minutes to allow the rear brake disc/drum to cool.
9. Check the parking brake lever adjustment (see page 19-7).

Protected by AR

Brake Pedal Replacement

1. Remove the lock pin (A) and pin (B).

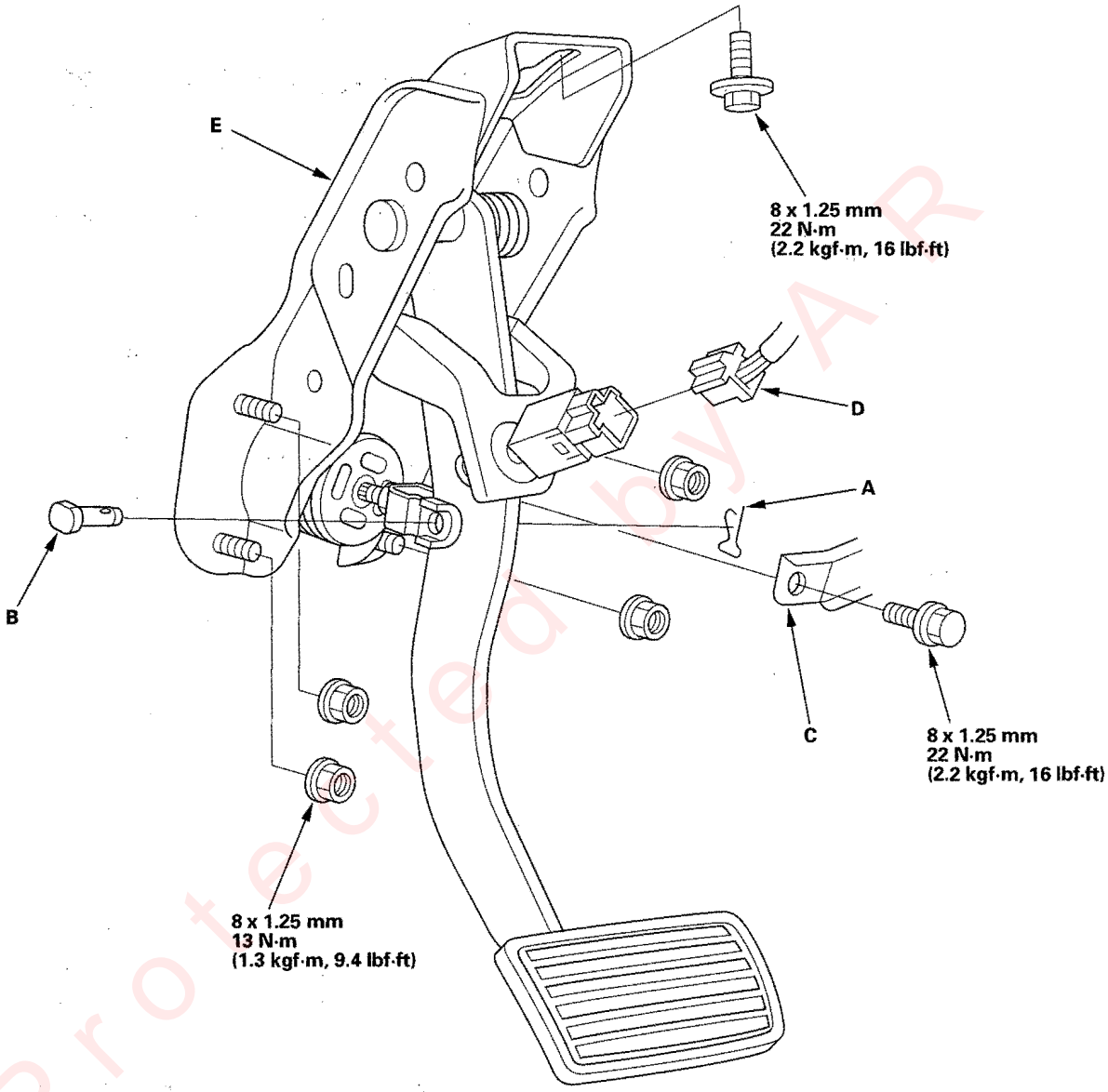

2. Remove the brake pedal bracket support member (C).
3. Disconnect brake pedal position switch connector (D).
4. Remove the break pedal with bracket (E).
5. Install the brake pedal bracket in the reverse order of removal.
6. Do the brake pedal and brake pedal position switch adjustment (see page 19-6).

Protected by A R

Brake Hose and Line Inspection

1. Inspect the brake hoses for damage, deterioration, leaks, interference, and twisting.
2. Check the brake lines for damage, rusting, and leaks. Also check for bent brake lines.
3. Check for leaks at hose and line joints and connections, and retighten if necessary.
4. Check the master cylinder and VSA modulator-control unit for damage and leakage.

   NOTE: Replace the brake hose clip whenever the brake hose is serviced.

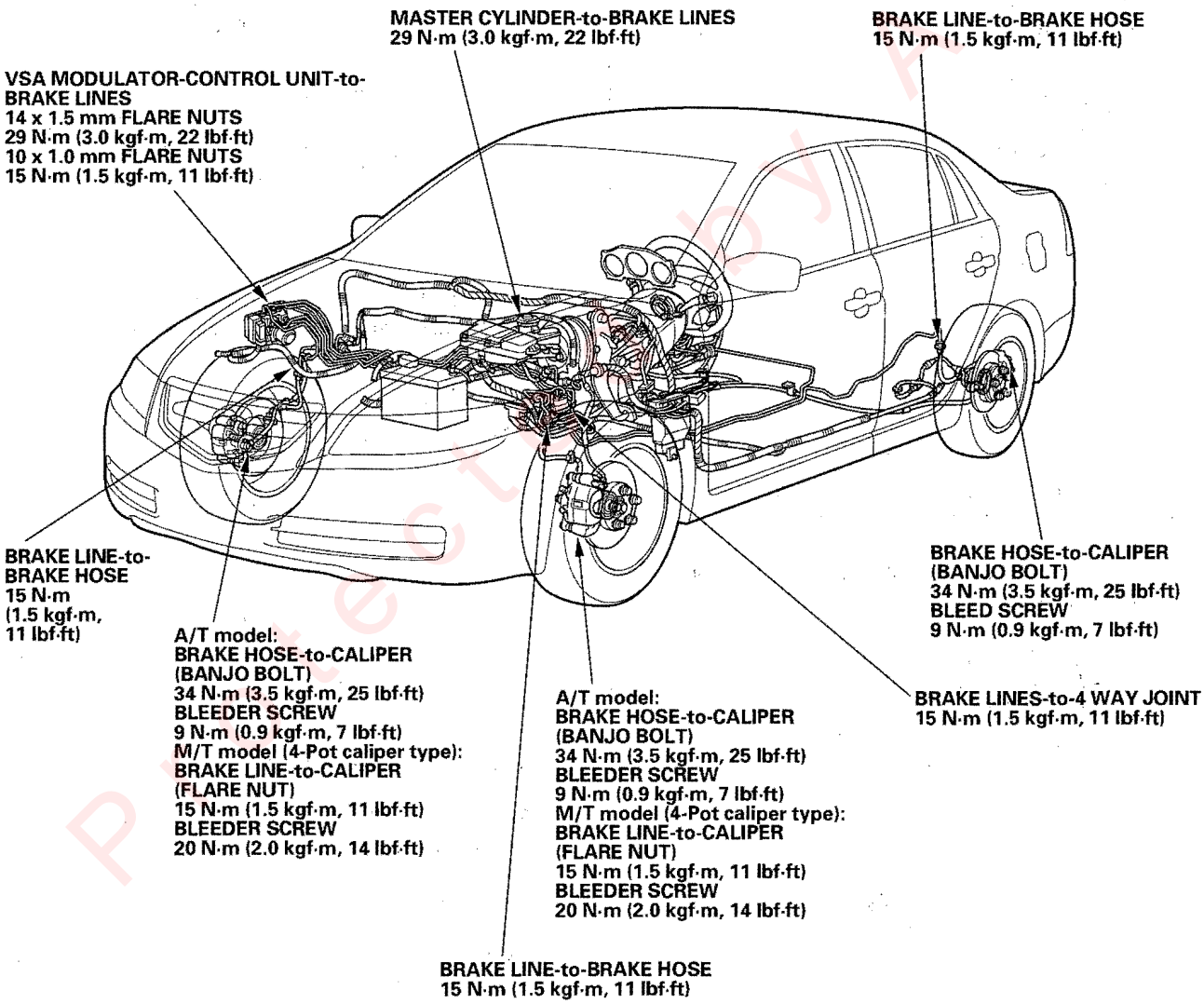

Protected by A.R.

Brake Hose Replacement

NOTE:
- Before reassembling, check that all parts are free of dirt and other foreign particles.
- Replace parts with new ones whenever specified to do so.
- Do not spill brake fluid on the vehicle; it may damage the paint; if brake fluid gets on the paint, wash it off immediately with water.
- To prevent dripping, cover disconnected line joints with rags or shop towels.

1. Replace the brake hose (A) if the hose is twisted, cracked, or leaking.

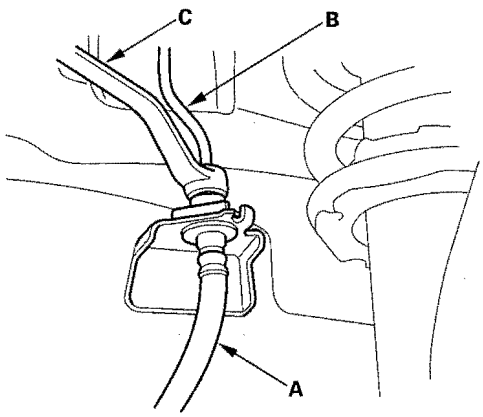

2. Disconnect the brake hose from the brake line (B) using a 10 mm flare-nut wrench (C).

3. Remove and discard the brake hose clip (A) from the brake hose (B).

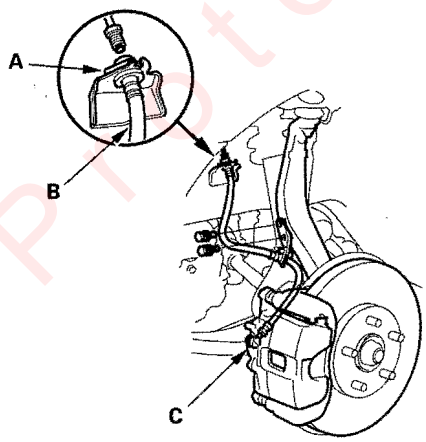

4. Remove the banjo bolt (C), and disconnect the brake hose from the caliper.

5. Remove the brake hose from the knuckle.

6. Install the brake hose (A) on the damper with flange bolts (B) first, then connect the brake hose to the caliper with the banjo bolt (C) and new sealing washers (D).

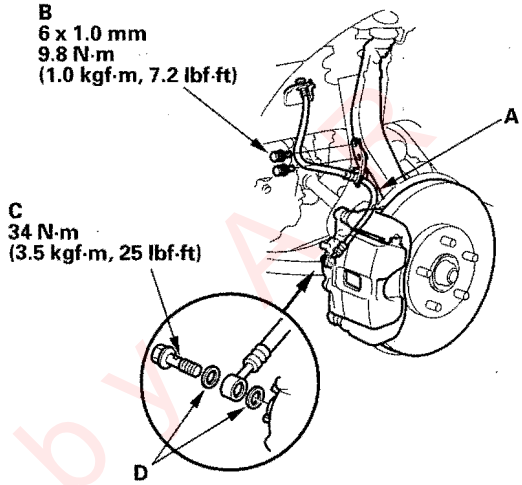

7. Install the brake hose (A) on the upper brake hose bracket (B) with a new brake hose clip (C).

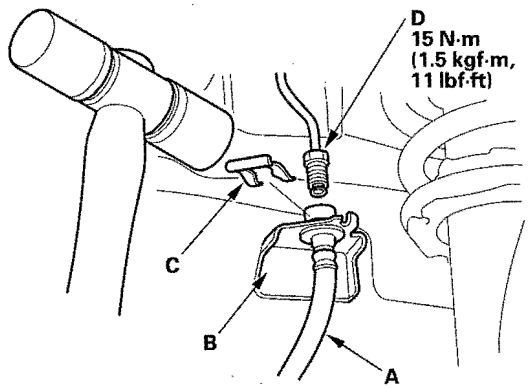

8. Connect the brake line (D) to the brake hose.

9. After installing the brake hose, bleed the brake system (see page 19-9).

10. Do the following checks:
    - Check the brake hose and line joint for leaks, and tighten if necessary.
    - Check the brake hoses for interference and twisting.

Protected by M

Parking Brake Cable Replacement

Exploded View

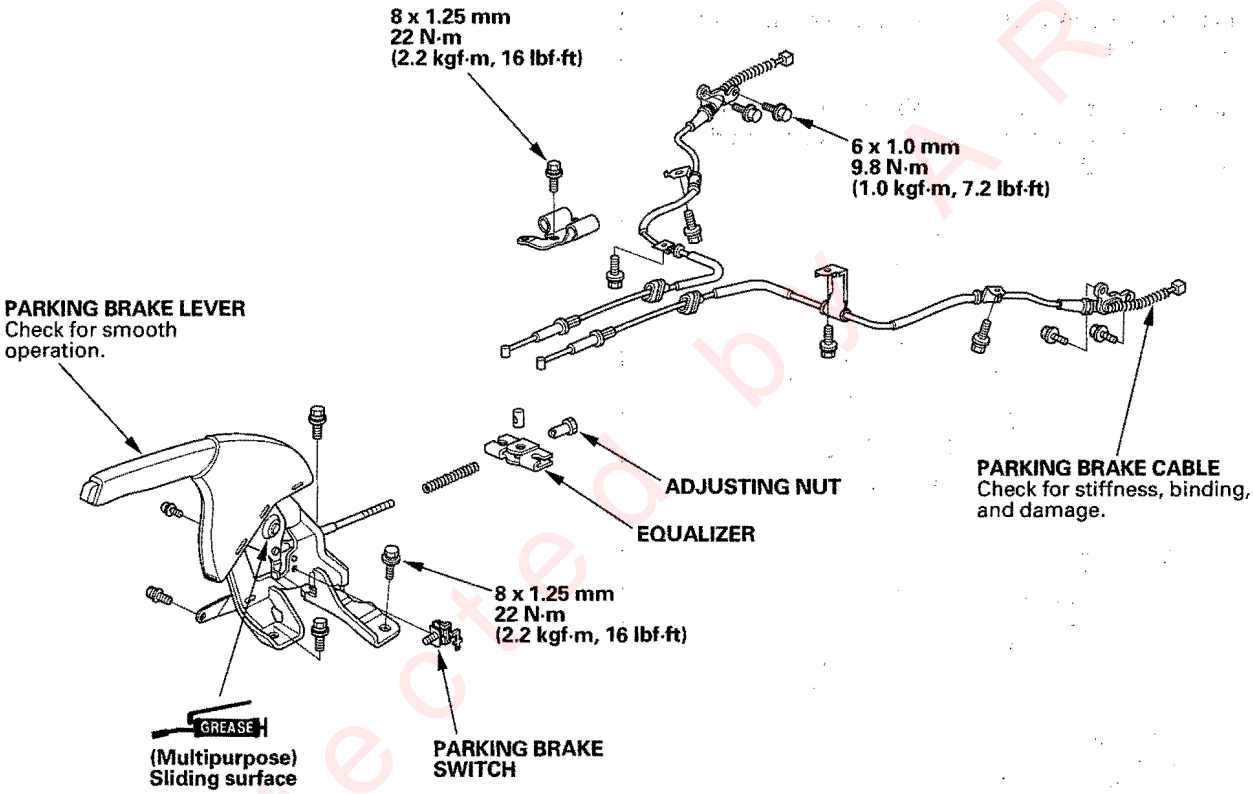

Protected by AR

(cont'd)

Parking Brake Cable Replacement (cont'd)

Replacement

NOTE: The parking brake cable must not be bent or distorted. This will lead to stiff operation and premature cable failure. Refer to the Exploded View as needed during this procedure.

1. Remove the parking brake shoes, and disconnect the parking brake cable from the brake shoe (see page 19-32).

2. Remove the parking brake cable mounting bolts from the backing plate (A), and remove the parking brake cable (B).

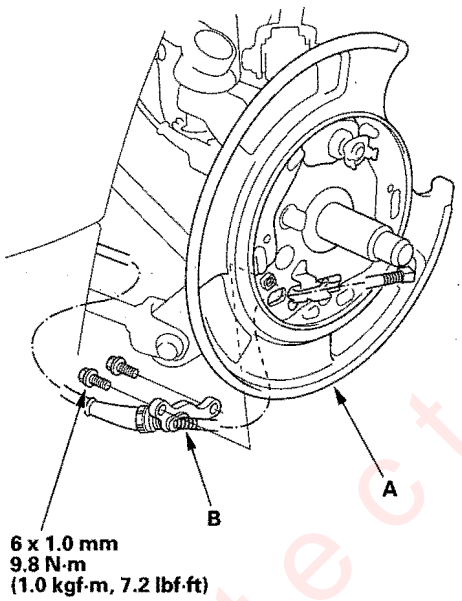

3. Install the parking brake cable in the reverse order of removal, and adjust the parking brake (see page 19-7). Apply the parking brake firmly 10 times, then adjust it again.

Protected by AR

Brakes

Conventional Brake Components 19-1

VSA (Vehicle Stability Assist) System Components
Component Location Index 19-42
General Troubleshooting Information 19-43
DTC Troubleshooting Index 19-46
Symptom Troubleshooting Index 19-47
System Description 19-48
Circuit Diagram 19-60
DTC Troubleshooting 19-63
Symptom Troubleshooting 19-85
Steering Angle Sensor Replacement 19-92
Yaw Rate-Lateral Acceleration Sensor Replacement 19-93
VSA Sensor Neutral Position Memorization 19-94
VSA Off Switch Test 19-95
VSA Modulator-Control Unit Removal and Installation 19-96
Wheel Sensor Inspection 19-98
Wheel Sensor Replacement 19-99

Protected by AR



VSA System Components

Component Location Index

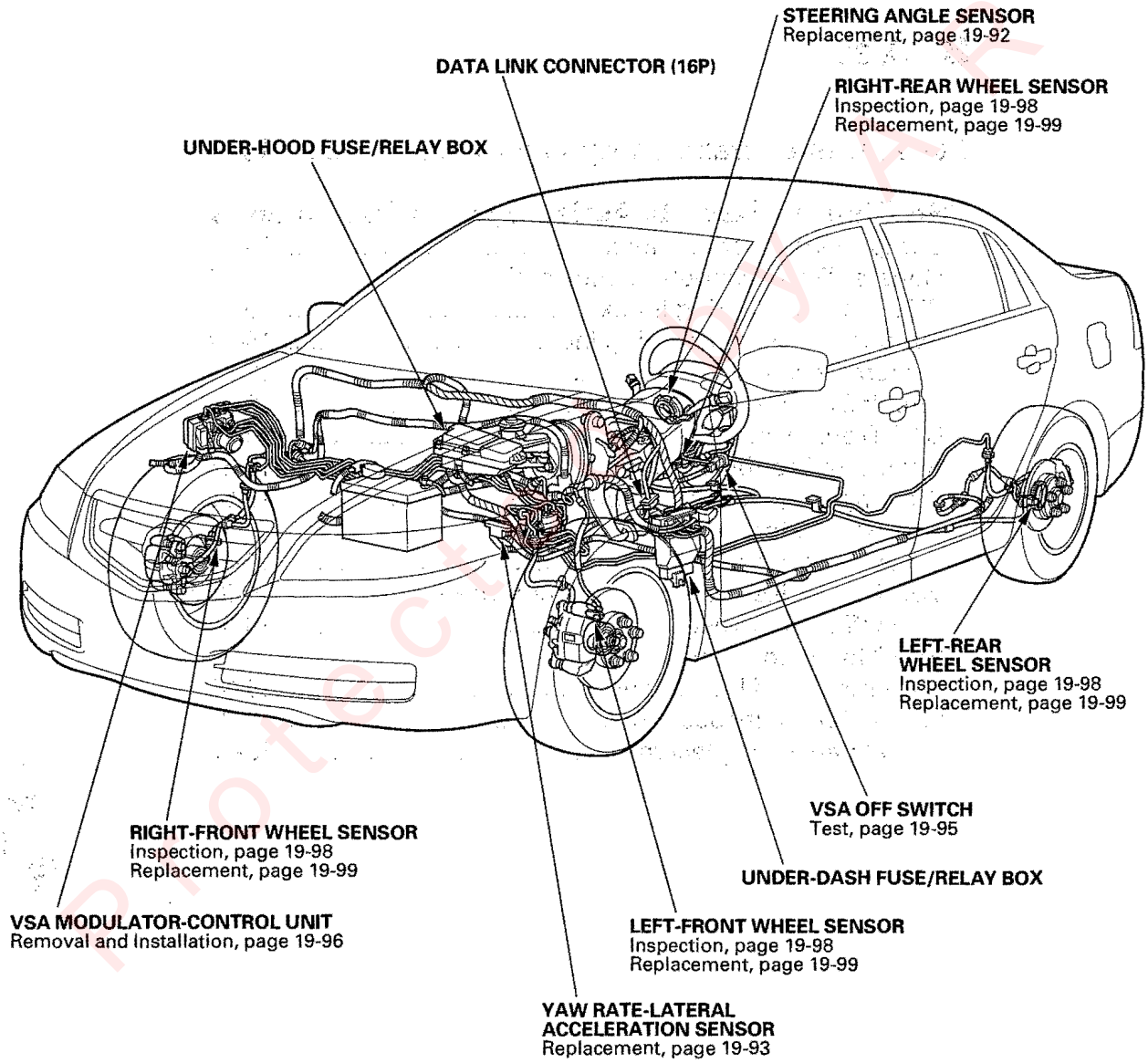

Protected by

General Troubleshooting Information

System Indicator

This system has four indicators: ABS indicator (A), VSA indicator (B), VSA activation indicator (C) and brake system indicator (D). When the system detects a problem, it illuminates the appropriate indicators. Depending on the failure, the control unit determines which indicators are turned on.

- When ABS function is lost:
  ABS indicator, VSA indicator and VSA activation indicator turn on.
- When VSA function is lost:
  VSA indicator and VSA activation indicator turn on.
- When all functions are lost:
  All four indicators turn on.
- When the gauge control module detects F-CAN circuit problem:
  ABS indicator, VSA indicator and brake system indicator turn on.

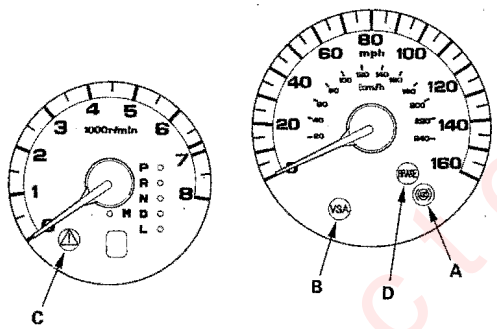

ABS/VSA Indicator

- If the system is OK, the ABS and VSA indicators will go off 2 seconds after turning the ignition switch ON (II).
- The ABS and VSA indicators come on when the control unit detects a problem in the system. However, even though the system is operating properly, the activation indicator may come on under these conditions:
  - Only the drive wheel rotates
  - One drive wheel is stuck
  - The vehicle goes into a spin
  - The ABS or VSA continues to operate for a long time
  - The vehicle is subjected to an electrical signal disturbance
  - The VSA switch has been manually turened off.

To determine the actual cause of the problem, question the customer about the problem, taking these conditions into consideration.

- When a problem is detected and the ABS indicator comes on, but not the VSA indicator, there are cases when the indicator stays on until the ignition switch is turned OFF, and cases when the indicator goes off automatically when the system returns to normal.
  - DTC 61 or 62:
    The ABS and VSA indicators go off automatically when the system returns to normal.
  - DTC 11, 13, 15, 17, 31, 32, 33, 34, 35, 36, 37, 38, 53, 54, 71, 81, 112, 121, 122, 123 or 124:
    The ABS and VSA indicators stay on until the ignition switch is turned OFF whether or not the system returns to normal.
  - DTC 12, 14, 16, 18, 21, 22, 23, 24, 41, 42, 43, 44, 51 or 52:
    The ABS and VSA indicators stay on until the system returns to normal after the vehicle is driven.
  - DTC 25, 26, 27, 64, 65, 66, 68, 83, 84 or 86:
    The VSA indicator stays on until the ignition switch is turned OFF whether or not the system returns to normal.

(cont'd)

Protected by

General Troubleshooting Information (cont'd)

Diagnostic Trouble Code (DTC)

- The memory can hold any number of DTCs. However, when the same DTC is detected more than once, the more recent DTC is written over the earlier one. Therefore, when the same problem is detected repeatedly, it is memorized as a single DTC.
- The DTCs are indicated in ascending number order, not in the order they occur.
- The DTCs are memorized in the EEPROM (non-volatile memory). Therefore, the memorized DTCs cannot be canceled by disconnecting the battery. Do the specified procedures to clear the DTCs.

Self-diagnosis

- Self-diagnosis can be classified into two categories:
  - Initial diagnosis: Done right after the ignition switch is turned ON (II) and until the ABS or VSA indicators go off.
  - Regular diagnosis: Done right after the initial diagnosis until the ignition switch is turned OFF.
- When the system detects a problem, the VSA control unit shifts to fail-safe mode.

Kickback

The pump motor operates when the ABS or VSA is functioning, and the fluid in the reservoir is forced out to the master cylinder, causing kickback at the brake pedal.

Pump Motor

- The pump motor operates when the ABS or VSA is functioning.
- The VSA control unit checks the pump motor operating during initial diagnosis when the vehicle is driven over 10 mph (15 km/h) the first time after the ignition switch is turned ON (II). You may hear the motor operate at this time, but it is normal.

Brake Fluid Replacement/Air Bleeding

Brake fluid replacement and air bleeding procedures are identical to the procedures used on vehicles not equipped with VSA (see page 19-9).

How to Troubleshoot DTCs

The troubleshooting flowchart procedures assume that the cause of the problem is still present and the ABS and/or VSA indicator is still on. Following the flowchart when the ABS and/or VSA indicator does not come on can result in incorrect diagnosis.
The connector illustrations show the female terminal connectors with a single outline and the male terminal connectors with a double outline.

1. Question the customer about the conditions when the problem occured, and try to reproduce the same conditions for troubleshooting. Find out when the ABS and/or VSA indicator came on, such as during ABS control, after ABS control, when vehicle was travelling at a certain speed, etc.

2. When the ABS or VSA indicator does not come on during the test drive, but troubleshooting is done based on the DTC, check for loose connectors, poor contact of the terminals, etc. before you start troubleshooting.

3. After troubleshooting, or repairs are done, clear the DTCs, and test-drive the vehicle under the same conditions as originally set with the DTCs. Make sure the ABS and VSA indicators do not come on.

Protected by R

How to Retrieve DTCs

1. With the ignition switch OFF, connect the HDS to the 16P data link connector (DLC) (A) under the left side of the dashboard.

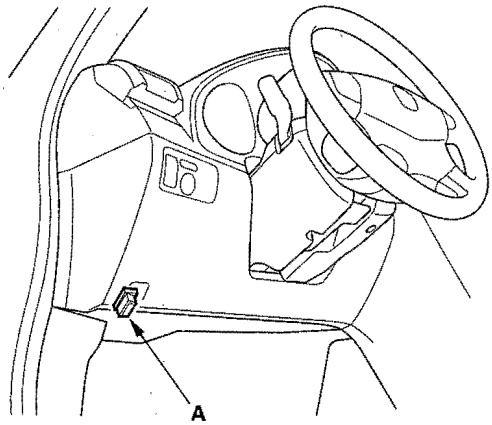

2. Turn the ignition switch ON (II), and follow the prompts on the HDS to display the DTC(s) on the screen. After determining the DTC, refer to the DTC Troubleshooting.

   NOTE: See the HDS help menu for specific instructions.

How to Clear DTCs

NOTE: You cannot clear the DTCs manually.

1. With the ignition switch OFF, connect the HDS to the 16P data link connector (DLC) (A) under the left side of the dashboard.

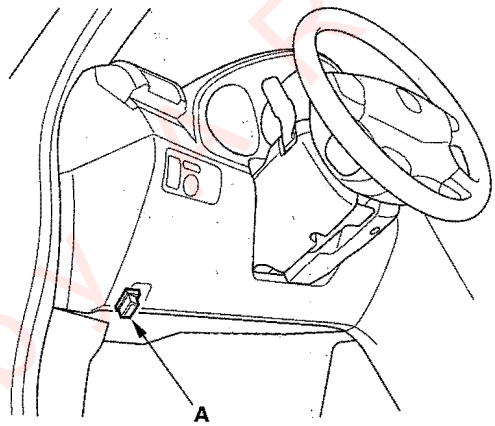

2. Turn the ignition switch ON (II), and clear the DTC(s) by following the screen prompts on the HDS.

   NOTE: See the HDS help menu for specific instructions.

3. If the VSA activation indicator remains on, but the VSA and ABS indicators are OFF, do the VSA sensor neutral position memorization (see page 19-94).

Protected by

DTC Troubleshooting Index

DTC	Detection Item	Note
11	Right-front wheel sensor (open/short to body ground/short to power)	(see page 19-63)
12	Right-front wheel sensor (electrical noise/intermittent interruption)	(see page 19-65)
13	Left-front wheel sensor (open/short to body ground/short to power)	(see page 19-63)
14	Left-front wheel sensor (electrical noise/intermittent interruption)	(see page 19-65)
15	Right-rear wheel sensor (open/short to body ground/short to power)	(see page 19-63)
16	Right-rear wheel sensor (electrical noise/intermittent interruption)	(see page 19-65)
17	Left-rear wheel sensor (open/short to body ground/short to power)	(see page 19-63)
18	Left-rear wheel sensor (electrical noise/intermittent interruption)	(see page 19-65)
21	Right-front magnetic encorder	(see page 19-66)
22	Left-front magnetic encorder	(see page 19-66)
23	Right-rear pulser	(see page 19-66)
24	Left-rear pulser	(see page 19-66)
25	Yaw rate sensor	(see page 19-67)
26	Lateral acceleration sensor	(see page 19-69)
27	Steering angle sensor	(see page 19-71)
31	ABS solenoid	(see page 19-73)
32	ABS solenoid	(see page 19-73)
33	ABS solenoid	(see page 19-73)
34	ABS solenoid	(see page 19-73)
35	ABS solenoid	(see page 19-73)
36	ABS solenoid	(see page 19-73)
37	ABS solenoid	(see page 19-73)
38	ABS solenoid	(see page 19-73)
41	Right-front wheel lock	(see page 19-74)
42	Left-front wheel lock	(see page 19-74)
43	Right-rear wheel lock	(see page 19-74)
44	Left-rear wheel lock	(see page 19-74)
51	Motor lock	(see page 19-74)
52	Motor stuck OFF	(see page 19-74)
53	Motor stuck ON	(see page 19-75)
54	Fail-safe relay	(see page 19-76)
61	Low +B-FSR voltage	(see page 19-77)
62	High +B-FSR voltage	(see page 19-77)
64	Sensor power voltage	(see page 19-78)
65	Brake fluid level	(see page 19-79)
66	VSA pressure sensor (inside of VSA modulator-control unit)	(see page 19-79)
68	Brake pedal position switch	(see page 19-80)
71	Different diameter tire	(see page 19-80)
81	Central Processing Unit (CPU)	(see page 19-81)
83	ECM/PCM	(see page 19-82)
84	VSA sensor neutral position	(see page 19-82)
86	F-CAN communication	(see page 19-83)
107	TCS operation	(see page 19-83)
108	VSA operation	(see page 19-83)
112	Internal power source stuck OFF	(see page 19-84)
121	VSA solenoid	(see page 19-85)
122	VSA solenoid	(see page 19-85)
123	VSA solenoid	(see page 19-85)
124	VSA solenoid	(see page 19-85)

Protected by A

Symptom Troubleshooting Index

Symptom	Diagnostic procedure
ABS indicator does not come on	Symptom Troubleshooting (see page 19-85)
ABS indicator does not go off, and no DTCs are stored	Symptom Troubleshooting (see page 19-86)
Brake system indicator does not come on (check bulb operation with parking brake)	Symptom Troubleshooting (see page 19-87)
Brake system indicator does not go off	Symptom Troubleshooting (see page 19-88)
VSA indicator does not come on	Symptom Troubleshooting (see page 19-88)
VSA indicator does not go off, and no DTCs are stored	Symptom Troubleshooting (see page 19-89)
VSA activation indicator does not come on	Symptom Troubleshooting (see page 19-90)
VSA activation indicator does not go off, and no DTCs are stored	Symptom Troubleshooting (see page 19-90)

Protected by A

VSA System Components

System Description

VSA Control Unit Inputs and Outputs for 47P Connector (connector attached to the VSA control unit. Back probe the terminals when testing in the table.)

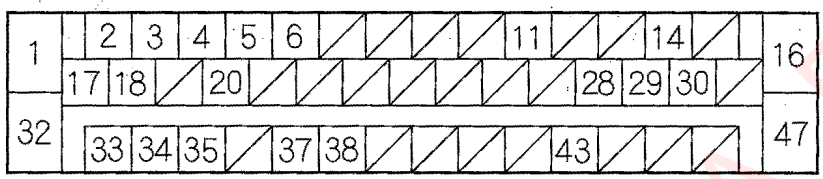

Wire side of female terminals

Terminal number	Wire color	Terminal sign	Description	Measurement (VSA control unit 47P connector connected)		
				Terminal	Conditions	Voltage
1	WHT	+B-FSR	Power source for the fail-safe relay	1−GND	At all times	Battery voltage
2	YEL/RED	RL +B	Detects left-rear wheel sensor signal	2−3	Ammeter connected in series with the wheel speed sensor, then ignition switch ON (II).*1 Rotate the appropriate wheel slowly.	About 7 mA to about 14 mA alternately
3	RED	RL-GND				
4	BLU/WHT	FL +B	Detects left-front wheel sensor signal	4−20		
5	GRN/YEL	RR +B	Detects right-rear wheel sensor signal	5−6		
6	BLU/YEL	RR-GND				
11	LT BLU	K-LINE	Communications with HDS	11−GND	Ignition switch ON (II)	Battery voltage
14	WHT	CAN-H	F-CAN communication circuit	14−GND	Ignition switch ON (II)	About 2.5 V
16	WHT/RED	+B-MR	Power souce for the motor relay	16−GND	At all times	Battery votage

* 1: If a DTC is set during set up, turn the ignition switch OFF, then back ON (II) before testing.

Protected by AR

Terminal number	Wire color	Terminal sign	Description	Measurement (VSA control unit 47P connector connected)		
				Terminal	Conditions	Voltage
17	BLU	FR-GND	Detects right-front wheel sensor signal	17	Ammeter connected in series with the wheel speed sensor, then ignition switch ON (II).*1 Rotate the appropriate wheel slowly.	About 7 mA to about 14 mA alternately
18	GRN/ BLK	FR +B		18		
20	BRN/ WHT	FL-GND	Detects left-front wheel sensor signal	4—20		
28	BLU	STR-A	Detects steering angle sensor signal	28—GND	Ignition switch ON (II) Turn steering wheel very slowly	about 1—5 V alternately
29	BLU/ RED	STR-D	Detects steering angle sensor signal	29—GND	Ignition switch ON (II) Steering wheel in straight ahead position, then turned off of center	about 1 V on center about 4 V off center
30	RED	CAN-L	F-CAN communication circuit	30—GND	Ignition switch ON (II)	2.3 V

* 1: If a DTC is set during set up, turn the ignition switch OFF, then back ON (II) before testing.

Protected by MAR

(cont'd)

System Description (cont'd)

VSA Control Unit Inputs and Outputs for 47P Connector (cont'd)

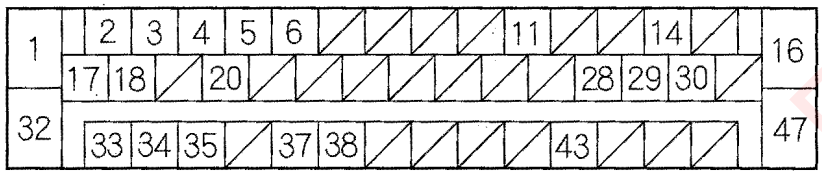

Wire side of female terminals

Terminal number	Wire color	Terminal sign	Description	Measurement (VSA control unit 47P connector connected)		
				Terminal	Conditions	Voltage
32	BLK	GND	Ground for the VSA modulator-control unit	32 – GND	Under all conditions	0 V
33	YEL/ BLK	SGND	Ground for the sensors	33 – GND	Ignition switch ON (II)	0 V
34	BLU/ BLK	YAW	Detects YAW rate sensor signal	34 – GND	Ignition switch ON (II) Parked on level ground	About 2.5 V
35	RED	SVCC	Power source for the sensors	35 – GND	Ignition switch ON (II)	About 5 V
37	GRN	GLAT	Detects lateral acceleration sensor signal	37 – GND	Ignition switch ON (II)	About 2.5 V
38	BLK/ YEL	IG1	Power source for activating the system	38 – GND	Ignition switch ON (II)	Battery voltage
43	GRN/ WHT	STR-B	Detects steering angle sensor signal	43 – GND	Ignition switch ON (II) Turn steering wheel very slowly	About 1 – 4 V
47	BLK	MR-GND	Ground for the pump motor	47 – GND	Under all conditions	0 V

Protected by AR

ABS Features

When the brake pedal is pressed while driving, the wheels can lock before the vehicle comes to a stop. In such an event, the maneuverability of the vehicle is reduced if the front wheels are locked, and the stability of the vehicle is reduced if the rear wheels are locked, creating an extremely unstable condition. The ABS precisely controls the slip rate of the wheels to ensure maximum grip force from the tires, and it thereby ensures maneuverability and stability of the vehicle.

The ABS calculates the slip rate of the wheels based on the vehicle speed and the wheel speed, then it controls the brake fluid pressure to reach the target slip rate.

Grip Force of Tire and Road Surface

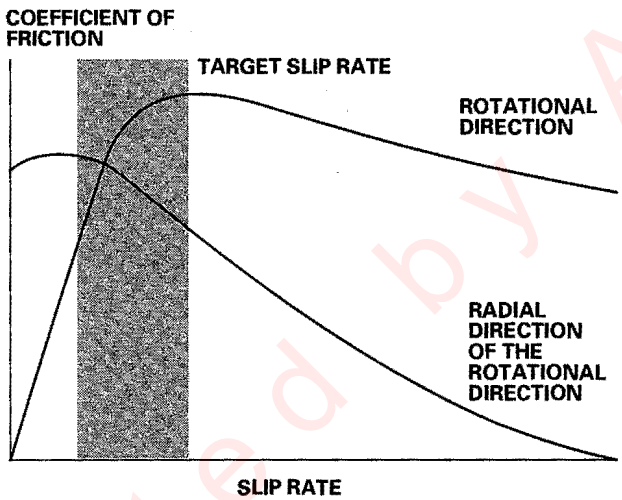

TCS Features

The TCS provides low-speed traction. When a drive wheel loses traction on a slippery road surface and starts to spin, the VSA modulator-control unit applies brake pressure to slow the spinning wheel. At that time, the VSA control unit sends a traction control signal to the ECM/PCM to reduce engine power.

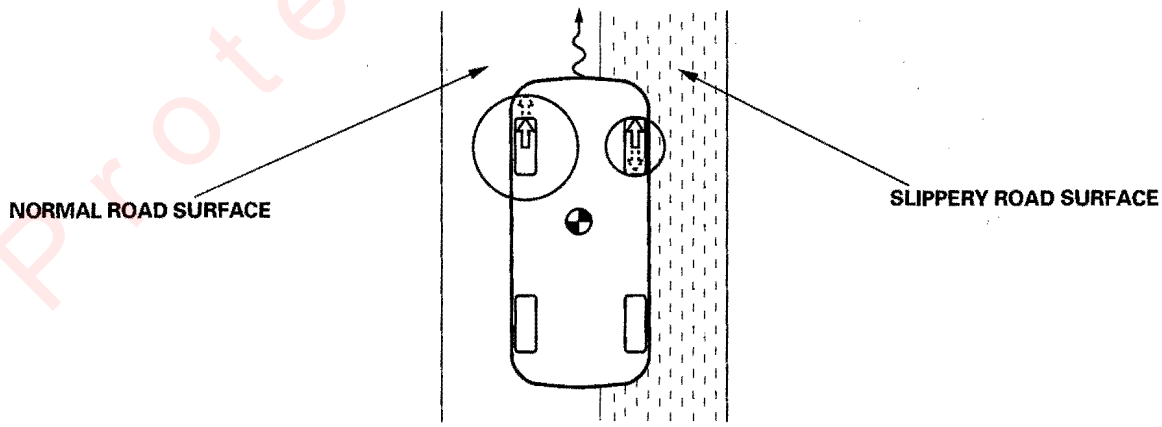

(cont'd)

Protected by AR

System Description (cont'd)

VSA System Features

Oversteer control
Applies the brake to the front and rear outside wheels

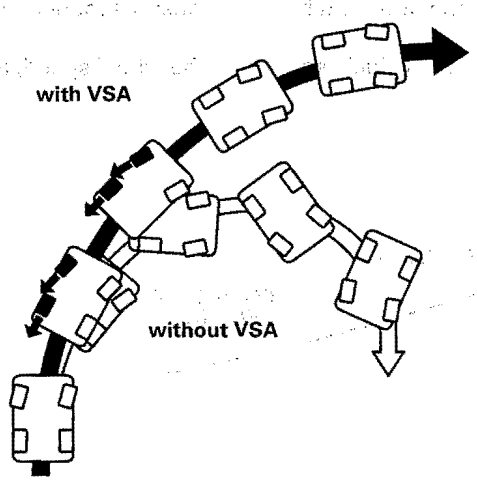

The brake makes the yaw rate opposite to the turning direction

Understeer control (in acceleration)
- Applies the brake to the front and rear inside wheels
- Controls the engine torque

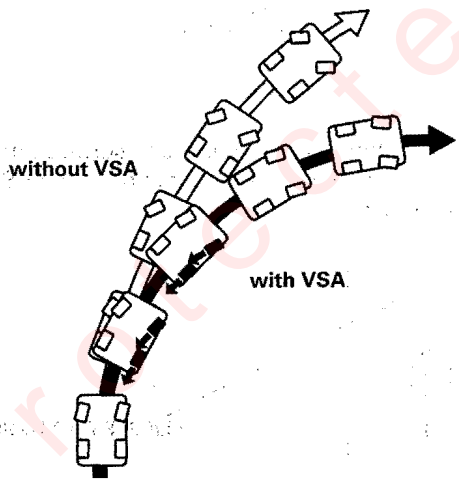

The brake increases the yaw rate toward the turning direction

The throttle control effect;
- **reduces vehicle speed**
- **increases cornering force**

Protected by AR

Electronic Brake Distribution (EBD)

Electronic Brake Distribution (EBD) has been added to the VSA system. EBD eliminates the need for an external, mechanical proportioning valve and improves overall braking performance.

When the vehicle is heavily loaded, most of the increase in weight is born by the rear wheels, increasing braking capability. Proportioning valves maintain a fixed distribution of brake pressure between the front and the rear wheels, making it very difficult to fully utilize increased rear wheel braking capability. EBD varies brake pressure distribution according to load, using input from the wheel speed sensors, which improves overall braking performance.

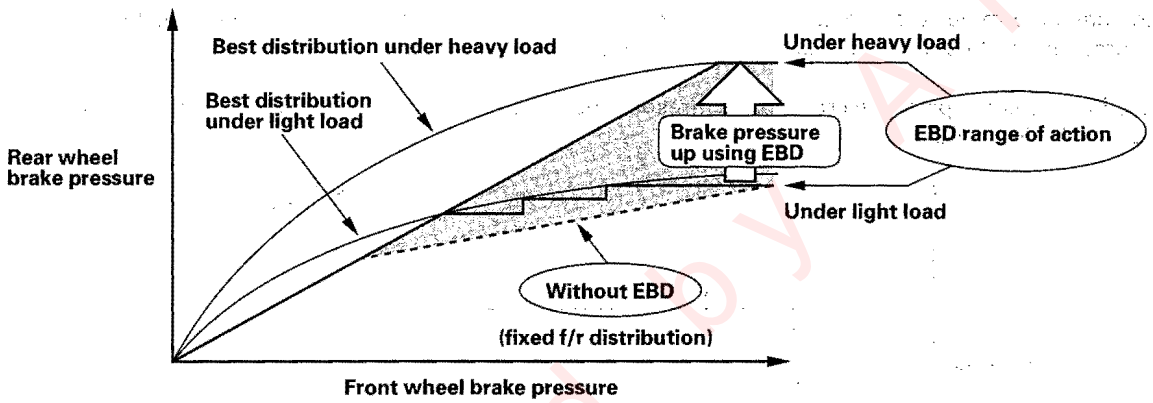

Normal Braking
Under normal braking conditions, brake pressure is evenly distributed between the front and rear brakes, and EBD is not used.

Firm Braking
Under hard braking conditions, the VSA control unit monitors wheel speed in order to allow a maximum amount of brake distribution individually to the rear wheels. Once the VSA control unit detects that one or both rear wheels are nearing their maximum braking potential, the inlet valve closes for one or both rear wheels, maintaining the current pressure. If the traction is improved, and the wheel(s) is no longer nearing its limits, the VSA control unit will open the inlet solenoid allowing additional pressure to be distributed to the rear wheel. The rear wheels are controlled independently of each other during EBD function.

If during EBD function the VSA control unit determines that the wheels are begining to slip more than a predetermined amount, the control unit abandons EBD control and shifts to select low 3-channel ABS control.

(cont'd)

System Description (cont'd)

Brake Assist

Brake assist has been added to the VSA system. Brake assist helps ensure that any driver can achieve the full braking potential of the vehicle by increasing brake system pressure in a panic situation, bringing the vehicle into a full ABS stop.

Each time the ignition switch is turned ON, the VSA control unit learns the current driver's normal braking characteristics by monitoring the brake pressure sensor and the brake pedal position switch at each stop. Using these inputs and their values, the VSA control unit is able to learn the driver's normal braking habits, and then determine the difference between a normal stop and a panic stop for the individual driver of the vehicle. If during a panic stop the VSA control unit determines that the brake system pressure increases above a learned threshold in less than a learned amount of time, the VSA control unit engages brake assist.

Because the Brake system pressure crossed the threshold before the time threshold had expired, the VSA control unit goes into Brake Assist mode.

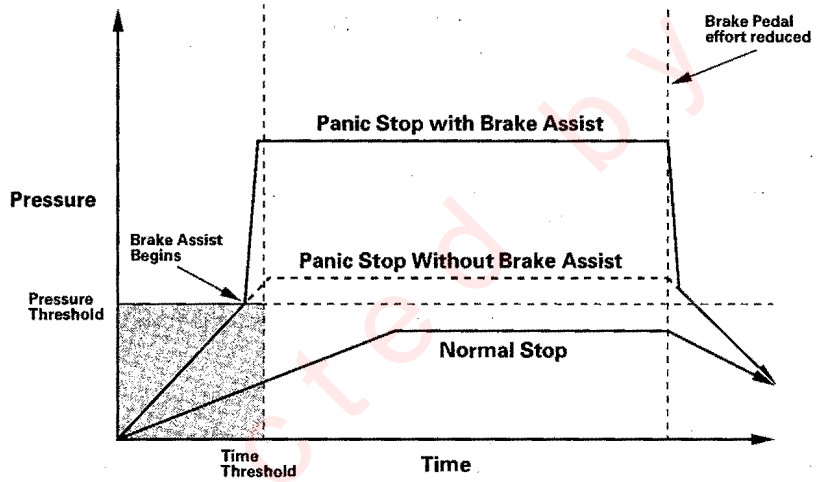

Normal Braking
During normal braking conditions, brake assist does not affect brake system pressure.

Panic Stop
During a panic stop, the control unit turns the VSA pump ON, and opens the inlet valve. This brings the brake system pressure up high enough to cause a full ABS stop. As soon as the brake pedal is released, brake assist is stopped and the brake system returns to normal operation.

Protected by ACR

Modulator Unit

The modulator unit consists of the inlet solenoid valve, outlet solenoid valve, VSA normally open (NO) solenoid valve, VSA normally closed (NC) solenoid valve, reservoir, pump, pump motor, and the damping chamber.
The modulator controls the caliper fluid pressure directly. It is a circulating-type modulator because the brake fluid circulates through the caliper, the reservoir, and the master cylinder.
The hydraulic control has three modes: pressure intensifying, pressure retaining, and pressure reducing.
The hydraulic circuit is an independent four channel type, one channel for each wheel.

ABS Control

Pressure intensifying mode
VSA NO valve open, VSA NC valve closed, inlet valve open, outlet valve closed.
Master cylinder fluid is pumped out to the caliper.

Pump Motor
When starting the pressure reducing mode, the pump motor is ON. When stopping ABS operation, the pump motor is OFF.
The reservoir fluid is pumped out by the pump, through the damping chamber, to the master cylinder.

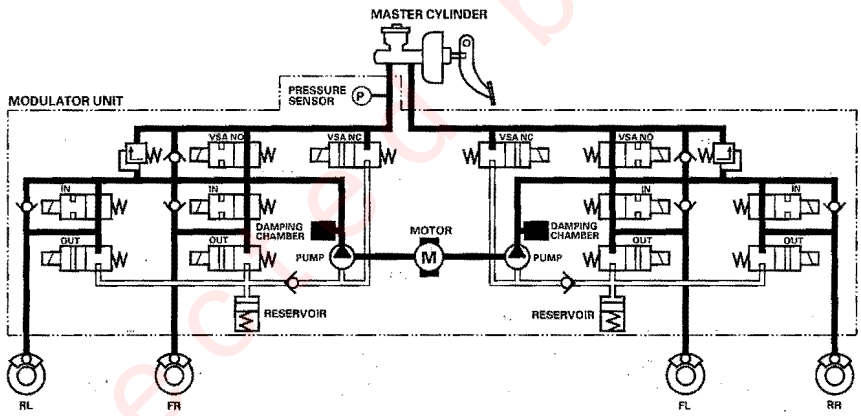

Pressure retaining mode
VSA NO valve open, VSA NC valve closed, inlet valve closed, outlet valve closed.
Caliper fluid is retained by the inlet valve and outlet valve.

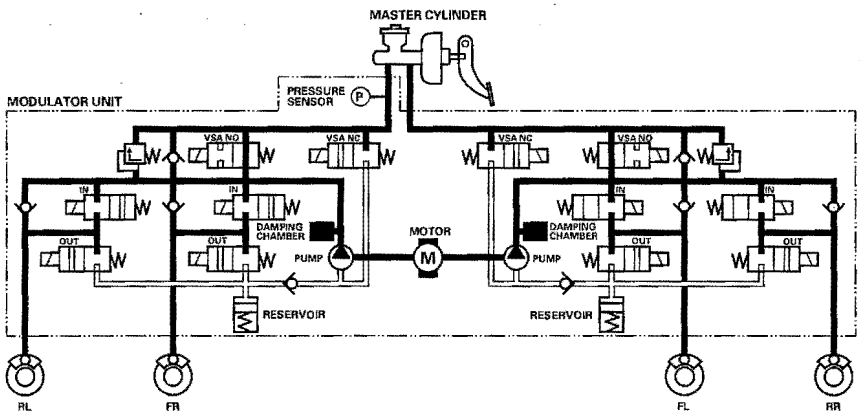

(cont'd)

System Description (cont'd)

Pressure reducing mode
VSA NO valve open, VSA NC valve closed, inlet valve closed, outlet valve open.
Caliper fluid flows through the outlet valve to the reservoir.

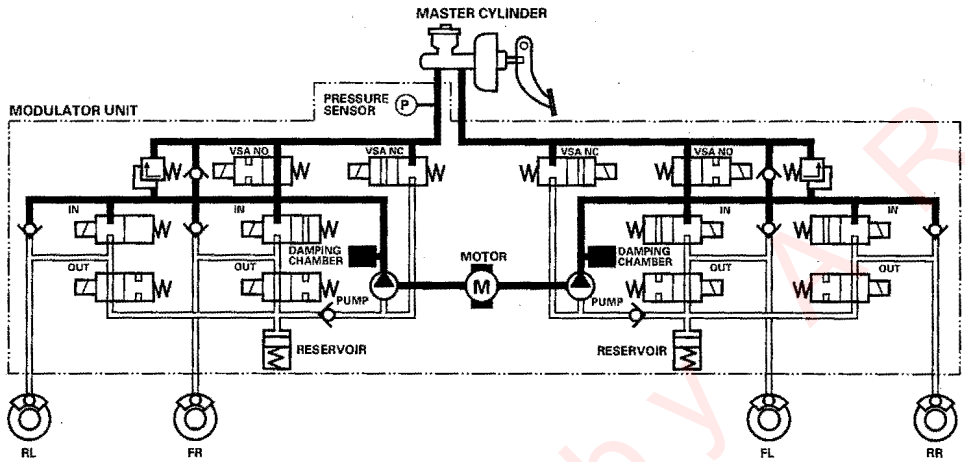

TCS Control

Pressure intensifying mode
VSA NO valve closed, VSA NC valve open, inlet valve open, outlet valve closed, pump motor ON.
The reservoir and master cylinder fluid is pumped out by the pump, through the damping chamber, to the front caliper.

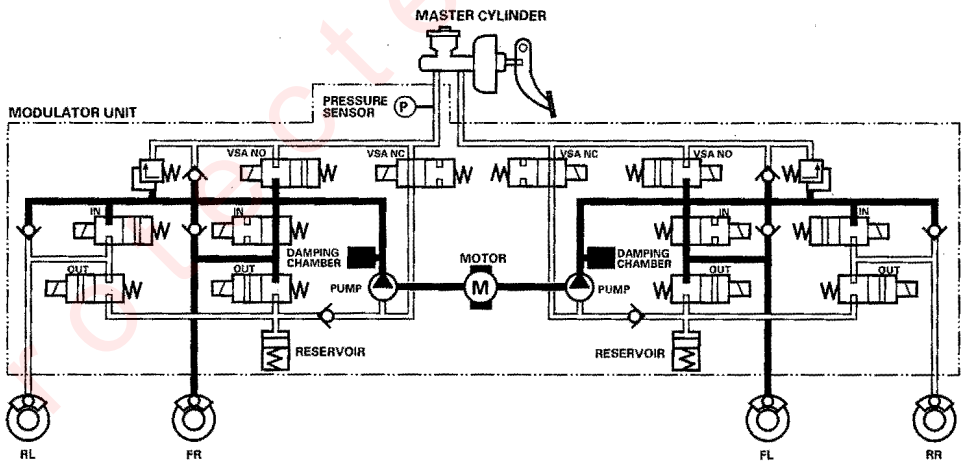

Protected by MAR

Pressure retaining mode
VSA NO valve closed, VSA NC valve open, inlet valve closed, outlet valve closed, pump motor ON.
Front caliper fluid is retained by the inlet valve and outlet valve.

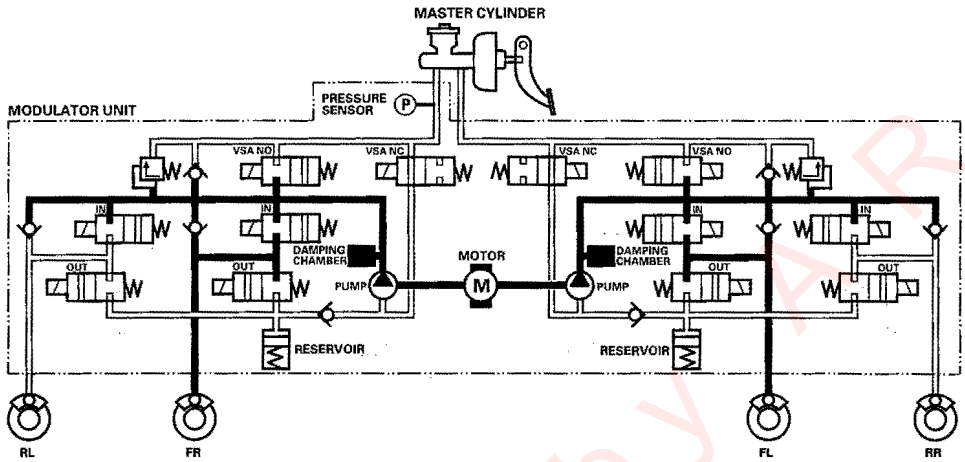

Pressure reducing mode
VSA NO valve open, VSA NC valve closed, inlet valve closed, front outlet valve open, pump motor ON.
Caliper fluid flows through the outlet valve to the reservoir.

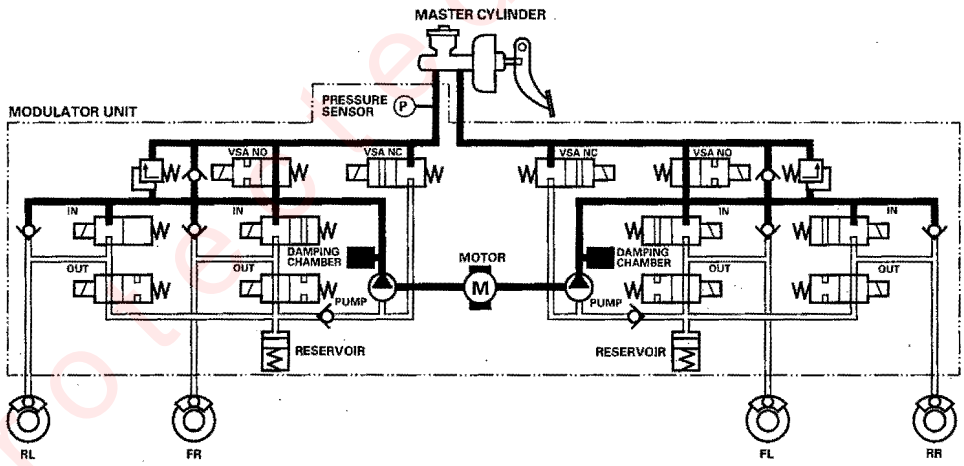

Protected by AR

(cont'd)

System Description (cont'd)

VSA Control

Pressure intensifying mode
VSA NO valve closed, VSA NC valve open, inlet valve open, outlet valve closed, pump motor ON.
The reservoir and master cylinder fluid is pumped out by the pump, through the damping chamber, to the front and rear calipers.

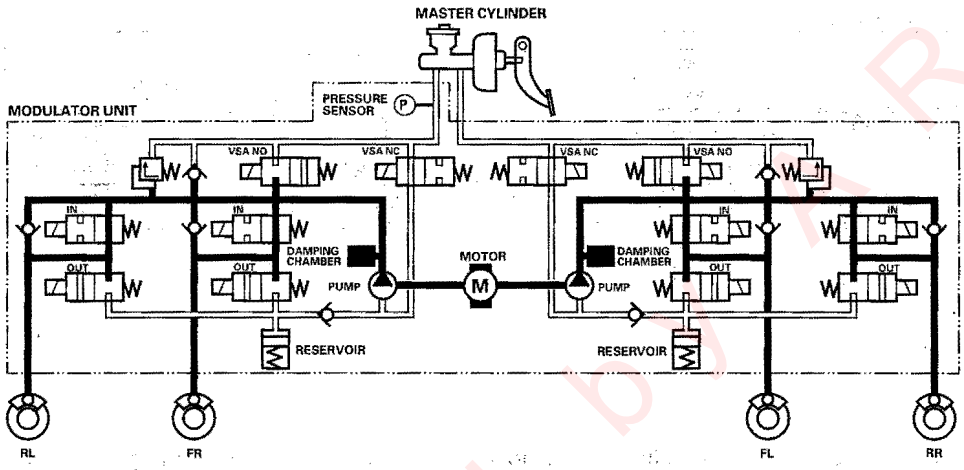

Pressure retaining mode
VSA NO valve closed, VSA NC valve open, inlet valve closed, outlet valve closed, pump motor ON.
Front and rear caliper fluid is retained by the inlet valve and outlet valve.

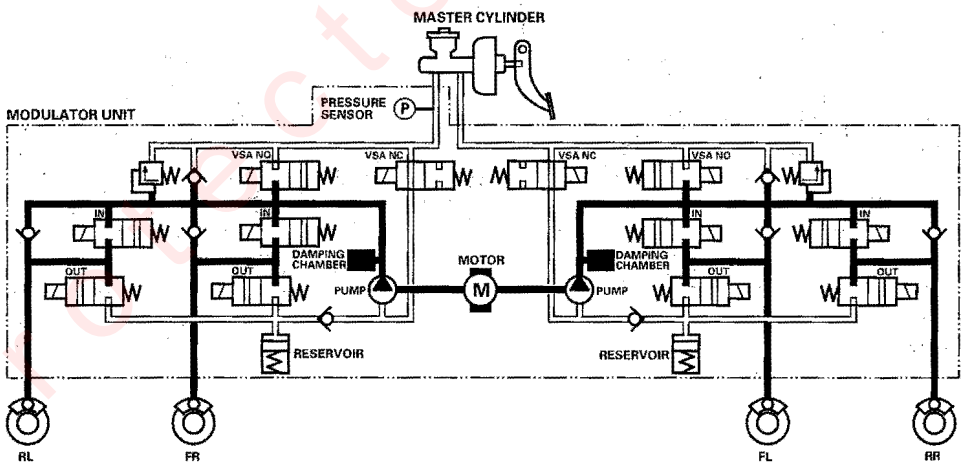

Protected by

Pressure reducing mode

VSA NO valve open, VSA NC valve closed, inlet valve closed, outlet valve open, pump motor ON. Caliper fluid flows through the outlet valve to the reservoir.

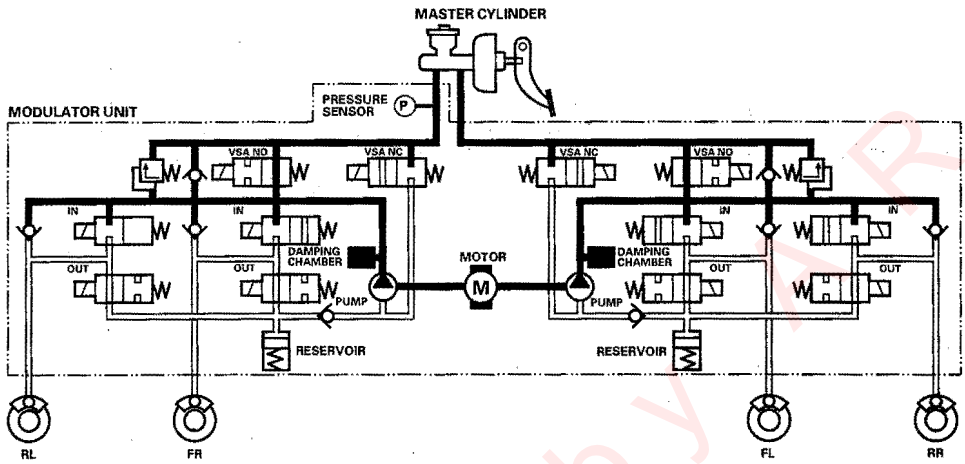

Protected by MR

VSA System Components

Circuit Diagram

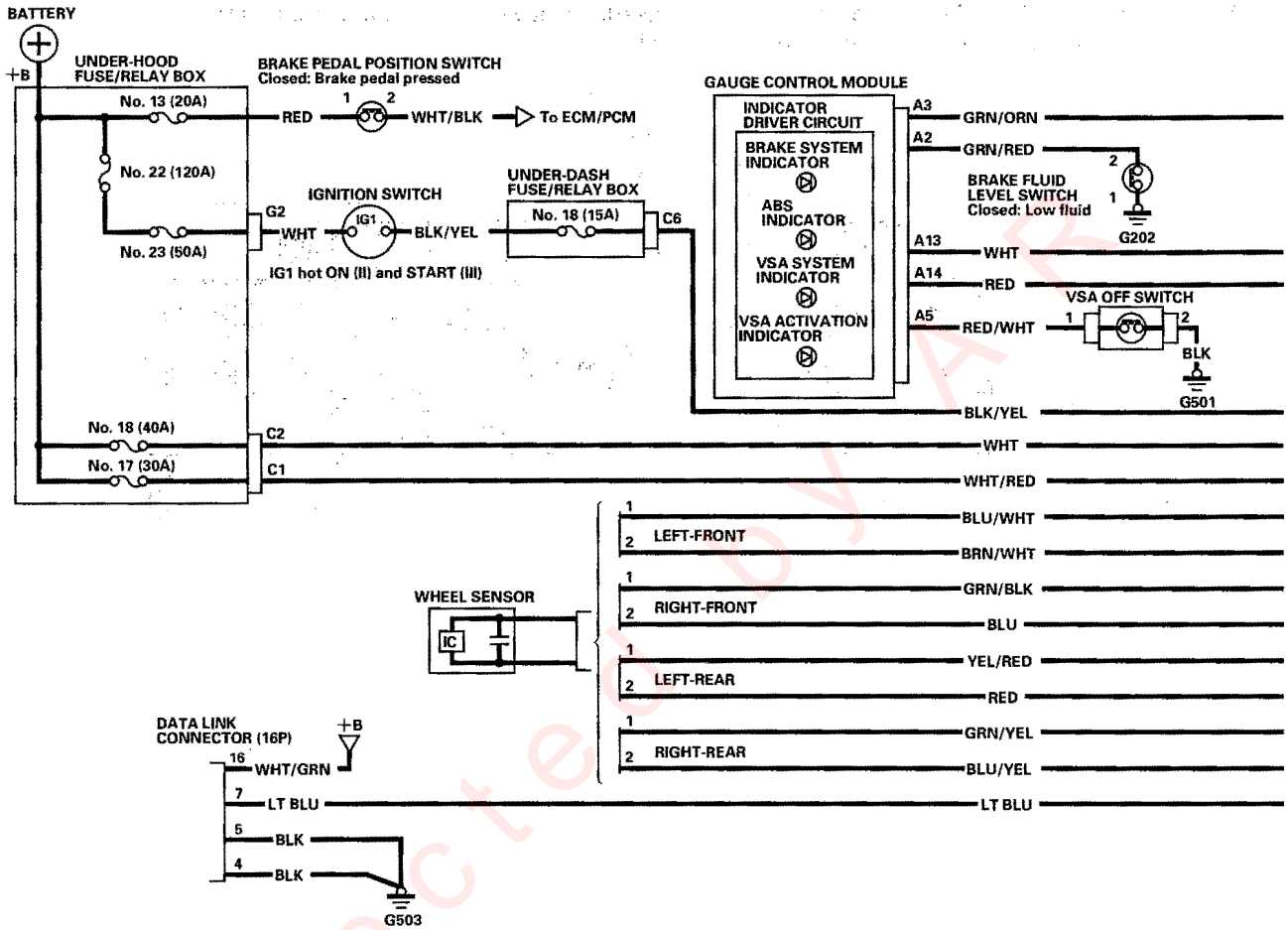

Protected by AR

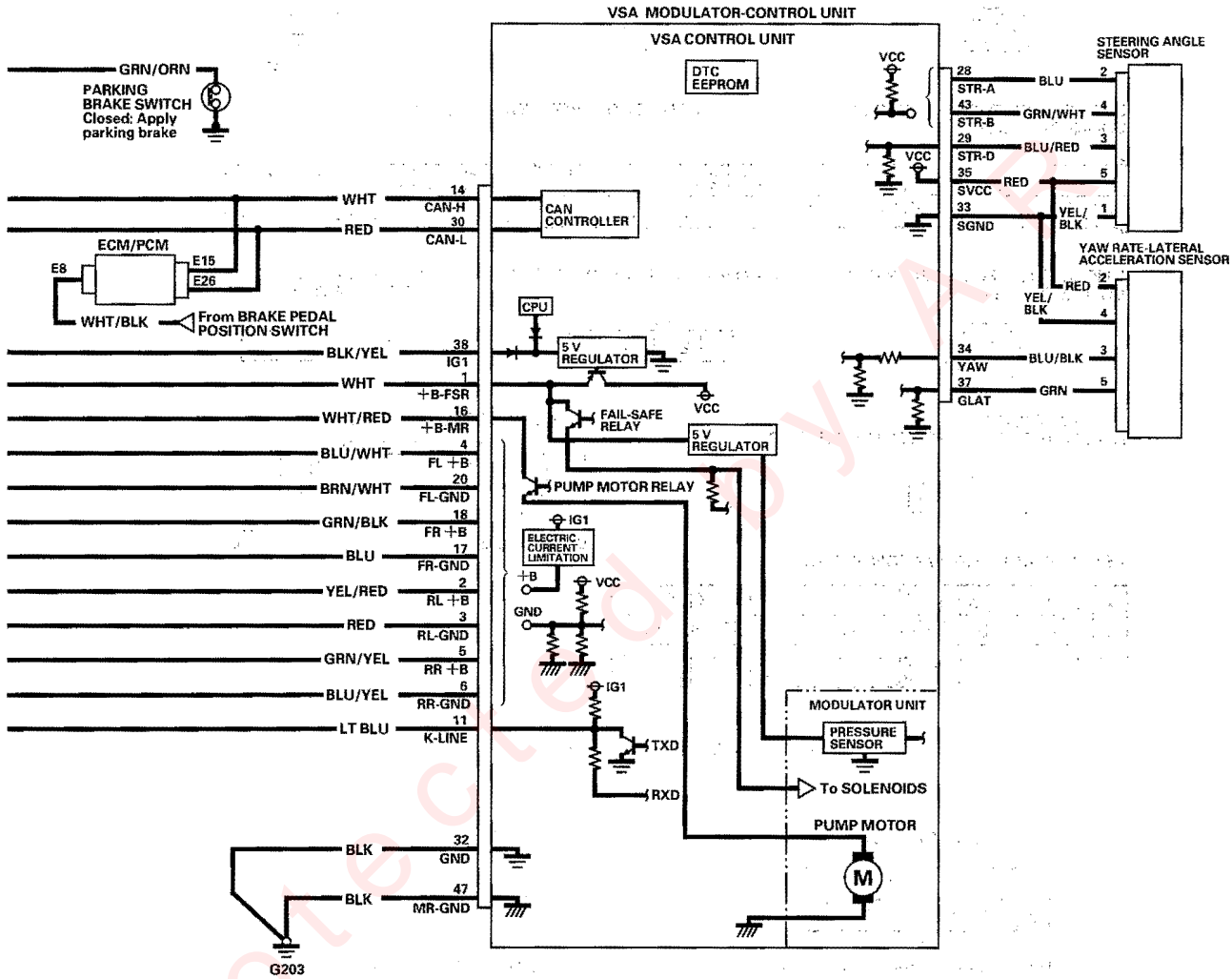
VSA MODULATOR-CONTROL UNIT
VSA CONTROL UNIT
DTC EEPROM
CAN CONTROLLER
CPU
5 V REGULATOR
FAIL-SAFE RELAY
5 V REGULATOR
PUMP MOTOR RELAY
ELECTRIC CURRENT LIMITATION
MODULATOR UNIT
PRESSURE SENSOR
To SOLENOIDS
PUMP MOTOR
M
TXD
RXD
VCC
GND
+B
IG1
GRN/ORN
PARKING BRAKE SWITCH
Closed: Apply parking brake
WHT
RED
ECM/PCM
E8
E15
E26
WHT/BLK
From BRAKE PEDAL POSITION SWITCH
BLK/YEL
WHT
WHT/RED
BLU/WHT
BRN/WHT
GRN/BLK
BLU
YEL/RED
RED
GRN/YEL
BLU/YEL
LT BLU
14 CAN-H
30 CAN-L
38 IG1
1 +B-FSR
16 +B-MR
4 FL +B
20 FL-GND
18 FR +B
17 FR-GND
2 RL +B
3 RL-GND
5 RR +B
6 RR-GND
11 K-LINE
32 GND
47 MR-GND
G203
STEERING ANGLE SENSOR
28 STR-A
43 STR-B
29 STR-D
35 SVCC
33 SGND
BLU
GRN/WHT
BLU/RED
RED
YEL/BLK
YAW RATE-LATERAL ACCELERATION SENSOR
34 YAW
37 GLAT
BLU/BLK
GRN

(cont'd)

Circuit Diagram (cont'd)

UNDER-HOOD FUSE/RELAY BOX CONNECTOR C (2P)



BRAKE FLUID LEVEL SWITCH 2P CONNECTOR



BRAKE PEDAL POSITION SWITCH 4P CONNECTOR

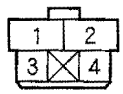

UNDER-DASH FUSE/RELAY BOX CONNECTOR C (12P)

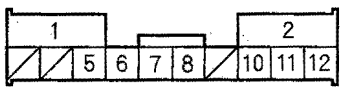

GAUGE CONTROL MODULE CONNECTOR A (30P)

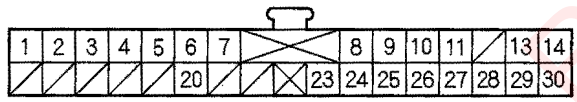

UNDER-HOOD FUSE/RELAY BOX CONNECTOR G (2P)



VSA OFF SWITCH 5P CONNECTOR

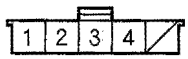

STEERING ANGLE SENSOR 5P CONNECTOR

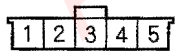

YAW RATE/LATERAL ACCELERATION SENSOR 5P CONNECTOR

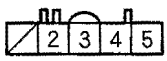

ECM/PCM CONNECTOR E (31P)

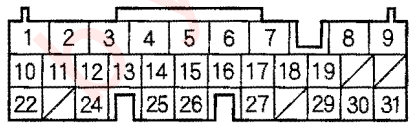

VSA CONTROL UNIT 47P CONNECTOR

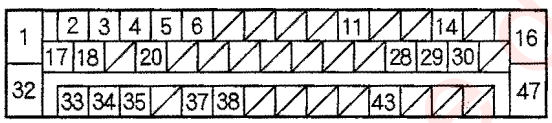

Wire side of female terminals

DATA LINK CONNECTOR (16P)

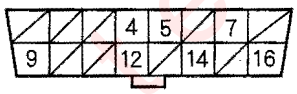

Terminal side of female terminals

WHEEL SENSOR 2P CONNECTOR FRONT/REAR



Terminal side of male terminals

Protected by

DTC Troubleshooting

DTC 11, 13, 15, 17: Wheel Sensor (Short to Power/Short to Body Ground/Open)

1. Clear the DTC using the HDS (see page 19-45).
2. Disconnect the HDS.
3. Turn the ignition switch OFF, then ON (II) again.
4. Test-drive the vehicle.

   Do the VSA or ABS indicator come on?
   YES—Go to step 5.
   NO—Intermittent failure; system is OK at this time. Check for loose or poor connections. ■
5. Disconnect the VSA control unit 47P connector.
6. Start the engine.
7. Measure the voltage between body ground and the appropriate wheel sensor +B and GND terminals of the VSA control unit 47P connector individually (see table).

DTC	Appropriate Terminal	
	+B	GND
11 (Right-front)	FR +B: No. 18	FR-GND: No. 17
13 (Left-front)	FL +B: No. 4	FL-GND No. 20
15 (Right-rear)	RR +B: No. 5	RR-GND: No. 6
17 (Left-rear)	RL +B: No. 2	RL-GND: No. 3

VSA CONTROL UNIT 47P CONNECTOR

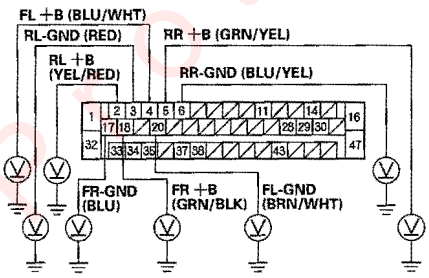

Wire side of female terminals

Is there 1 V or more?
YES—Repair short to power in the wire between the VSA modulator-control unit and the appropriate wheel sensor. ■
NO—Go to step 8.

8. Turn the ignition switch OFF.
9. Check for continuity between body ground and the appropriate wheel sensor +B and GND terminals of the VSA control unit 47P connector individually (see table).

DTC	Appropriate Terminal	
	+B	GND
11 (Right-front)	FR +B: No. 18	FR-GND: No. 17
13 (Left-front)	FL +B: No. 4	FL-GND: No. 20
15 (Right-rear)	RR +B: No. 5	RR-GND: No. 6
17 (Left-rear)	RL +B: No. 2	RL-GND: No. 3

VSA CONTROL UNIT 47P CONNECTOR

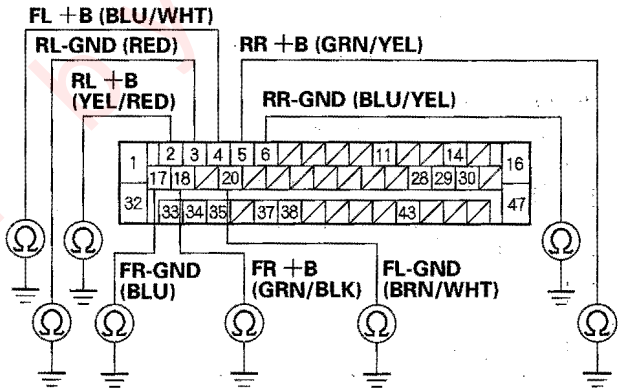

Wire side of female terminals

Is there continuity?

YES—Go to step 10.

NO—Go to step 12.

(cont'd)

DTC Troubleshooting (cont'd)

10. Disconnect the appropriate wheel sensor 2P connector.

11. Check for continuity between body ground and the appropriate wheel sensor +B and GND terminals of the VSA control unit 47P connector individually (see table).

DTC	Appropriate Terminal	
	+B	GND
11 (Right-front)	FR +B: No. 18	FR-GND: No. 17
13 (Left-front)	FL +B: No. 4	FL-GND: No. 20
15 (Right-rear)	RR +B: No. 5	RR-GND: No. 6
17 (Left-rear)	RL +B: No. 2	RL-GND: No. 3

VSA CONTROL UNIT 47P CONNECTOR

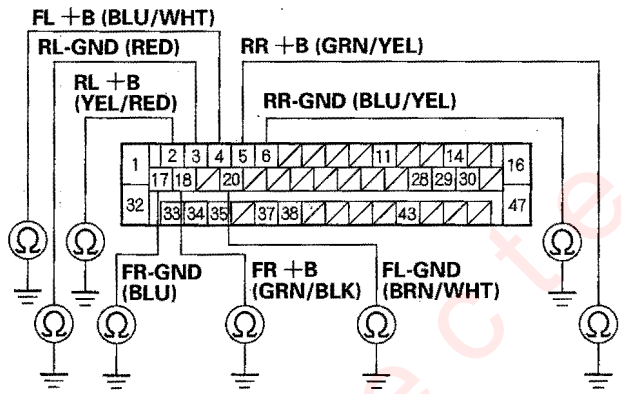

Wire side of female terminals

Is there continuity?

YES—Repair short to body ground in the wire between the VSA modulator-control unit and the wheel sensor.■

NO—Replace the appropriate wheel sensor (see page 19-99).■

12. Disconnect the appropriate wheel sensor 2P connector.

13. Check for continuity between the appropriate wheel sensor +B and GND terminals of the VSA control unit 47P connector (see table).

DTC	Appropriate Terminal	
	+B	GND
11 (Right-front)	FR +B: No. 18	FR-GND: No. 17
13 (Left-front)	FL +B: No. 4	FL-GND: No. 20
15 (Right-rear)	RR +B: No. 5	RR-GND: No. 6
17 (Left-rear)	RL +B: No. 2	RL-GND: No. 3

VSA CONTROL UNIT 47P CONNECTOR

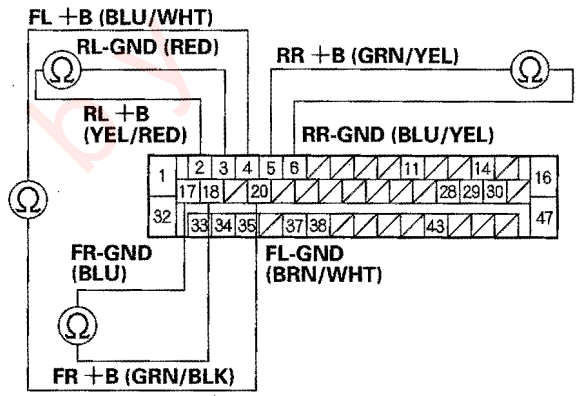

Wire side of female terminals

Is there continuity?

YES—Repair short in the wires between the VSA control unit and the wheel sensor.■

NO—Go to step 14.

Protected by AR

14. Substitute a known-good wheel sensor for the appropriate wheel sensor (see table).

DTC	Appropriate Wheel Sensor
11	Right-front
13	Left-front
15	Right-rear
17	Left-rear

15. Clear the DTCs using the HDS (see page 19-45).
16. Disconnect the HDS from the 16P DLC.
17. Turn the ignition switch ON (II), and then OFF.
18. Turn the ignition switch ON (II), then test-drive the vehicle at speeds above 19 mph (30 km/h).

    Does the ABS indicator come on?

    YES—Check for loose terminals in the VSA control unit 47P connector. If necessary, substitute a known-good VSA modulator-control unit, and recheck.■

    NO—Replace the original wheel sensor (see page 19-99).■

DTC 12, 14, 16, 18: Wheel Sensor (Electrical Noise/Intermittent Interruption)

NOTE: If the ABS indicator comes on because of electrical noise, the indicator goes off when you test-drive the vehicle at 19 mph (30 km/h).

1. Clear the DTC using the HDS (see page 19-45).
2. Disconnect the HDS from the 16P DLC.
3. Turn the ignition switch OFF, then turn it ON (II) again.
4. Test-drive the vehicle around a number of corners.
5. Check the appropriate wheel sensor and magnetic encoder or pulser for debris or damage (see page 19-98).

DTC	Appropriate Wheel Sensor
12	Right-front
14	Left-front
16	Right-rear
18	Left-rear

    Are they OK?

    YES—Go to step 6.

    NO—Clean and reinstall or replace the appropriate wheel sensor, magnetic encoder or pulser.■

6. Disconnect the VSA control unit 47P connector.

(cont'd)

Protected by AR

DTC Troubleshooting (cont'd)

7. Check for continuity between the appropriate wheel sensor +B terminal and other wheel sensor +B terminals of the VSA control unit 47P connector (see table).

DTC	Appropriate Terminal	Other Terminals		
12	FR +B: No. 18	No. 4	No. 5	No. 2
14	FL +B: No. 4	No. 18	No. 5	No. 2
16	RR +B: No. 5	No. 18	No. 4	No. 2
18	RL +B: No. 2	No. 18	No. 4	No. 5

VSA CONTROL UNIT 47P CONNECTOR

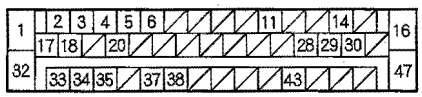

Wire side of female terminals

Is there continuity?

YES—Repair short in the wire between the appropriate wheel sensor and the other wheel sensor. ■

NO—Go to step 8.

8. Substitute a known-good wheel sensor for the appropriate wheel sensor (see table).

DTC	Appropriate Wheel Sensor
12	Right-front
14	Left-front
16	Right-rear
18	Left-rear

Does the ABS indicator come on?

YES—Check for loose terminals in the VSA control unit 47P connector. If necessary, substitute a known-good VSA modulator-control unit, and recheck. ■

NO—Replace the original wheel sensor or encoder (see page 19-99). ■

DTC 21, 22: Magnetic Encoder (front)

DTC 23, 24: Pulser (rear)

1. Clear the DTC using the HDS (see page 19-45).
2. Disconnect the HDS from the 16P DLC.
3. Cycle the igniton switch (turn ON (II), then OFF).
4. Test-drive the vehicle at 19 mph (30 km/h) or more.

   Does the ABS indicator come on, and are DTCs 21, 22, 23, and/or 24 indicated?

   YES—Go to step 5.

   NO—The system is OK at this time. ■

5. Check the appropriate magnetic encoder or pulser for debris or damage (see table) (see page 19-98).

DTC	Appropriate Encoder or Pulser
21	Right-front
22	Left-front
23	Right-rear
24	Left-rear

Is the encoder or pulser OK?

YES—Check for loose terminals in the VSA control unit 47P connector. If necessary, substitute a known-good VSA modulator-control unit, and recheck. ■

NO—Clean and reinstall or replace the magnetic encoder or pulser. ■

Protected by ARS

6. Clear the DTCs using the HDS (see page 19-45).
7. Disconnect the HDS from the 16P DLC.
8. Cycle the igniton switch OFF, ON (II), and OFF.
9. Test-drive the vehicle at speeds above 19 mph (30 km/h).

Does the ABS indicator come on?

YES—Check for a loose VSA control unit 47P connector. If necessary, substitute a known-good VSA modulator-control unit, and recheck.■

NO—Replace the original wheel sensor, encoder, or pulser (see page 19-99).■

DTC 25: Yaw Rate Sensor

1. Clear the DTC using the HDS (see page 19-45).
2. Disconnect the HDS from the 16P DLC.
3. Turn the ignition switch OFF, then turn it ON (II) again.
4. Test-drive the vehicle around a number of corners.
5. Verify the DTC.

Is DTC 27 or 64 indicated?

YES—Do the appropriate troubleshooting for the DTC.■

NO—Go to step 6.

6. Turn the ignition switch OFF.
7. Disconnect the VSA control unit 47P connector, steering angle sensor 5P connector and yaw rate-lateral acceleration sensor 5P connector.
8. Turn the ignition switch ON (II).
9. Measure the voltage between body ground and the VSA control unit 47P connector terminal No. 33, No. 34, and No. 35 individually.

VSA CONTROL UNIT 47P CONNECTOR

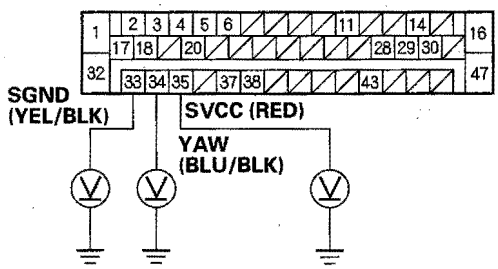

Wire side of female terminals

Is there 1 V or more?

YES—Repair short to power in the wire between the VSA control unit, the yaw rate-lateral acceleration sensor and the steering angle sensor.■

NO—Go to step 10.

(cont'd)

Protected by AR

DTC Troubleshooting (cont'd)

10. Turn the ignition switch OFF.

11. Check for continuity between body ground and the VSA control unit 47P connector terminal No. 33, No. 34, and No. 35 individually.

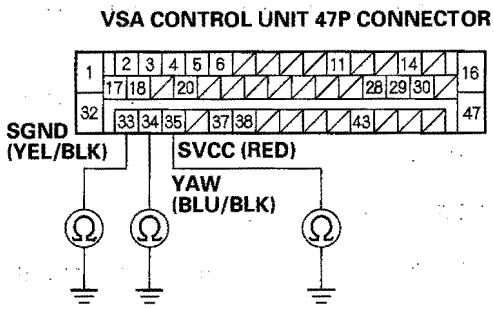

Wire side of female terminals

Is there continuity?

YES—Repair short to body ground in the wire between the VSA control unit, the yaw rate-lateral acceleration sensor and the steering angle sensor.■

NO—Go to step 12.

12. Check for continuity between the VSA control unit 47P connector terminal No. 35 and yaw rate-lateral acceleration sensor 5P connector terminal No. 2.

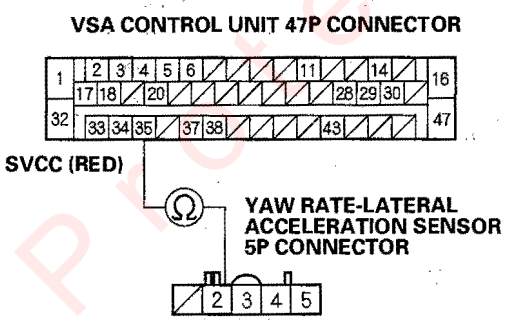

Wire side of female terminals

Is there continuity?

YES—Go to step 13.

NO—Repair open in the wire between the VSA control unit and the yaw rate-lateral acceleration sensor.■

13. Check for continuity between the VSA control unit 47P connector terminal No. 33 and yaw rate-lateral acceleration sensor 5P connector terminal No. 4.

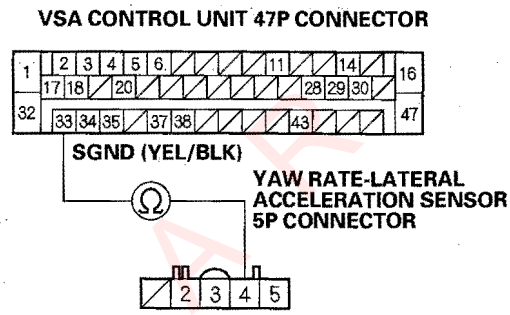

Wire side of female terminals

Is there continuity?

YES—Go to step 14.

NO—Repair open in the wire between the VSA control unit and the yaw rate-lateral acceleration sensor.■

14. Check for continuity between the VSA control unit 47P connector terminal No. 34 and yaw rate-lateral acceleration sensor 5P connector terminal No. 3.

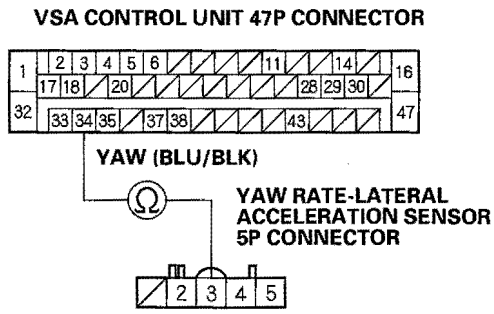

Wire side of female terminals

Is there continuity?

YES—Go to step 15.

NO—Repair open in the wire between the VSA control unit and the yaw rate-lateral acceleration sensor.■

Presented by AR

15. Substitute a known-good yaw rate-lateral acceleration sensor.
16. Reconnect all of the disconnected connectors.
17. Clear the DTC using the HDS (see page 19-45).
18. Disconnect the HDS from the 16P DLC.
19. Turn the ignition switch OFF, then turn it ON (II) again.
20. Test-drive the vehicle around a number of corners.
21. Verify the DTC.

    Is DTC 25 indicated?

    YES—Check for loose connector terminals and repair if necessary. Replace the VSA modulator-control unit (see page 19-96).■

    NO—Replace the original yaw rate-lateral acceleration sensor (see page 19-93).■

DTC 26: Lateral Acceleration Sensor

1. Clear the DTC using the HDS (see page 19-45).
2. Disconnect the HDS from the 16P DLC.
3. Turn the ignition switch OFF, then turn it ON (II) again.
4. Test-drive the vehicle around a number of corners.
5. Verify the DTC.

    Is DTC 64 indicated?

    YES—Do the appropriate troubleshooting for the DTC.■

    NO—Go to step 6.
6. Turn the ignition switch OFF.
7. Disconnect the VSA control unit 47P connector, steering angle sensor 5P connector and yaw rate-lateral acceleration sensor 5P connector.
8. Turn the ignition switch ON (II).
9. Measure the voltage between body ground and the VSA control unit 47P connector terminal No. 33, No. 35, and No. 37 individually.

VSA CONTROL UNIT 47P CONNECTOR

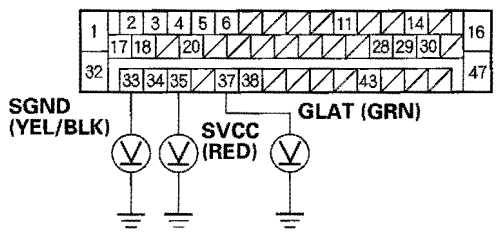

Wire side of female terminals

Is there 1 V or more?

YES—Repair short to power in the wire between the VSA control unit, the yaw rate-lateral acceleration sensor and the steering angle sensor.■

NO—Go to step 10.

(cont'd)

Protected by AR

DTC Troubleshooting (cont'd)

10. Turn the ignition switch OFF.

11. Check for continuity between body ground and the VSA control unit 47P connector terminal No. 33, No. 35, and No. 37 individually.

VSA CONTROL UNIT 47P CONNECTOR

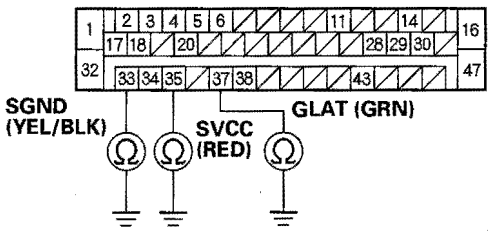

Wire side of female terminals

Is there continuity?

YES—Repair short to body ground in the wire between the VSA control unit, the yaw rate-lateral acceleration sensor and the steering angle sensor.■

NO—Go to step 12.

12. Check for continuity between the VSA control unit 47P connector terminal No. 35 and yaw rate-lateral acceleration sensor 5P connector terminal No. 2.

VSA CONTROL UNIT 47P CONNECTOR

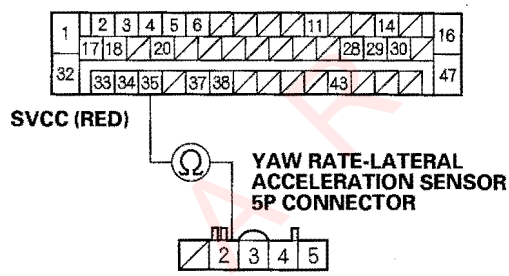

Wire side of female terminals

Is there continuity?

YES—Go to step 13.

NO—Repair open in the wire between the VSA control unit and the yaw rate-lateral acceleration sensor.■

13. Check for continuity between the VSA control unit 47P connector terminal No. 33 and yaw rate-lateral acceleration sensor 5P connector terminal No. 4.

VSA CONTROL UNIT 47P CONNECTOR

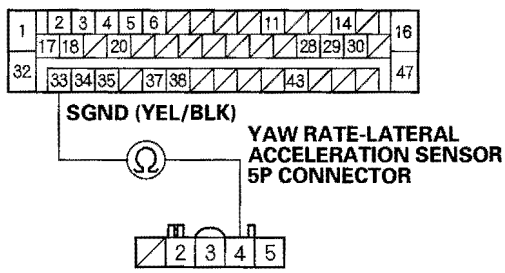

Wire side of female terminals

Is there continuity?

YES—Go to step 14.

NO—Repair open in the wire between the VSA control unit and the yaw rate-lateral acceleration sensor.■

Protected by ARS

14. Check for continuity between the VSA control unit 47P connector terminal No. 37 and yaw rate-lateral acceleration sensor 5P connector terminal No. 5.

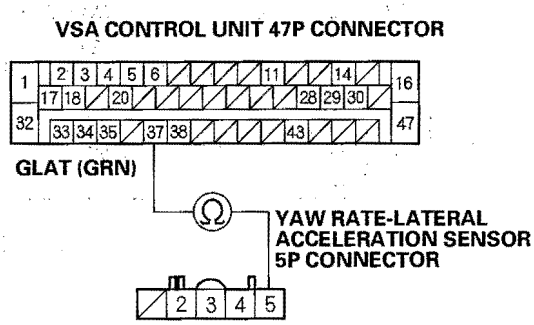

Is there continuity?

YES—Go to step 15.

NO—Repair open in the wire between the VSA control unit and the yaw rate-lateral acceleration sensor.■

15. Substitute a known-good yaw rate-lateral acceleration sensor.
16. Reconnect all of the disconnected connectors.
17. Clear the DTC using the HDS (see page 19-45).
18. Disconnect the HDS from the 16P DLC.
19. Turn the ignition switch OFF, then turn it ON (II) again.
20. Test-drive the vehicle around a number of corners.
21. Verify the DTC.

Is DTC 25 indicated?

YES—Check for loose terminals and repair if necessary. Replace the VSA modulator-control unit (see page 19-96).■

NO—Replace the original yaw rate-lateral acceleration sensor (see page 19-93).■

DTC 27: Steering Angle Sensor

1. Clear the DTC using the HDS (see page 19-45).
2. Disconnect the HDS from the 16P DLC.
3. Turn the ignition switch OFF, then turn it ON (II) again.
4. Test-drive the vehicle around a number of corners.
5. Verify the DTC.

Is DTC 64 indicated?

YES—Do the appropriate troubleshooting for the DTC.■

NO—Go to step 6.

6. Turn the ignition switch OFF.
7. Disconnect the VSA control unit 47P connector, steering angle sensor 5P connector and yaw rate-lateral acceleration sensor 5P connector.
8. Turn the ignition switch ON (II).
9. Measure the voltage between body ground and the VSA control unit 47P connector terminal No. 33, No. 35 individually.

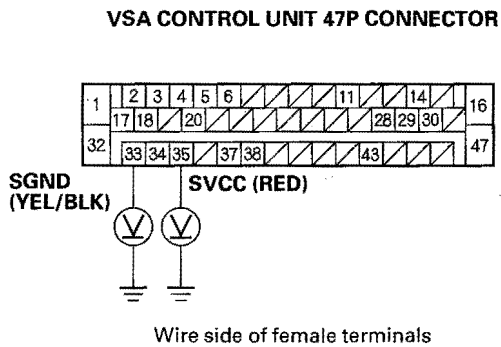

Is there 1 V or more?

YES—Repair short to power in the wire between the VSA control unit, the steering angle sensor and the yaw rate-lateral acceleration sensor.■

NO—Go to step 10.

(cont'd)

Protected by AR

DTC Troubleshooting (cont'd)

10. Measure the voltage between body ground and the VSA control unit 47P connector terminal No. 28, No. 29, and No. 43 individually.

VSA CONTROL UNIT 47P CONNECTOR

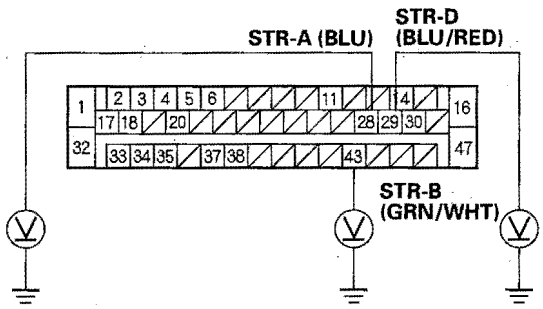

Wire side of female terminals

Is there 1 V or more?

YES—Repair short to power in the wire between the VSA control unit, the steering angle sensor and the yaw rate-lateral acceleration sensor. ■

NO—Go to step 11.

11. Turn the ignition switch OFF.

12. Check for continuity between body ground and the VSA control unit 47P connector terminal No. 33, No. 35 individually.

VSA CONTROL UNIT 47P CONNECTOR

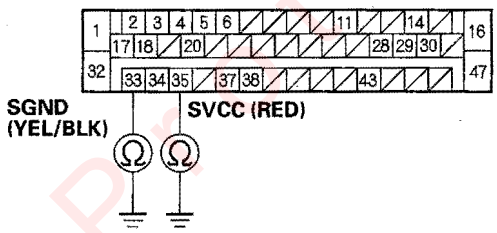

Wire side of female terminals

Is there continuity?

YES—Repair short to body ground in the wire between the VSA control unit, the steering angle sensor and the yaw rate-lateral acceleration sensor. ■

NO—Go to step 13.

13. Check for continuity between body ground and the VSA control unit 47P connector terminal No. 28, No. 29, and No. 43 individually.

VSA CONTROL UNIT 47P CONNECTOR

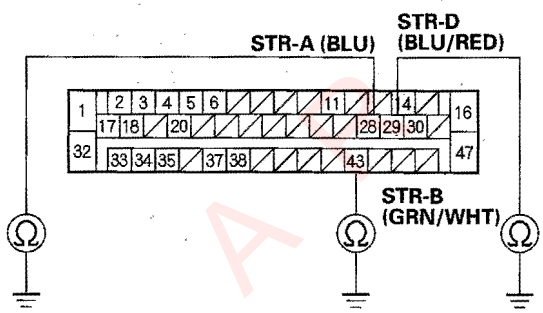

Wire side of female terminals

Is there continuity?

YES—Repair short to body ground in the wire between the VSA control unit, the steering angle sensor and the yaw rate-lateral acceleration sensor. ■

NO—Go to step 14.

14. Check for continuity between the VSA control unit 47P connector terminal No. 33, No. 35 and steering angle sensor 5P connector terminal No. 1, No. 5 individually.

VSA CONTROL UNIT 47P CONNECTOR

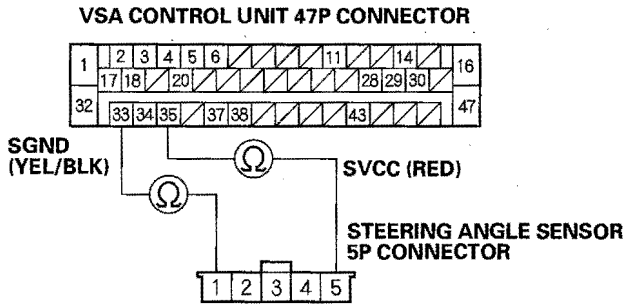

Wire side of female terminals

Is there continuity?

YES—Go to step 15.

NO—Repair open in the wire between the VSA control unit and the steering angle sensor. ■

Protected by A

15. Check for continuity between the VSA control unit 47P connector terminal No. 28, No. 29, No. 43 and steering angle sensor 5P connector terminal No. 2, No. 3, No. 4 individually.

VSA CONTROL UNIT 47P CONNECTOR

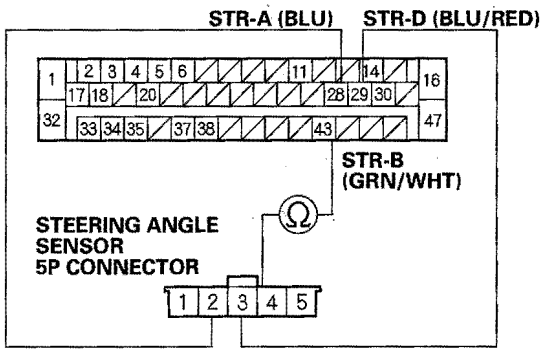

Wire side of female terminals

Is there continuity?

YES—Go to step 16.

NO—Repair open in the wire between the VSA control unit and the steering angle sensor. ■

16. Substitute a known-good steering angle sensor.
17. Reconnect all of the disconnected connectors.
18. Clear the DTC using the HDS (see page 19-45).
19. Disconnect the HDS from the 16P DLC.
20. Turn the ignition switch OFF, then turn it ON (II) again.
21. Test-drive the vehicle around a number of corners.
22. Verify the DTC.

Is DTC 27 indicated?

YES—Check for loose terminals and repair if necessary. Replace the VSA modulator-control unit (see page 19-96). ■

NO—Replace the original steering angle sensor (see page 19-92). ■

DTC 31, 32, 33, 34, 35, 36, 37, 38: ABS Solenoid

1. Clear the DTC using the HDS (see page 19-45).
2. Turn the ignition switch ON (II).
3. Verify the DTC.

Does the ABS indicator come on, and are DTCs 31, 32, 33, 34, 35, 36, 37, and/or 38 indicated?

YES—Check for loose terminals in the VSA control unit 47P connector. If necessary, substitute a known-good VSA modulator-control unit, and recheck. ■

NO—The system is OK at this time. ■

Protected by AR

DTC Troubleshooting (cont'd)

DTC 41, 42, 43, 44: Wheel Lock

1. Clear the DTC using the HDS (see page 19-45).
2. Disconnect the HDS from the 16P DLC.
3. Turn the ignition switch OFF, then turn it ON (II) again.
4. Test-drive the vehicle, and check for brake drag by duplicating city driving at speeds over 30 mph (50 km/h). Use the brakes often.

   Do the brakes drag?

   YES—Repair the brake drag. ■

   NO—Go to step 2.
5. Check the installation of the appropriate wheel sensor and the pulser or magnetic encoder for damage, debris, or excessive air gap (see page 19-98).

DTC	Appropriate Wheel Sensor
41	Right-front
42	Left-front
43	Right-rear
44	Left-rear

   Is it correct?

   YES—If the DTC does not reappear, the most probable cause for the DTC is that the vehicle might have lost traction in poor weather and spun around. ■

   NO—Reinstall or replace the wheel sensor (see page 19-99). ■

DTC 51: Motor Lock

DTC 52: Motor Stuck OFF

1. Clear the DTC using the HDS (see page 19-45).
2. Disconnect the HDS from the 16P DLC.
3. Turn the ignition switch OFF, then turn it ON (II) again.
4. Test-drive the vehicle around a number of corners.
5. Check the No. 17 (30A) fuse in the under-hood fuse/relay box.

   Is the fuse OK?

   YES—Reinstall the fuse, and go to step 6.

   NO—Replace the fuse, and recheck. ■
6. Disconnect the VSA control unit 47P connector.
7. Measure the voltage between the VSA control unit 47P connector terminal No. 16 and body ground.

VSA CONTROL UNIT 47P CONNECTOR

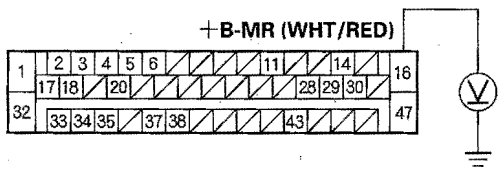

Wire side of female terminals

Is there battery voltage?

YES—Go to step 8.

NO—Repair open in the wire between the No. 17 (30A) fuse and the VSA modulator-control unit. ■

Protected by AR

8. Measure resistance between the VSA control unit 47P connector terminal No. 47 and body ground.

VSA CONTROL UNIT 47P CONNECTOR

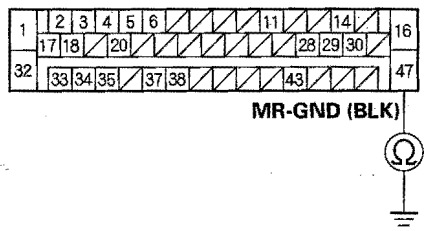

Wire side of female terminals

Is there less than 1 Ω ?

YES—Go to step 9.

NO—Repair open or high resistance in the wire between the VSA modulator-control unit and body ground (G203).■

9. Reconnect the VSA control unit 47P connector.
10. Clear the DTC using the DTC (see page 19-45).
11. Turn the ignition switch OFF, then turn it ON (II) again.
12. Test-drive the vehicle at 10 mph (15 km/h) or more.

Does the ABS indicator come on, and is DTC 51 or 52 indicated?

YES—Check for loose terminals and repair if necessary. Replace the VSA modulator-control unit (see page 19-96).■

NO—The system is OK at this time.■

DTC 53: Motor Stuck ON

1. Clear the DTC using the HDS (see page 19-45).
2. Disconnect the HDS from the 16P DLC.
3. Turn the ignition switch OFF, then turn it ON (II) again.
4. Test-drive the vehicle around a number of corners.
5. Disconnect the VSA control unit 47P connector.
6. Measure resistance between the VSA control unit 47P connector terminal No. 47 and body ground.

VSA CONTROL UNIT 47P CONNECTOR

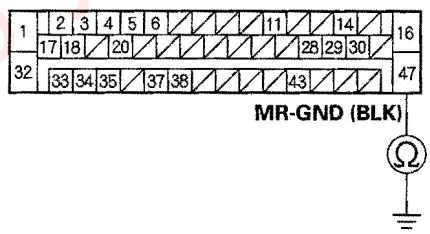

Wire side of female terminals

Is there less than 1 Ω ?

YES—Go to step 7.

NO—Repair open or high resistance in the wire between the VSA modulator-control unit and body ground (G203).■

7. Reconnect the VSA control unit 47P connector.

(cont'd)

Protected by AR

DTC Troubleshooting (cont'd)

8. Clear the DTC using the HDS (see page 19-45).
9. Turn the ignition switch OFF, then turn it ON (II) again.
10. Test-drive the vehicle.

    Does the ABS indicator come on, and is DTC 53 indicated?

    YES—Check for loose connector terminals and repair if necessary. Replace the VSA modulator-control unit (see page 19-96). ■

    NO—The system is OK at this time. ■

DTC 54: Fail-safe Relay

1. Clear the DTC using the HDS (see page 19-45).
2. Disconnect the HDS from the 16P DLC.
3. Turn the ignition switch OFF, then turn it ON (II) again.
4. Test-drive the vehicle around a number of corners.
5. Disconnect the VSA control unit 47P connector.
6. Measure resistance between the VSA control unit 47P connector terminal No. 47 and body ground.

VSA CONTROL UNIT 47P CONNECTOR

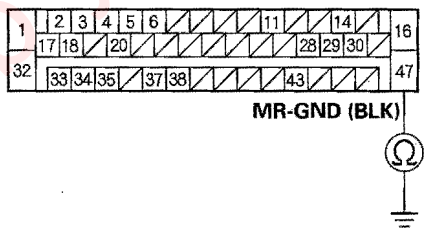

Wire side of female terminals

Is there less than 1 Ω ?

YES—Go to step 7.

NO—Repair open or high resistance in the wire between the VSA modulator-control unit and body ground (G203). ■

7. Reconnect the VSA control unit 47P connector.

Protected by AR

8. Clear the DTC using the HDS (see page 19-45).
9. Turn the ignition switch OFF, then turn it ON (II) again.
10. Test-drive the vehicle.

Does the ABS indicator come on, and is DTC 54 indicated?

YES—Check for loose connector terminals and repair if necessary. Replace the VSA modulator-control unit (see page 19-96).■

NO—The system is OK at this time.■

DTC 61, 62: High/Low Voltage

1. Clear the DTC using the HDS (see page 19-45).
2. Disconnect the HDS from the 16P DLC.
3. Turn the ignition switch OFF, then turn it ON (II) again.
4. Test-drive the vehicle around a number of corners.
5. Clear the DTC using the HDS (see page 19-45).
6. Turn the ignition switch ON (II).

Does the ABS indicator come on?

YES—Go to step 7.

NO—The system is OK at this time.■

7. Verify the DTC.

Is DTC 61 or 62 indicated?

YES—Check the battery (see page 22-74) and the charging system (see page 4-25).■

NO—Do the appropriate troubleshooting for the DTC indicated.■

Protected by AR

DTC Troubleshooting (cont'd)

DTC 64: Sensor Power Voltage

1. Clear the DTC using the HDS (see page 19-45).
2. Disconnect the HDS from the 16P DLC.
3. Turn the ignition switch OFF, then turn it ON (II) again.
4. Test-drive the vehicle around a number of corners.
5. Disconnect the VSA control unit 47P connector.
6. Start the engine.
7. Measure the voltage between the VSA control unit 47P connector terminal No. 35 and body ground.

VSA CONTROL UNIT 47P CONNECTOR

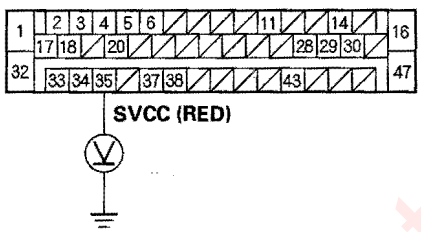

Wire side of female terminals

Is there 1 V or more?

YES—Repair short to power in the wire between the VSA modulator-control unit and yaw rate-lateral acceleration sensor and steering angle sensor. ■

NO—Go to step 8.

8. Check for continuity between the VSA control unit 47P connector terminal No. 35 and body ground.

VSA CONTROL UNIT 47P CONNECTOR

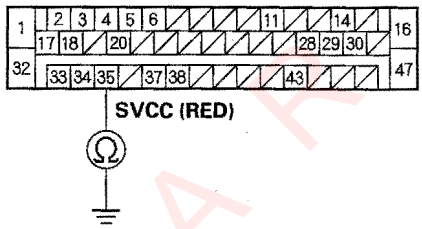

Wire side of female terminals

Is there continuity?

YES—Repair short to ground in the wire between the VSA modulator-control unit and yaw rate-lateral acceleration sensor and steering angle sensor. ■

NO—Go to step 9.

9. Clear the DTC using the HDS (see page 19-45).
10. Test-drive the vehicle.

Does the ABS indicator come on, and is DTC 64 indicated?

YES—Replace the VSA modulator-control unit (see page 19-96). ■

NO—Intermittent failure, the system is OK at this time. Check connections at the VSA control unit 47P connector and G203. ■

Protected by A R

DTC 65: Brake Fluid Level

1. Check the brake fluid level.

   Is the level correct?

   YES—Go to step 2.

   NO—Refill the brake fluid, and recheck.■

2. Disconnect the gauge assembly connector A (30P), and brake fluid level switch 2P connector.

3. Check for continuity between terminal No. 2 of the gauge assembly connector A (30P) and body ground.

VSA CONTROL UNIT 47P CONNECTOR

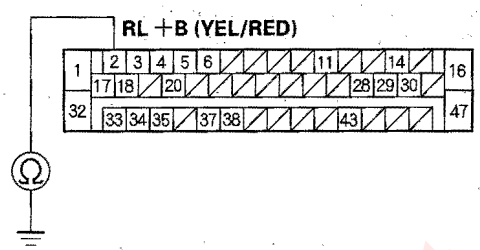

Wire side of female terminals

Is there continuity?

YES—Repair short to ground in the wire between the gauge assembly connector A and the brake fluid level switch.■

NO—Go to step 4.

4. Check the brake fluid level switch (see page 19-12).

   Is the switch OK?

   YES—Do the troubleshooting for the gauge control module (see page 22-262).■

   NO—Replace the brake fluid level switch.■

DTC 66: VSA Pressure Sensor (Inside of VSA Modulator-Control Unit)

1. Clear the DTC using the HDS (see page 19-45).

2. Remove the HDS from the 16P DLC.

3. Turn the ignition switch OFF, then turn it ON (II).

4. Test-drive the vehicle.

   Does the ABS indicator come on, and is DTC 25, 26, 27, or 64 indicated?

   YES—Do the appropriate troubleshooting for the DTC.

   NO—Go to step 5.

5. Do the VSA sensor neutral position memorization (see page 19-94).

6. Clear the DTC using the HDS (see page 19-45).

7. Disconnect the HDS from the 16P DLC.

8. Turn the ignition switch OFF, then turn it ON (II).

9. Test-drive the vehicle.

   Does the ABS indicator come on, and is DTC 66 indicated?

   YES—Check for loose connector terminals and repair if necessary. Replace the VSA modulator-control unit (see page 19-96).■

   NO—The system is OK at this time.■

Protected by AR

DTC Troubleshooting (cont'd)

DTC 68: Brake Pedal Position Switch

1. Check for other DTCs in the PGM-FI system.

   Are other DTCs indicated?

   YES—Do the appropriate troubleshooting for the DTCs.■

   NO—Go to step 2.

2. Check the brake pedal position switch (see page 19-12).

   Is the switch OK?

   YES—Go to step 3.

   NO—Adjust the brake pedal position switch (see page 19-6).■

3. Clear the DTC using the HDS (see page 19-45).

4. Disconnect the HDS from the 16P DLC.

5. Turn the ignition switch OFF, then turn it ON (II).

6. Test-drive the vehicle.

   Does the ABS indicator come on, and is DTC 68 indicated?

   YES—Go to step 7.

   NO—The system is OK at this time.■

7. Troubleshoot the brake pedal position switch circuit (see page 19-11).

   Is the brake pedal position switch circuit OK?

   YES—Substitute a known-good ECM/PCM and recheck.

   - If the problem is gone, replace the original ECM/PCM.■
   - If the problem continues, replace the VSA modulator-control unit (see page 19-96).■

   NO—Repair the brake pedal position switch circuit.■

DTC 71: Different Diameter Tire

1. Clear the DTC using the HDS (see page 19-45).

2. Disconnect the HDS from the 16P DLC.

3. Turn the ignition switch OFF, then turn it ON (II) again.

4. Test-drive the vehicle.

   Does the ABS indicator come on, and is DTC 71 indicated?

   YES—Go to step 5.

   NO—Intermittent failure; confirm that tire inflation is set to spec. The vehicle is OK at this time.■

5. Check that all four tires are the specified size and are inflated to the proper specification.

   Are all four tires the correct size and properly inflated?

   YES—Go to step 6.

   NO—Install the correct tires or set the tires to the correct inflation, and retest.■

6. With the vehicle on level ground, mark each tire with a small spot of grease. Roll the vehicle until each of the tires makes two grease spots on the floor.

7. Measure and record the distance between the two grease spots.

   Is the difference between the shortest and the longest measurement more than 10 %?

   YES—Replace the tire/tires that is smaller or larger than the others.■

   NO—Replace the VSA modulator-control unit (see page 19-96).■

Protected by AR

DTC 81: Central Processing Unit (CPU)

1. Check for other DTCs.

   Is another DTC indicated?

   YES—Do the appropriate troubleshooting for the DTC. ■

   NO—Go to step 2

2. Clear the DTC using the HDS (see page 19-45).
3. Disconnect the HDS from the 16P DLC.
4. Turn the ignition switch OFF, then turn it ON (II) again.
5. Test-drive the vehicle.

   Does the ABS indicator come on, and is DTC 81 indicated?

   YES—Go to step 6.

   NO—Intermittent failure; the vehicle is OK at this time. ■

6. Disconnect the VSA control unit 47P connector.
7. Start the engine.
8. Measure the voltage between the VSA control unit 47P connector terminal No. 35 and body ground.

VSA CONTROL UNIT 47P CONNECTOR

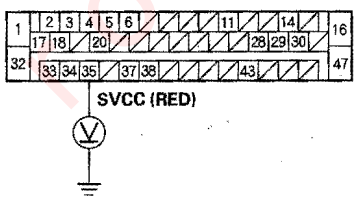

Wire side of female terminals

Is there 1 V or more?

YES—Repair short to power in the wire between the VSA modulator-control unit, the yaw rate-lateral acceleration sensor, and the steering angle sensor. ■

NO—Go to step 9.

9. Check for continuity between the VSA control unit 47P connector terminal No. 35 and body ground.

VSA CONTROL UNIT 47P CONNECTOR

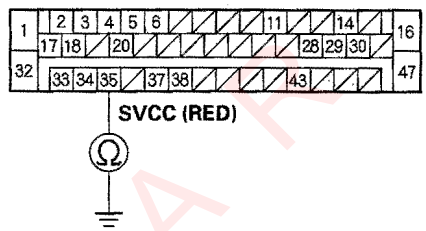

Wire side of female terminals

Is there continuity?

YES—Repair short to body ground in the wire between the VSA modulator-control unit, the yaw rate-lateral acceleration sensor, and the steering angle sensor. ■

NO—Check for loose terminals in the VSA control unit 47P connector. If necessary, substitute a known-good VSA modulator-control unit, and recheck (see page 19-96). ■

Protected by ARS

DTC Troubleshooting (cont'd)

DTC 83: ECM/PCM

1. Check the DTC.

   Is DTC 86 indicated?

   YES—Do the troubleshooting for DTC 86 (see page 19-83). ■

   NO—Go to step 2.

2. Clear the DTC using the HDS (see page 19-45).
3. Disconnect the HDS from the 16P DLC.
4. Turn the ignition switch OFF, then turn it ON (II).
5. Test-drive the vehicle.

   Do the VSA and VSA activation indicators come on, and is DTC 83 indicated?

   YES—Go to step 6.

   NO—The system is OK at this time. ■

6. Check the PGM-FI system.

   Does the MIL indicator come on or is ECM/PCM's DTC indicated?

   YES—Do the applicable troubleshooting for ECM/PCM. ■

   NO—Go to step 7.

7. Check the gear position.

   Does the D indicator come on while neutral position (N) is selected or is ECM/PCM's DTC indicated?

   YES—Do the applicable troubleshooting for ECM/PCM. ■

   NO—Check for loose terminals at the ECM/PCM connectors, and go to step 8.

8. Clear the DTC using the HDS (see page 19-45).
9. Turn the ignition switch OFF, then turn it ON (II).
10. Test-drive the vehicle.

    Is DTC 83 indicated and no ECM/PCM's DTC?

    YES—Substitute a known-good PCM, and recheck. If the code returns, replace the VSA modulator-control unit (see page 19-96). ■

    NO—The system is OK at this time. ■

DTC 84: VSA Sensor Neutral Position

1. Clear the DTC using the HDS (see page 19-45).
2. Disconnect the HDS from the 16P DLC.
3. Turn the ignition switch OFF, then turn it ON (II) again.
4. Test-drive the vehicle.

   Does the VSA indicator come on, and is DTC 84 indicated?

   YES—Go to step 5.

   NO—The system is OK at this time. ■

5. Check for other DTCs.

   Are any other DTCs indicated?

   YES—Troubleshoot the appropriate DTC. ■

   NO—Go to step 6.

6. Do the VSA sensor neutral position memorization (see page 19-94).
7. Clear the DTC using the HDS (see page 19-45).
8. Disconnect the HDS from the 16P DLC.
9. Turn the ignition switch OFF, then turn it ON (II) again.
10. Test-drive the vehicle.

    Does the VSA indicator come on, and is DTC 84 indicated?

    YES—Replace the VSA modulator-control unit (see page 19-96). ■

    NO—The system is OK at this time. ■

Protected by AR

DTC 86: F-CAN Communication

1. Clear the DTC using the HDS (see page 19-45).
2. Start and run the engine for at least 5 seconds then turn the engine off.
3. Check for DTCs using the HDS.

   Is DTC 86 indicated?

   YES—Go to step 4.

   NO—Intermittent failure, the F-CAN communication line is OK at this time. ■
4. Check for DTCs in the ECM/PCM.

   Are any DTCs indicated?

   YES—Troubleshoot the ECM/PCM DTCs. ■

   NO—Replace the VSA modulator-control unit (see page 19-96). ■

DTC 107: TCS Operation

DTC 108: VSA Operation

NOTE: The ABS/VSA indicators do not come on by memorizing the DTC 107 or 108.

1. Clear the DTC using the HDS (see page 19-45).
2. Disconnect the HDS from the 16P DLC.
3. Turn the ignition switch OFF, then turn it ON (II) again.
4. Test-drive the vehicle.

   Is DTC 107 or DTC 108 indicated ?

   YES—Check for loose terminals in the VSA control unit 47P connector. If necessary, substitute a known-good VSA modulator-control unit (see page 19-96), and recheck. ■

   NO—Intermittent failure; the system is OK at this time. ■

Protected by AR

DTC Troubleshooting (cont'd)

DTC 112: Internal Power Source Stuck OFF

NOTE: If the battery cable was disconnected three times with the ignition switch ON (II), this DTC may be stored.

1. Check for other DTCs.

   Is another DTC indicated?

   YES—Do the appropriate troubleshooting for the DTC.■

   NO—Go to step 2.

2. Clear the DTC using the HDS (see page 19-45).

3. Disconnect the HDS from the 16P DLC.

4. Test-drive the vehicle.

   Does the ABS indicator come on, and is DTC 112 indicated?

   YES—Go to step 5.

   NO—Intermittent failure; the vehicle is OK at this time.■

5. Inspect G203 for a clean and tight connection.

   Is G203 clean and properly connected?

   YES—Go to step 6.

   NO—Repair the connection at G203.■

6. Disconnect the VSA control unit 47P connector.

7. Check for continuity between body ground and VSA control unit 47P connector terminals No. 32 and No. 47 individually.

VSA CONTROL UNIT 47P CONNECTOR

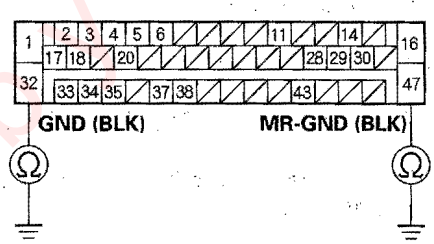

Wire side of female terminals

Is there continuity?

YES—Check for loose terminals in the VSA control unit 47P connector. If necessary, substitute a known-good VSA modulator-control unit (see page 19-96), and recheck.■

NO—Intermittent failure; the vehicle is OK at this time.■

Protected by AR

Symptom Troubleshooting

DTC 121, 122, 123, 124: VSA Solenoid

1. Clear the DTC using the HDS (see page 19-45).
2. Disconnect the HDS from the 16P DLC.
3. Turn the ignition switch OFF, then turn it ON (II) again.
4. Test-drive the vehicle.

   Does the VSA indicator come on, and is DTC 121, 122, 123, or 124 indicated?

   YES—Check for loose terminals in the VSA control unit 47P connector. If necessary, substitute a known-good VSA modulator-control unit (see page 19-96), and recheck.■

   NO—Intermittent failure; the system is OK at this time.■

ABS indicator does not come on

1. Turn the ignition switch ON (II), and watch the ABS indicator.

   Does the ABS indicator come on for several seconds?

   YES—The system is OK at this time.■

   NO—Go to step 2.
2. Apply the parking brake.

   Does the brake system indicator come?

   YES—Go to step 3.

   NO—Repair open in the gauge control module indicator power source circuit.■
3. Turn the ignition switch OFF.
4. Disconnect the VSA control unit 47P connector.
5. Turn the ignition switch ON (II).

   Does the VSA indicator come on?

   YES—Go to step 6.

   NO—Do the troubleshooting for the gauge control module (see page 22-262).■
6. Turn the ignition switch OFF.
7. Substitute a known-good VSA modulator-control unit (see page 19-96).
8. Turn the ignition switch ON (II).

   Does ABS indicator come on?

   YES—Replace the VSA modulator-control unit (see page 19-96).■

   NO—Do the troubleshooting for the gauge control module (see page 22-262).■

Protected by A R

Symptom Troubleshooting (cont'd)

ABS indicator does not go off, and no DTCs are stored

1. Check the No. 18 (40A) fuse in the under-hood fuse/relay box.

   Is the fuse OK?

   YES—Reinstall the fuse, and go to step 2.

   NO—Replace the fuse, and recheck. If the fuse is blown, check for a short to body ground in this fuse circuit. If the circuit is OK, replace the VSA modulator-control unit (see page 19-96).■

2. Check the No. 18 (15A) fuse in the under-dash fuse/relay box.

   Is the fuse OK?

   YES—Reinstall the fuse, and go to step 3.

   NO—Replace the fuse, and recheck. If the fuse is blown, check for a short to body ground in this fuse circuit. If the circuit is OK, replace the VSA modulator-control unit (see page 19-96).■

3. Turn the ignition switch OFF.

4. Disconnect the VSA control unit 47P conector.

5. Measure the voltage between the VSA control unit 47P connector terminal No. 1 and body ground.

VSA CONTROL UNIT 47P CONNECTOR

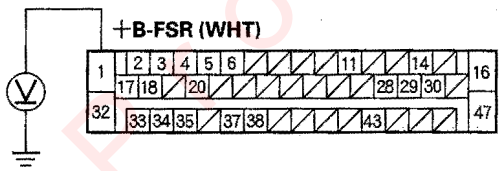

Wire side of female terminals

Is there battery voltage?

YES—Go to step 6.

NO—Repair open in the wire between the No. 18 (40A) fuse and the VSA control unit.■

6. Turn the ignition switch ON (II).

7. Measure the voltage between the VSA control unit 47P connector terminal No. 38 and body ground.

VSA CONTROL UNIT 47P CONNECTOR

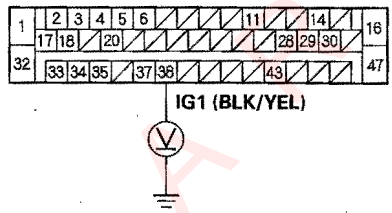

Wire side of female terminals

Is there battery voltage?

YES—Go to step 8.

NO—Repair open in the wire between the No. 18 (15A) fuse and the VSA control unit.■

8. Turn the ignition switch OFF.

9. Check for continuity between the VSA control unit 47P connector terminal No. 32 and body ground.

VSA CONTROL UNIT 47P CONNECTOR

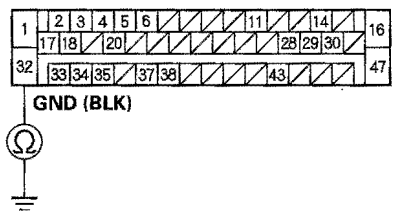

Wire side of female terminals

Is there continuity?

YES—Check for loose terminals in the VSA control unit 47P connector. Substitute a known-good gauge control module, and recheck. If the test results are the same, substitute a known-good VSA modulator-control unit (see page 19-96), and recheck.■

NO—Repair open in the wire between the VSA control unit and body ground (G203).■

Protected by A

Brake system indicator does not come on (Check bulb operation with parking brake)

1. With the parking brake applied, turn the ignition switch ON (II), and watch the brake system indicator.

   Does the brake system indicator come on?

   YES – Go to step 3.

   NO – Go to step 2.

2. Turn the ignition switch OFF then ON (II) again.

   Does the ABS indicator come on for several seconds?

   YES – Replace the gauge control module (see page 22-265). ■

   NO – Repair open in the indicator power source circuit, If necessary, substitute a known-good gauge control module, and recheck. ■

3. Turn the ignition switch OFF.

4. Release the parking brake.

5. Turn the ignition switch ON (II).

   Does the brake system indicator come on for several seconds?

   YES – Go to step 6.

   NO – Check for loose terminals in the gauge control module connectors. If necessary, substitute a known-good gauge control module, and recheck. ■

6. Apply the parking brake.

   Does the brake system indicator come on?

   YES – The system is OK at this time. ■

   NO – Go to step 7.

7. Turn the ignition switch OFF.

8. Disconnect the parking brake switch connector (see page 19-12).

9. Turn the ignition switch ON (II).

10. Measure the voltage between the parking brake switch connector terminal and body ground.

    Is there battery voltage?

    YES – Replace the parking brake switch (see page 19-12). ■

    NO – Go to step 11.

11. Turn the ignition switch OFF.

12. Remove the gauge control module (see page 22-265).

13. Connect gauge control module connector A (30P) terminal No. 3 and body ground with a jumper wire.

GAUGE CONTROL MODULE CONNECTOR A (30P)

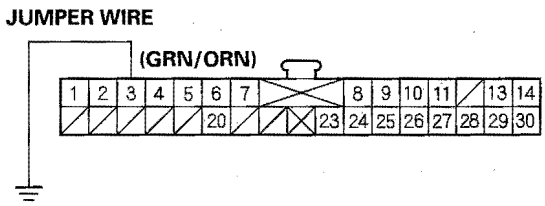

Wire side of female terminals

14. Turn the ignition switch ON (II).

    Does the brake system indicator come on and stay on?

    YES – Repair open in the wire between the gauge control module, and the parking brake switch. ■

    NO – Replace the gauge control module (see page 22-265). ■

Protected by AR

Symptom Troubleshooting (cont'd)

Brake system indicator does not go off

1. Turn the ignition switch ON (II).
2. Release the parking brake.

   Does the brake system indicator go off after several seconds?

   YES—The system is OK at this time.■

   NO—Go to step 3.
3. Check the brake fluid level (see page 19-12).

   Is the level OK?

   YES—Go to step 4.

   NO—Refill the brake fluid, and recheck.■
4. Check the ABS indicator.

   Does the ABS indicator stay on?

   YES—Read the DTC (see page 19-45), and do the applicable troubleshooting for the DTC.■

   NO—Check the brake system indicator circuit:

   - Short to body ground between the gauge control module and the parking brake switch.■
   - Short to body ground between the gauge control module and the brake fluid level switch.■
   - Parking brake switch stuck ON.■
   - Brake fluid level switch stuck ON.■
   - Faulty gauge control module.■

VSA indicator does not come on

1. Turn the ignition switch ON (II), and watch the VSA indicator.

   Does the VSA indicator come on for several seconds?

   YES—The system is OK at this time.■

   NO—Go to step 2.
2. Apply the parking brake.

   Does the brake system indicator come on?

   YES—Go to step 3.

   NO—Repair open in the indicator power source circuit.■
3. Turn the ignition switch OFF.
4. Disconnect the VSA control unit 47P connector.
5. Turn the ignition switch ON (II).

   Does the VSA indicator come on?

   YES—Go to step 6.

   NO—Do the troubleshooting for the gauge control module (see page 22-262).■
6. Turn the ignition switch OFF.
7. Substitute a known-good VSA modulator-control unit (see page 19-96).
8. Turn the ignition switch ON (II).

   Does the VSA indicator come on?

   YES—Replace the VSA modulator-control unit (see page 19-96).■

   NO—Do the troubleshooting for the gauge control module (see page 22-262).■

Protected by A R

VSA indicator does not go off, and no DTCs are stored

1. Check the No. 18 (40A) fuse in the under-hood fuse/relay box.

   Is the fuse OK?

   YES—Reinstall the fuse, and go to step 2.

   NO—Replace the fuse, and recheck. If the fuse is blown, check for a short to body ground in this fuse circuit. If the circuit is OK, replace the VSA modulator-control unit (see page 19-96).■

2. Check the No. 18 (15A) fuse in the under-dash fuse/relay box.

   Is the fuse OK?

   YES—Reinstall the fuse, and go to step 3.

   NO—Replace the fuse, and recheck. If the fuse is blown, check for a short to body ground in this fuse circuit. If the circuit is OK, replace the VSA modulator-control unit (see page 19-96).■

3. Turn the ignition switch OFF.

4. Disconnect the VSA control unit 47P connector.

5. Measure the voltage between the VSA control unit 47P connector terminal No. 1 and body ground.

VSA CONTROL UNIT 47P CONNECTOR

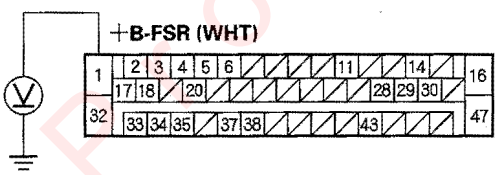

Wire side of female terminals

Is there battery voltage?

YES—Go to step 6.

NO—Repair open in the wire between the No. 18 (40A) fuse and the VSA control unit.■

6. Turn the ignition switch ON (II).

7. Measure the voltage between the VSA control unit 47P connector terminal No. 38 and body ground.

VSA CONTROL UNIT 47P CONNECTOR

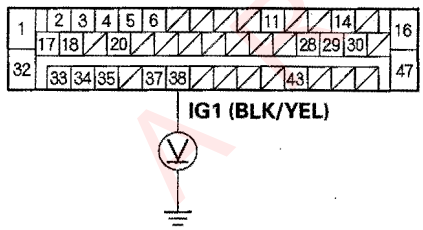

Wire side of female terminals

Is there battery voltage?

YES—Go to step 8.

NO—Repair open in the wire between the No. 18 (15A) fuse and the VSA control unit.■

8. Turn the ignition switch OFF.

9. Check for continuity between the VSA control unit 47P connector terminal No. 32 and body ground.

VSA CONTROL UNIT 47P CONNECTOR

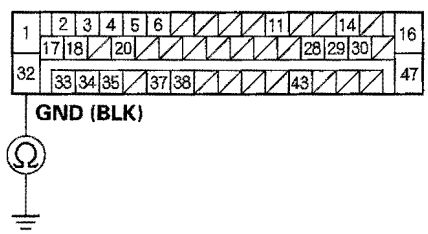

Wire side of female terminals

Is there continuity?

YES—Check for loose terminals in the VSA control unit 47P connector. Substitute a known-good gauge control module, and recheck. If the test results are the same, substitute a known-good VSA modulator-control unit and recheck.■

NO—Repair open in the wire between the VSA control unit and body ground (G203).■

Protected by AP

Symptom Troubleshooting (cont'd)

VSA activation indicator does not come on

1. Turn the ignition switch ON (II), and watch the VSA activation indicator.

   Does the VSA activation indicator come on for several seconds?

   YES—The system is OK at this time.■

   NO—Go to step 2.

2. Apply the parking brake.

   Does the brake system indicator come on?

   YES—Go to step 3.

   NO—Repair open in the gauge control module indicator power source circuit.■

3. Turn the ignition switch OFF.

4. Substitute a known-good VSA modulator-control unit (see page 19-96).

5. Turn the ignition switch ON (II).

   Does the VSA activation indicator come on?

   YES—Replace the VSA modulator-control unit (see page 19-96).■

   NO—Do the troubleshooting for the gauge control module (see page 22-262).■

VSA activation indicator does not go off, and no DTCs are stored

1. Turn the ignition switch ON (II), and watch the VSA indicator.

   Does the VSA indicator go off?

   YES—Go to step 2.

   NO—Do the appropriate troubleshooting for the VSA indicator.■

2. Turn the ignition switch OFF.

3. Check the VSA OFF switch (see page 19-95).

   Is the switch OK?

   YES—Go to step 4.

   NO—Replace the VSA OFF switch (see page 19-95).■

4. Clear the DTC using the HDS (see page 19-45).

   Does the VSA activation indicator go off?

   YES—The system is OK at this time.■

   NO—Go to step 5.

5. Do the VSA sensor neutral memorization (see page 19-94).

6. Clear the DTC using the HDS (see page 19-45).

7. Disconnect the HDS from the 16P DLC.

8. Check the VSA activation indicator.

   Does the VSA activation indicator go off?

   YES—The system is OK at this time.■

   NO—Go to step 9.

9. Remove the gauge control module (see page 22-265).

Protected by AR

10. Check for continuity between the VSA OFF switch 5P connector terminal No. 1 and body ground.

VSA OFF SWITCH 5P CONNECTOR

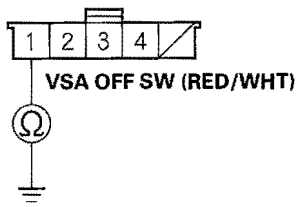

Wire side of female terminals

Is there continuity?

YES—Repair short to body ground in the wire between the gauge control module and the VSA OFF switch.■

NO—Go to step 11.

11. Check for continuity between the VSA OFF switch 5P connector terminal No. 2 and body ground.

VSA OFF SWITCH 5P CONNECTOR

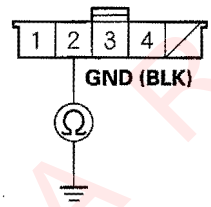

Wire side of female terminals

Is there continuity?

YES—Go to step 12.

NO—Repair open in the wire between the VSA OFF switch and body ground (G501).■

12. Substitute a known-good VSA modulator-control unit (see page 19-96).

13. Reconnect all of the disconnected connectors.

14. Clear the DTC using the HDS (see page 19-45).

15. Test-drive the vehicle.

Does the VSA activation indicator go off?

YES—Replace the VSA modulator-control unit (see page 19-96).■

NO—Check for loose terminals in the gauge control module connectors. If necessary, substitute a known-good gauge control module, and recheck.■

Protected by AR

Steering Angle Sensor Replacement

NOTE: Do not damage or drop the combination switch as the steering angle sensor is sensitive to shock and vibration.

1. Remove the steering wheel (see page 17-21), and steering column cover (see page 17-24).
2. Remove the combination switch assembly (see page 17-25).
3. Remove the combination light switch (A) and the wiper/washer switch (B).

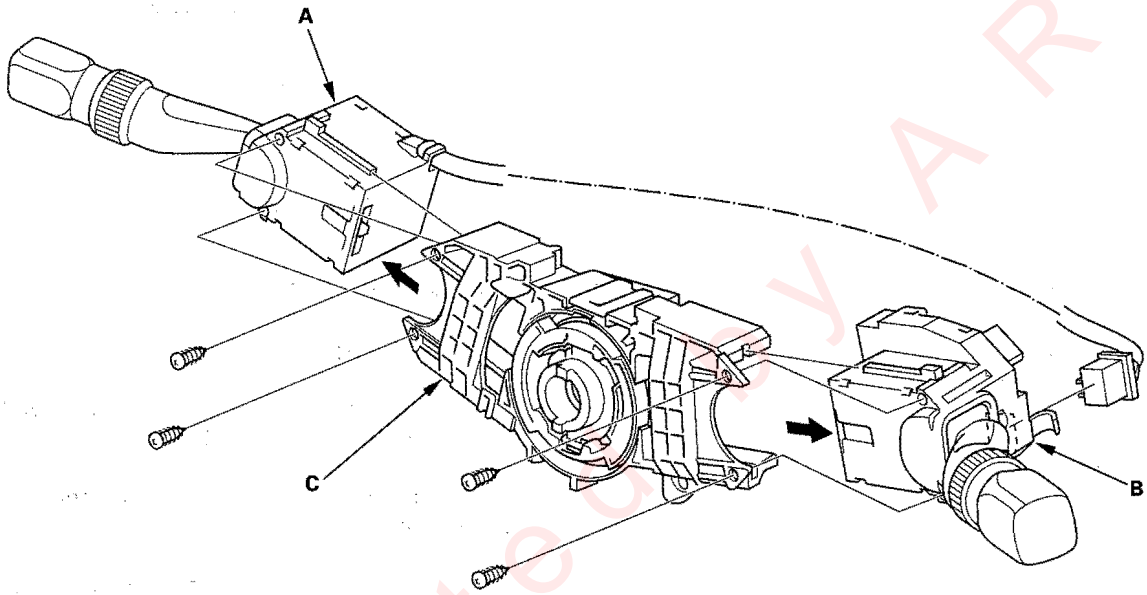

4. Replace the combination switch body complete (C).
5. Install the combination switch in the reverse order of removal.

   NOTE: Do not remove the steering angle sensor from the combination switch body.

6. Do the VSA sensor neutral position memorization (see page 19-94).

Protected by A R

Yaw Rate-Lateral Acceleration Sensor Replacement

NOTE:
- Do not damage or drop the sensor as it is sensitive.
- Do not use an impact wrench.

1. Remove the console cover (see page 20-78).
2. Disconnect the connector (A).

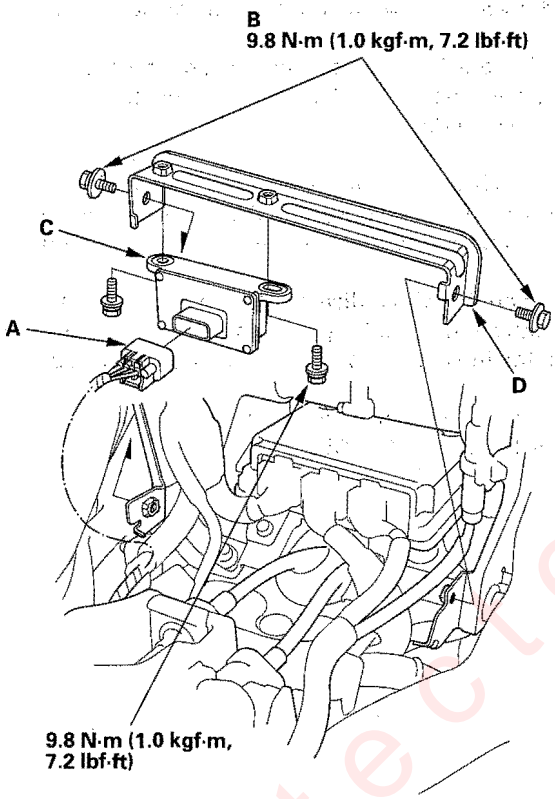

3. Remove the sensor bracket mounting bolts (B).
4. Remove the yaw rate-lateral acceleration sensor (C) with the bracket (D).
5. Remove the sensor from the bracket.
6. Install the sensor in the reverse order of removal.

Protected by AR

VSA Sensor Neutral Position Memorization

NOTE: Do not press the brake pedal during this procedure.

1. Park the vehicle on a flat and level surface.
2. With the ignition switch OFF, connect the HDS to the 16P date link connector (DLC) (A) under the driver's side of the dashboard.

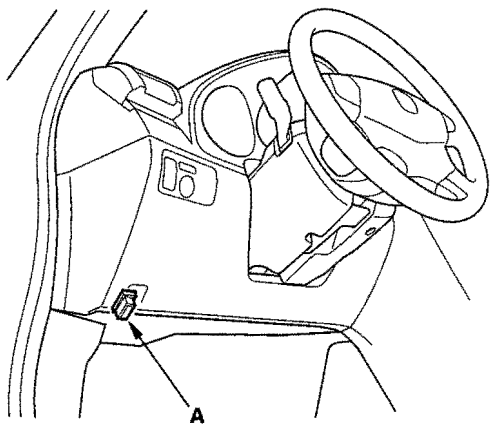

3. Short the SCS circuit using the HDS.
4. Turn the ignition switch ON (II) with the brake pedal position switch released.
5. The ABS indicator comes on for 2 seconds and goes off.
6. After the ABS indicator goes off, press and release the VSA OFF switch once within 0.5 seconds.
7. After the ABS indicator comes on, press and release the VSA OFF switch once within 0.5 seconds.
8. The VSA activation indicator blinks two times and goes off in 1 second, then the system completes the VSA sensor neutral position memorization.
9. When the ABS indicator, VSA indicator and VSA activation indicator go off, the memorizing is done. If the indicators do not go off, retry these steps.
10. Turn the ignition switch OFF, and disconnect the HDS from the 16P DLC.

Protected by AR

VSA Off Switch Test

1. Remove the driver's dashboard lower cover.
2. Remove the VSA OFF switch (A) from the switch panel.

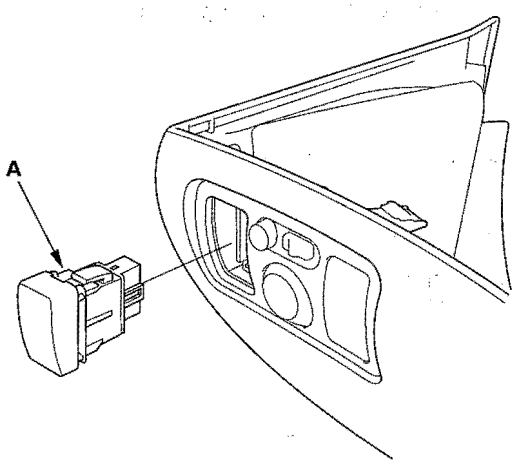

3. Disconnect the VSA OFF switch 5P connector.
4. Check for continuity between the VSA OFF switch 5P connector terminal No. 1 and No. 2. There should be continuity when the switch is pressed, and no continuity when the switch is released.

VSA OFF SWITCH 5P CONNECTOR

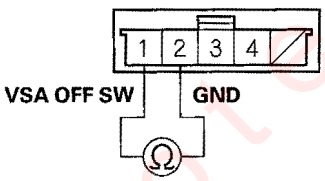

Terminal side of male terminals

5. Check for continuity between the VSA OFF switch 5P connector terminal No. 3 and No. 4. There should be continuity at all times.

VSA OFF SWITCH 5P CONNECTOR

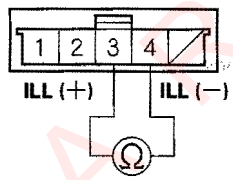

Terminal side of male terminals

Protected by AR

VSA Modulator-Control Unit Removal and Installation

NOTE:
- Do not spill brake fluid on the vehicle; it may damage the paint; if brake fluid gets on the paint, wash it off immediately with water.
- Be careful not to damage or deform the brake lines during removal and installation.
- To prevent the brake fluid from flowing, plug and cover the hose ends and joints with a shop towel or equivalent material.

Removal

1. Pull up the lock (A) of the VSA control unit 47P connector (B), and the connector disconnects itself.

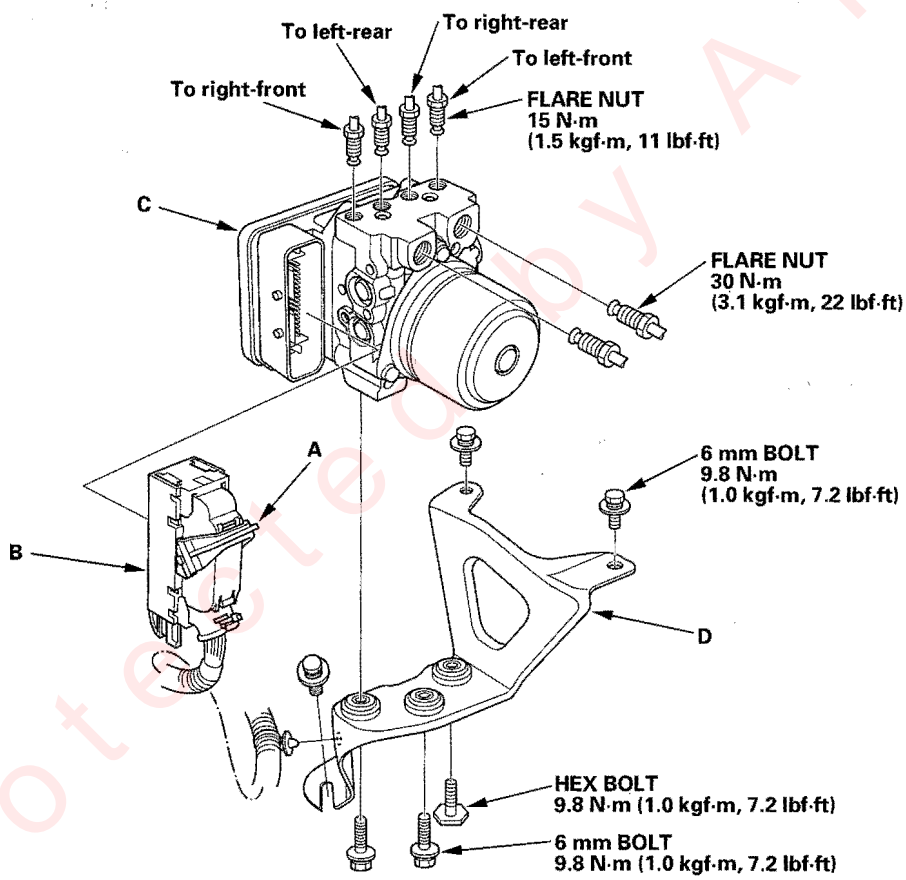

2. Disconnect the six brake lines from the VSA modulator-control unit (C).
3. Remove the three 6 mm bolts, then remove the VSA modulator-control unit with bracket (D) from the body.
4. Remove the two 6 mm bolts and the hex bolt, then remove the VSA modulator-control unit from the bracket.

Protected by AR

Installation

1. Install the VSA modulator-control unit on the bracket, then tighten the two 6 mm bolts and the hex bolt.
2. Install the VSA modulator-control unit/bracket on the body, then tighten the three 6 mm bolts.
3. Reconnect the six brake lines, then tighten the nuts.
4. Align the connecting surface of the VSA control unit 47P connector.
5. Carefully push in the lock of the VSA control unit 47P connector until you hear it click into place, then confirm the connector is fully seated.
6. Bleed the brake system, starting with the front wheels (see page 19-9).
7. Do VSA sensor neutral position memorization (see page 19-94).
8. Start the engine, and check that the ABS and VSA indicators go off.
9. Test-drive the vehicle, and check that the ABS and VSA indicators do not come on.

Protected by AR

Wheel Sensor Inspection

1. Clean the encoder, and make sure no metal or other debris is stuck to the encoder surface.
2. Check the magnetic encoder (A) and pulser (B) for damage. If cracked or damaged, replace the encoder or pulser.

Front

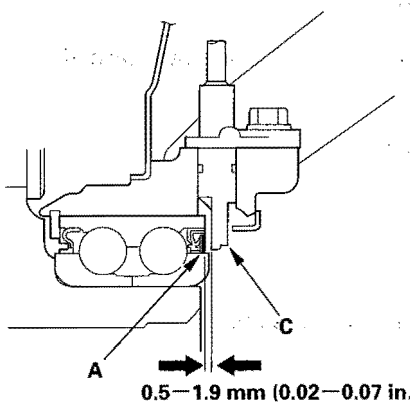

Rear

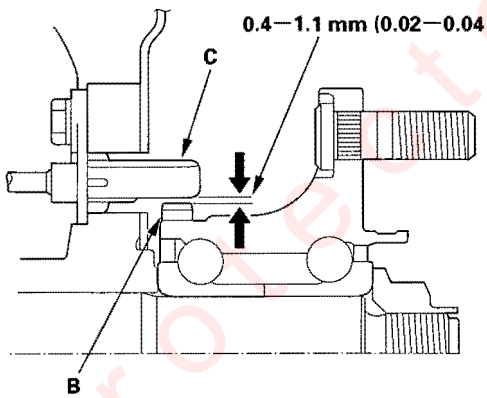

3. Measure the air gap between the wheel sensor (C) and the magnetic encoder or pulser all the way around while rotating the encoder.

Standard:
Front: 0.5—1.2 mm (0.02—0.05 in.)
Rear: 0.4—1.1 mm (0.02—0.04 in.)

Protected by AR

Wheel Sensor Replacement

NOTE: Install the sensor carefully to avoid twisting the wires.

Front

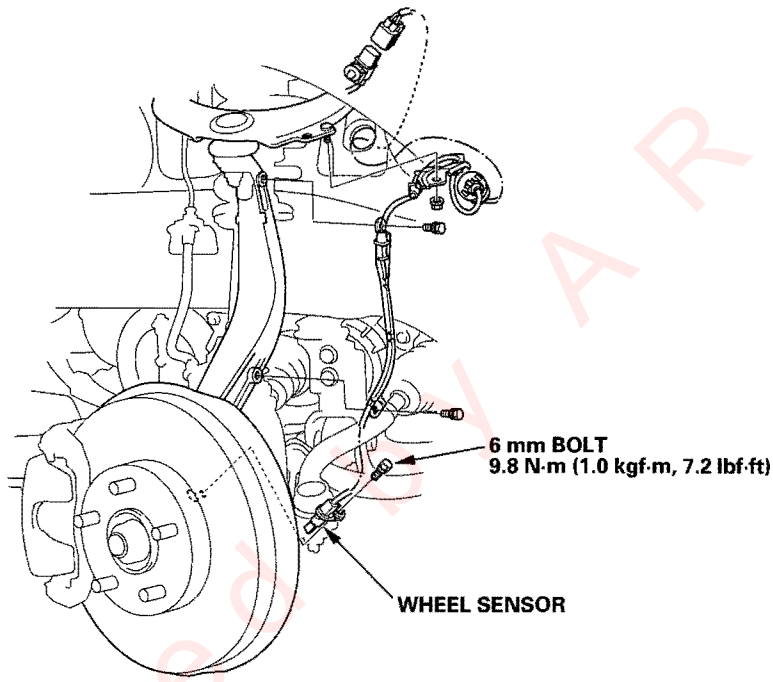

Rear

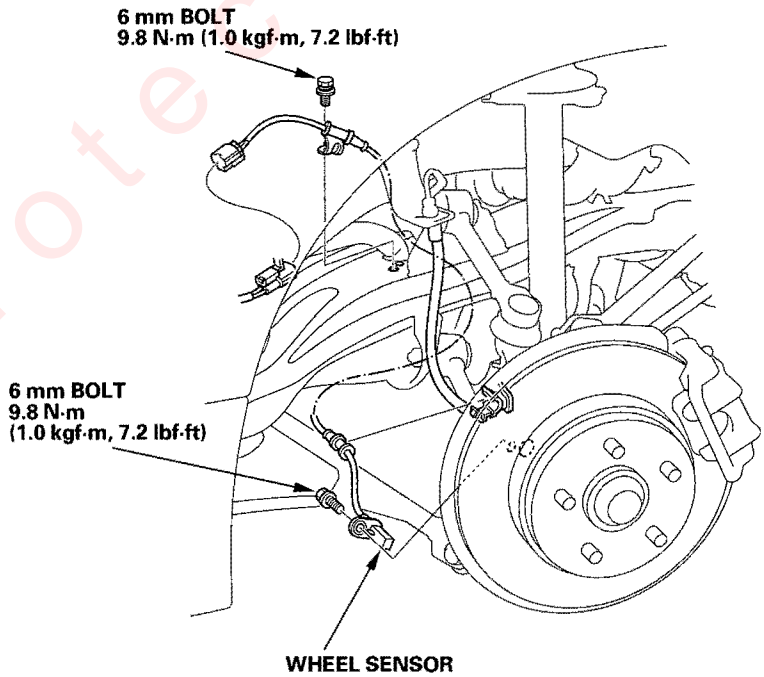

Protected by AR

SUPPLEMENTAL RESTRAINT SYSTEM (SRS) (If body maintenance required)

The Acura TL SRS includes a driver's airbag in the steering wheel hub, a passenger's airbag in the dashboard above the glove box, seat belt tensioners in the front seat belt retractors, side curtain airbags in the sides of the roof, and side airbags in the front seat-backs. Information necessary to safely service the SRS is included in this Service Manual. Items marked with an asterisk (*) on the contents page include or are located near SRS components. Servicing, disassembling, or replacing these items requires special precautions and tools, and should be done only by an authorized Acura dealer.

- To avoid rendering the SRS inoperative, which could lead to personal injury or death in the event of a severe frontal collision, all SRS service work must be performed by an authorized Acura dealer.
- Improper service procedures, including incorrect removal and installation of the SRS, could lead to personal injury caused by unintentional deployment of the airbags and/or side airbags.
- Do not bump or impact the SRS unit, front impact sensors, side impact sensors whenever the ignition switch is ON (II), or for at least 3 minutes after the ignition switch is turned OFF. Otherwise, the system may fail in a collision, or airbags may deploy.
- SRS electrical connectors are identified by yellow color coding. Related components are located in the steering column, front console, dashboard, dashboard lower panel, in the dashboard above the glove box, in the front seats, in the roof side, and around the floor. Do not use electrical test equipment on these circuits.

Protected by AR



Body

Special Tools 20-2

Doors

Component Location Index 20-3
Front Door Panel Removal/Installation 20-7
Front Door Outer Handle Replacement 20-9
Front Door Latch Replacement 20-12
Front Door Glass and Regulator Replacement 20-13
Front Door Sash Inner Trim Replacement 20-14
Front Door Sash Outer Trim Replacement 20-15
Front Door Glass Outer Weatherstrip Replacement 20-15
Front Door Outer Molding Replacement 20-16
Front Door Weatherstrip Replacement 20-17
Rear Door Panel Removal/Installation 20-17
Rear Door Outer Handle Replacement 20-20
Rear Door Latch Replacement 20-22
Rear Door Glass and Regulator Replacement 20-23
Rear Door Sash Inner Trim Replacement 20-25
Rear Door Sash Outer Trim Replacement 20-26
Rear Door Glass Outer Weatherstrip Replacement 20-27
Rear Door Outer Molding Replacement 20-28
Rear Door Weatherstrip Replacement 20-29
Rear Door Hook Pin and Catch Replacement 20-29
Front and Rear Door Glass Adjustment 20-30
* Front and Rear Door Position Adjustment 20-31
Front and Rear Door Striker Adjustment 20-32

Mirrors

Component Location Index 20-33
Power Mirror Replacement 20-34
Mirror Holder Replacement 20-34
Rearview Mirror Replacement 20-35

Glass

Component Location Index 20-37
Windshield Replacement 20-38
Rear Window Replacement 20-43

Moonroof

Component Location Index 20-49
Symptom Troubleshooting Index 20-50
Glass Height Adjustment 20-51
Glass Replacement 20-51
Wind Deflector Replacement 20-52
Drain Channel Replacement 20-52
Sunshade Replacement 20-53
Motor Replacement 20-54
Frame and Drain Tube Replacement 20-55
Inner Cable Replacement 20-57
Closing Force and Opening Drag Check ... 20-59

Interior Trim

Component Location Index 20-61
* Trim Removal/Installation-Door Area 20-62
* Trim Removal/Installation -Rear Shelf Area 20-66
Trim Removal/Installation-Trunk Area 20-68
Trim Removal/Installation-Trunk Lid 20-69
* Headliner Removal/Installation 20-70
* Front Carpet Replacement 20-73
Rear Carpet Replacement 20-75

Consoles

Center Console Rear Section Removal/Installation 20-77
Center Console Panel Removal/Installation 20-78
Center Console Rear Cover Replacement 20-80
Center Console Beverage Holder Replacement 20-81
Center Console Hinge Replacement 20-81

Dashboard

Instrument Panel Removal/Installation 20-82
Driver's Dashboard Lower Cover Removal/Installation 20-82
Driver's Dashboard Under Cover Removal/Installation 20-83
Upper panel Removal/Installation 20-83
Glove Box Housing Removal/ Installation 20-84
Passenger's Dashboard Under Cover Removal/Installation 20-84
* Glove Box Removal/Installation 20-85
Glove Box Lock Cylinder Replacement 20-85
Glove Box Damper Replacement 20-87
Passenger's Dashboard Trim Removal/Installation 20-88
Dashboard Side Vent Removal/Installation 20-88
* Dashboard Removal/Installation 20-89
Steering Hanger Beam Replacement 20-94
* Dashboard Upper Panel Removal/Installation 20-96

Protected by CARFAX

Seats
Component Location Index 20-98
* Front Seat Removal/Installation 20-99
* Front Seat Disassembly/Reassembly -4-Way Power 20-101
* Front Seat Disassembly/Reassembly -10-Way Power 20-102
Front Seat Linkage Disassembly/ Reassembly-10-Way/4-Way Power 20-103
* Front Seat Recline Motor Replacement 20-104
* Front Seat Lumbar Support Replacement 20-105
* Front Seat Cover Replacement 20-107
Rear Seat Removal/Installation 20-112
Rear Seat Armrest Replacement 20-113
Trunk Pass-through Cover Key Cylinder Replacement 20-113
Trunk Pass-through Cover Replacement 20-114
Rear Seat-back Cover Replacement 20-115
Rear Seat Cushion Cover Replacement 20-117

Bumpers
Front Bumper Removal/Installation 20-118
Rear Bumper Removal/Installation 20-120

Hood
Adjustment 20-122
Hood Support Strut Replacement 20-123
Hood Seal Replacement 20-124
Hood Insulator Replacement 20-124

Trunk Lid
Adjustment 20-125
Trunk Lid Torsion Bar Replacement 20-126
Trunk Lid Weatherstrip Replacement..... 20-127

Fuel Fill Door
Adjustment 20-128

Exterior Trim
Hood Molding Replacement 20-129
Front Grille Replacement 20-129
Front Grille Lower Molding Replacement 20-130
Front Bulkhead Cover Replacement 20-130
Front Fender Trim Replacement 20-131
Cowl Cover Replacement 20-132
Roof Molding Replacement 20-134
Front Side Sill Panel Replacement 20-136
Rear Side Sill Panel Replacement 20-137
Rear License Trim Replacement 20-138
Rear Under Cover Replacement 20-139
Emblem/Sticker Replacement 20-140

Fenderwell
Front Strake Replacement 20-141
Front Inner Fender Replacement 20-142
Splash Shield Replacement 20-143
Front Fender Fairing Replacement 20-144
Fuel Pipe Protector Replacement 20-144
Rear Inner Fender Replacement 20-145
Rear Air Outlet Replacement 20-146

Openers
Component Location Index 20-147
Hood Opener Cable Replacement 20-148
* Trunk Lid Opener Cable Replacement 20-150
Hood Latch Replacement 20-152
Hood Release Handle Replacement 20-153
Fuel Fill Door Opener Replacement 20-153
Trunk Lid Latch Replacement 20-154

Frame
Frame Stiffener Replacement 20-155
Subframe Replacement 20-156
* Frame Repair Chart 20-158

Protected by AR

Special Tools

Ref. No.	Tool Number	Description	Qty
①	SOJATP2014	KTC Trim Tool Set	1
②	07AAC-S3VA100	Vent Panel Puller (1 pair)	1
③	08M10-SM4-100 or 07AAE-SDAA100	Torsion Bar Assembly Tool	1
④	A 177A	Snap-on Trim Pad Remover	1

①, ④: Available through the American Honda Tool and Equipment Program; call 888-424-6857.

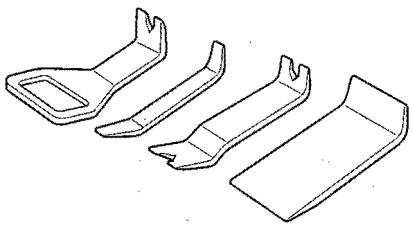

①

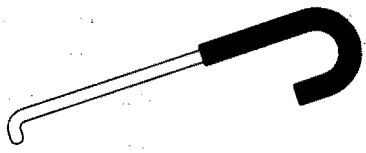

②

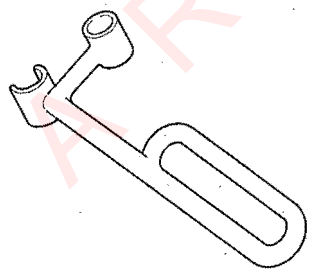

③

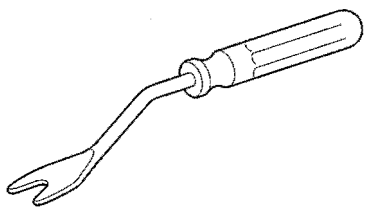

④

Protected by AR

Component Location Index

Front Door

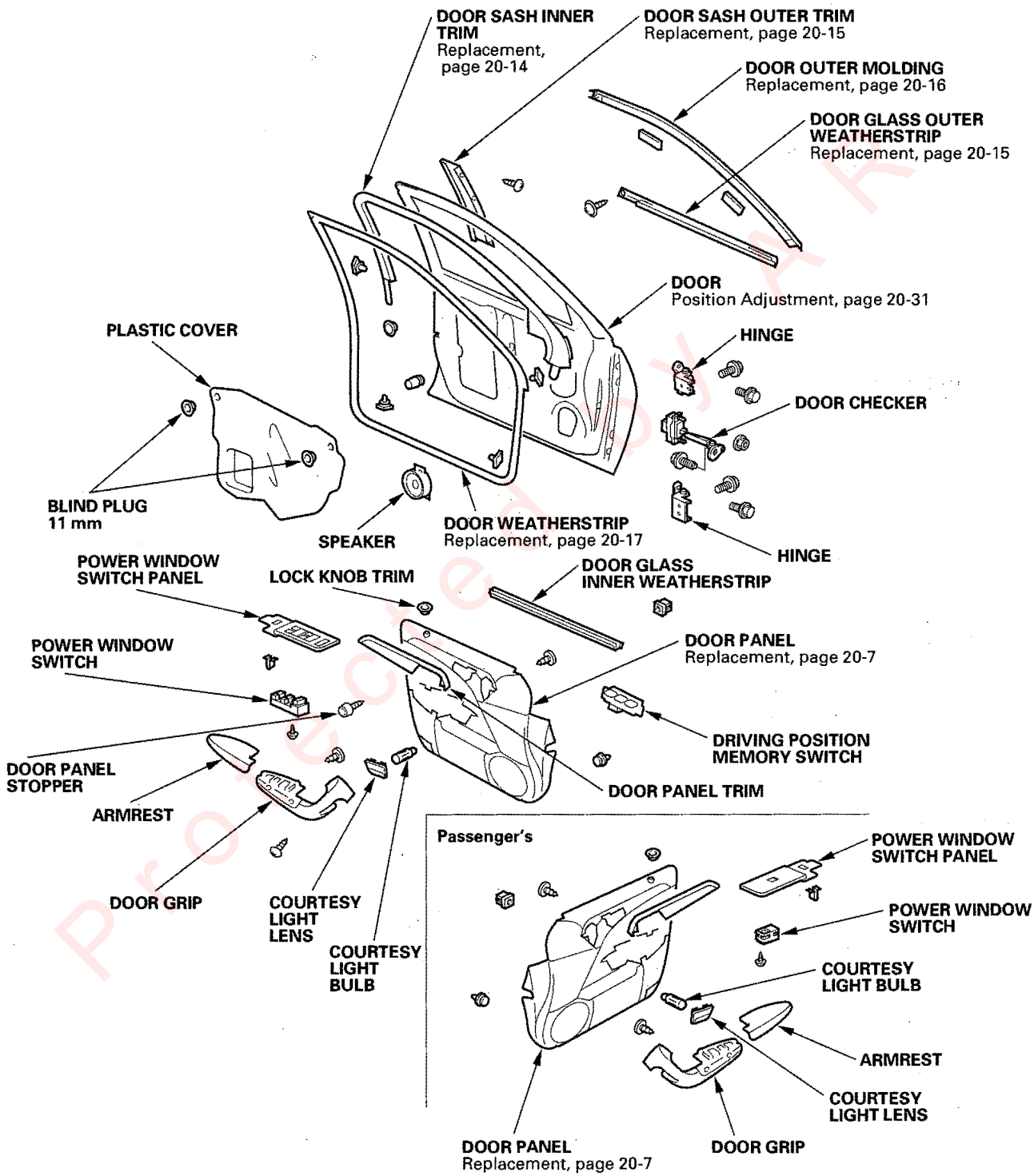

(cont'd)

Component Location Index (cont'd)

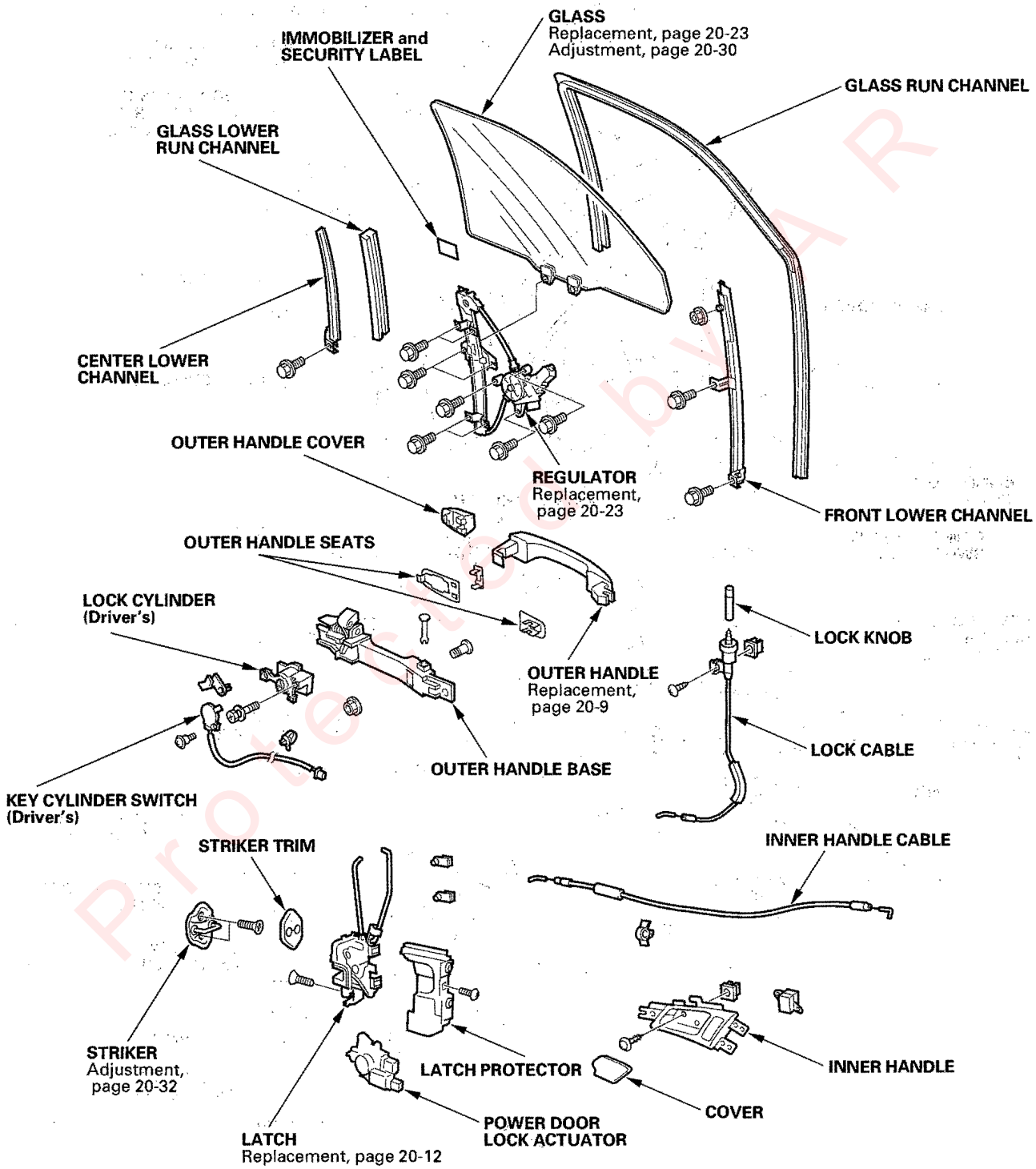

Protected by AR

Rear Door

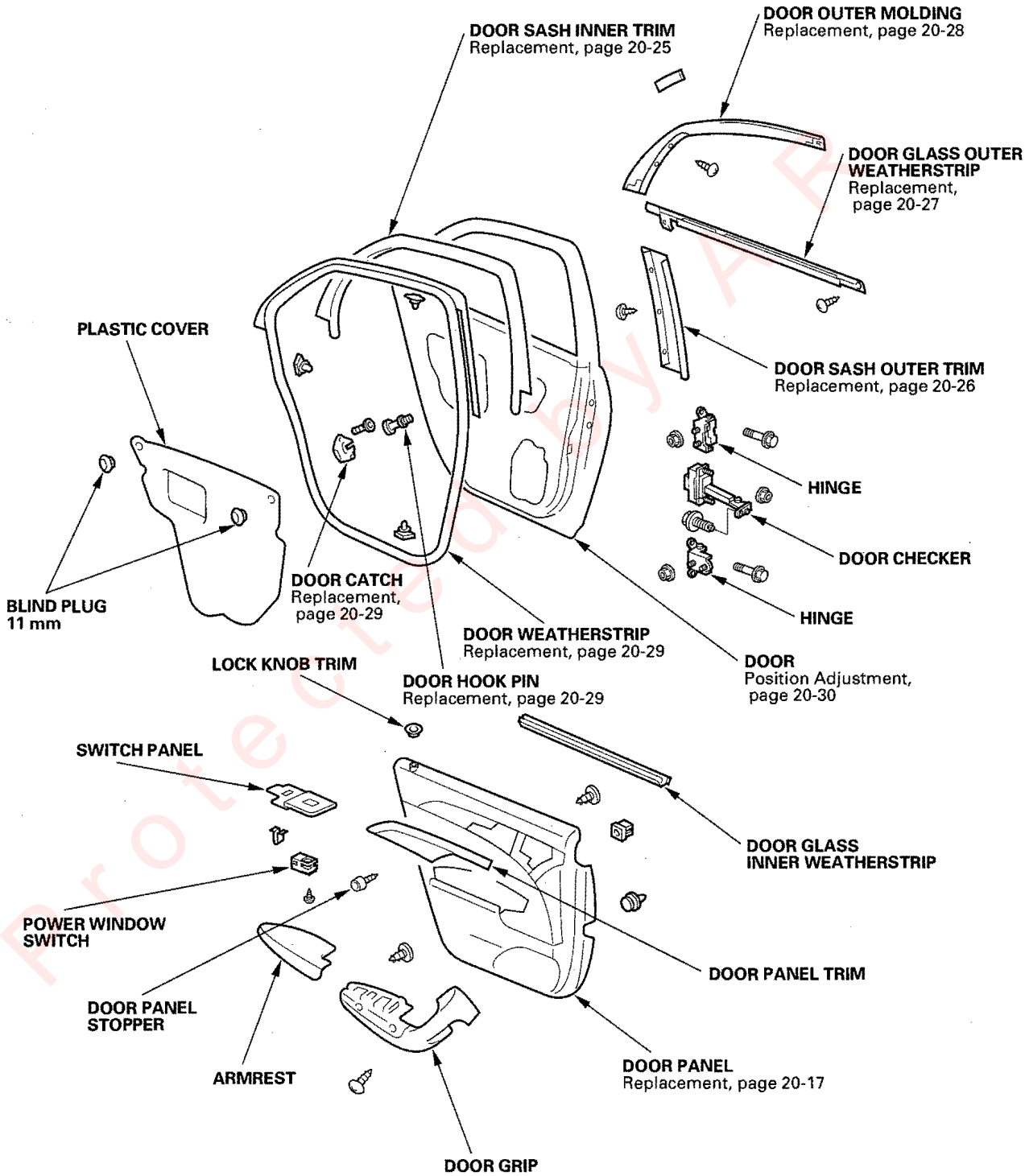

Protected by AR

(cont'd)

Component Location Index (cont'd)

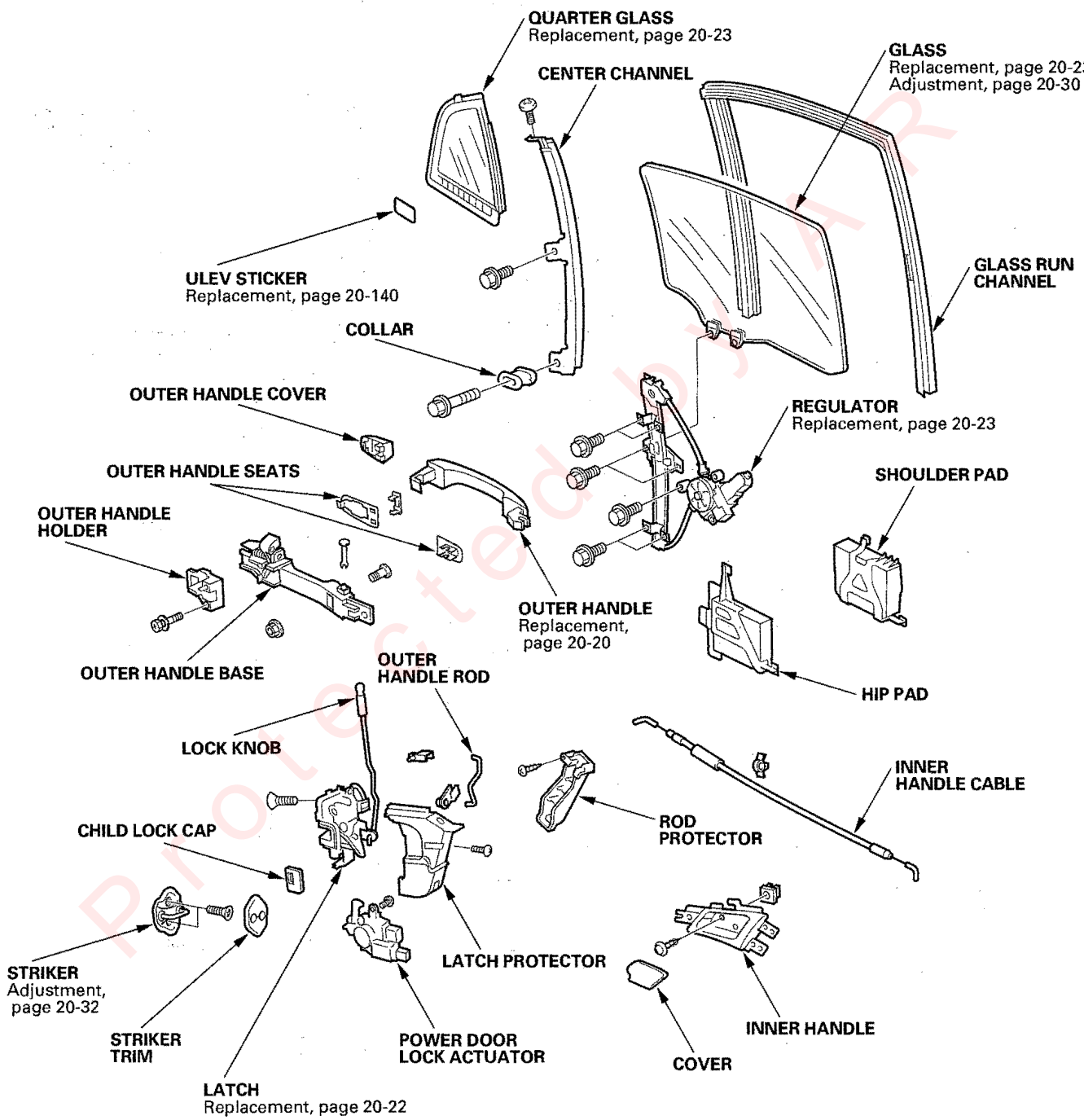

Protected by AR

Front Door Panel Removal/Installation

Special Tools Required
- KTC trim tool set SOJATP2014
- Trim pad remover, Snap-on A 177A, or equivalent, commercially available

NOTE: Use the appropriate tool from the KTC trim tool set to avoid damage when prying components.

1. Lower the glass fully.

2. Using a trim tool, push on the rear hook (A) and pivot the cover (B) on the front hook (C), then remove the cover and the screws (D) securing the inner handle (E).

Fastener Locations
D ▶ : Screw, 2

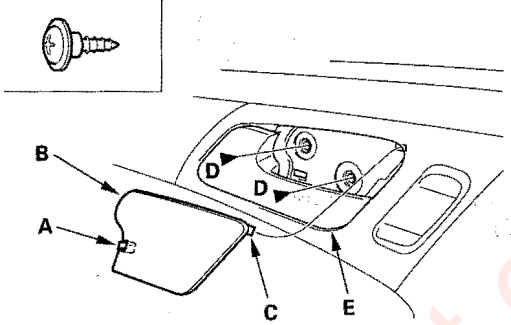

3. Remove the door panel (A) with as little bending as possible to avoid creasing or breaking it.

   -1 Remove the stopper (B) and screw (C) from the door panel.
   -2 Release the clips (D) that hold the door panel with a commercially available trim pad remover.
   -3 Starting at the rear, pull the door panel upward, then release the lock knob (E).

   NOTE: The inner handle cable (F) is connected to the door panel. Do not pull the door panel up too far, or the inner handle cable will be damaged.

Fastener Locations
B ▶ : Stopper screw, 1 C ▶ : Screw, 1



D ▷ : Clip, 7

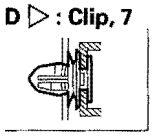

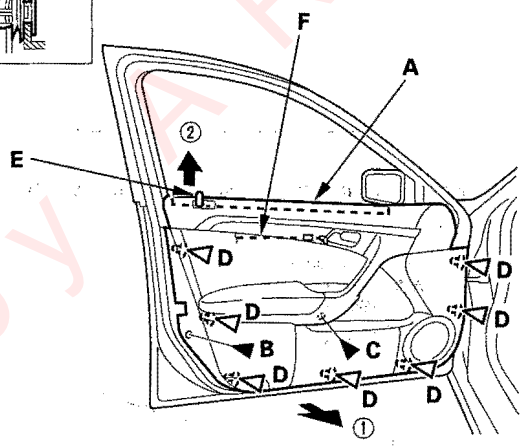

4. While holding the door panel (A) away from the door, disconnect the inner handle cable (B), driving position memory switch connector (C) (driver's door), power door lock switch connector (D), power window switch connector (E, F), harness connector (G) (driver's door), door courtesy light harness clips (H) (passenger's door), and remove the door courtesy light (I) (passenger's door) by turning it counter clockwise one quarter turn.

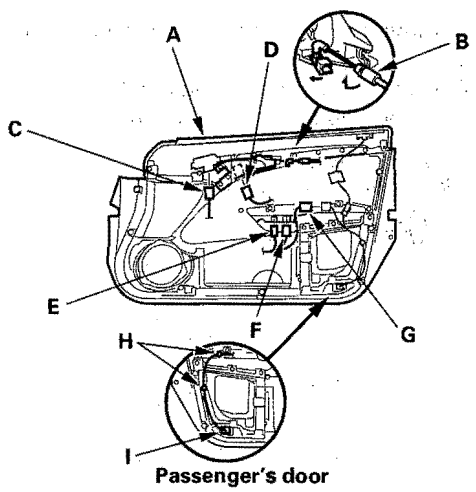

(cont'd)

Protected by AR

Front Door Panel Removal/Installation (cont'd)

5. If necessary, remove the door glass inner weatherstrip (A) from the door panel (B) by pulling it down.

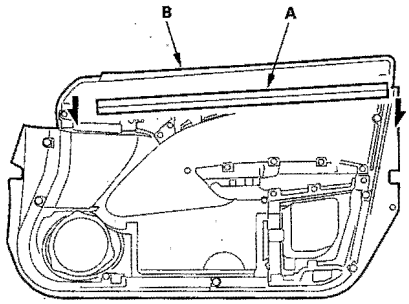

6. Remove the screws (A), then remove the door grip (B).

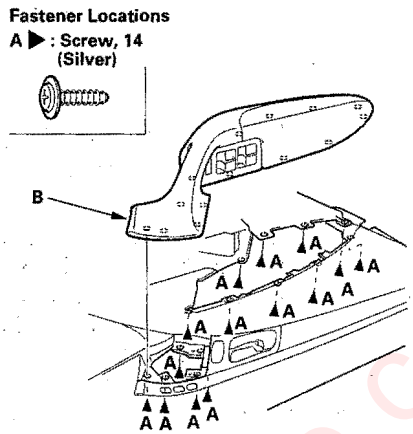

7. Remove the power window switch panel (A).
   1. Remove the screws (B), then remove the armrest (C).
   2. Release the hooks (D) and clip (E), then remove the power window switch panel.

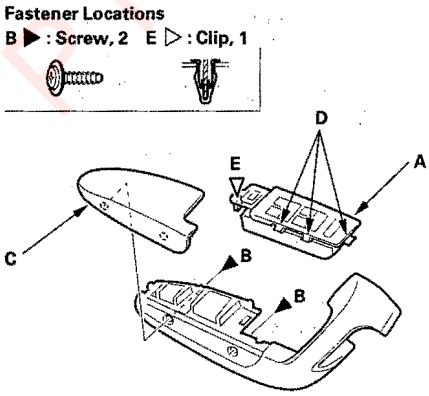

8. Remove the screws (A, B), then remove the door trim (C).

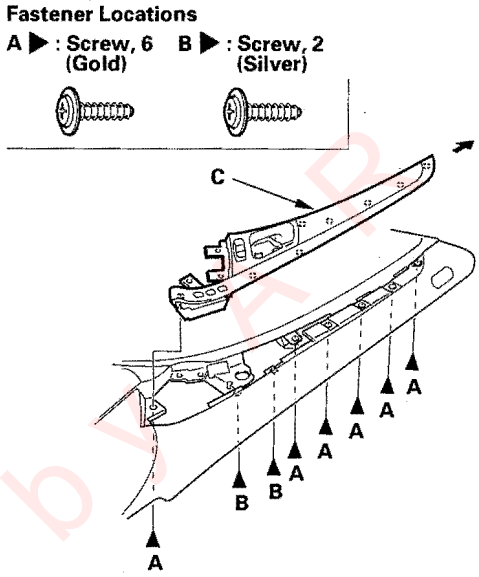

9. Remove the inner handle (A) by releasing the hook (B).

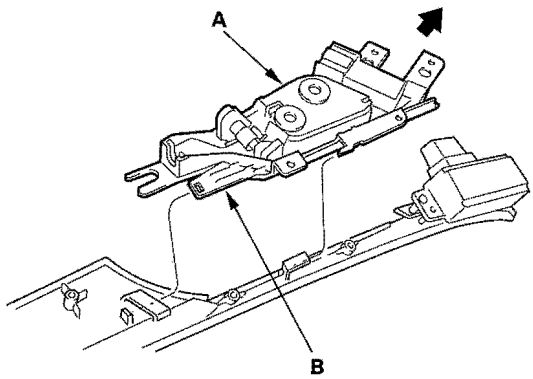

10. Install the door panel in the reverse order of removal, and note these items:

- Replace any damaged clips.
- Make sure the connectors are plugged in properly, and the cable is connected properly.
- Make sure the window and power door lock operate properly.
- Reset the power window control unit (see page 22-221) on the door that the panel was removed from driver's and/or passenger's.

Protected by AP

Front Door Outer Handle Replacement

NOTE: Put on gloves to protect your hands.

1. Remove these items:
   - Door panel (see page 20-7)
   - Plastic cover, as necessary (see page 20-3)
2. Raise the glass fully.
3. Remove the bolt (A), then remove the center lower channel (B) by pulling it downward.

   NOTE: Be careful of sharp edges.

Fastener Location
A ▶ : Bolt, 1

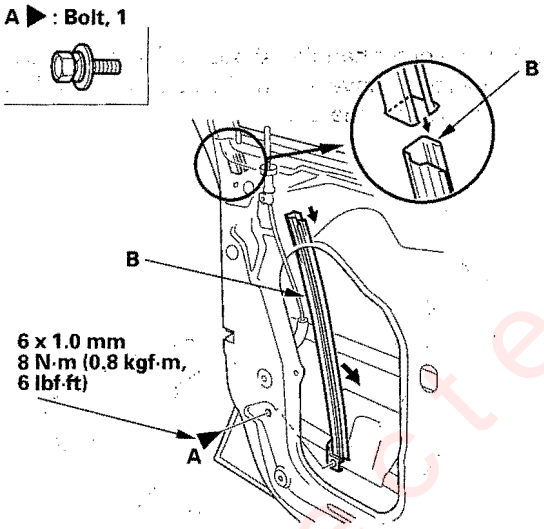

4. Disconnect the outer handle rod (A) from the latch (B).

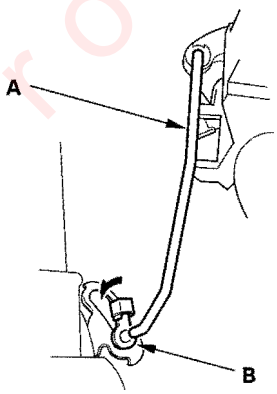

5. Remove the lock cylinder (A) (driver's door) or outer handle cover (B) (passenger's side).
   -1 Remove the maintenance hole seal (C).
   -2 Loosen the bolt securing the lock cylinder (driver's door), or outer handle cover (passenger's side).
   -3 Disconnect the cylinder rod (D) (driver's door).

   NOTE: Hold the lock cylinder (driver's door) or outer handle cover (passenger's side) with your hand to prevent it from falling when removing the bolt.

Fastener Location
▶ : Bolt, 1

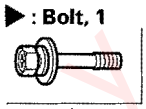

Driver's door

Passenger's side

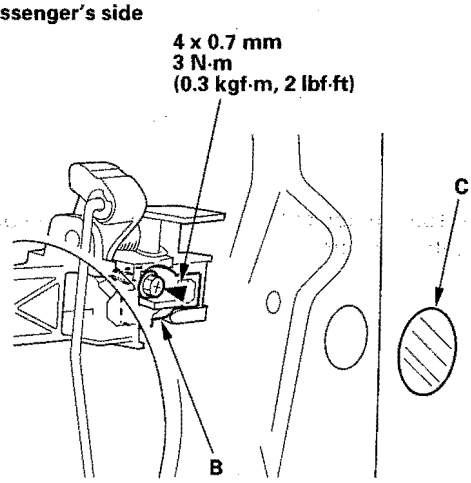

(cont'd)

Protected by AR

Front Door Outer Handle Replacement (cont'd)

6. Disconnect the cylinder switch connector (A), and detach the harness clip (B), then remove the cylinder switch (C) (driver's door).

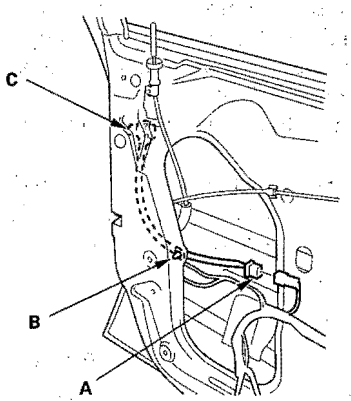

7. Remove the screw, then separate the lock cylinder (A), cylinder switch (B) (driver's door).

   NOTE: Keep your hand over the outer handle cover to prevent it from falling during removal.

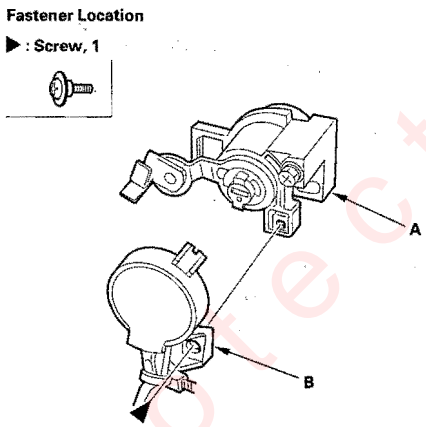

8. Release the hook (A), and then remove the outer handle cover (B).

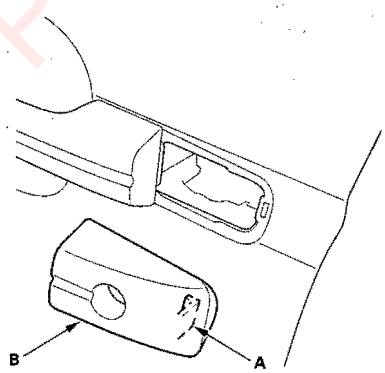

9. Pull the pin (A) up while pinching its lower end.

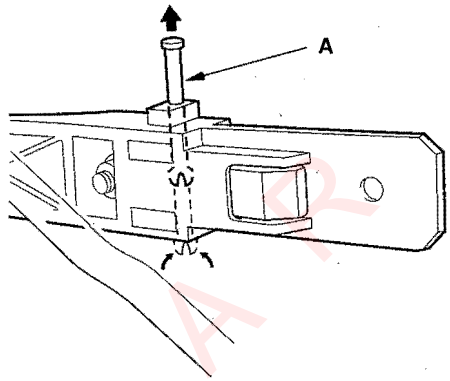

10. Pull the outer handle (A) out, and then back as shown to remove it from the door panel. Take care not to scratch the door.

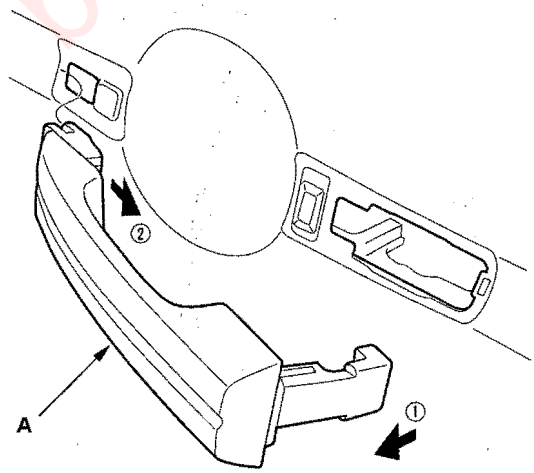

Protected by AR

11. Release the hooks (A, B, C), then remove the outer handle front seat (D) and outer handle rear seat (E).

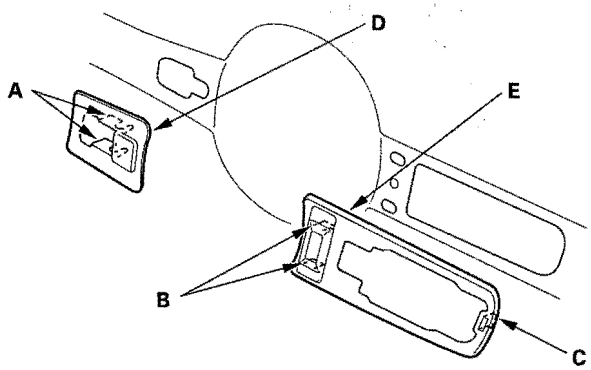

12. Remove the outer handle base (A).

-1 Loosen the nut.
-2 Release the tab (B) and slide the outer handle base forward.

Fastener Location

● : Nut, 1

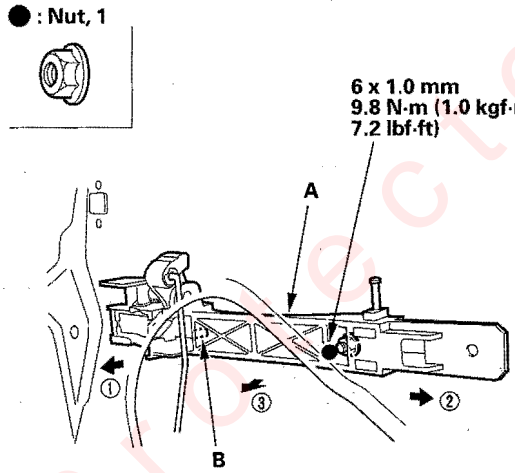

13. Disconnect the outer handle rod (A) from outer handle base (B).

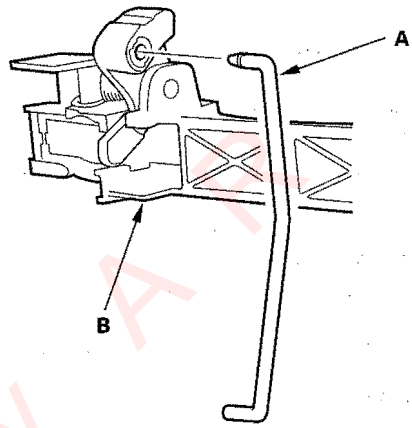

14. Install the handle in the reverse order of removal, and note these items:

- Reinstall the lock cylinder (driver's door) or the outer handle holder (passenger's door) before installing the outer handle cover.
- Make sure the cylinder switch harness is routed properly (driver's door).
- Make sure the cylinder switch connector is plugged in properly, and each rod is connected securely (driver's door).
- Make sure the door key cylinder/door locks operate properly (driver's door).
- Make sure the door handle works properly.
- When reinstalling the door panel, make sure the plastic cover is installed properly and sealed around its outside perimeter to prevent water leaks.

Protected by A

Front Door Latch Replacement

NOTE: Put on gloves to protect your hands.

1. Raise the glass fully.
2. Remove these items:
   - Door panel (see page 20-7)
   - Plastic cover, as necessary (see page 20-3)
   - Center lower channel (see step 3 on page 20-9)
3. Disconnect the cylinder rod from the lock cylinder, and disconnect the outer handle rod from the outer handle (see step 5 on page 20-9).
4. Remove the screw securing the lock knob (A).

Fastener Location

▶ : Screw, 1

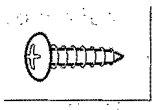

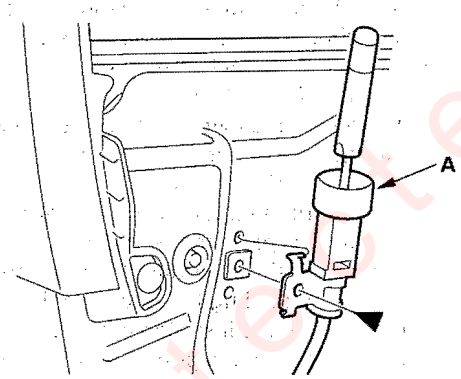

5. Detach the inner handle cable clip (A), and disconnect the actuator connectors (B). Remove the screws (C), then remove the latch (D) through the hole in the door. Take care not to bend the cylinder rod (E), inner handle cable (F), and lock cable (G).

Fastener Locations

C ▶ : Screw, 3

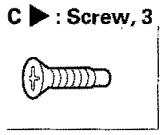

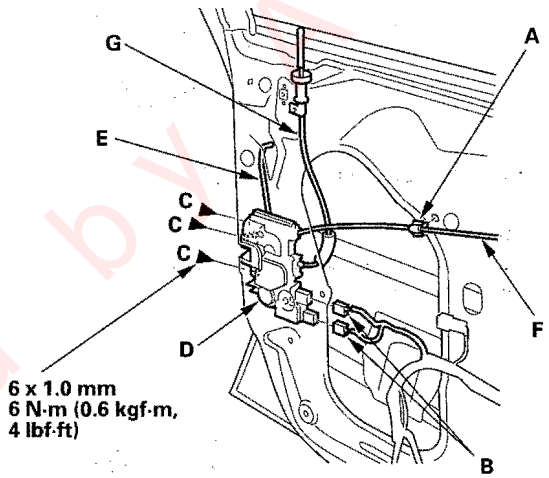

6. Install the latch in the reverse order of removal, and note these items:
   - Make sure the actuator connectors are plugged in properly, and each rod is connected securely.
   - Make sure the door locks and opens properly.
   - When reinstalling the door panel, make sure the plastic cover is installed properly and sealed around its outside perimeter to prevent water leaks.

Protected by

Front Door Glass and Regulator Replacement

NOTE: Put on gloves to protect your hands.

1. Remove these items:
   - Door panel (see page 20-7)
   - Plastic cover (see page 20-3)

2. Carefully raise the glass (A) until you can see the bolts through the oval holes in the door, then remove them. Carefully pull the glass out through the window slot. Take care not to drop the glass inside the door.

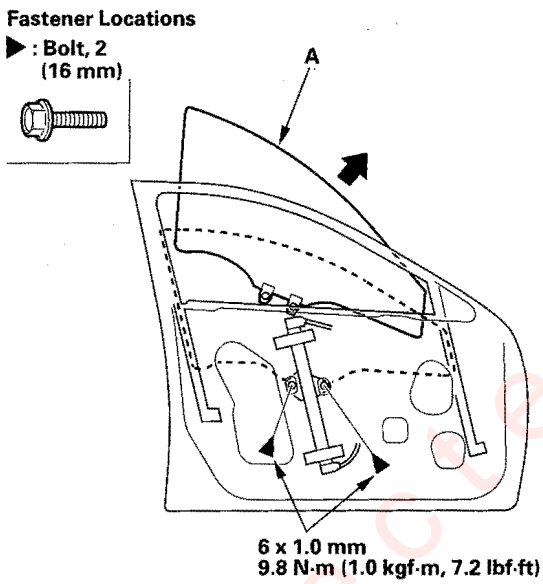

3. Disconnect the connector (A) from the regulator (B).

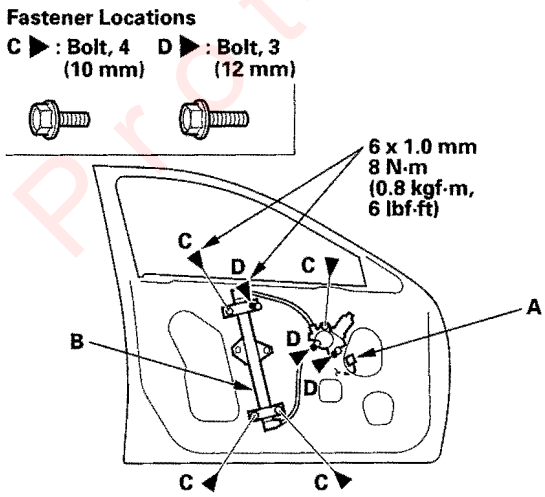

4. Remove the bolts (C), and loosen the bolts (D), then remove the regulator through the hole in the door.

5. Apply multipurpose grease to the sliding surfaces of the regulator (A) where shown.

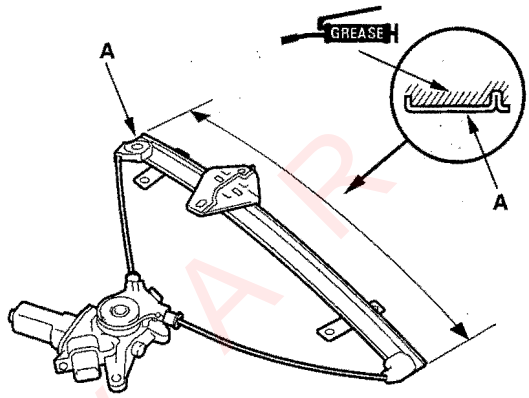

6. Install the glass and regulator in the reverse order of removal, and note these items:
   - Roll the glass up and down to see if it moves freely without binding.
   - Make sure that there is no clearance between the glass and glass run channel when the glass is closed.
   - Adjust the position of the glass as necessary (see page 20-30).
   - Reset the power window control unit (see page 22-221) on the door that the panel was removed from driver's and/or passenger's.
   - Check for water leaks (see step 7 on page 20-30).
   - Test-drive and check for wind noise and rattles.
   - When reinstalling the door panel, make sure the plastic cover is installed properly and sealed around its outside perimeter to prevent water leaks.
   - Make sure the power door locks, windows, and power mirror operate properly.

Protected by AR

Front Door Sash Inner Trim Replacement

NOTE: Take care not to scratch the door.

1. Lower the glass fully.
2. Remove the door panel (see page 20-7).
3. Detach the door sash inner trim and weatherstrip mounting clips.

Fastener Locations
▷: **Clip, 6 (Orange)**

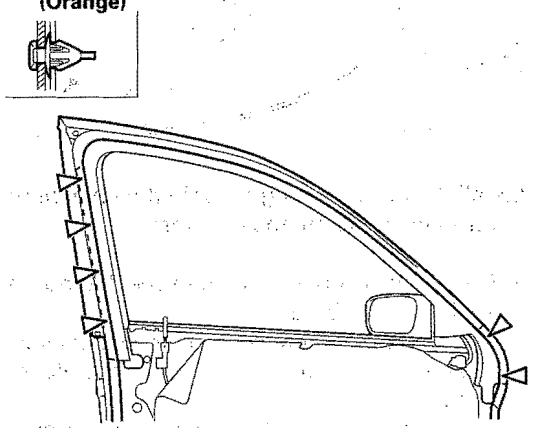

4. Remove the door sash inner trim (A).
   1 Detach the clips.
   2 While removing the lower edge of the door sash inner trim from the edge of the sash, and release the hooks (B, C), then remove the trim.

Fastener Locations
▷: **Clip, 2 (White)**

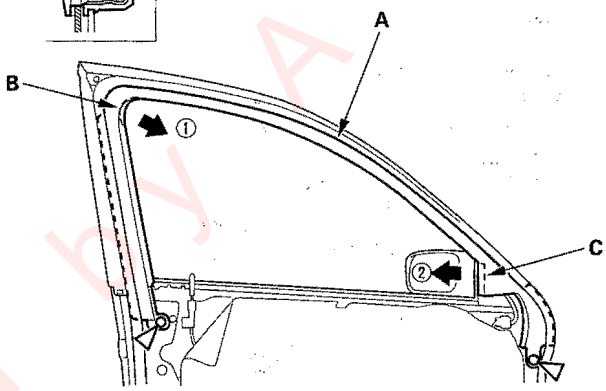

5. Reinstall new door outer molding in the reverse order of removal, and note these items:
   - Replace any damaged clips.
   - Push the clips into place securely.

Protected by AR

Front Door Sash Outer Trim Replacement

NOTE: Take care not to scratch the door.

1. Lower the glass fully.
2. Remove the door glass outer weatherstrip (see page 20-15).
3. Pull the glass run channel (A) away as needed, and remove the screws. Pull back the door sash outer trim (B) to release the hook (C) from the door rear edge of the door.

Fastener Locations
▶: Screw, 3 (12 mm)

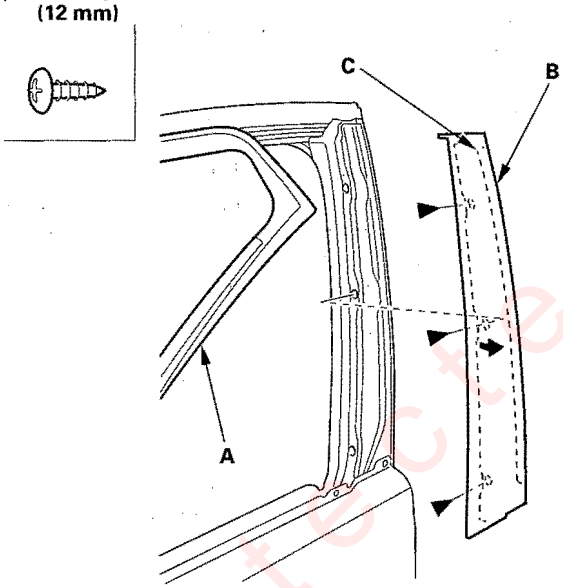

4. Install the trim in the reverse order of removal.

Front Door Glass Outer Weatherstrip Replacement

Special Tools Required
KTC trim tool set SOJATP2014

NOTE:
- The door glass outer weatherstrip will need replacement because it will bend during removal.
- Put on gloves to protect your hands.
- Take care not to scratch the door.
- Use the appropriate tool from the KTC trim tool set to avoid damage when prying components.

1. Remove these items:
   - Door panel (see page 20-7)
   - Power mirror (see page 20-34)
2. Remove lower portion of the weatherstrip (see page 20-17).
3. Remove the screw from the rear edge of the door.

Fastener Location
▶: Screw, 1 Aluminum with removable EPT washer

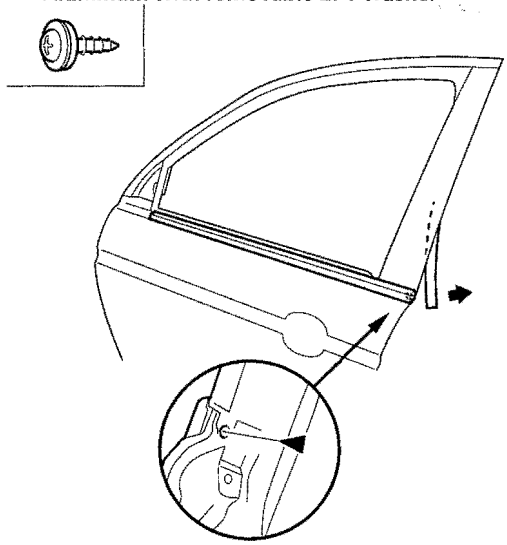

(cont'd)

Protected by AR

Front Door Glass Outer Weatherstrip Replacement (cont'd)

4. Starting at the rear, pull the door glass outer weatherstrip (A) up at each portion where the inner molding (B) catches the inside edge of the window slot, then remove the weatherstrip.

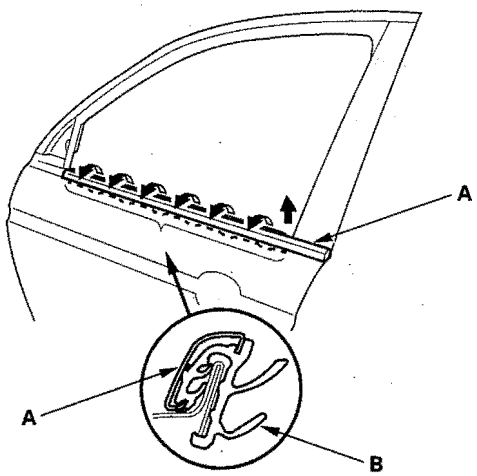

5. Install a new weatherstrip in the reverse order of removal.

Front Door Outer Molding Replacement

Special Tools Required
KTC trim tool set SOJATP2014

NOTE:
- The door outer molding will need replacement because it will bend during removal.
- Put on gloves to protect your hands.
- Take care not to scratch the door.
- Use the appropriate tool from the KTC trim tool set to avoid damage when prying components.

1. Remove the power mirror (see page 20-34). To prevent scratching the power mirror and door, wrap the power mirror with a shop towel. Disconnecting the power mirror connector is not required.

2. Remove the door outer molding (A):

   -1 Pry out the rear clip with a trim tool.
   -2 While removing the upper edge of the door outer molding from the edge of the sash, cut the double-sided adhesive tapes (B) with a utility knife, then remove the molding.

Fastener Location
▷: Clip, 1

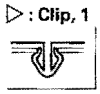

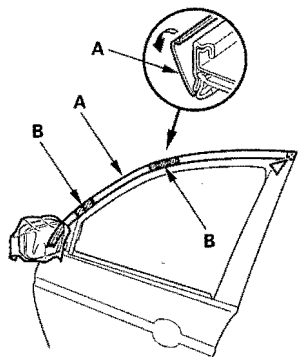

3. Scrape off the remaining double-sided adhesive tape from the sash, then clean the sash surface with a sponge dampened in alcohol.

4. Install a new door outer molding in the reverse order of removal, and note these items:

   - Clean all adhesive contact areas with alcohol.
   - Push the clip and the adhesive portions into place securely.
   - Make sure the upper and lower sides of the molding are catching the edges of the sash properly.

Protected by AR

Front Door Weatherstrip Replacement

NOTE:
- Take care not to scratch the door.
- Use a clip remover to remove the clips.

1. At the front pillar, remove the door checker mounting bolt (A).

Fastener Locations
A ▶ : Bolt, 1 B ▷ : Clip, 6 (Orange) C ▷ : Clip, 31 (Pink) D ▷ : Clip, 2

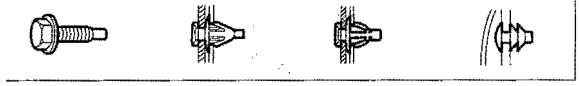

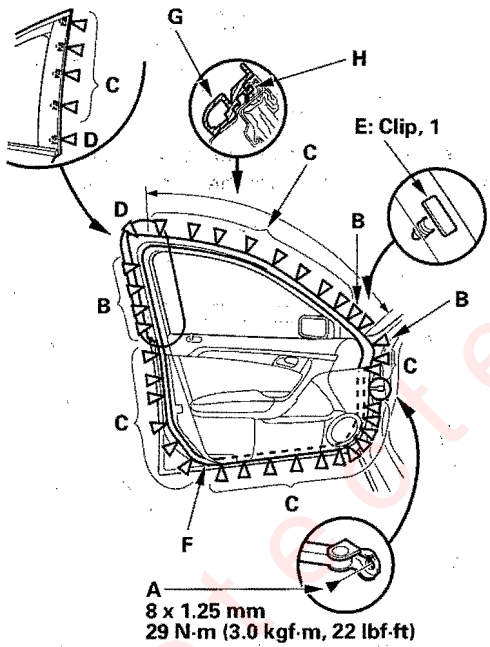

2. Detach the clips (B, C, D, E), then remove the door weatherstrip (F).

3. Install the weatherstrip in the reverse order of removal, and note these items:

- Replace any damaged clips.
- Make sure the weatherstrip is installed in the holder (G) securely.
- Apply liquid thread lock to the door checker mounting bolt before installation.
- Check for water leaks (see step 7 on page 20-30).

Rear Door Panel Removal/ Installation

Special Tools Required
- KTC trim tool set SOJATP2014
- Trim pad remover, Snap-on A 177A, or equivalent, commercially available

NOTE: Use the appropriate tool from the KTC trim tool set to avoid damage when prying components.

1. Lower the glass fully.

2. Using a trim tool, push on the rear hook (A) and pivot the cover (B) on the front hook (C), then remove the cover and the screws (D) securing the inner handle (E).

Fastener Locations
D ▶ : Screw, 2

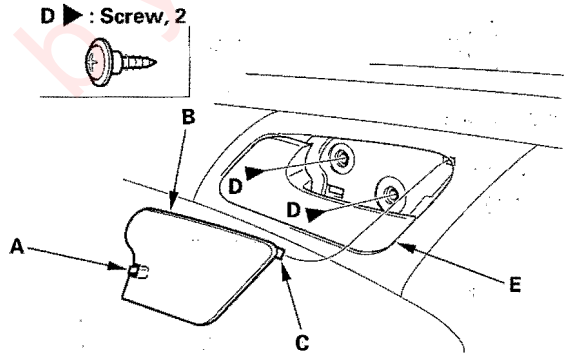

Protected by A P

(cont'd)

Rear Door Panel Removal/Installation (cont'd)

3. Remove the door panel (A) with as little bending as possible to avoid creasing or breaking it.

   1 Remove the stopper (B) and screw (C) from the door panel.
   2 Release the clips (D) that hold the door panel with a commercially available trim pad remover.
   3 Starting at the rear, pull the door panel upward, then release the lock knob (E).

   NOTE: The inner handle cable (F) is connected to the door panel. Do not pull the door panel up too far, or the inner handle cable will be damaged.

Fastener Locations
B ▶ : Stopper screw, 1 C ▶ : Screw, 1

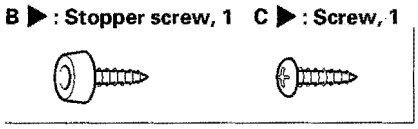

D ▷ : Clip, 8

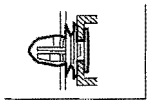

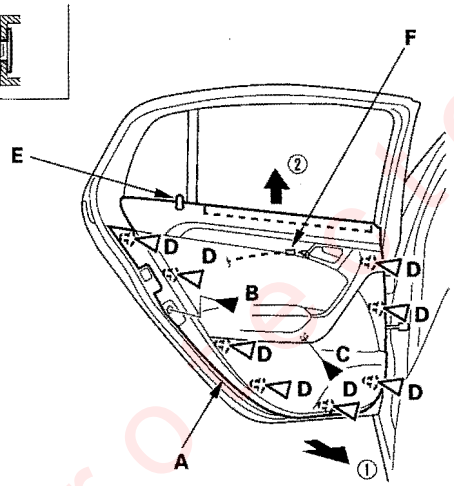

4. While holding the door panel (A) away from the door, disconnect the inner handle cable (B) and power window switch connector (C).

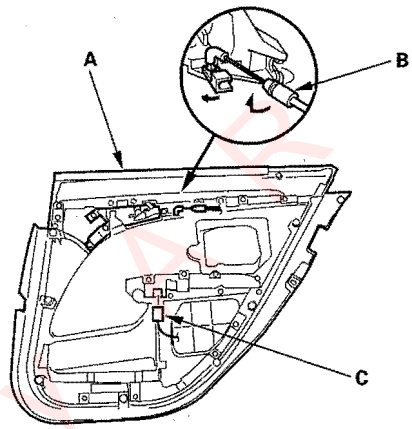

5. If necessary, remove the door glass inner weatherstrip (A) from the door panel (B).

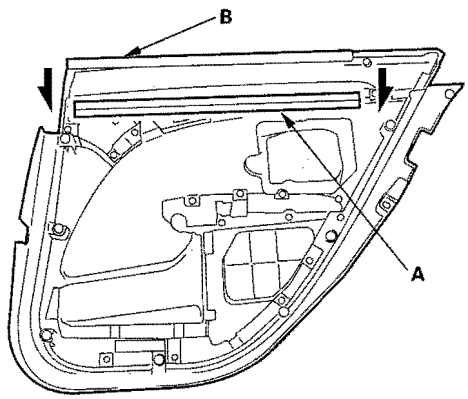

6. Remove the screws (A), then remove the door grip (B).

Fastener Locations
A ▶ : Screw, 12 (Silver)

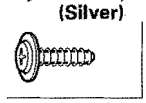

Processed by ARK

7. Remove the power window switch panel (A).

   1. Remove the screws (B), then remove the armrest (C).
   2. Replace the hooks (D) and clip (E), then remove the power window switch panel.

Fastener Locations
B ▶ : Screw, 2 E ▷ : Clip, 1

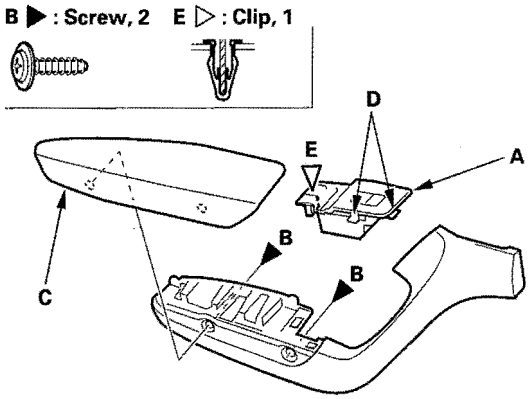

8. Remove the screws (A, B), then remove the door trim (C).

Fastener Locations
A ▶ : Screw, 5 (Gold) B ▶ : Screw, 2 (Silver)

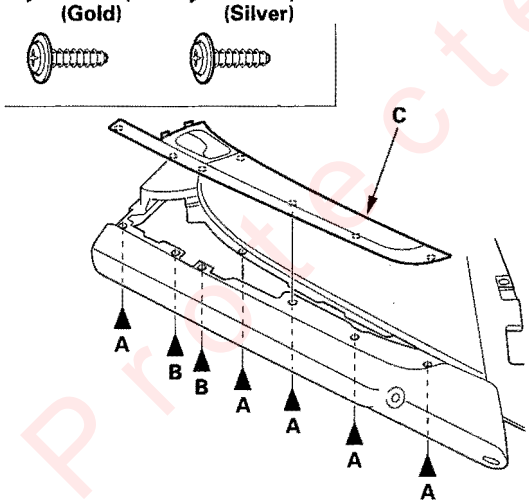

9. Remove the inner handle (A) by releasing the hook (B).

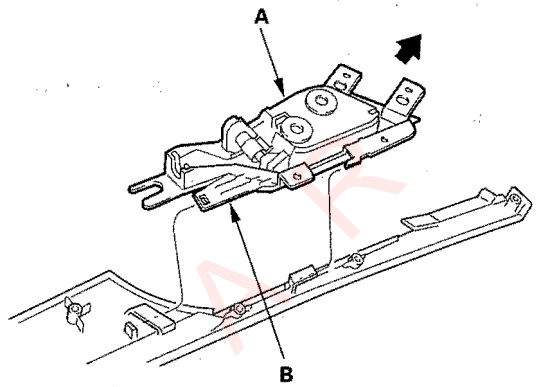

10. Install the door panel in the reverse order of removal, and note these items:

- Replace any damaged clips.
- Make sure the connectors are plugged in properly, and the cable is connected properly.
- Make sure the window and power door lock operate properly.

Protected by ARK

Rear Door Outer Handle Replacement

NOTE: Put on gloves to protect your hands.

1. Remove these items:
   - Door panel (see page 20-17)
   - Plastic cover, as necessary (see page 20-5)
   - Glass (see page 20-23)

2. Disconnect the outer handle rod (A) from the latch (B).

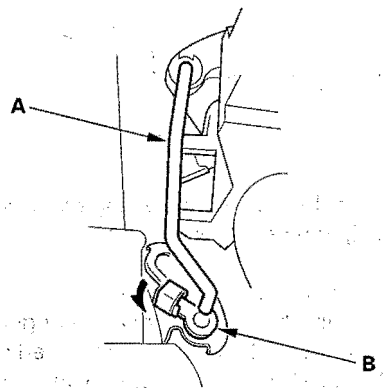

3. Remove the screws (A, B). Disconnect the lock knob and door lock actuator connectors (C), and release the hook (D), and remove the latch (E), through the hole in the door.

Fastener Locations
A ▶ : Screw, 1 B ▶ : Screw, 3

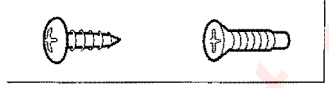

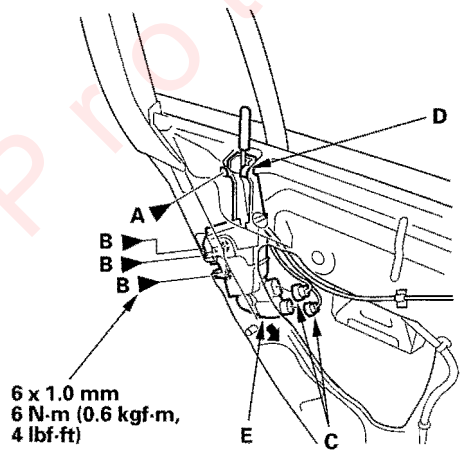

4. Remove the child lock cap (A), and loosen the bolt securing the outer handle holder (B) completely.

Fastener Location
▶ : Bolt, 1

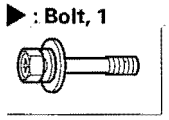

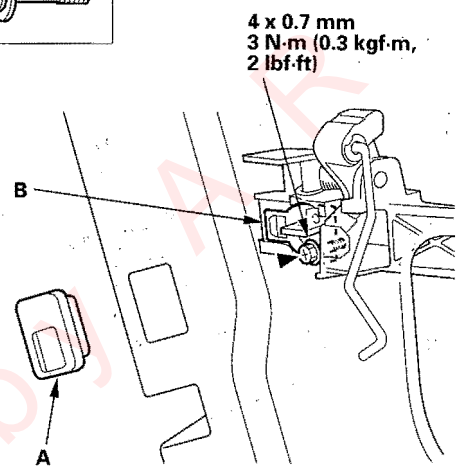

5. Release the hook (A), and then remove the outer handle cover (B).

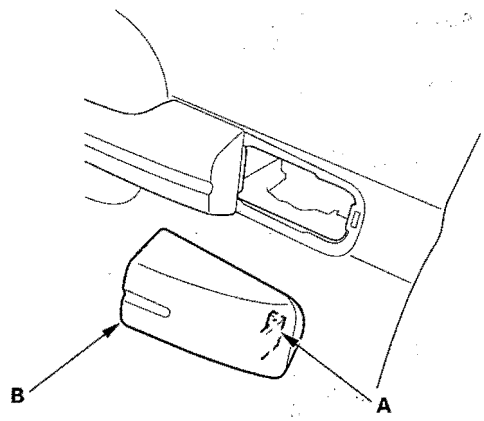

Protected by MAK

6. Pull the pin (A) up while pinching its lower end.

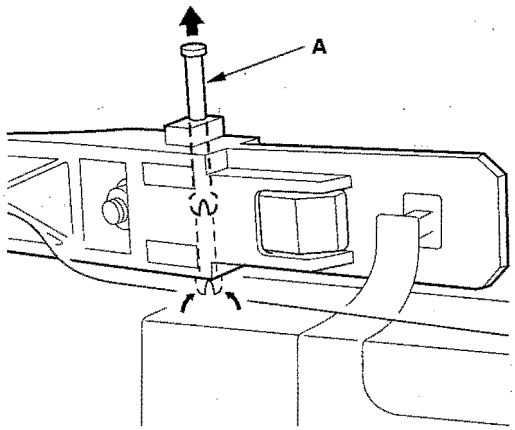

7. Pull the outer handle (A) out, and then back as shown to remove it from the door panel. Take care not to scratch the door.

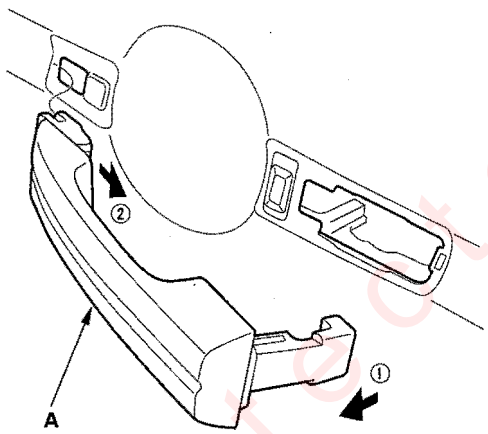

8. Using a long-thin screwdriver through the child lock cap hole, release the tab hooks (A), and remove the outer handle rear seat (B). Release the tab hooks (C), and remove the outer handle front seat (D).

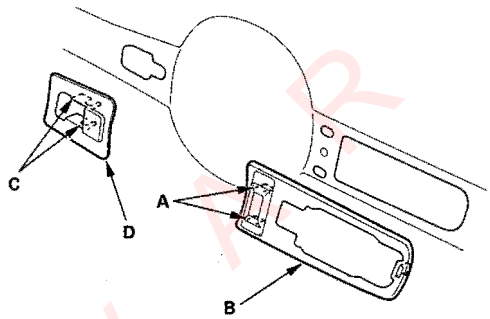

9. Detach the shoulder pad mounting clips.

Fastener Locations
▷: Clip, 2

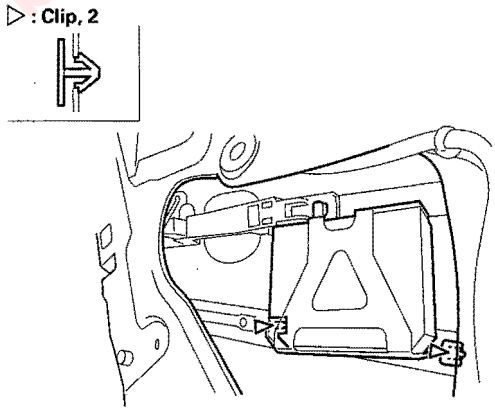

10. Remove the outer handle base (A).

-1 Loosen the nut.
-2 Release the tab (B) and slide the outer handle base forward.

Fastener Location
●: Nut, 1

6 x 1.0 mm
9.8 N·m
(1.0 kgf·m, 7.2 lbf·ft)

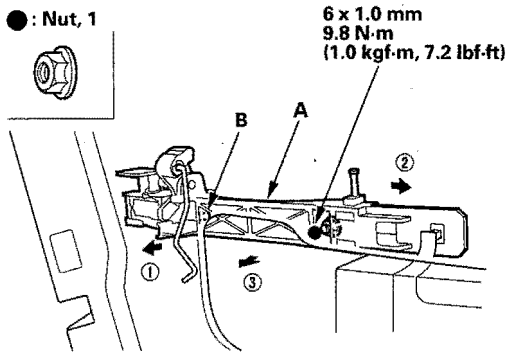

(cont'd)

Protected by ARR

Rear Door Outer Handle Replacement (cont'd)

11. Detach the clip, then remove the shoulder pad (A) from the outer handle base (B).

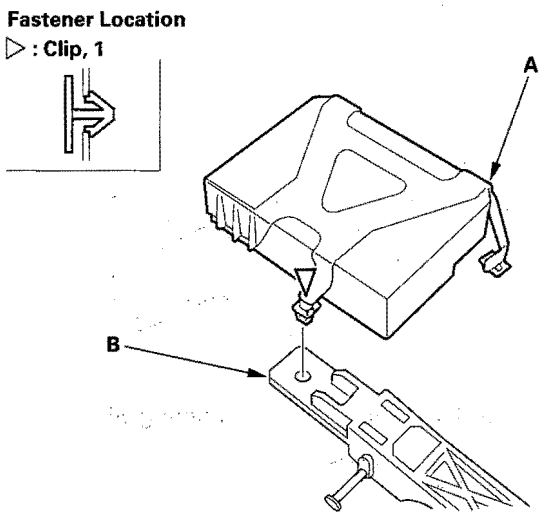

12. Disconnect the outer handle rod (A) from the outer handle base (B).

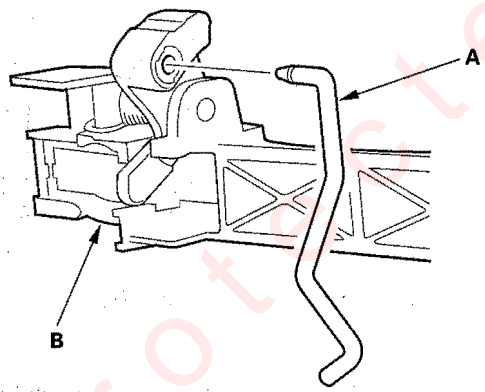

13. Install the handle in the reverse order of removal, and note these items:

    - Make sure the door locks and opens properly.
    - When reinstalling the door panel, make sure the plastic cover is installed properly and sealed around its outside perimeter to prevent water leaks.

Rear Door Latch Replacement

NOTE: Put on gloves to protect your hands.

1. Remove these items:

    - Door panel (see page 20-17)
    - Plastic cover, as necessary (see page 20-5)
    - Rear door glass (see page 20-23)

2. Disconnect the outer handle rod from the latch (see step 2 on page 20-20).

3. Disconnect the actuator connectors (A). Remove the screws (B, C) securing the latch.

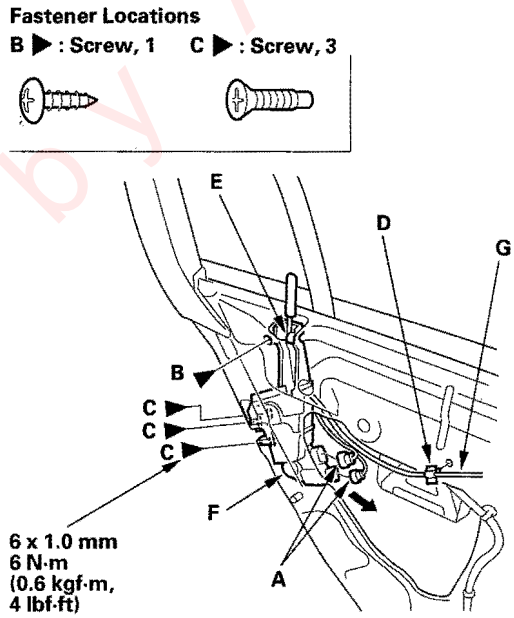

4. Detach the cable clip (D), and release the hook (E), then remove the latch (F) through the hole in the door. Take care not to bend the inner handle cable (G).

Protected by A R

5. Remove the lock rod protector (A) from the latch protector (B) by releasing the hook (C).

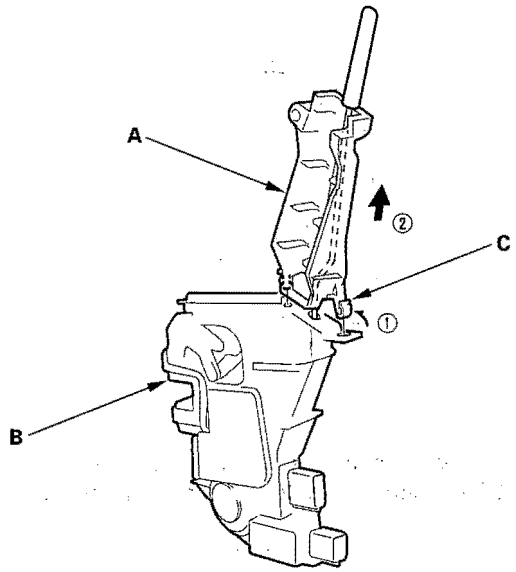

6. Install the latch in the reverse order of removal, and note these items:

   - Make sure the actuator connectors are plugged in properly.
   - Make sure the door locks and the window operates properly.
   - When reinstalling the door panel, make sure the plastic cover is installed properly and sealed around its outside perimeter to prevent water leaks.

Rear Door Glass and Regulator Replacement

NOTE:
- Put on gloves to protect your hands.
- Be careful of sharp edges.

1. Remove these items:

   - Door panel (see page 20-17)
   - Plastic cover, as necessary (see page 20-5)

2. Carefully move the glass (A) until you can see the bolts, through the holes in the door frame, then remove them. Remove the glass from the regulator (B), and carefully lower the glass. Take care not to drop the glass inside the door.

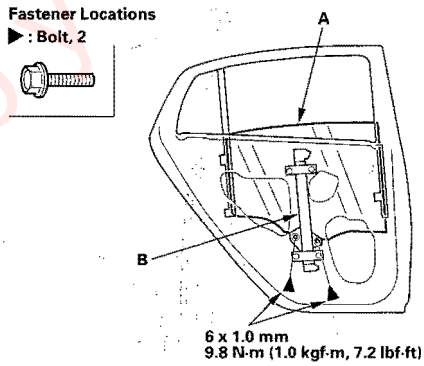

3. Pull the glass run channel (A) away as needed. Pull the door weatherstrip (B) away as needed, then remove the screw (C) with a Torx T15 bit. Remove the bolts (D, E) securing the center channel (F), then remove the collar (G).

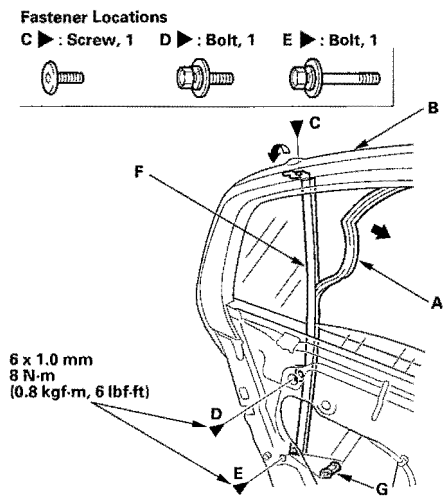

(cont'd)

Protected by AR

Rear Door Glass and Regulator Replacement (cont'd)

4. Pull the upper portion of the center channel (A) forward to remove it from the door quarter glass seal (B), then pull up and remove the center channel through the window slot. Take care not to damage the outer weatherstrip (C).

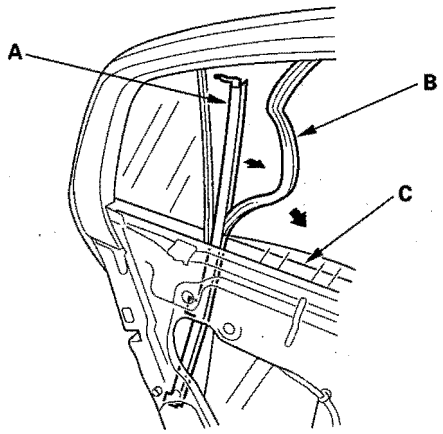

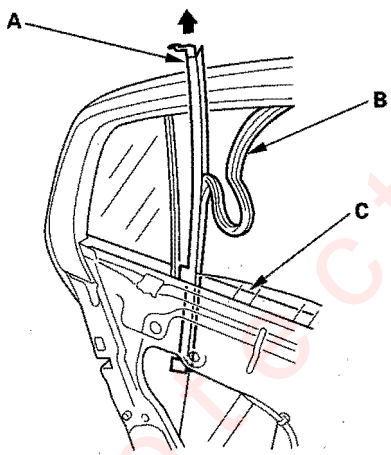

5. Remove the quarter glass (A). Take care not to damage the outer weatherstrip (B).

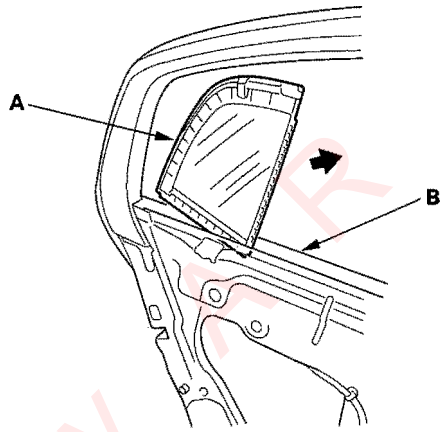

6. Carefully remove the glass (A) through the window slot. Take care not to drop the glass inside the door.

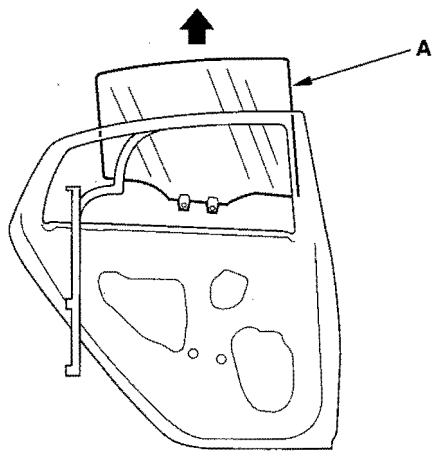

Protected by

7. Disconnect the connector (A) from the regulator (B).

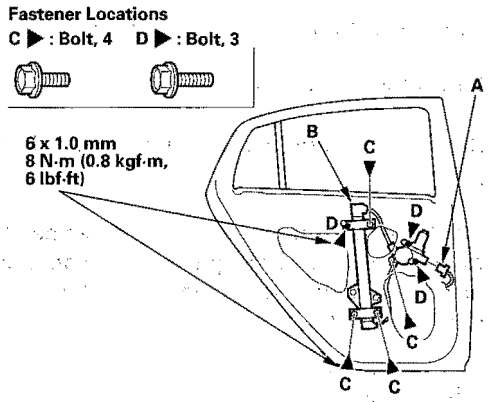

8. Remove the bolts (C), and loosen the bolts (D), then remove the regulator through the hole in the door.

9. Apply multipurpose grease to all the sliding surfaces of the regulator (A) where shown.

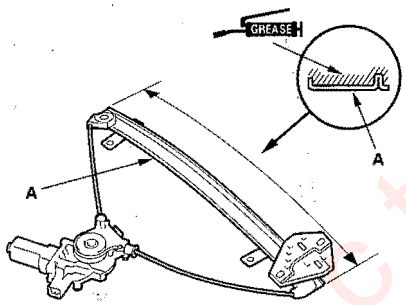

10. Install the glass and regulator in the reverse order of removal, and note these items:

- Special corrosion-resistant bolts are used in this area. The use of any other type of hardware may result in accelerated corrosion.
- Roll the glass up and down to see if it moves freely without binding.
- Make sure that there is no clearance between the glass and glass run channel when the glass is closed.
- Adjust the position of the glass as necessary (see page 20-30).
- Check for water leaks (see step 7 on page 20-30).
- Test-drive and check for wind noise and rattles.
- When reinstalling the door panel, make sure the plastic cover is installed properly and sealed around its outside perimeter to prevent water leaks.

Rear Door Sash Inner Trim Replacement

NOTE: Take care not to scratch the door.

1. Lower the glass fully.
2. Remove the door panel (see page 20-17).
3. Detach the door sash inner trim and weatherstrip mounting clips.

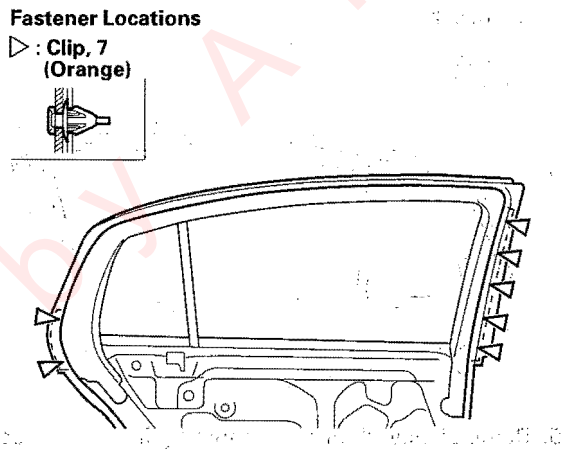

(cont'd)

Rear Door Sash Inner Trim Replacement (cont'd)

4. Remove the door sash inner trim (A).

   -1 Detach the clips.
   -2 While removing the lower edge of the door inner sash trim (A) from the edge of the sash, and release the hook (B), then remove the door sash inner trim.

Fastener Locations
▷ : Clip, 2

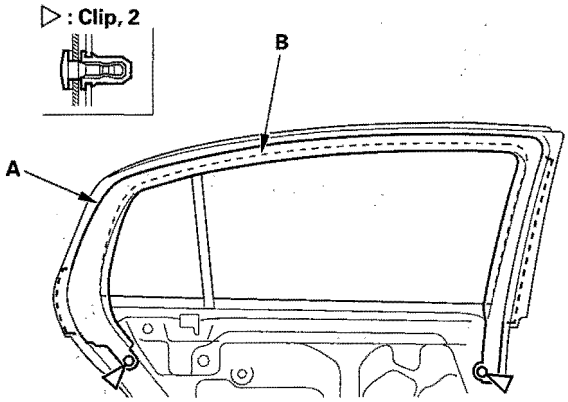

5. Reinstall new door outer molding in the reverse order of removal, and push the clips in to place securely.

Rear Door Sash Outer Trim Replacement

NOTE: Take care not to scratch the door.

1. Lower the glass fully.
2. Remove the door glass outer weatherstrip (see page 20-27).
3. Pull the glass run channel (A) away as needed, and remove the screws (B), pull back the door sash outer trim (C) to release the hook (D) from the door rear edge of the door.

Fastener Locations
B ▶ : Screw, 3

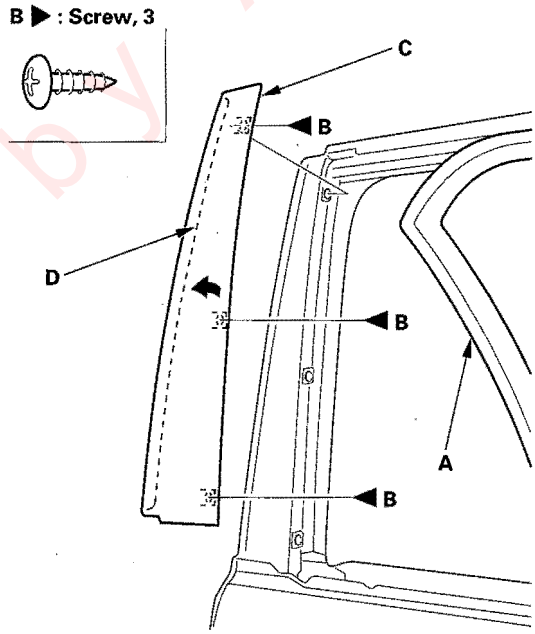

4. Install the trim in the reverse order of removal.

Protected by AR

Rear Door Glass Outer Weatherstrip Replacement

NOTE:
- Once you remove the door glass outer weatherstrip, replace it with a new one because it will bend during removal.
- Put on gloves to protect your hands.
- Take care not to scratch the door.

1. Remove the door panel (see page 20-17).

2. Remove corner portion of the weatherstrip (see page 20-29).

3. Remove the screw and sealing washer from the front edge of the door.

Fastener Location
▶ : Screw, 1

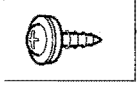

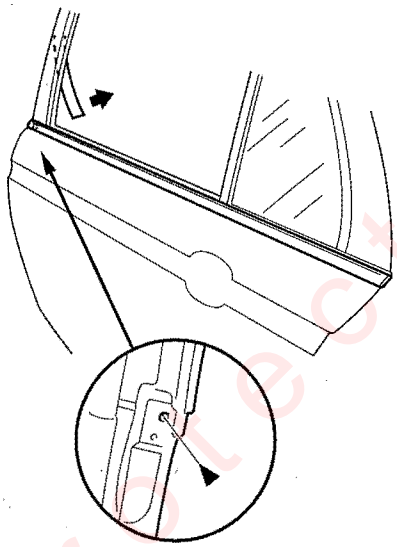

4. Starting at the front, pull the door glass outer weatherstrip (A) up at each portion where the inner molding (B) catches the inside edge of the window slot. Take care not to bend the door outer molding (C).

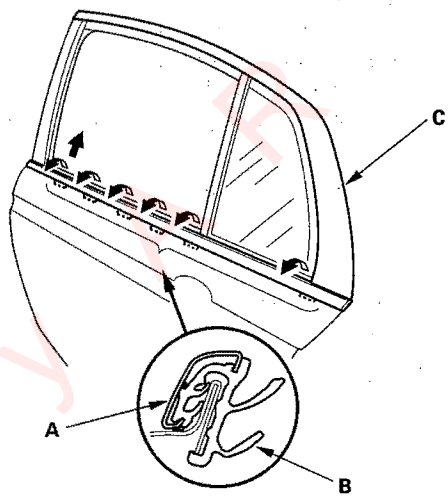

5. First slide the door glass outer weatherstrip (A) forward slightly, detach the rear clip (B) by pulling the front of the weatherstrip up, then slide the weatherstrip forward to remove it.

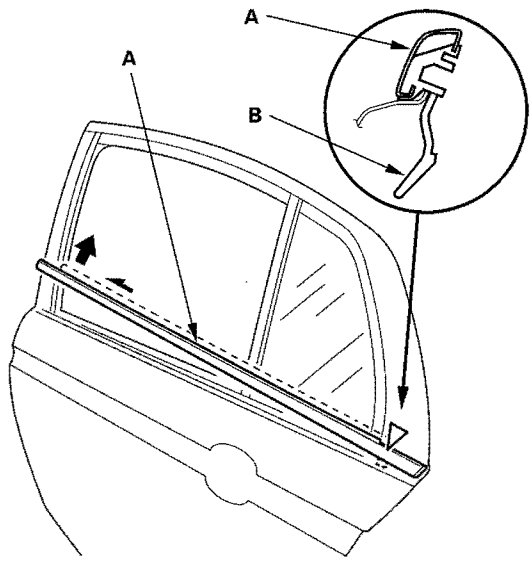

6. Install a new weatherstrip in the reverse order of removal.

Protected by

Rear Door Outer Molding Replacement

Special Tools Required
KTC trim tool set SOJATP2014

NOTE:
- Once you remove the door outer molding, replace it with a new one because it will bend during removal.
- Put on gloves to protect your hands.
- Take care not to scratch the door.
- Use the appropriate tool from the KTC trim tool set to avoid damage when pryingcomponents.

1. Remove the quarter glass (see page 20-23).

2. Remove the screws.

Fastener Locations
▶ : Screw, 2

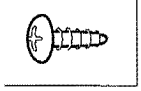

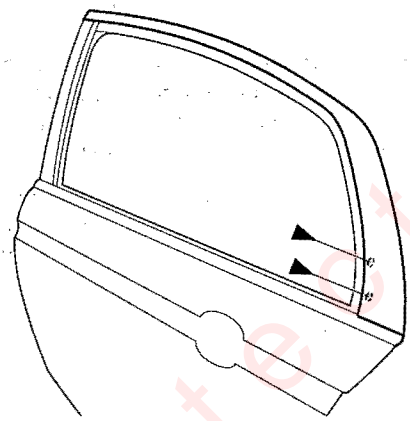

3. Pry the front clips with the appropriate tool from the KTC trim tool set.

Fastener Locations
▷ : Clip, 2

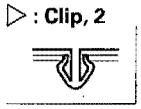

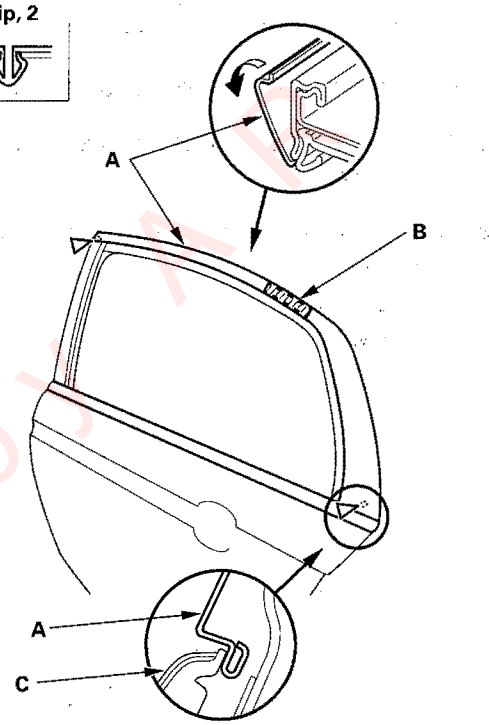

4. While removing the upper edge of the door outer molding (A) from the edge of the sash, cut the double-sided adhesive tape (B) with a utility knife, then remove the molding.

5. Scrape the remaining double-sided adhesive tape from the sash, then clean the sash surface with a sponge dampened in alcohol.

6. Install a new door outer molding in the reverse order of removal, and note these items:

   - Push the clips and the adhesive portions into place securely.
   - Make sure the upper and lower sides of the molding are catching the edges of the sash properly.
   - Make sure the lower end to the door outer molding is under the door glass outer weatherstrips (C).

Protected by AP

Rear Door Weatherstrip Replacement

NOTE:
- Take care not to scratch the door.
- Use a clip remover to remove the clips.

1. At the B-pillar, remove the door checker mounting bolt (A).

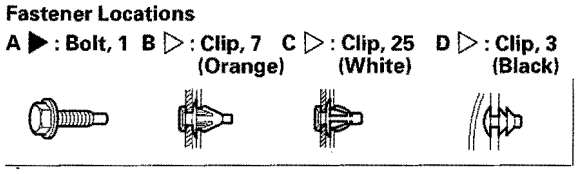

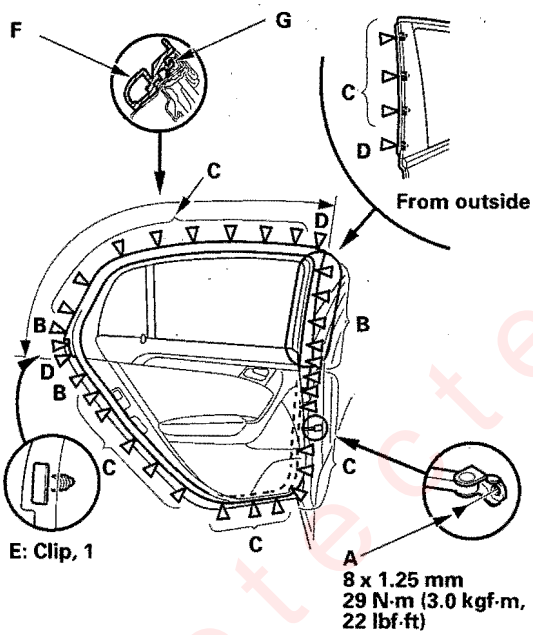

2. Detach the clips (C, D, E), then remove the door weatherstrip (F).

3. Install the weatherstrip in the reverse order of removal, and note these items:

   - Replace any damaged clips.
   - Make sure the weatherstrip is installed in the holder (G) securely.
   - Apply liquid thread lock to the door checker mounting bolt before installation.
   - Check for water leaks (see step 7 on page 20-30).

Rear Door Hook Pin and Catch Replacement

1. With a Torx T40 bit, remove the door hook pin (A) from the door.

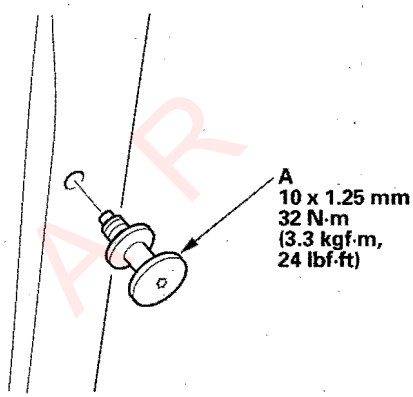

2. With a Torx T40 bit, remove the bolts, then remove the door catch (A) from the body.

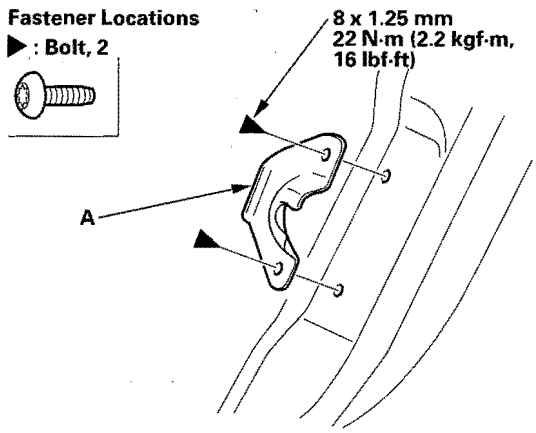

3. Install the hook pin and catch in the reverse order of removal, and apply liquid thread lock to the threads of the door hook pin.

Protected by AR

Front and Rear Door Glass Adjustment

NOTE:
- Check the weatherstrips and glass run channel for damage or deterioration, and replace them if necessary.
- Wipe the run channel clean with a shop towel.
- Lubricate the run channel with Shin-Etsu silicone grease P/N 08798-9013.

1. Place the vehicle on a firm, level surface.

2. Remove these items:
   - Door panel, front door (see page 20-7), rear door (see page 20-17)
   - Plastic cover, front door (see page 20-3), rear door (see page 20-5)

3. Carefully move the glass (A) until you can see the glass mounting bolts (B), then loosen them.

Front door

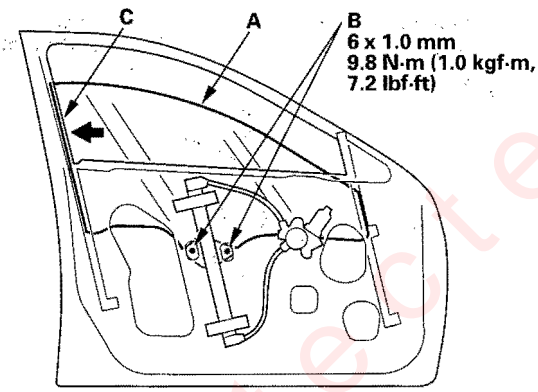

Rear door

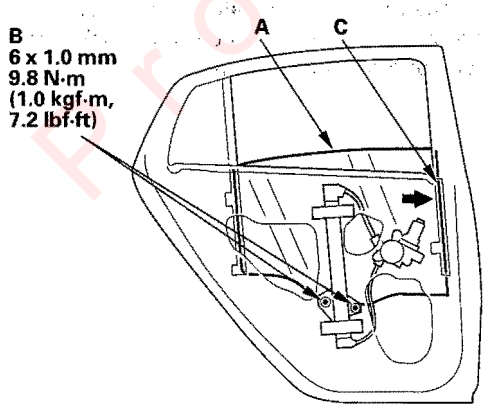

4. Push the glass against the channel (C), then tighten the glass mounting bolts.

5. Make sure that the glass moves smoothly.

6. Raise the glass fully, and check for gaps. Also check that the glass (A) contacts the glass run channel (B) evenly.

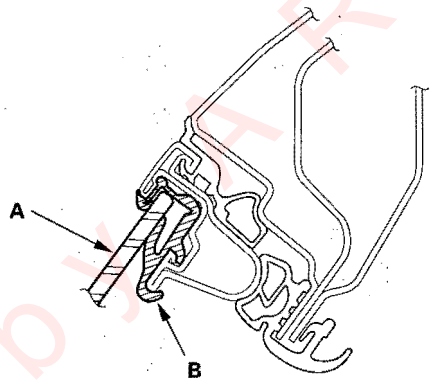

7. Check for water leaks. Run water over the roof and on the sealing area as shown, and note these items:
   - Use a 12 mm (0.47 in.) diameter hose (A).
   - Adjust the rate of water flow as shown (B).
   - Do not use a nozzle.
   - Hold the hose about 300 mm (12 in.) away from the door (C).

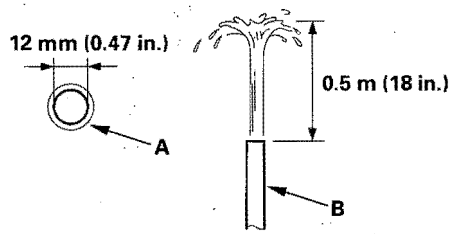

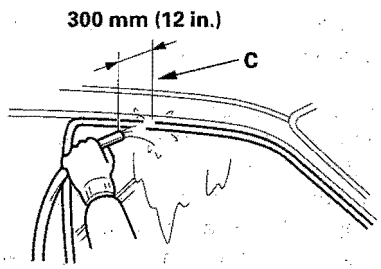

8. Attach the plastic cover, and install the door panel, front door (see page 20-7), rear door (see page 20-17).

Protected by AR

Front and Rear Door Position Adjustment

SRS components are located in the B-pillar bottom area. Review the SRS component locations (see page 23-11) and the precautions and procedures (see page 23-13) before performing repairs or service.

NOTE: Check for a flush fit with the body, then check for equal gaps between the front, rear, and bottom door edges and the body. Check that the door and body edges are parallel.

1. Place the vehicle on a firm, level surface when adjusting the doors.

2. Adjust at the hinges (A):

   - Place a shop towel (B) on the jack (C) to prevent damage to the door when adjusting it.
   - On the front door: Remove the front inner fender (see page 20-142) and front fender fairing (see page 20-144). Loosen the hinge mounting bolts (D) slightly, and move the door backward or forward.
   - On the rear door: Remove the B-pillar lower trim (see page 20-62) and remove the front seat belt and retractor (see page 23-4), and the plug seal from the body. Loosen the hinge mounting nuts (E) slightly, and move the door backward or forward, up or down as necessary to equalize the gaps.

Front door

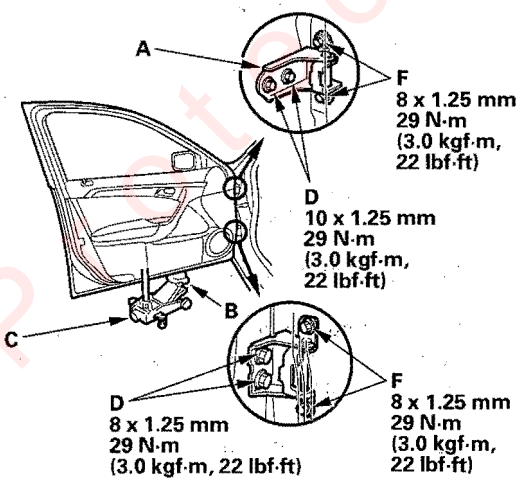

Rear door

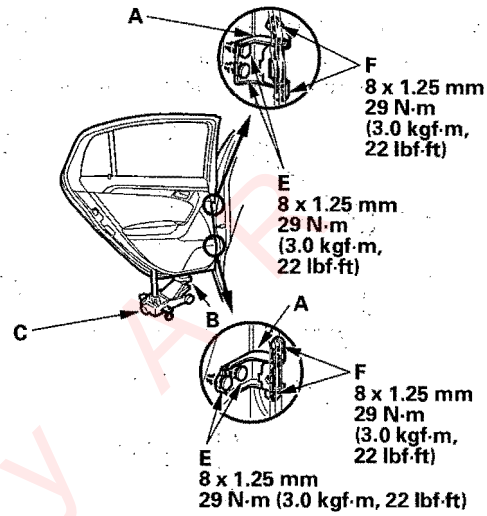

3. If necessary, replace the door mounting bolts with the adjusting bolts (P/N 90102-SFA-305) made specifically for door adjustment, then adjust at the door: Loosen the door mounting bolts (F) slightly, and move the door up or down as necessary to equalize the gaps, and in or out until it's flush with the body.

(cont'd)

Protected by AP

Front and Rear Door Position Adjustment (cont'd)

4. Make sure that the door and body edges are parallel. If necessary, adjust the door cushion (A) to make the rear of the doors flush with the body.

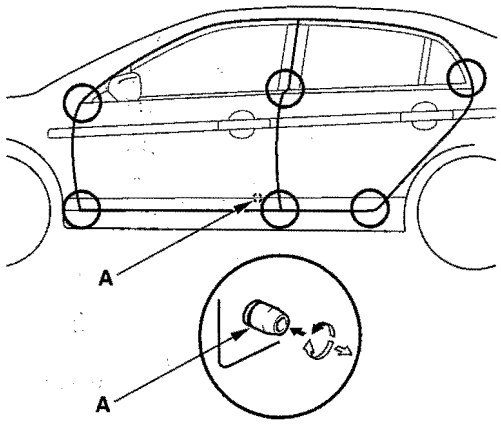

5. Apply touch-up paint to the hinge mounting bolts, and around the hinges.

6. Check for water leaks (see step 7 on page 20-30).

Front and Rear Door Striker Adjustment

Make sure the door latches securely without slamming it. If necessary, adjust the striker (A): The striker can be adjusted slightly up or down, and in or out.

1. Release the hooks (B), then remove the striker trim (C).

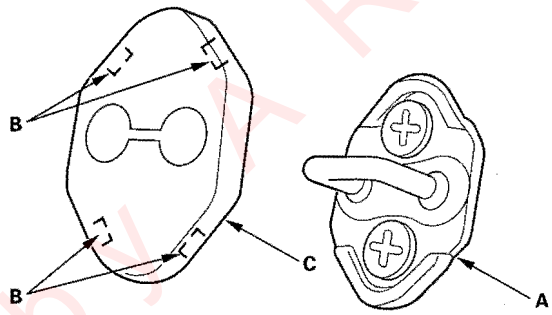

2. Loosen but do not remove the screws (A), then insert a shop towel (B) between the body and striker (C).

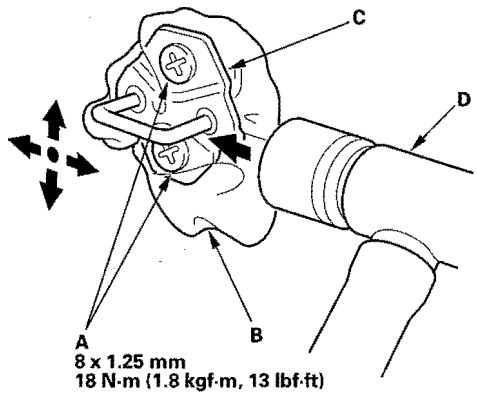

3. Lightly tighten the screws.

4. Wrap the striker with a shop towel, then adjust the striker by tapping it with a plastic hammer (D). Do not hit the striker too hard.

5. Loosen the screws, and remove the shop towel.

6. Lightly tighten the screws.

7. Hold the outer handle out, and push the door against the body to be sure the striker allows a flush fit. If the door latches properly, tighten the screws and recheck.

Protected by AR

Component Location Index

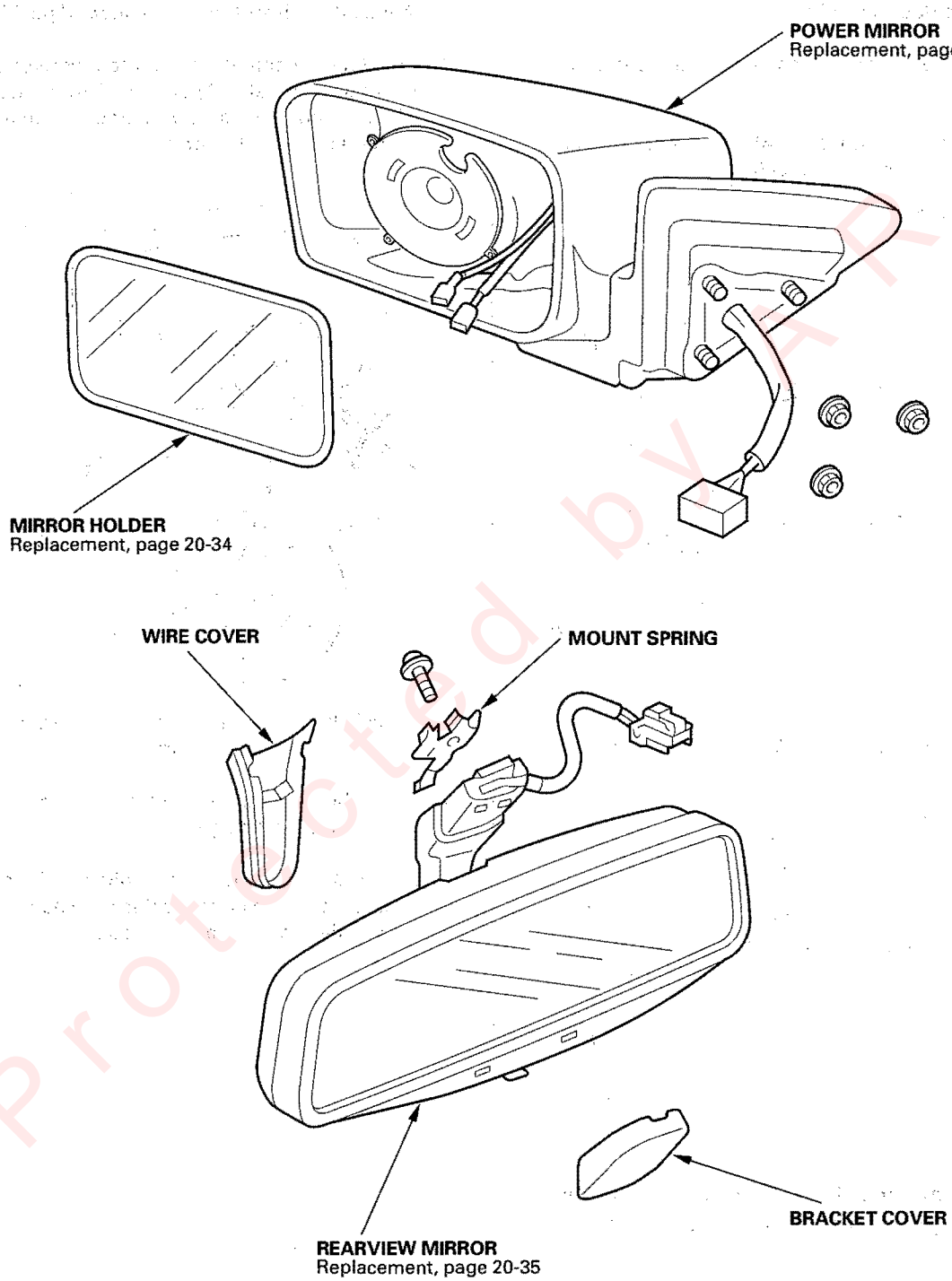

Protected by ARR

Power Mirror Replacement

1. Lower the door glass fully.
2. Remove the front door sash inner trim (see page 20-14).
3. Disconnect the connector (A). While holding the mirror (B), remove the nuts (C).

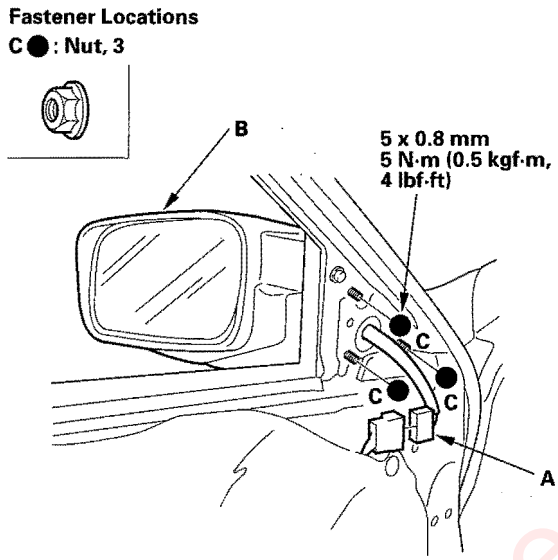

4. Remove the mirror (A). Take care not to scratch the door.

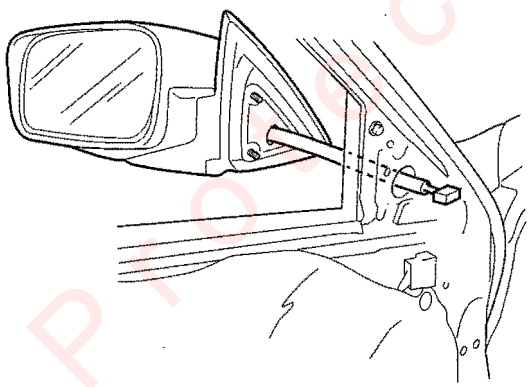

5. Install the mirror in the reverse order of removal, and make sure the connector is plugged in properly.

Mirror Holder Replacement

1. Adjust the mirror fully to the inward position.
2. Insert a long, thin flat-tipped screwdriver between the alignment tabs (A) on the mirror holder (B). Slide the tip of the screwdriver between the mirror holder and the actuator (C).

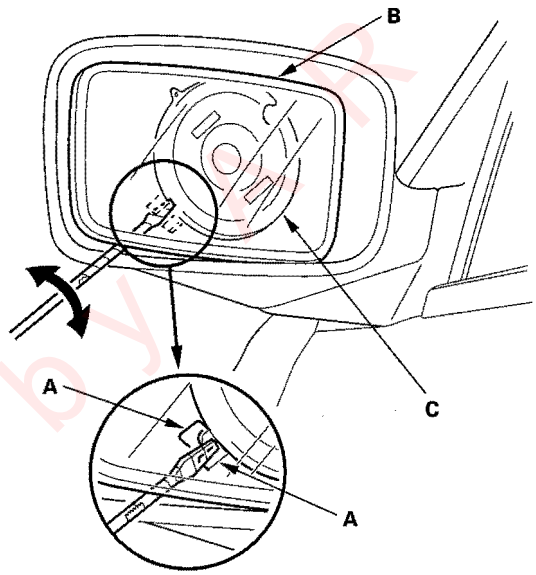

3. Quickly twist the screwdriver to separate the mirror holder from the mirror actuator.
4. Insert the screwdriver further under the mirror holder and twist it again.

   NOTE: Do not pry up on the mirror holder to separate the two parts, as this can cause either the mirror glass or actuator to break.

Protected by DOR

5. Separate the mirror holder (A) from the actuator (B). Disconnect the mirror defogger connectors (C) from the heater pad terminals.

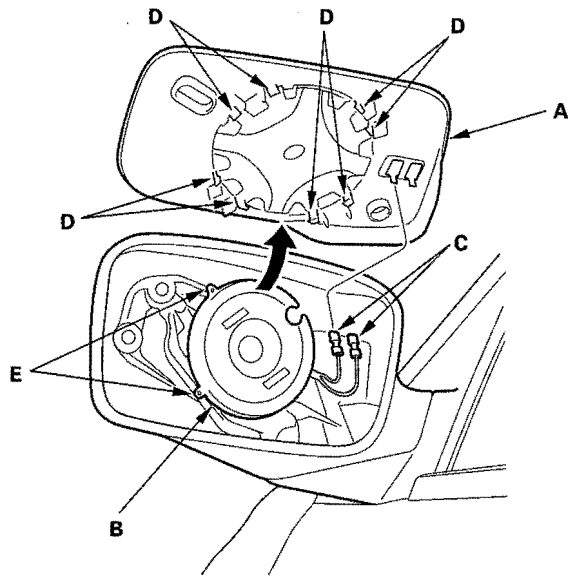

6. Reconnect the mirror defogger connector.

7. Align the tabs (D) on the mirror holder so they line up on each side of the actuator tabs (E). Carefully push on the mirror holder until it locks into place.

8. Check the operation of the actuator.

Rearview Mirror Replacement

Special Tools Required
KTC trim tool set SOJATP2014

NOTE:
- Use the appropriate tool from the KTC trim tool set to avoid damage when prying components.

1. Remove the roof console (see step 5 on page 20-71).

2. Disconnect the connector (A), and carefully remove the bracket cover (B) by releasing the hooks (C). Take care not to scratch the cover and mirror bracket (D).

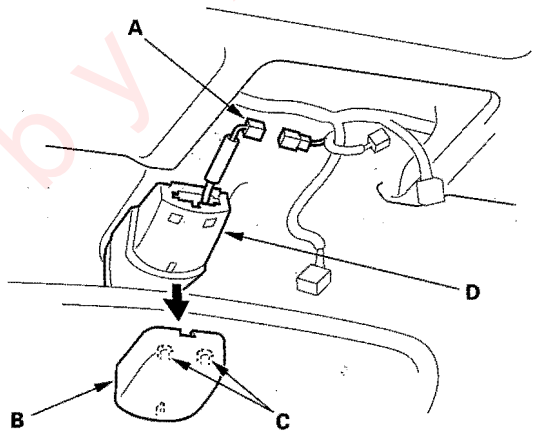

3. Slide the rearview mirror (A) forward to release the spring (B) by gently tapping the mirror bracket with a flat-tip screwdriver wrapped with a clean shop towel and a plastic hammer.
Remove the mirror from the lug (C).

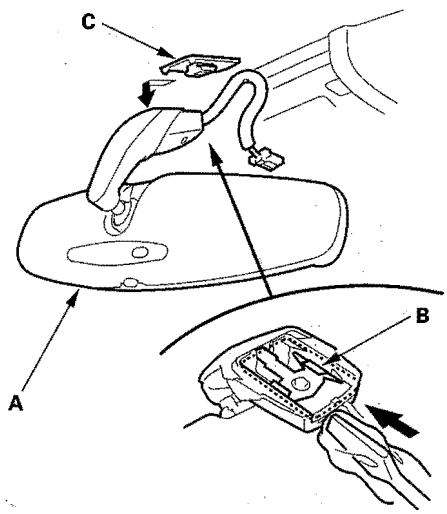

(cont'd)

Protected by APR

Rearview Mirror Replacement (cont'd)

4. Remove the wire cover (A) from the mirror bracket (B) by releasing the hooks (C) in the sequence shown.

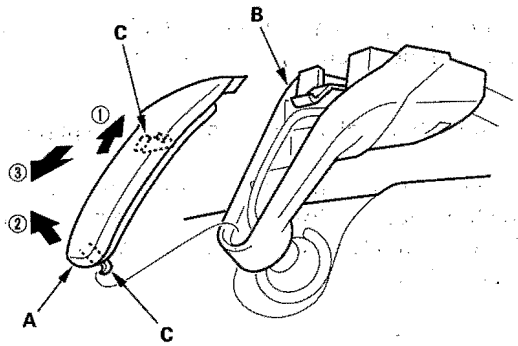

5. Install the rearview mirror (A) by sliding it over the lug (B) until the spring contacts the lug. Gently tap the mirror bracket with a flat-tip screwdriver wrapped with a clean shop towel and a plastic hammer. Be careful not to damage the wires.

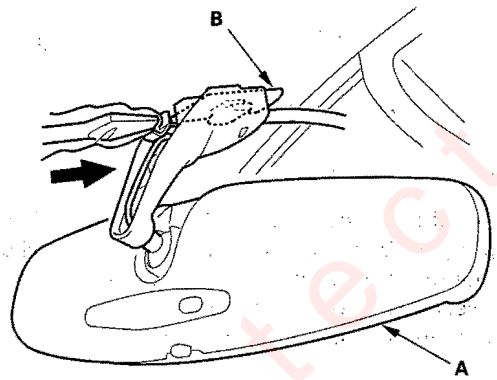

6. Install the wire cover (A) in the sequence shown. Take care not to damage the hooks (B).

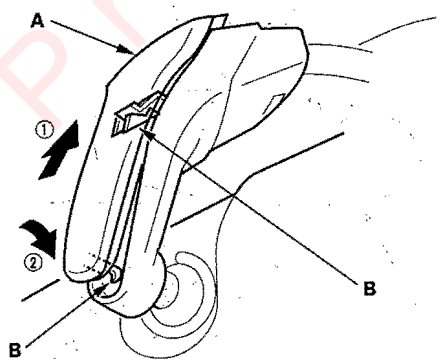

7. Install the bracket cover, and connect the connector, then install the roof console.

Protected by AR

Component Location Index

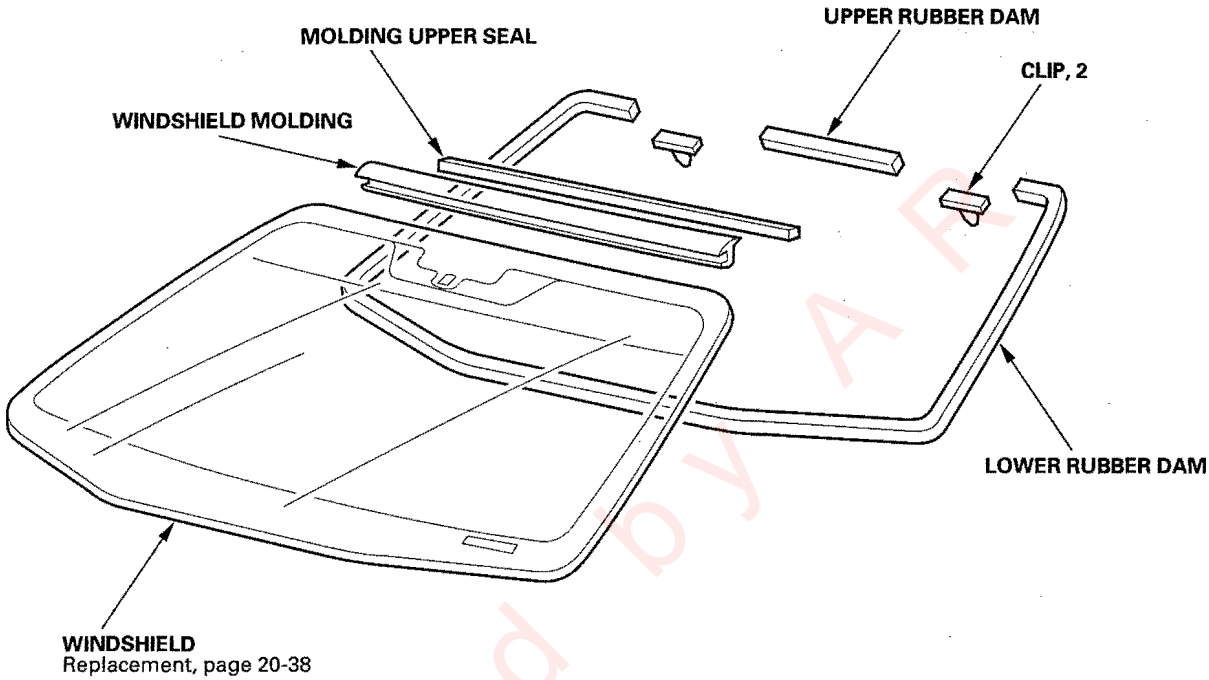

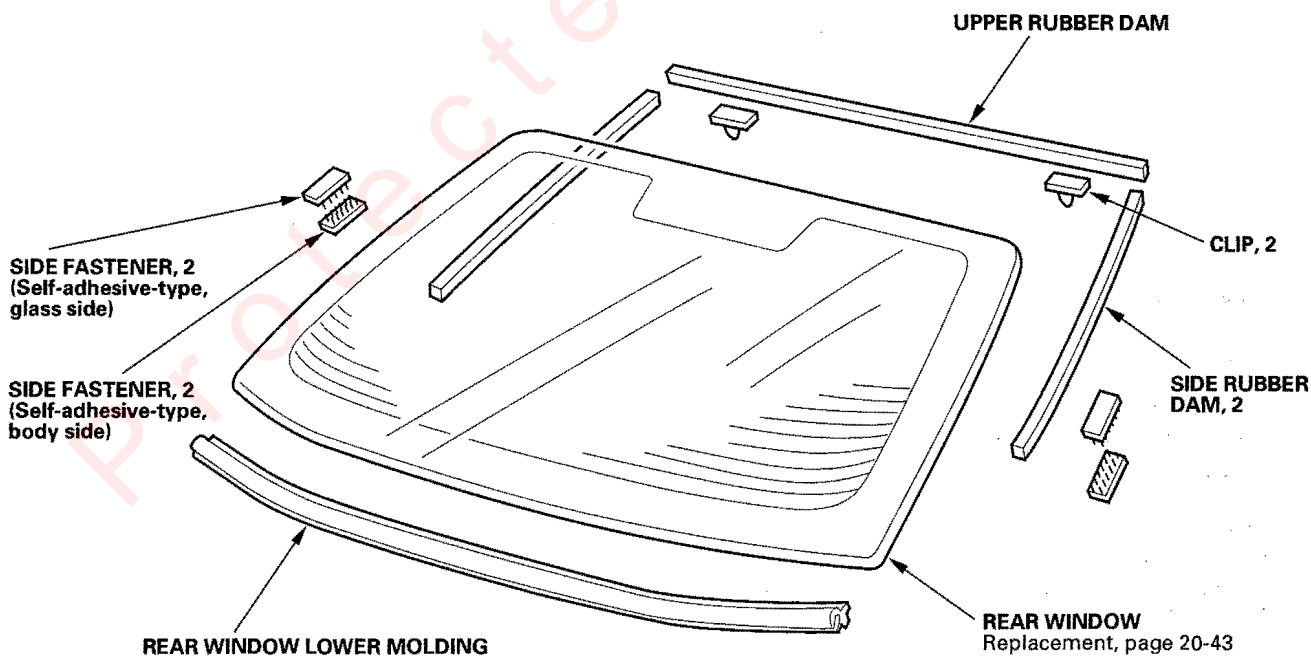

Protected by A R

Windshield Replacement

NOTE:
- Put on gloves to protect your hands.
- Wear eye protection while cutting the glass adhesive with piano wire.
- Cover interior surfaces to avoid damaging them.

1. Remove these items:
   - Windshield wiper arms (see page 22-251)
   - Cowl covers (see page 20-132)
   - Rearview mirror (see page 20-35)
   - Front pillar trim (see page 20-62)
   - Roof molding (see page 20-134)

2. Remove the molding (A) from the upper edge of the windshield (B). If necessary, cut the molding with a utility knife.

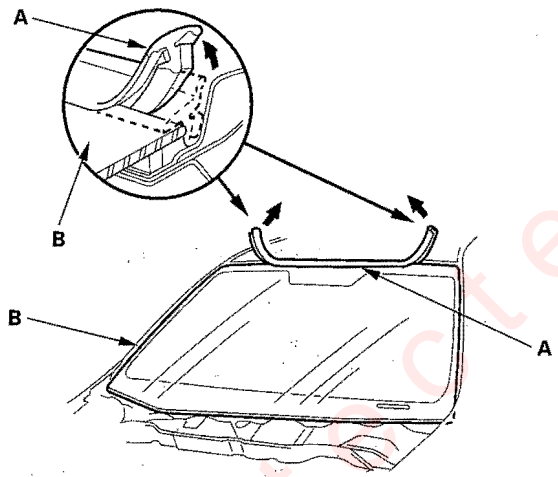

3. If the old windshield will be reinstalled, make alignment marks across the glass and body with a grease pencil.

4. Pull down the front portion of the headliner (see page 20-70). Take care not to bend the headliner excessively, or you may crease or break it.

5. Apply protective tape along the edge of the dashboard and body. Using an awl, make a hole through the rubber dam and adhesive from inside the vehicle at the corner portion of the windshield. Push a piece of piano wire through the hole, and wrap each end around a piece of wood.

6. With a helper on the outside, pull the piano wire (A) back and forth in a sawing motion. Hold the piano wire as close to the windshield (B) as possible to prevent damage to the body and dashboard. Carefully cut through the rubber dam and adhesive (C) around the entire windshield.

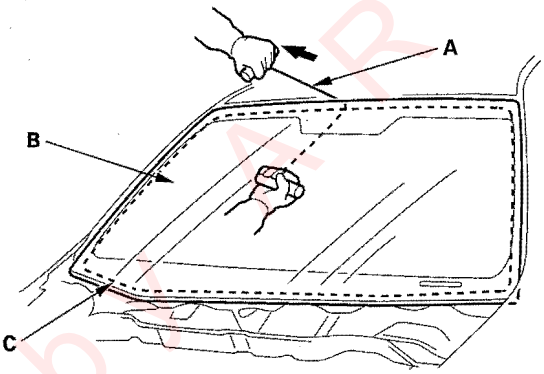

Cutting positions

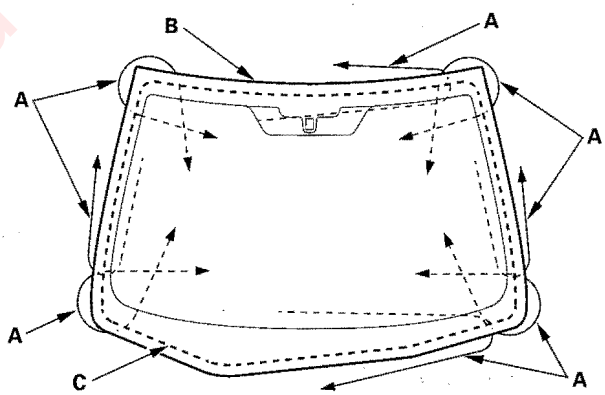

7. Carefully remove the windshield.

Protected by AR

8. With a knife, scrape the old adhesive smooth to a thickness of about 2 mm (0.08 in.) on the bonding surface around the entire windshield opening flange:

   - Do not scrape down to the painted surface of the body; damaged paint will interfere with proper bonding.
   - Remove the rubber dam and fasteners from the body.
   - Replace the dashboard seal with a new one.

9. Clean the body bonding surface with a sponge dampened in alcohol. After cleaning, keep oil, grease and water from getting on the clean surface.

10. If the old windshield will be reinstalled, use a putty knife to scrape off all of the old adhesive, the fasteners and the rubber dam. Clean the inside face and the edge of the windshield with alcohol where new adhesive will be applied. Make sure the bonding surface is kept free of water, oil and grease.

11. Attach the upper rubber dam (A), lower rubber dam (B) with adhesive tape A, and clips (C) with adhesive tape B to the inside face of the windshield (D) as shown:

    - Be sure the rubber dam and clips line up with the alignment marks (E).
    - Be careful not to touch the windshield where adhesive will be applied.

Adhesive tape A: Thickness 0.16 mm (0.006 in.)
Adhesive tape B: Thickness 0.4 mm (0.02 in.)
Width 10 mm (0.39 in.)

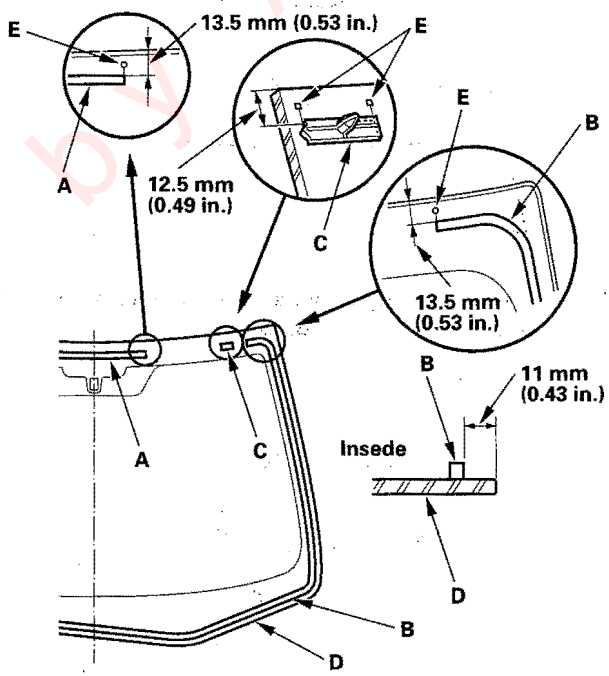

(cont'd)

Protected by AR

Windshield Replacement (cont'd)

12. Attach the molding (A) with adhesive tape (B) to the upper edge of the windshield (C). Be careful not to touch the windshield where adhesive will be applied.

Adhesive tape: Thickness 0.8 mm (0.03 in.)
Width 4 mm (0.2 in.)

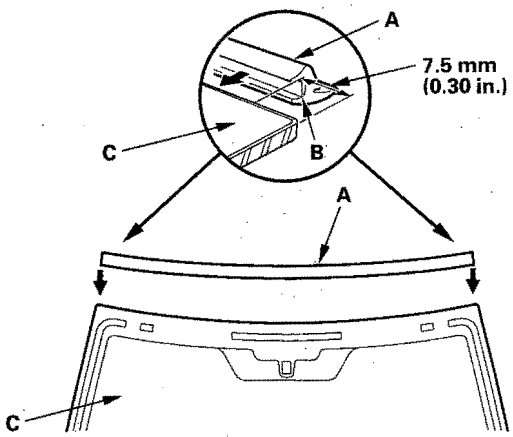

13. Attach the molding upper seal (A) to the inside surface of the molding (B) as shown.

: **Apply primer here.**

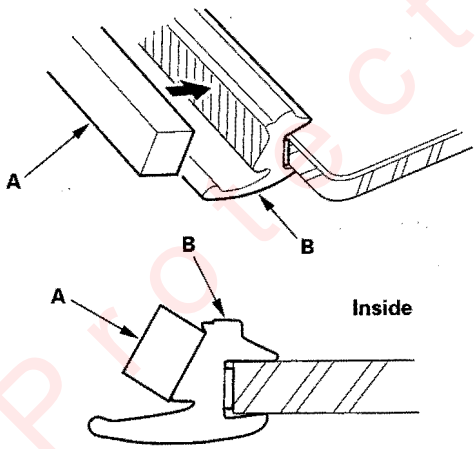

14. Set the windshield in the opening, and center it. Make alignment marks (A) across the windshield and body with a grease pencil at the four points shown. Make sure both clips (B) contact the edge of the body holes. Be careful not to touch the windshield where adhesive will be applied.

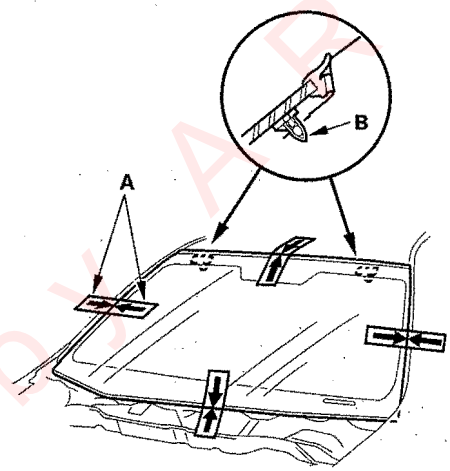

15. Remove the windshield.

Protected by AB

16. With a sponge, apply a light coat of glass primer around the edge of the windshield (A) between the dams (B) and molding (C) as shown, then lightly wipe it off with gauze or cheesecloth:

- Apply glass primer to the molding.
- Do not apply body primer to the windshield, and do not get body and glass primer sponges mixed up.
- Never touch the primed surfaces with your hands. If you do, the adhesive may not bond to the windshield properly, causing a leak after the windshield is installed.
- Keep water, dust, and abrasive materials away from the primed surfaces.

: **Apply glass primer here.**

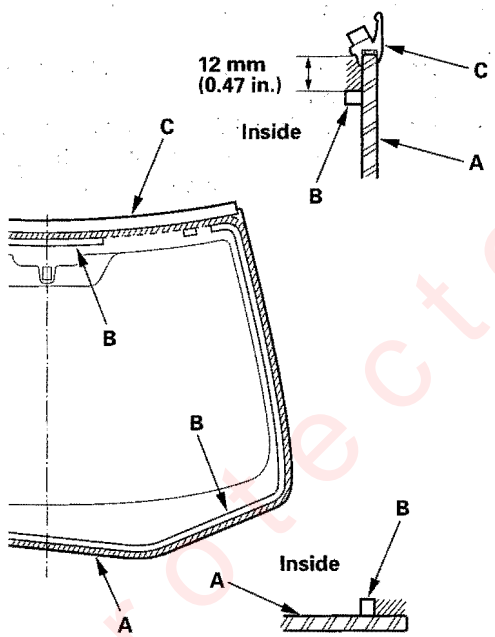

17. With a sponge, carefully apply a light coat of body primer to any exposed point around the flange where new adhesive will be applied. Let the primer dry for at least 10 minutes:

- Do NOT apply body primer to any remaining original adhesive on the flange.
- Be careful not to mix up the body and glass primer sponges.
- Never touch the primed surfaces with your hands.

: **Apply body primer to exposed paint here.**

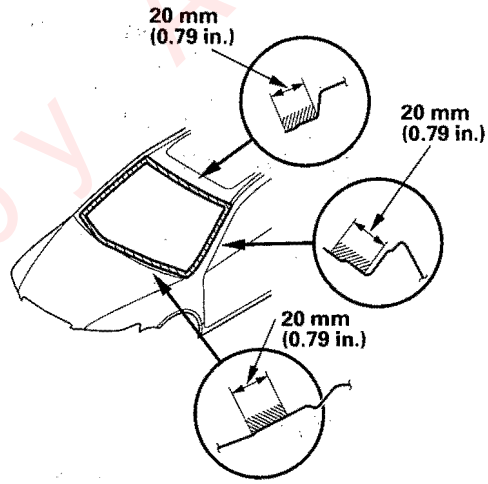

18. Cut a "V" in the end of the nozzle (A) on the adhesive cartridge as shown.

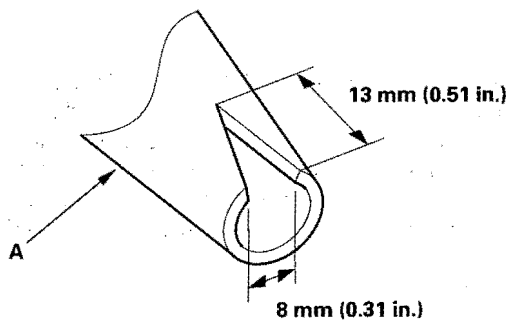

(cont'd)

Protected by A R

Windshield Replacement (cont'd)

19. Put the cartridge in a caulking gun, and run a bead of adhesive (A) around the edge of the windshield (B) between the dams (C) and molding (D) as shown. Apply the adhesive within 30 minutes after applying the glass primer. Make a slightly thicker bead at each corner.

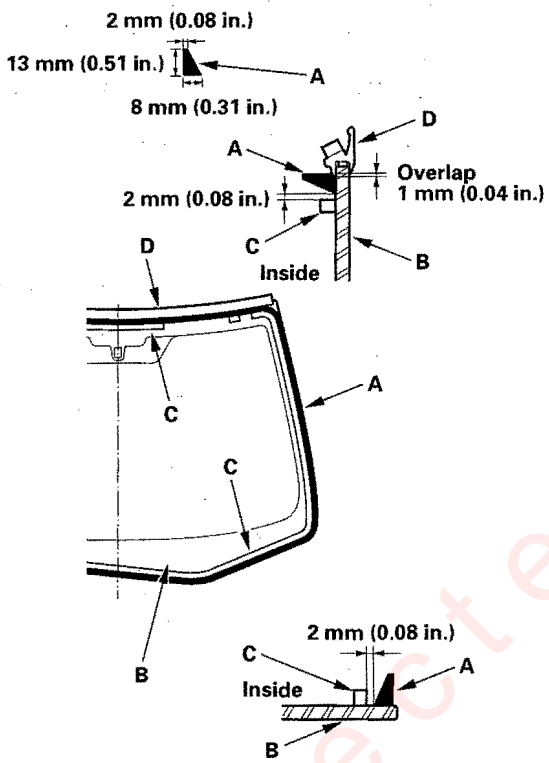

20. Use suction cups to hold the windshield over the opening, align it with the alignment marks made in step 14, and set it down on the adhesive. Lightly push on the windshield until its edges are fully seated on the adhesive all the way around. Do not open or close the doors until the adhesive is dry.

21. Scrape or wipe any excess adhesive off with a putty knife or towel. To remove adhesive from a painted surface or the windshield, wipe with a soft shop towel dampened with alcohol.

22. Let the adhesive dry for at least 1 hour, then spray water over the windshield and check for leaks. Mark leaking areas, and let the windshield dry, then seal with sealant:

    - Let the vehicle stand for at least 4 hours after windshield installation. If the vehicle has to be used within the first 4 hours, it must be driven slowly.
    - Keep the windshield dry for the first hour after installation.

23. Reinstall all remaining removed parts.

    NOTE: Advise the customer not to do the following things for 2 to 3 days:
    - Slam the doors with all the windows rolled up.
    - Twist the body excessively (such as when going in and out of driveways at an angle or driving over rough, uneven roads).

Protected by AR

Rear Window Replacement

NOTE:
- Put on gloves to protect your hands.
- Wear eye protection while cutting the glass adhesive with piano wire.
- Cover interior surfaces to avoid damaging them.
- Do not damage the rear window defogger grid lines, window antenna grid lines, and terminals.

1. Remove these items:
   - Trunk lid
   - Rear shelf (see page 20-66)
   - High mount brake light (see page 22-194)

2. Disconnect the window antenna connectors (A) and rear window defogger connectors (B).

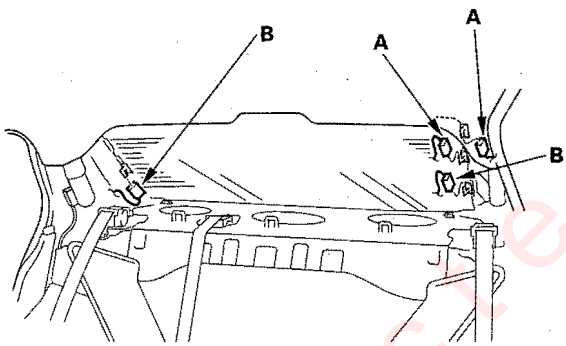

3. If the old rear window will be reinstalled, make alignment marks across the glass and body with a grease pencil.

4. Pull down the rear portion of the headliner (A) by detaching the clips (B). Take care not to bend the headliner excessively, or you may crease or break it.

Fastener Locations
B ▷ : Clip, 2



5. Apply protective tape along the inside and outside edges of the body. Using an awl, make a hole through the adhesive from inside the vehicle at the corner portion of the rear window. Push a piece of piano wire through the hole, and wrap each end around a piece of wood.

(cont'd)

Protected by AR

Rear Window Replacement (cont'd)

6. Remove the molding (A) from the lower edge of the rear window (B). If necessary, cut the molding with a utility knife.

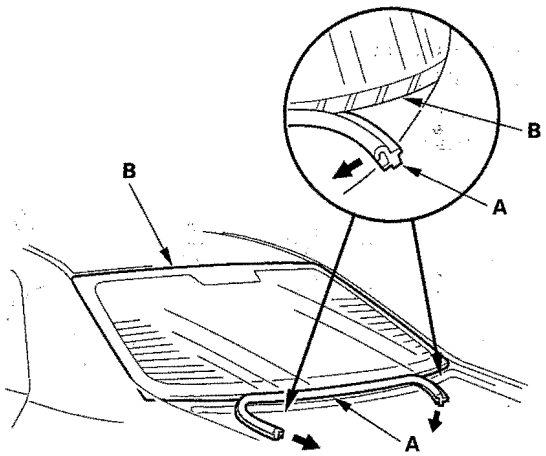

7. With a helper on the outside, pull the piano wire (A) back and forth in a sawing motion. Hold the piano wire as close to the rear window (B) as possible to prevent damage to the body, and carefully cut through the adhesive (C) around the entire rear window.

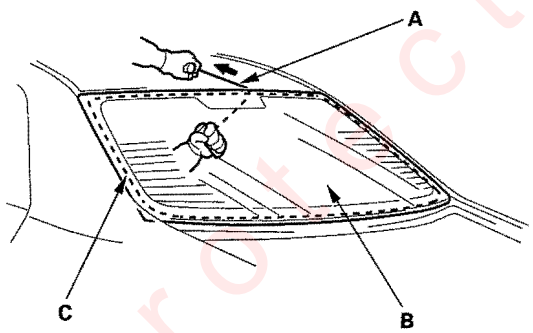

Cutting positions

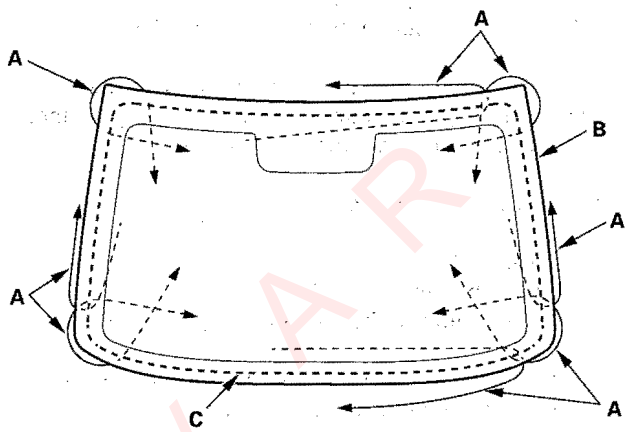

8. Carefully remove the rear window.

9. With a putty knife, scrape the old adhesive smooth to a thickness of about 2 mm (0.08 in.) on the bonding surface around the entire rear window opening flange:

   - Do not scrape down to the painted surface of the body; damaged paint will interfere with proper bonding.
   - Remove the fasteners from the body.

10. Clean the body bonding surface with a sponge dampened in alcohol. After cleaning, keep oil, grease and water from getting on the surface.

11. If the old rear window will be reinstalled, use a putty knife to scrape off all of the old adhesive, the moldings and the fasteners from the rear window. Clean the inside face and the edge of the rear window with alcohol where new adhesive will be applied. Make sure the bonding surface is kept free of water, oil and grease.

Protected by A R

12. Attach the upper rubber dams (A), side rubber dam (B) with adhesive tape A, clips (C) with adhesive tape B, and fasteners (D) with adhesive tape C to the inside face of the rear window (E) as shown:

- First attach the upper rubber dam, then attach the side rubber dams around the edge of the rear window. Be sure top of the side rubber dam contacts with bottom of the upper rubber dam. If necessary, cut the rubber dam.
- Be sure the side rubber dam, clips, and fasteners line up with the alignment marks (F).
- Be careful not to touch the windshield where adhesive will be applied.

Adhesive tape A: **Thickness 0.16 mm (0.006 in.)**
Adhesive tape B: **Thickness 0.4 mm (0.02 in.)**
Width 10 mm (0.39 in.)
Adhesive tape C: **Thickness 0.8 mm (0.03 in.)**
Width 7 mm (0.3 in.)

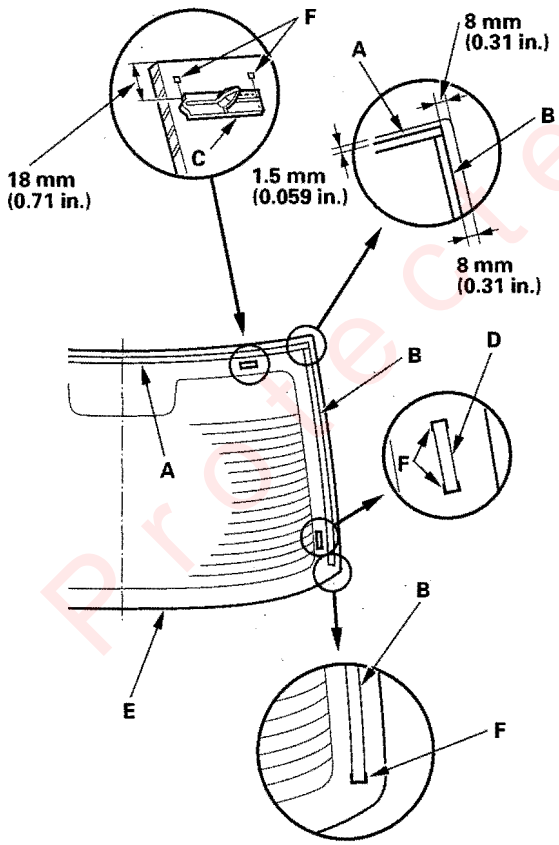

13. Attach the molding (A) with adhesive tape (B) to the lower edge of the rear window (C):

- After installing the molding, cut the ends (D) of the molding as shown.
- Be careful not to touch the windshield where adhesive will be applied.

Adhesive tape B: **Thickness 0.2 mm (0.008 in.)**
Width 5 mm (0.2 in.)

: **Apply primer here.**

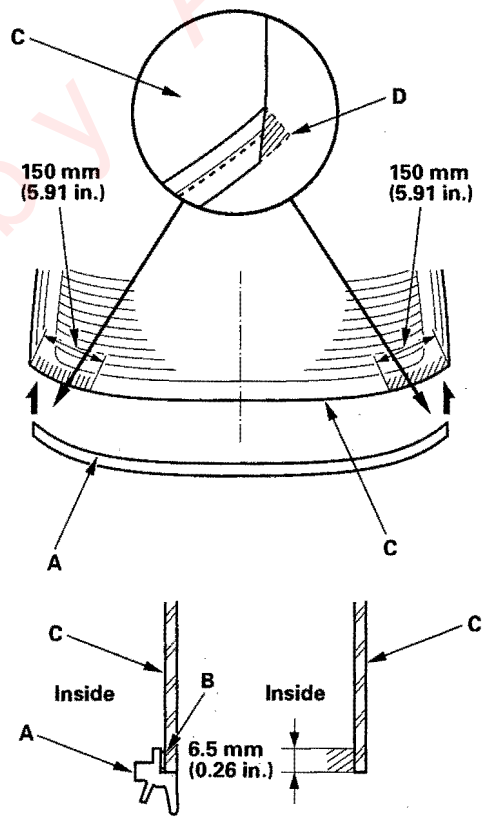

(cont'd)

Protected by A R

Rear Window Replacement (cont'd)

14. Attach the fasteners (A) with adhesive tape to the rear window opening flange (B) of the body on both sides.

Adhesive tape: Thickness 0.8 mm (0.03 in.)

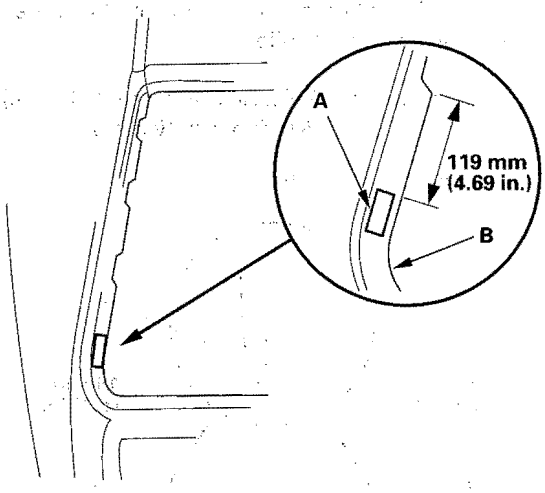

15. Set the rear window in the opening, and center it. Make alignment marks (A) across the rear window and body with a grease pencil at the four points shown. Make sure both upper clips (B) are in the body holes. Be careful not to touch the rear window where adhesive will be applied.

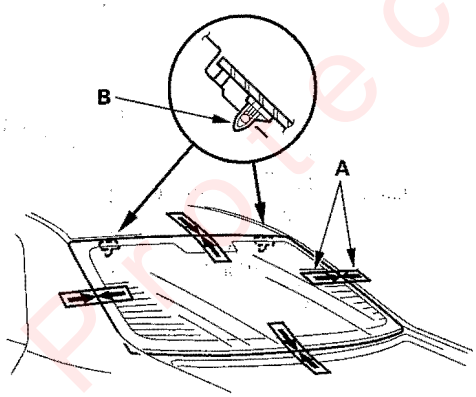

16. Remove the rear window.

17. With a sponge, apply a light coat of glass primer along the edge of the rear window (A) between the dams (B) and molding (C) as shown, then lightly wipe it off with gauze or cheesecloth:

- Do not apply body primer to the rear window, and do not get body and glass primer sponges mixed up.
- Never touch the primed surfaces with your hands. If you do, the adhesive may not bond to the rear window properly, causing a leak after the rear window is installed.
- Keep water, dust, and abrasive materials away from the primed surfaces.

: **Apply glass primer here.**

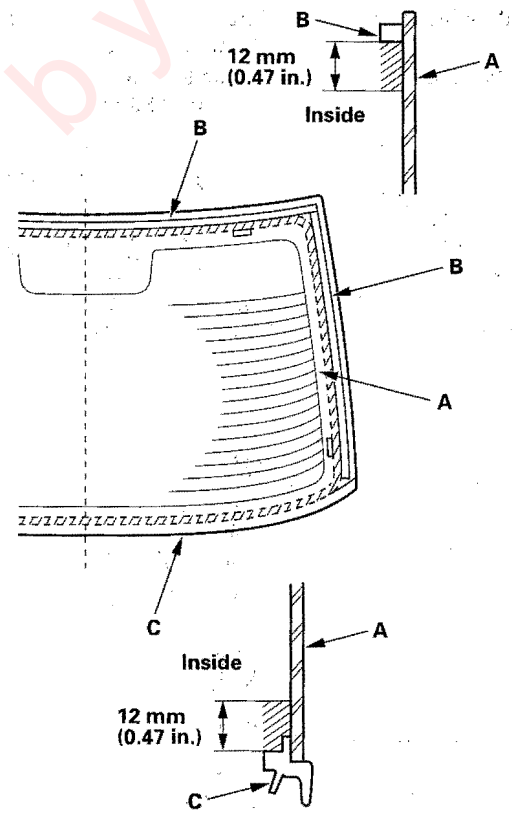

Protected by AR

18. With a sponge, carefully apply a light coat of body primer to any exposed paint around the flange where new adhesive will be applied. Let the primer dry for at least 10 minutes:

- Do NOT apply body primer to any remaining original adhesive on the flange.
- Be careful not to mix up the body and glass primer sponges.
- Never touch the primed surfaces with your hands.

: Apply body primer to exposed paint here.

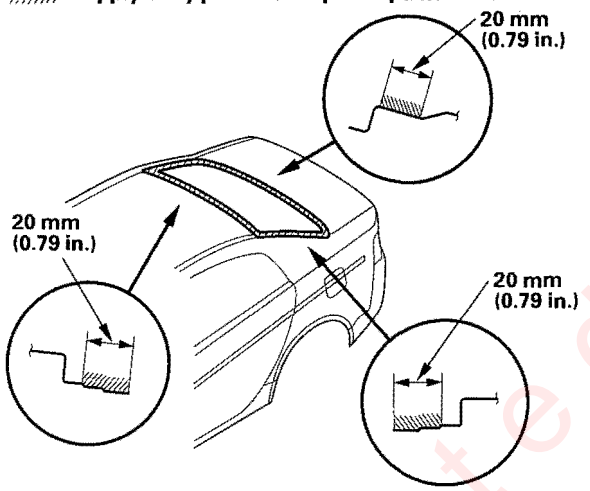

19. Cut a "V" in the end of the nozzle (A) on the adhesive cartridge as shown.

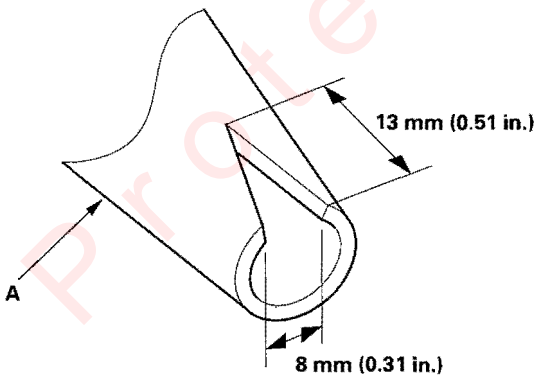

20. Put the cartridge in a caulking gun, and run a bead of adhesive (A) around the edge of the rear window (B) between the dams (C) and molding (D) as shown. Apply the adhesive within 30 minutes after applying the glass primer. Make a slightly thicker bead at each corner.

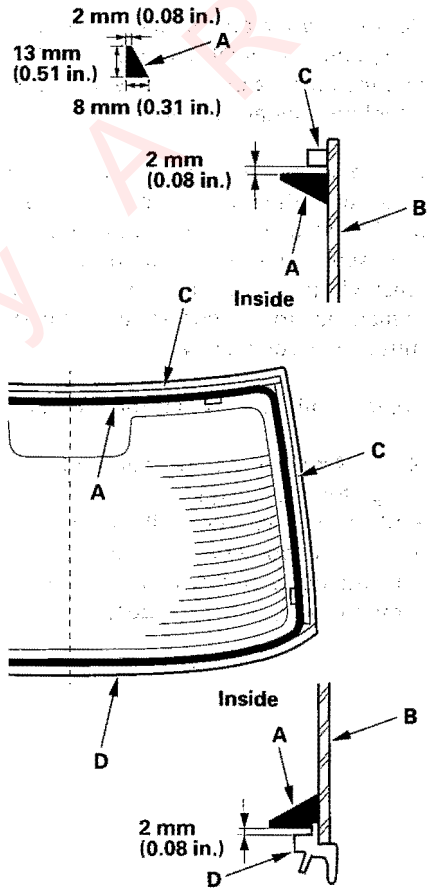

Protected by AR

(cont'd)

Rear Window Replacement (cont'd)

21. Use suction cups to hold the rear window over the opening, align it with the alignment marks you made in step 15, and set it down on the adhesive. Lightly push on the rear window until its edges are fully seated on the adhesive all the way around. Do not open or close the doors until the adhesive is dry.

22. Scrape or wipe any excess adhesive off with a putty knife or towel. To remove adhesive from a painted surface or the rear window, use a soft shop towel dampened with alcohol.

23. Let the adhesive dry for at least 1 hour, then spray water over the rear window and check for leaks. Mark the leaking areas, let the rear window dry, then seal with sealant. Let the vehicle stand for at least 4 hours after rear window installation. If the vehicle has to be used within the first 4 hours, it must be driven slowly.

24. Reinstall all remaining removed parts.

    NOTE: Advise the customer not to do the following things for 2 to 3 days:
    - Slam the doors with all the windows rolled up.
    - Twist the body excessively (such as when going in and out of driveways at an angle or driving over rough, uneven roads).

Protected by AR

Component Location Index

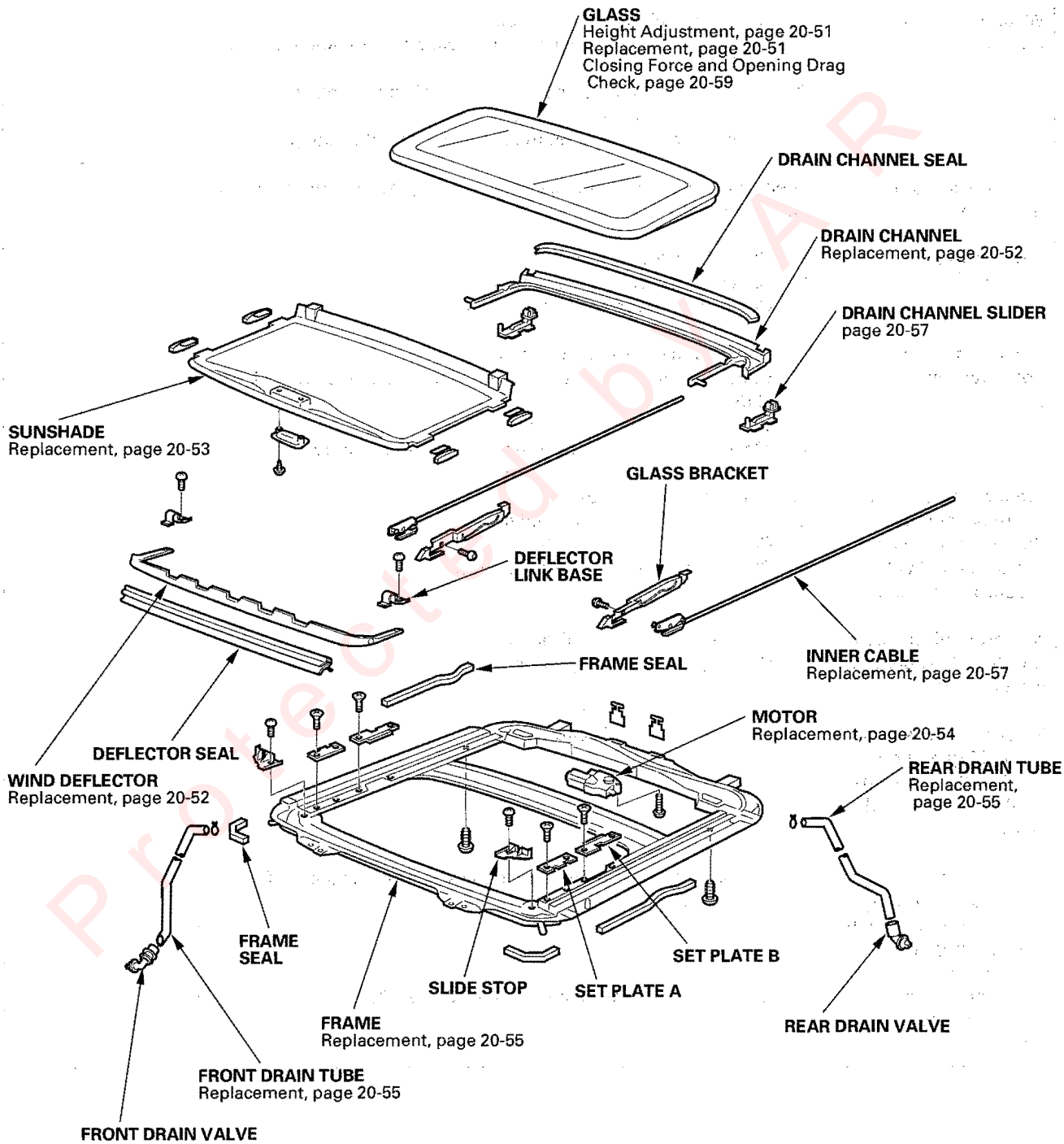

Protected by AR

Symptom Troubleshooting Index

Symptom	Diagnostic procedure	Also check for
Water leaks from moonroof	1. Check for a clogged drain tube. 2. Check for a gap between the glass weatherstrip and the roof panel. 3. Check for a defective or an improperly installed glass weatherstrip or drain channel. 4. Check for a gap between the drain seal and the roof panel.	
Wind noise from moonroof	Check for excessive clearance between the glass weatherstrip and the roof panel.	
Motor noise from moonroof	1. Check for a loose motor. 2. Check for a worn gear or bearing. 3. Check for a deformed cable assembly.	
Moonroof glass does not move, but motor turns	1. Check for a defective gear or inner cable. 2. Check for foreign matter stuck between the guide rail and the slider. 3. Check for a loose inner cable. 4. Make sure the cable assembly is attached properly.	
Moonroof glass does not move and motor does not turn (glass can be moved with moonroof wrench)	1. Check for a blown fuse. 2. Check for a faulty moonroof switch. 3. Check for a run down battery. 4. Check for a defective motor control unit.	
Moonroof glass does not stop at proper flush closed position	1. Perform moonroof calibration. 2. Check glass height adjustment.	
Moonroof glass moves in a jerking motion (moves 40 mm, stops for 0.4 seconds, and repeats)	1. Perform moonroof calibration.	
During auto close operation, moonroof glass reverses when no object is trapped	1. Check for dirt and debris in the track. Perform moonroof calibration.	
Moonroof glass moves, but there is no Auto function	1. Reprogram moonroof motor (see page 22-286).	

Protected by AR

Glass Height Adjustment

The roof panel (A) should be even with the glass weatherstrip (B), to within 0+1/−1 mm (0+0.04/−0.04 in.) all the way around. If not, make the following adjustment:

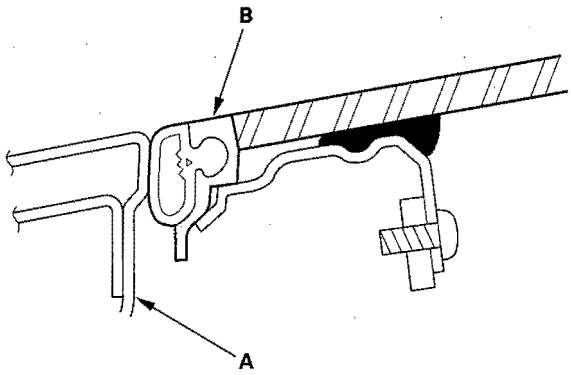

NOTE: Do the moonroof motor calibration procedure (see page 22-286). If glass height is still incorrect go to step 1.

1. Make sure that the tips of the molding (A) are pointing up. Using a Torx T25 bit, loosen the bolts on one side, and adjust the glass (B).

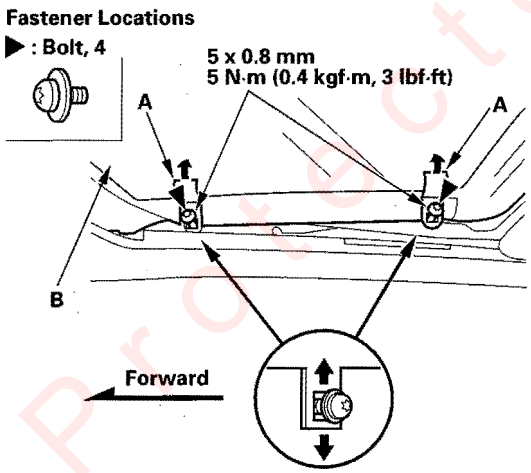

2. If necessary, repeat on the opposite side.

   NOTE: After glass height is mechanically adjusted. Do the moonroof calibration (see page 22-286).

Glass Replacement

1. Close the glass fully.
2. Slide the sunshade all the way back.
3. Make sure that the tips of the molding (A) are pointing up. Using a Torx T25 bit, remove the bolts (B) from both glass brackets (C).

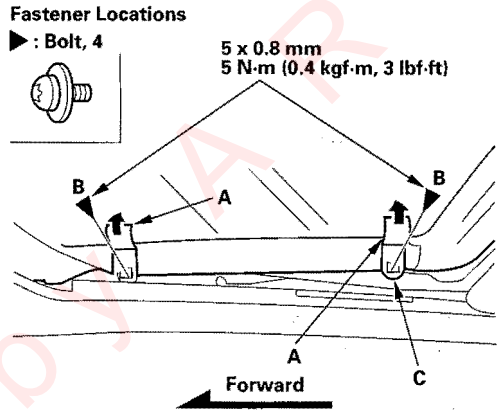

4. Remove the glass (A) by lifting it up. Do not damage the roof panel.

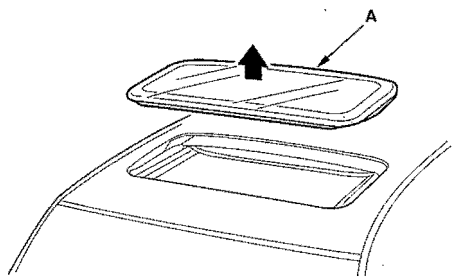

5. Install the glass in the reverse order of the removal, and note these items:

   - Apply liquid thread lock to the glass mounting bolts before reinstallation.
   - Do the moonroof calibration (see page 22-286).
   - Adjust the glass height alignment.

6. Check for water leaks. Use free-flowing water from a hose without a nozzle. Do not use high-pressure water.

   NOTE: It is normal for some water to seep pass the moonroof into the moonroof frame, and exit out through the drains.

Protected by AR

Wind Deflector Replacement

1. Open the glass fully.
2. Remove the screws securing the wind deflector (A).

Fastener Locations

▶ : Screw, 2

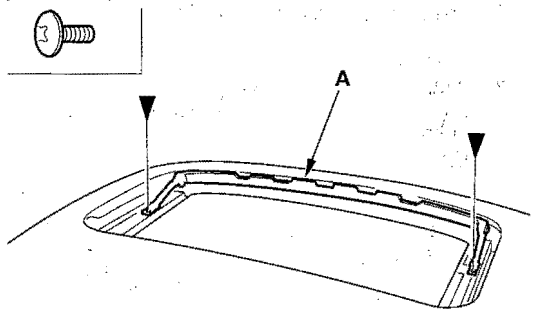

3. Remove the deflector link base (A) from each side. Push the wind deflector (B) down, and pass the deflector spring (C) out through the slot of the slide stop (D) on each side, then remove the wind deflector.

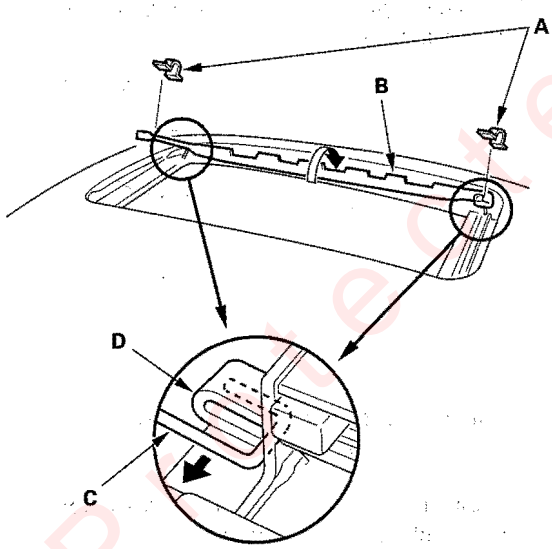

4. Install the deflector in the reverse order of removal, and apply multipurpose grease to both slots where the deflector springs are installed.
5. Reprogram the moonroof motor (see page 22-286).

Drain Channel Replacement

Special Tools Required
Trim pad remover, Snap-on A 177A, or equivalent, commercially available

1. Remove the glass (see page 20-51).
2. Insert the trim tool between the glass bracket (A) and the drain channel. Twist the trim tool to unsnap the pins (B), then gently push the ends of the drain channel towards the center of the vehicle to disengage the pins from the glass bracket.

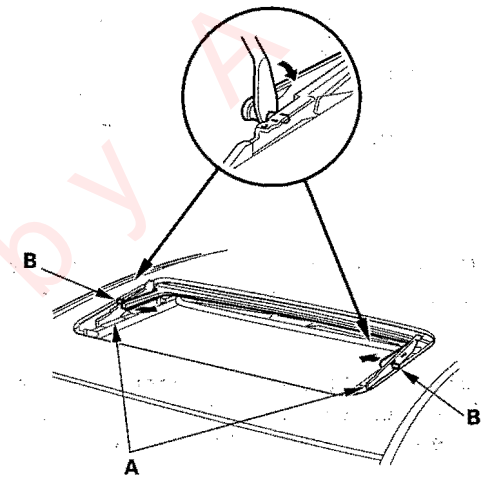

3. Turn the drain channel (A) up while sliding it forward to release it from the pins (B) on both drain channel sliders (C).

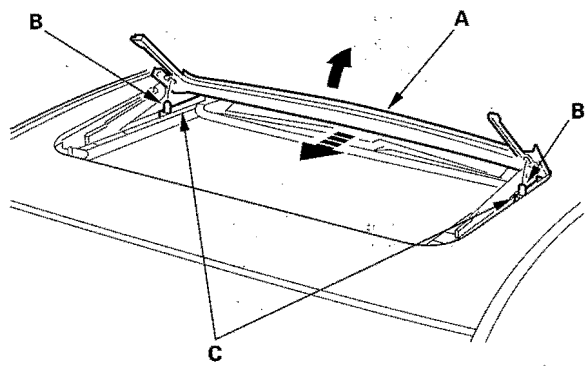

Protected by A

4. Stand the drain channel (A) upright, and pull up the channel to remove it from both drain channel sliders (B).

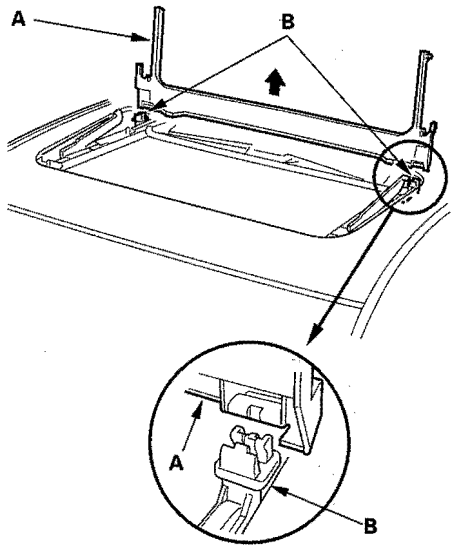

5. Install the channel in the reverse order of removal, and check the glass height adjustment (see page 20-51).

6. Reprogram the moonroof motor (see page 22-286).

7. Check for water leaks. Let the water run freely from a hose without a nozzle. Do not use a high-pressure spray.

Sunshade Replacement

1. Remove the drain channel (see page 20-52).

2. Remove the screws, then remove the set plate (A) from each side.

Fastener Locations

▶ : Screw, 4

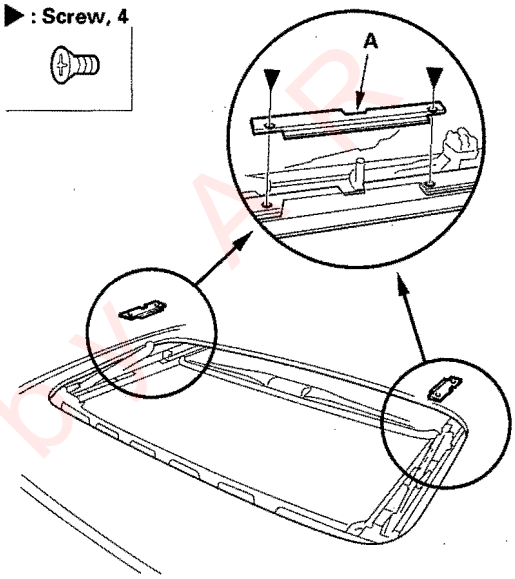

3. Slide the sunshade (A) until you can see both front sunshade base sliders (B).

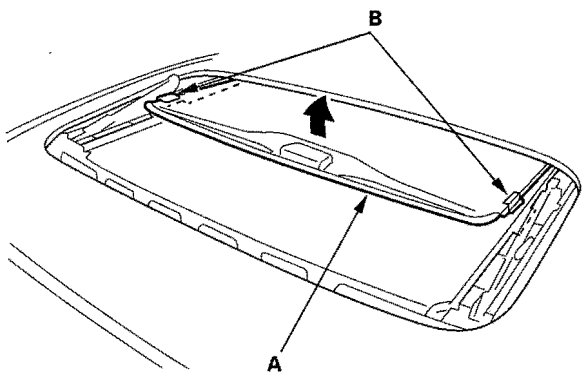

(cont'd)

Protected by AR

Sunshade Replacement (cont'd)

4. While lifting the front portion of the sunshade (A), move the sunshade forward until you can see both rear sunshade base sliders (B). Do not damage the sunshade.

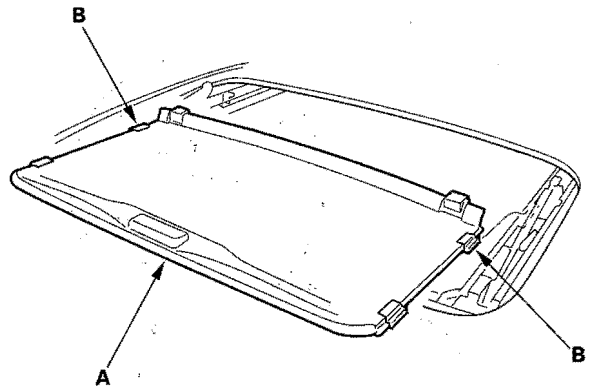

5. Release both rear sunshade base sliders from the guide rail portions of the frame, then remove the sunshade.

6. Install the sunshade in the reverse order of removal, and note these items:

   - Apply liquid thread lock to the set plate mounting screws before reinstallation.
   - Check the glass height adjustment (see page 20-51).

7. Do the moonroof calibration (see page 22-286).

8. Check for water leaks. Let the water run freely from a hose without a nozzle. Do not use a high-pressure spray.

Motor Replacement

1. Remove the headliner (see page 20-70).

2. Put on gloves to protect your hands. Disconnect the connector (A), and using a Torx T25 bit, remove the bolts, then remove the motor (B). Do not operate the motor before reinstallation.

Fastener Locations

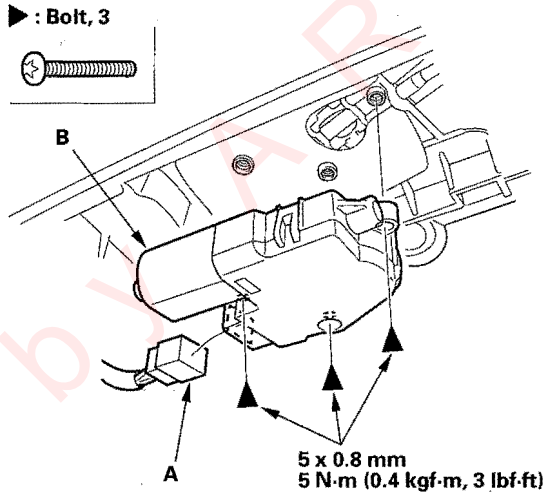

3. Install the motor in the reverse order of removal, and note these items:

   - Apply liquid thread lock to the motor mounting bolts before reinstallation.
   - Make sure the connector is plugged in properly.
   - Do the moonroof calibration (see page 22-286).
   - Check the motor operation.

Protected by AR

Frame and Drain Tube Replacement

SRS components are located in this area. Review the SRS components locations (see page 23-11) and the precautions and procedures (see page 23-13) before performing repairs or service.

1. Remove these items:

   - Headliner (see page 20-70)
   - Moonroof glass (see page 20-51)
   - Side curtain airbag (see page 23-132)

2. Remove the moonroof frame (A). Put on gloves to protect your hands:

   1 Disconnect the motor connector (B), harness clip (C) and the drain tubes (D).
   2 With an assistant holding the frame, remove the bolts (E) starting at the rear, and release the rear hooks (F) by moving the frame forward, then remove the frame.
   3 With the help of an assistant, carefully remove the frame through the door opening. Take care not to scratch the interior trim and body, or tear the seat covers.

Fastener Locations

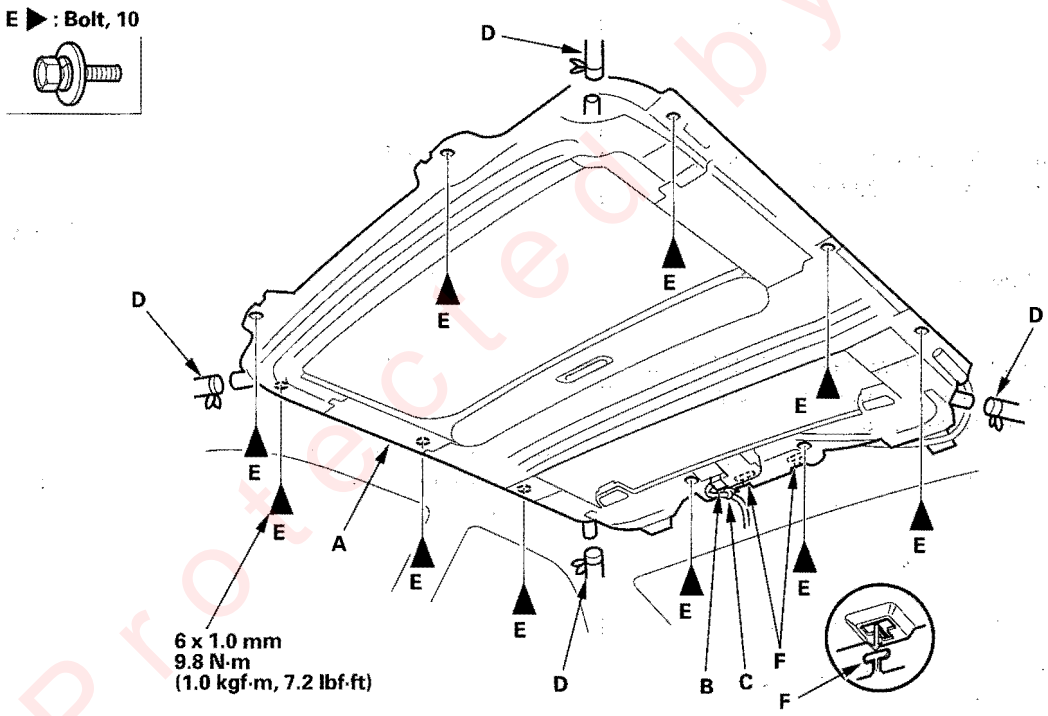

(cont'd)

Frame and Drain Tube Replacement (cont'd)

3. To remove a front drain valve (A) from the body, remove the kick panel, left or right (see page 20-62). Tie a string to the top end of the drain tube, then pull the front drain tube (B) down out of the front pillar.

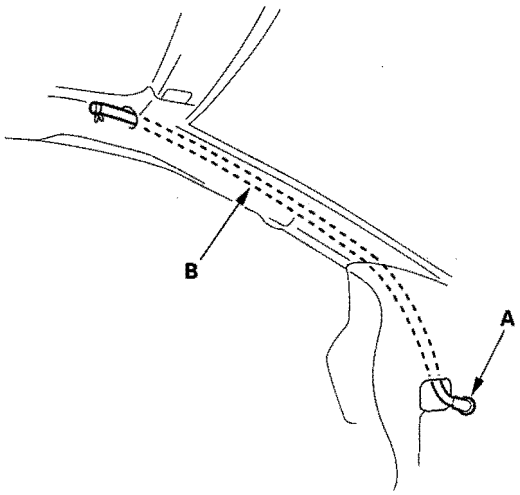

4. To remove a rear drain valve (A) from the body, remove these parts (see page 20-68).

   - Spare tire lid
   - Trunk rear trim panel
   - Jack cover

   Tie a string to the top end of the rear drain tube (B), then pull back the trunk side trim panel and pull the drain tube down out of the pillar.

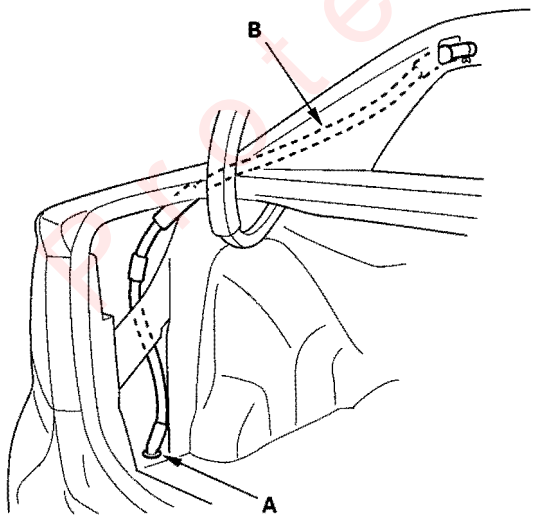

5. Install the frame and drain tube in the reverse order of removal, and note these items:

   - Before installing the frame, clear the drain tubes and drain valves using compressed air.
   - Check the frame seal.
   - Clean the surface of the frame.
   - When installing the frame, first attach the rear hooks into the body holes.
   - Make sure the connectors are plugged in properly.
   - When connecting the drain tube, slide it over the frame nozzle at least 10 mm (0.39 in.).
   - Install the tube clip (A) on the drain tube (B) as shown.
   - After all parts are installed, including the head liner, do the moonroof calibration (see page 22-286).

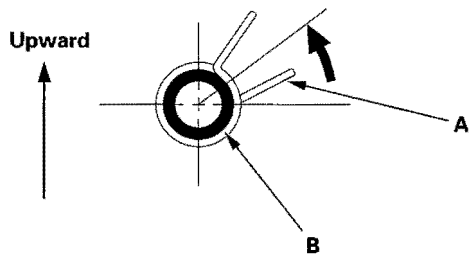

6. Check for water leaks. Let the water run freely from a hose without a nozzle. Do not use a high-pressure spray.

Protected by AP

Inner Cable Replacement

1. Remove the moonroof frame (see page 20-55).

2. Remove these items:

   - Wind deflector (see page 20-52)
   - Drain channel (see page 20-52)
   - Moonroof motor (see page 20-54)

3. Remove the screws (A, B), then remove the slide stop (C) and the plate (D).

Fastener Locations

A ▶ : Screw, 1 B ▶ : Screw, 2

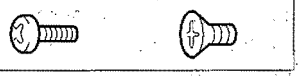

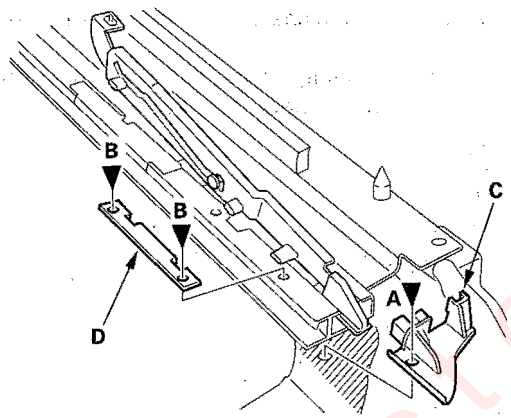

4. Slide the glass bracket (A) out of the guide rail (B).

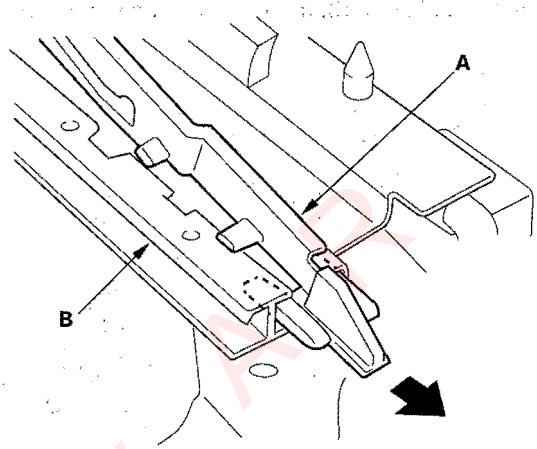

5. Remove the glass bracket (A) from the link lifter (B).

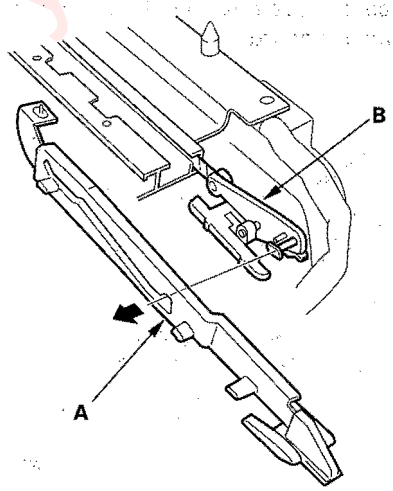

(cont'd)

Protected by ARK

Inner Cable Replacement (cont'd)

6. Pull the slider portion (A) of the inner cable (B) out of the slide rail (C), then remove the inner cable.

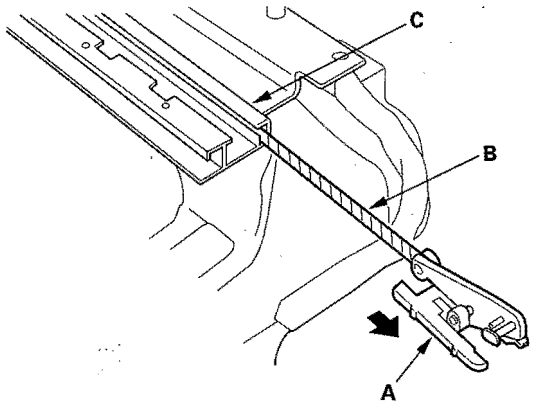

7. If necessary, remove the drain channel slider (A) by sliding it forward.

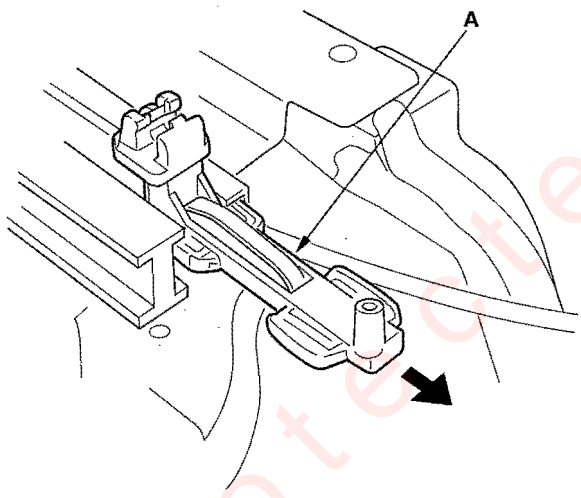

8. Install the slider and cable in the reverse order of removal, and note these items:

- Damaged parts should be replaced.
- Apply multipurpose grease to the glass bracket (A) and guide rail portion of the frame (B) indicated by the arrows.
- Apply butyl sealant (C) to both the frame (D) and the slide stop (E), then reinstall with screw (F).
- Apply liquid thread lock to the set plate (G) mounting screws (H) before reinstallation.
- Before reinstalling the motor, slide both glass brackets rearward fully until the slider portions (I) of the inner cable contact with the screws (J) on the guide rail to align both glass brackets.
- Before reinstalling the motor, install the frame and glass, then check the opening drag (see page 20-59).
- After reinstalling the motor, do the moonroof calibration (see page 22-286).

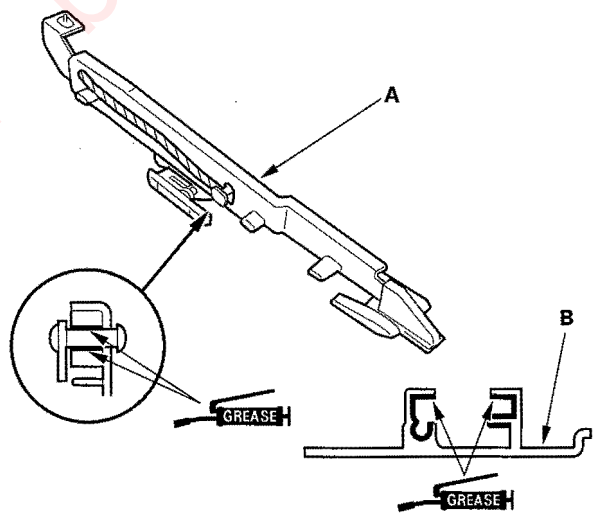

Protected by

Fastener Locations

F ▶ : Screw, 1 H ▶ : Screw, 2

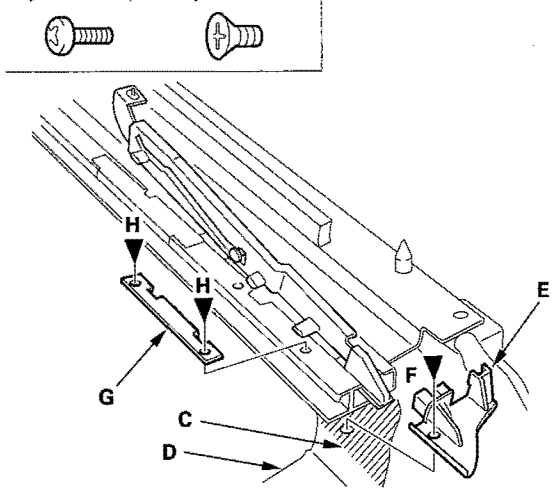

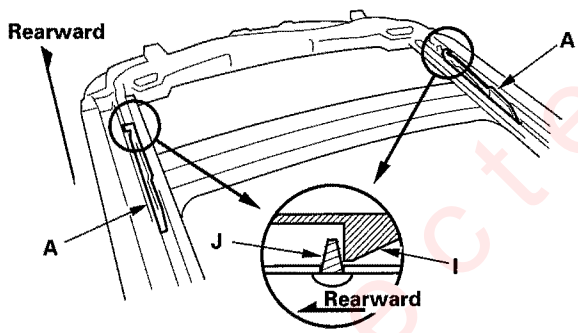

Closing Force and Opening Drag Check

1. Remove the headliner (see page 20-70).

2. Closing force check:

   - With a shop towel (A) on the leading edge of the glass (B), attach a spring scale (C) as shown.
   - Have an assistant hold the switch to close the glass while you measure the force required to stop it.
     NOTE: This moonroof switch has two detent in the slide open/closed positions, the first one is manual operation, the second is auto operation. Only use the first detent (manual close) while doing this test.
   - Read the force as soon as the glass stops moving, then immediately release the switch and spring scale.

   Closing Force: 200—290 N (20—30 kgf, 44—66 lbf)

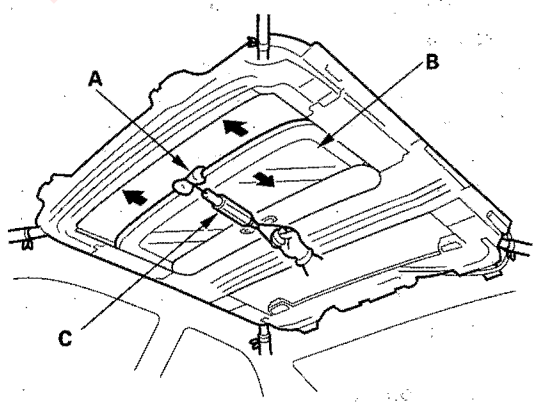

3. If the force in not within specification, remove the moonroof motor (see page 20-54).

(cont'd)

Protected by

Closing Force and Opening Drag Check (cont'd)

4. Opening drag check: Protect the leading edge of the glass with a shop towel (A). Measure the effort required to open the glass using a spring scale (B) as shown.

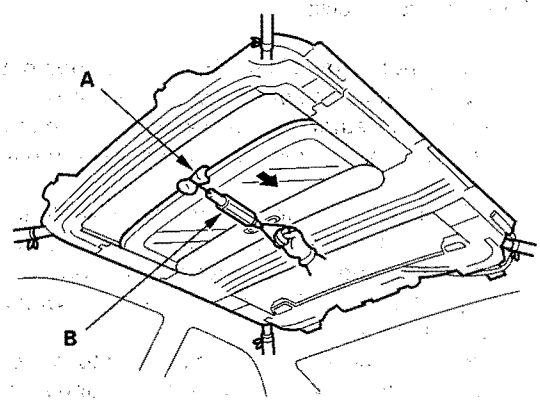

5. If the load is over 40 N (4 kgf, 9 lbf), check:

   - The side clearance and glass height adjustment (see page 20-51).
   - For broken or damaged sliding parts. If any sliding parts are damaged, replace them.
   - The gear portion and the inner cable for damage. If the gear portion is broken, replace the motor. If the inner cable is damaged, remove the frame (see page 20-55), and replace the cable (see page 20-57).
   - The moonroof motor (see page 20-54). If the motor fails to run or doesn't turn smoothly, replace it.

6. Do the moonroof motor reprogram procedure (see page 22-286) after reinstalling the moonroof motor.

Protected by AR

Component Location Index

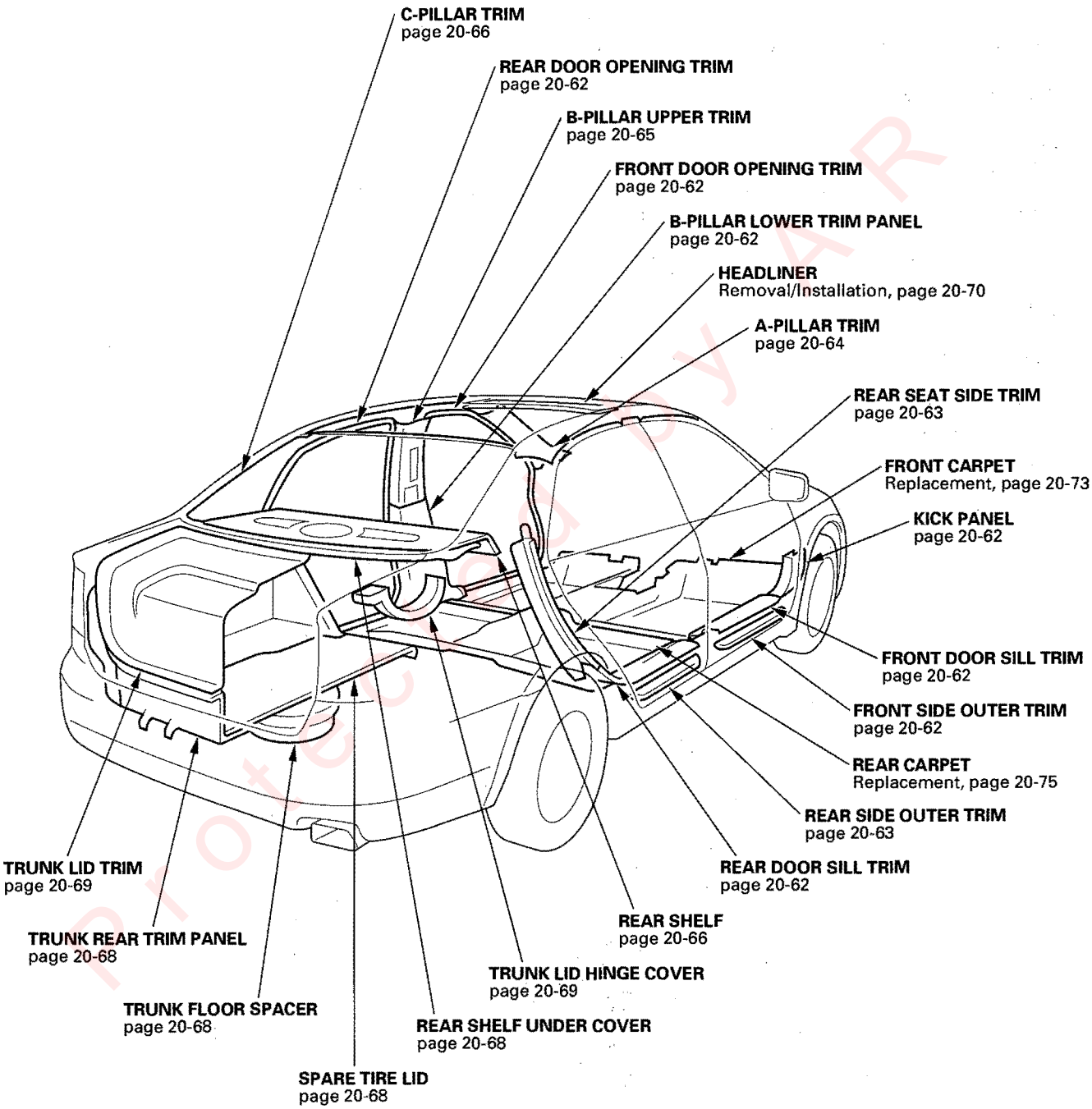

Protected by A R

Trim Removal/Installation - Door Area

Special Tools Required
KTC trim tool set SOJATP2014

SRS components are located in this area. Review the SRS component locations (see page 23-11) and the precautions and procedures (see page 23-13) before performing repairs or service.

Front Door Sill Area

NOTE:
- Put on gloves to protect your hands.
- Use the appropriate tool from the KTC trim tool set to avoid damage when prying components.
- Take care not to bend or scratch the trim and panels.

1. Remove the footrest (see step 5 on page 20-73).
2. Remove the trim in the sequence shown.
3. Install the trim in the reverse order of removal, and note these items:
   - Replace any damaged clips.
   - Push the clips into place securely.

Fastener Locations

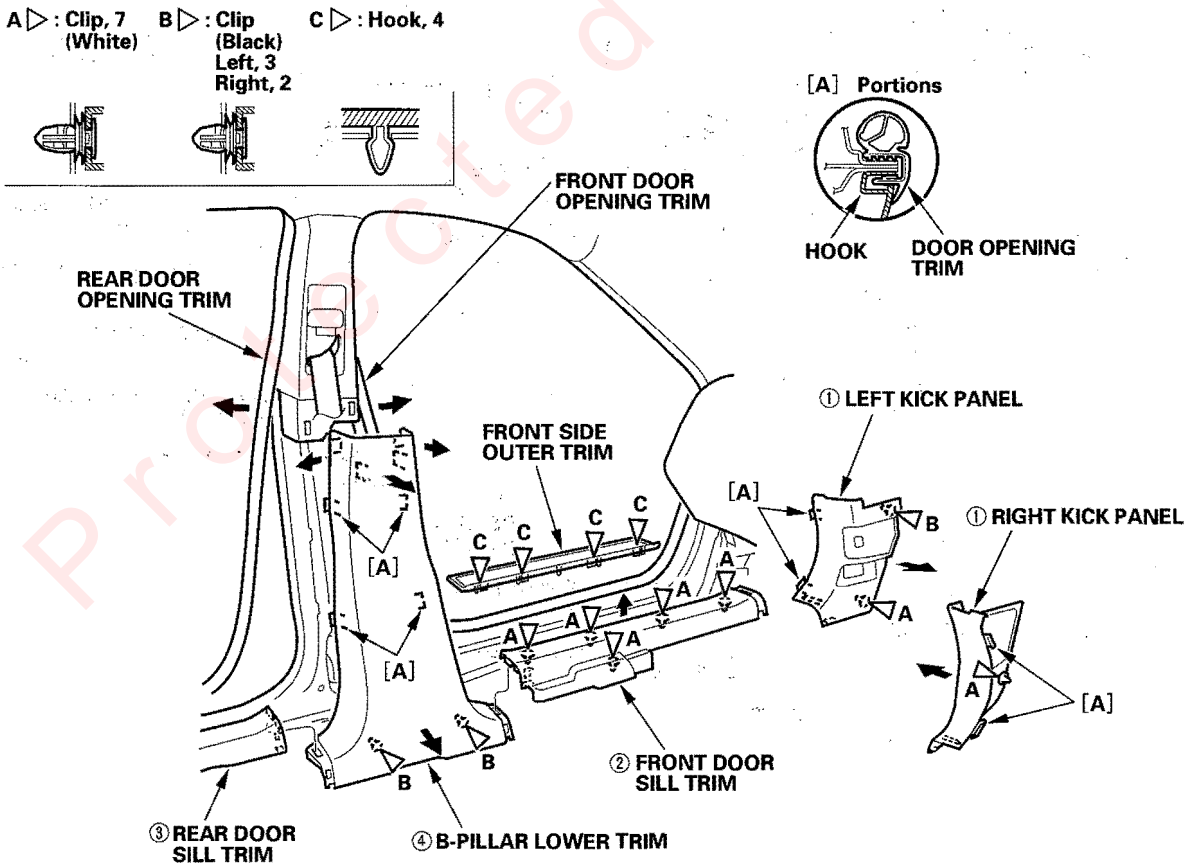

Protected by AR

Rear Door Sill Area

NOTE:
- Put on gloves to protect your hands.
- Use the appropriate tool from the KTC trim tool set to avoid damage when prying components.
- Take care not to bend or scratch the trim and panels.

1. Remove these items, then remove the trim as shown:

   - Rear seat cushion (see page 20-112)
   - Rear seat-back (see page 20-112)

2. Install the trim in the reverse order of removal, and note these items:

   - Replace any damaged clips.
   - Push the clips into place securely.

Fastener Locations

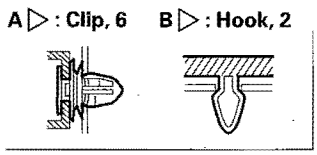

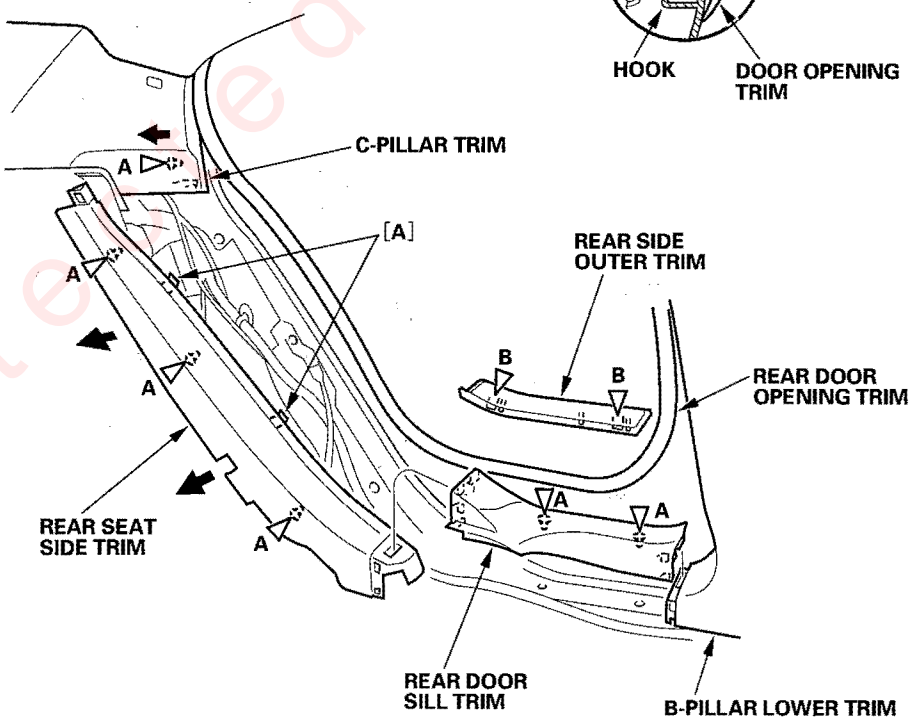

Protected by AR

(cont'd)

Trim Removal/Installation - Door Area (cont'd)

A-pillar Area

NOTE:
- Put on gloves to protect your hands.
- Use the appropriate tool from the KTC trim tool set to avoid damage when prying components.
- Take care not to bend or scratch the trim and panels.

1. Remove the trim as shown:

2. Install the trim in the reverse order of removal, and note these items:

   - If the side curtain airbag have deployed, be sure to check the removed trim pieces for damage before reinstallation (see page 23-125), and if necessary, replace them and trim clips with new ones.
   - If the side curtain airbag have not deployed, removed trim pieces should still be checked for damage (see page 23-125), and replaced with new ones if necessary.
   - Make sure the top of the trim overlaps with the headliner correctly (see page 23-127).
   - Push the cap and clip into place securely.

Fastener Location

▷: Clip, 1

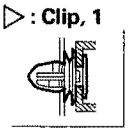

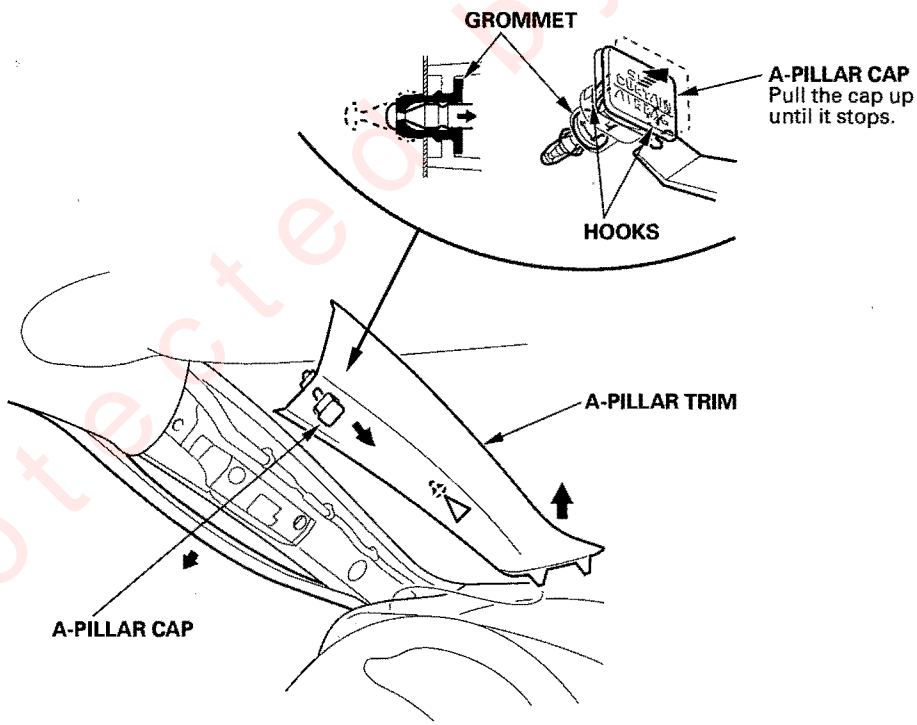

Protected by AR

B-pillar Upper Area

NOTE:
- Put on gloves to protect your hands.
- Use the appropriate tool from the KTC trim tool set to avoid damage when prying components.
- Take care not to bend or scratch the trim and panels.

1. Remove these items, then remove the trim as shown:

   - Door sill trim
   - B-pillar lower trim

2. Install the trim in the reverse order of removal, and note these items:

   - If the side curtain airbag have deployed, be sure to check the removed trim pieces for damage before reinstallation (see page 23-125), and if necessary, replace them and trim clips with new ones.
   - If the side curtain airbag have not deployed, removed trim pieces should still be checked for damage (see page 23-125), and replaced with new ones if necessary.
   - Make sure the top of the trim overlaps with the headliner correctly (see page 23-127).
   - Make sure the trim hooks are installed into the holes in the side curtain airbag center bracket securely.
   - Push the clip into place securely.
   - Apply liquid thread lock to the front seat belt anchor bolts before installation.
   - Before installing the anchor bolts, make sure there are no twists or kinks in the seat belt.

Fastener Location

▷ : Clip, 1

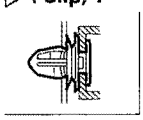

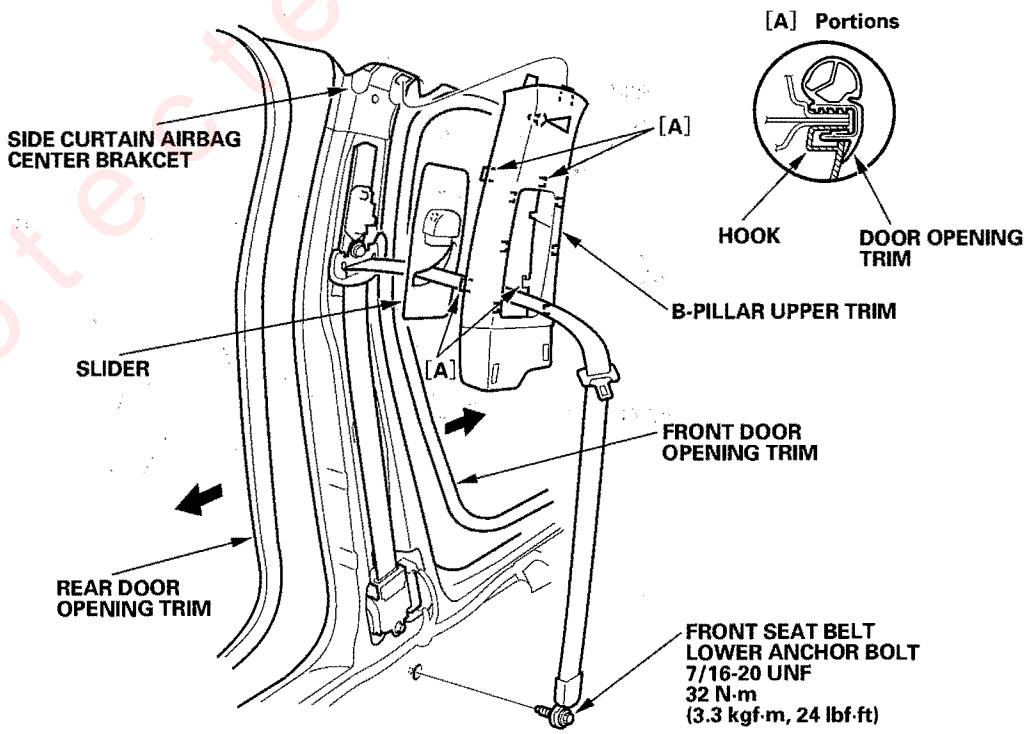

Protected by AR

Trim Removal/Installation - Rear Shelf Area

C-pillar Area

NOTE:
- Put on gloves to protect your hands.
- Use the appropriate tool from the KTC trim tool set to avoid damage when prying components.
- Take care not to bend or scratch the trim and panels.

1. Remove the trim as shown.

2. Install the trim in the reverse order of removal, and note these items:

   - If the side curtain airbags have deployed, be sure to check the removed trim pieces for damage before reinstallation (see page 23-125), and if necessary, replace them and the trim clips with new ones.
   - If the side curtain airbags have not deployed, removed trim pieces should still be checked for damage (see page 23-125), and replaced with new ones if necessary.
   - Make sure the top of the trim overlaps with the headliner correctly (see page 23-127).
   - Push the cap and clips into place securely.

Fastener Locations

▷ : Clip, 5

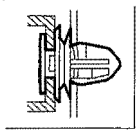

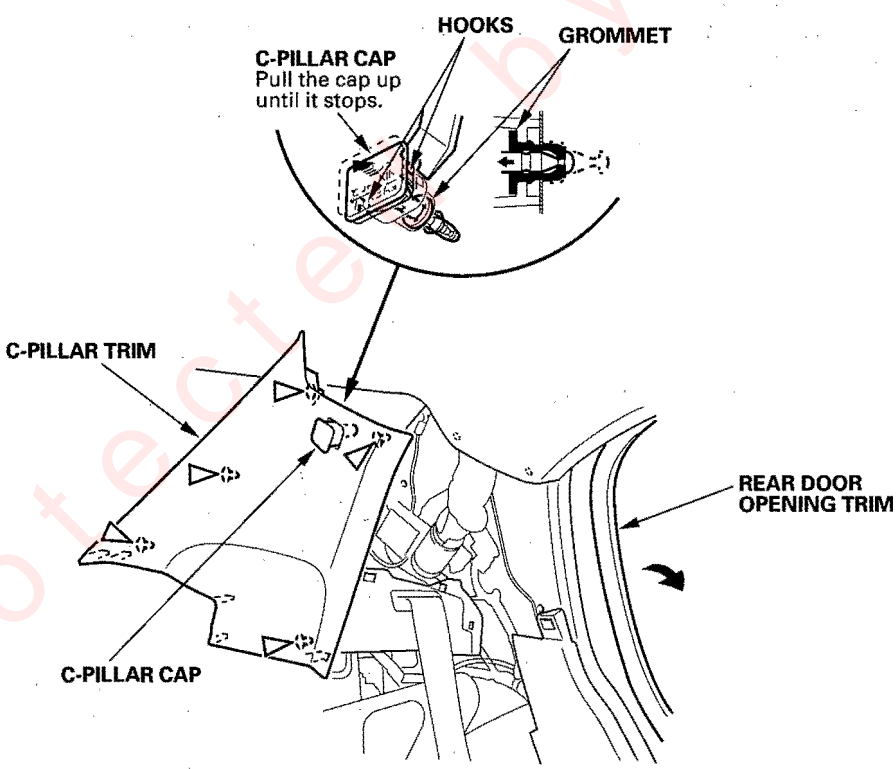

Protected by AR

Rear Shelf Area

SRS components are located in this area. Review the SRS component locations (see page 23-11) and the precautions and procedures (see page 23-13) before performing repairs or service.

NOTE:
- Put on gloves to protect your hands.
- Use the appropriate tool from the KTC trim tool set to avoid damage when prying components.
- Take care not to bend or scratch the trim and panels.

1. Remove these items:

   - Rear seat cushion (see page 20-112)
   - Rear seat-back (see page 20-112)
   - C-pillar trim, both sides (see page 20-66)

2. Lift the rear shelf to release the clips, then pull the rear shelf towards the front of the vehicle.

   NOTE: The shelf may be stuck to the rear window and may require some force to detach. Make sure that all the clips are released before pulling the shelf out.

3. Install the trim in the reverse order of removal, and note these items:

   - Replace any damaged clips.
   - When installing the rear shelf, slip the rear seat belts and center seat belt through the slits in the rear shelf.
   - Push the clips into place securely.

Fastener Locations

▷ : **Clip, 8**

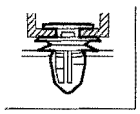

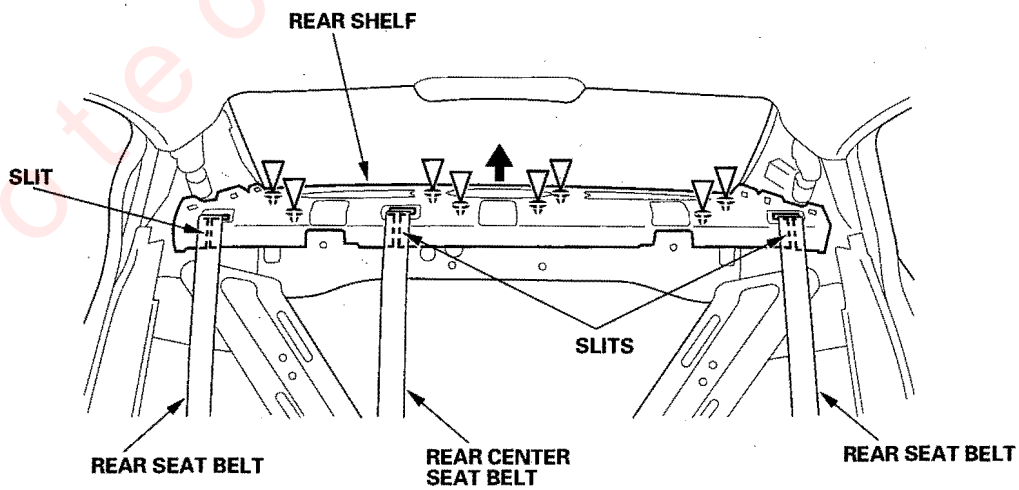

Protected by AR

Trim Removal/Installation - Trunk Area

NOTE:
- Put on gloves to protect your hands.
- Use the appropriate tool from the KTC trim tool set to avoid damage when prying components.
- Take care not to bend or scratch the trim and panels.

1. Remove the trim as shown.

2. Install the trim in the reverse order of removal, and note these items:

   - Replace any damaged clips.
   - When installing the trunk side trim panel, slip the trunk lid hinge through the slits in the trim panel.
   - Push the clips into place securely.

Fastener Locations

A ▷ : Clip, 4 B ▷ : Clip, 2 C ▷ : Clip, 9 D ▶ : Screw, 9 E ▶ : Bolt, 1

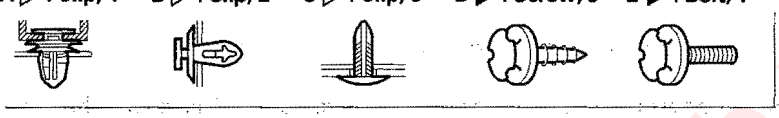

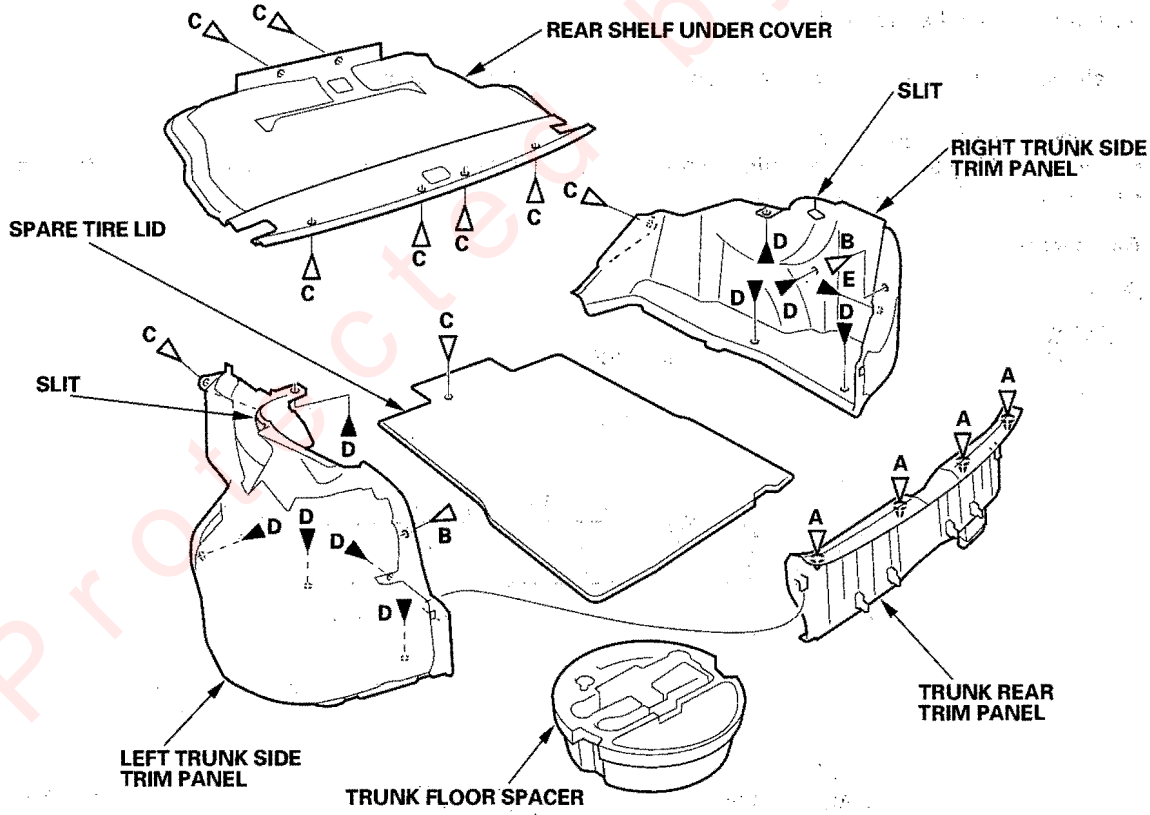

Protected by AR

Trim Removal/Installation - Trunk Lid

NOTE:
- Put on gloves to protect your hands.
- Use the appropriate tool from the KTC trim tool set to avoid damage when prying components.
- Take care not to bend or scratch the trim and panels.

1. Remove the trim as shown.

2. Install the trim in the reverse order of removal, and note these items:

   - Replace any damaged clips.
   - When installing the trunk lid trim, slip the trunk lid hinges through the slits in the trunk lid trim.
   - Push the clips into place securely.

Fastener Locations

A ▷: Clip, 9 B ▶: Screw, 1

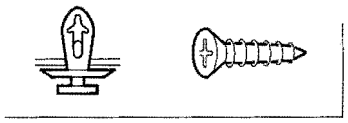

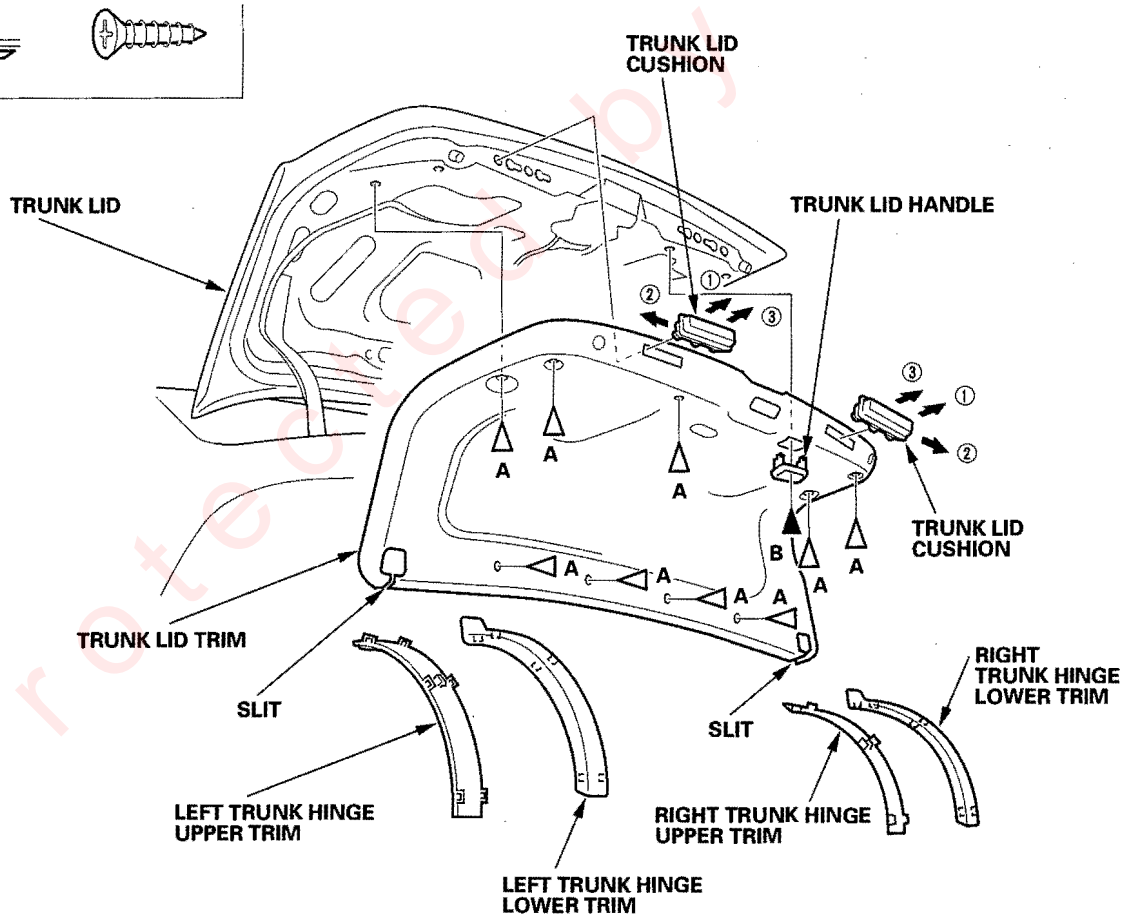

Protected by AR

Headliner Removal/Installation

Special Tools Required
KTC trim tool set SOJATP2014

SRS components are located in this area. Review the SRS component locations (see page 23-11) and the precautions and procedures (see page 23-13) before performing repairs or service.

NOTE:
- Use the appropriate tool from the KTC trim tool set to avoid damage when prying components.
- Take care not to bend and scratch the headliner.
- Be careful not to damage the dashboard and other interior trim.

1. Remove these items:
   - A-pillar trim, both sides (see page 20-62)
   - B-pillar upper trim, both sides (see page 20-65)
   - C-pillar trim, both sides (see page 20-66)
   - Rear map light (see page 22-207)
   - Vanity light, both sides (see page 22-209)

2. From both sides, using a trim tool, release the tabs (A), then remove the sunvisor cap (B) from the bracket (C). Turn the cap, and remove it.

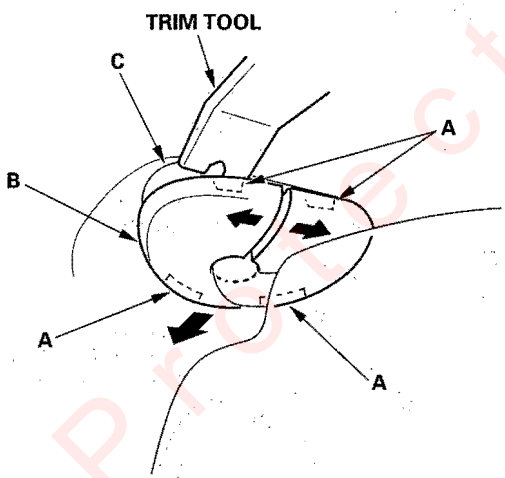

3. From both sides, remove the sunvisor (A) and holder (B).
   - –1 Remove the self-tapping ET screws.
   - –2 Remove the sunvisor from the body and holder.
   - –3 Disconnect the vanity mirror light connector (C).
   - –4 Using a flat-tip screwdriver, push the hook (D), and turn the holder 90°, then pull it out.

Fastener Locations
▶ : Screw, 4

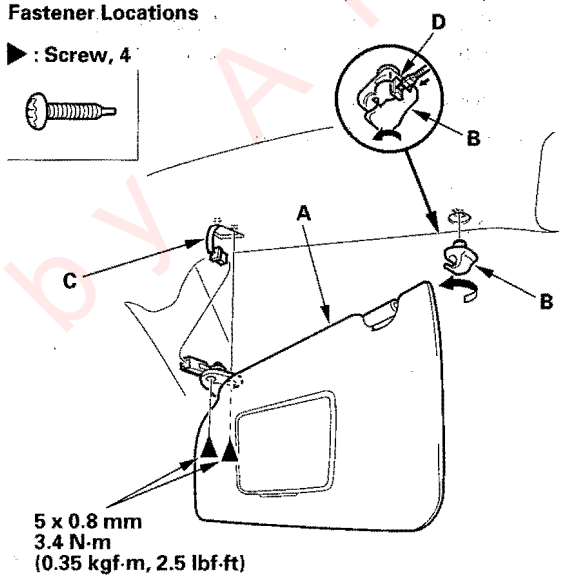

Protected by A R

4. Remove the front individual map lights (see page 22-207), and remove the bolts securing the roof console (A).

Fastener Locations

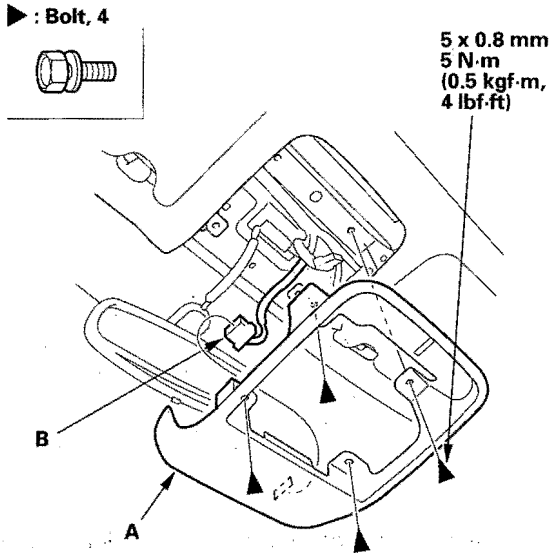

5. Pull out the roof console, then disconnect the HFL unit connector (B).

6. Release the clips (A, B), then remove the high mount brake light cover (C).

Fastener Locations

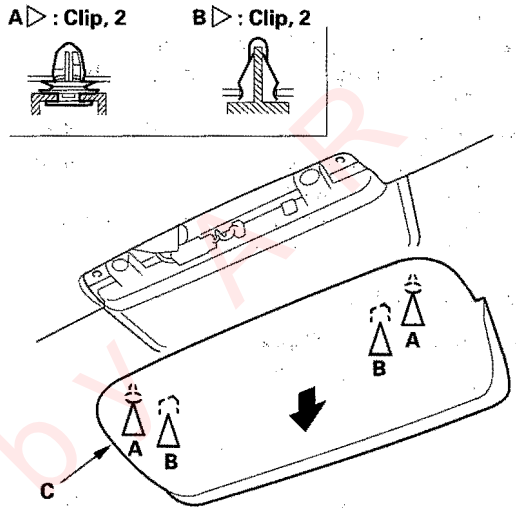

7. Remove the caps (A), and remove the self-tapping ET screws, then remove the grab handle (B).

Fastener Locations

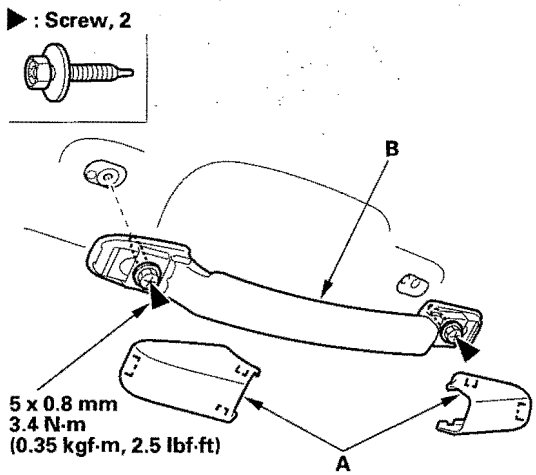

(cont'd)

Protected by KAR

Headliner Removal/Installation (cont'd)

8. Remove the headliner.

   1. Remove the front door opening trim (A) and rear door opening trim (B) from each roof portion.
   2. Detach the clips (C), and release the fasteners (D) by pulling the front portion of the headliner (E) down.
   3. With the help of an assistant, detach the rear clips (F) by sliding the headliner forward, and lowering the headliner.
   4. Remove the headliner through the front passenger's door opening.

Fastener Locations

C ▷: Clip, 4 F ▷: Clip, 2

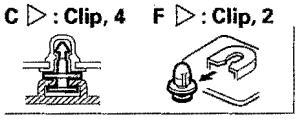

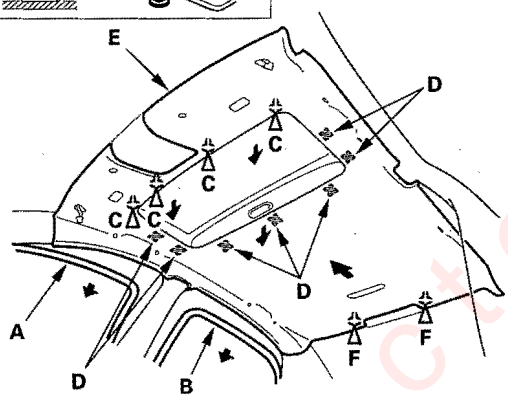

9. If necessary, detach the hooks (A), and remove the clip, then remove the roof console bracket (B).

Fastener Location

▷: Clip, 1

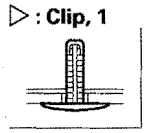

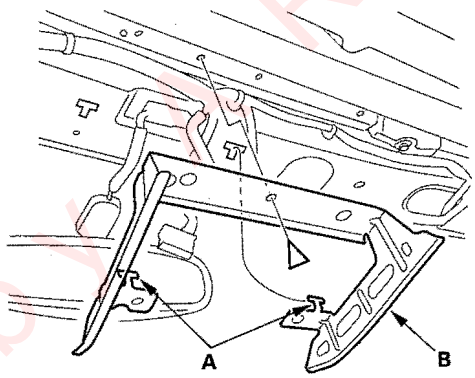

10. Install the headliner in the reverse order of removal, and note these items:

- When reinstalling the headliner through the door opening, be careful not to fold or bend it too much. Also, be careful not to scratch the body.
- If the threads on a visor or grab handle screw is worn out, use an oversized self-tapping ET screw made specifically for this application:

  Visor: P/N 90136-S30-003
  Grab handle: P/N 90136-S0A-003

- Check that both sides of the headliner are securely attached to the trim.
- Make sure the top of the pillar trim overlaps with the headliner correctly (see page 23-125).
- Do the moonroof calibration (see page 22-286).

Protected by

Front Carpet Replacement

Special Tools Required
KTC trim tool set SOJATP2014

SRS components are located in this area. Review the SRS component locations (see page 23-11) and the precautions and procedures (see page 23-13) before performing repairs or service.

NOTE:
- Put on gloves to protect your hands.
- Use the appropriate tool from the KTC trim tool set to avoid damage when prying components.
- Take care not to damage, wrinkle or twist the carpet.
- Be careful not to damage the dashboard or other interior trim pieces.

1. Make sure you have the anti-theft codes for the radio and the navigation system, then write down the XM radio channel presets.

2. Disconnect the negative cable from the battery, and wait at least 3 minutes before beginning work.

3. Remove these items:

   - Front seats, both sides (see page 20-99)
   - Front door sill trim, both sides (see page 20-62)
   - Kick panel, both sides (see page 20-62)
   - Center console rear section (see page 20-77)
   - Center console panel (see page 20-78)
   - Rear vent duct (see step 4 on page 20-90)
   - Fuel fill door opener cover (see step 2 on page 20-153)
   - Driver's dashboard under cover (see page 20-83)
   - Passenger's dashboard under cover (see page 20-84)
   - Steering joint cover (see page 17-24)

4. Push the knob (A) back to release the hook (B) then pull up the accelerator pedal (C).

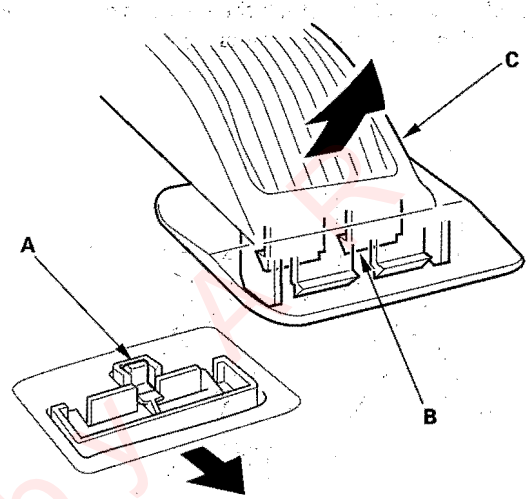

5. Detach the clips, then remove the footrest (A).

Fastener Locations

▷ : **Clip, 2**

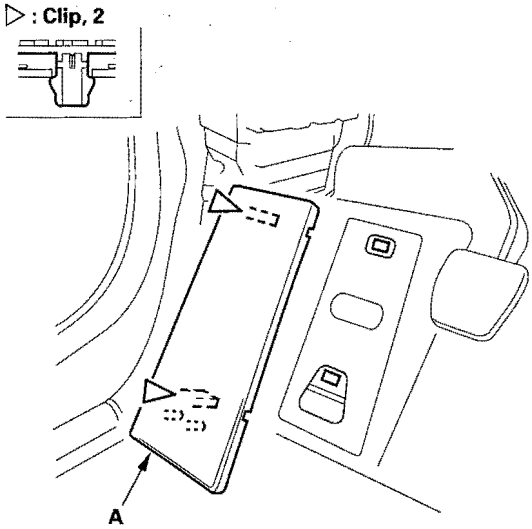

Protected by

(cont'd)

Front Carpet Replacement (cont'd)

6. Disconnect the antenna lead (A), the side curtain airbag subharness connector (B), and the parking brake switch (C). Detach the harness clips (D), and on A/T model, harness clips (E).

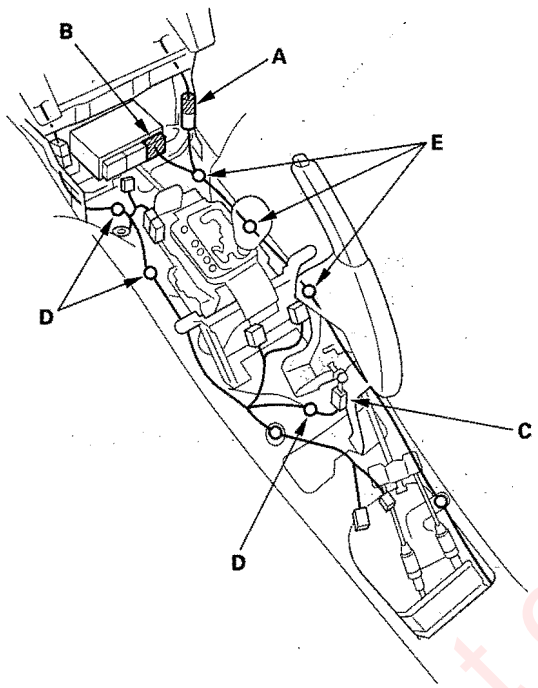

7. Remove the bolts securing the shift lever bracket or select lever bracket (A).

Fastener Locations

▶: Bolt, 4

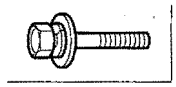

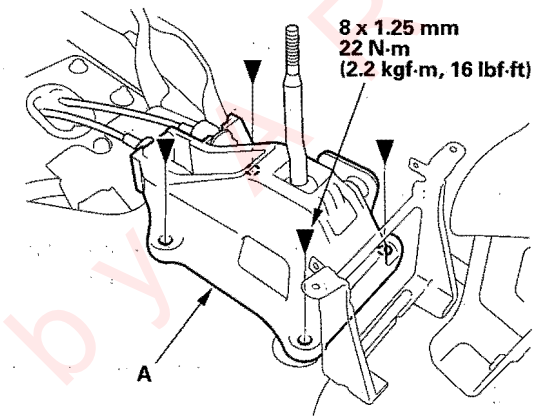

Protected by

Rear Carpet Replacement

8. Release the clips (A, B) from the front floor carpet (C).

Fastener Locations

A ▷: Clip, 6 B ▷: Clip, 2 D ▷: Hook, 2

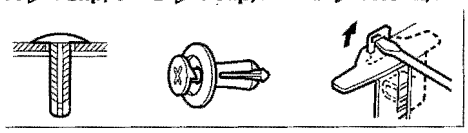

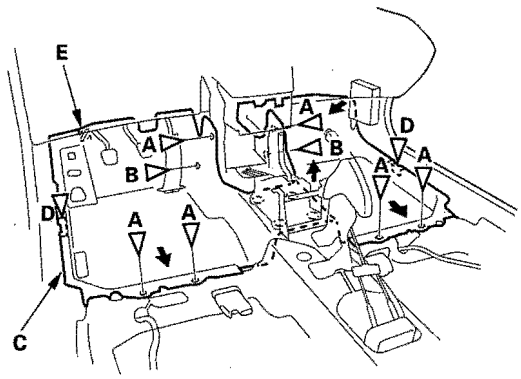

9. Release the hooks (D) with a flat-tip screwdriver by pushing the screwdriver toward the door, then lift upwards. Pull the fastener (E) out, then remove the carpet.

10. Install the carpet in the reverse order of removal, and note these items:

- Take care not to damage, wrinkle or twist the carpet.
- Make sure the seat harnesses and antenna lead are routed correctly.
- Replace the any damaged clips.
- Reconnect the negative cable to the battery.
- Set the clock.
- Enter the anti-theft codes for the radio and the navigation system, then enter the customer's XM radio channel presets.

SRS components are located in this area. Review the SRS component locations (see page 23-11) and the precautions and procedures (see page 23-13) before performing repairs or service.

NOTE:
- Put on gloves to protect your hands.
- Take care not to damage, wrinkle or twist the carpet.
- Be careful not to damage the dashboard or other interior trim pieces.

1. Make sure you have the anti-theft codes for the radio and the navigation system, then write down the XM radio channel presets.

2. Disconnect the negative battery cable, and wait at least 3 minutes before beginning work.

3. Remove these items:

- Front seats, both sides (see page 20-99)
- Rear seat cushion (see page 20-112)
- Front door sill trim, both sides (see page 20-62)
- Rear door sill trim, both sides (see page 20-62)
- Center console rear section (see page 20-77)
- B-pillar lower trim, both sides (see page 20-62)

4. Remove the front seat belt lower anchor bolt, both sides (see step 5 on page 23-4).

(cont'd)

Protected by A.R.

Rear Carpet Replacement (cont'd)

5. Disconnect the antenna lead (A) and disconnect the side curtain airbag subharness connector (B). Detach the harness clips (C), and on A/T model, harness clips (D).

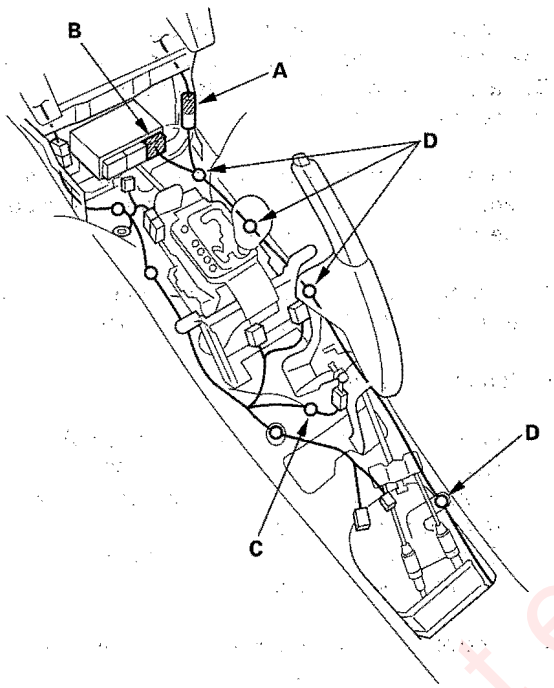

6. Release the clips (A) securing the front floor carpet (B) and rear floor carpet (C).

Fastener Locations

A ▷ : Clip, 4 D ▷ : Hook, 2

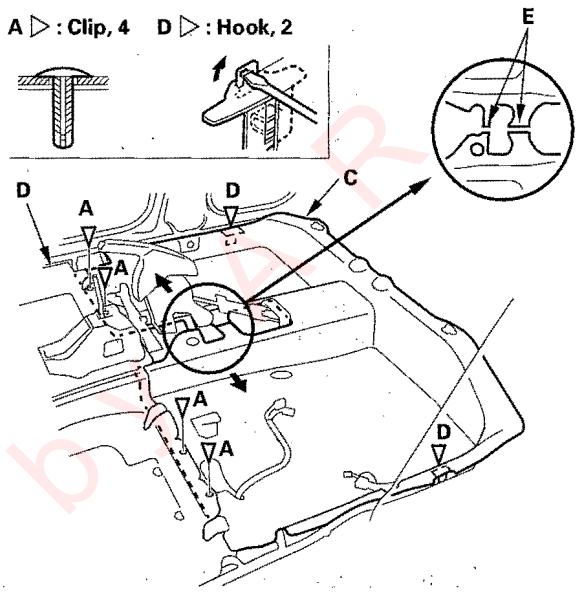

7. Release the hooks (D) with a flat-tip screwdriver by pushing the screwdriver toward the door, then lifting upwards. Cut the carpet in the areas (E) show, then remove the carpet.

8. Install the carpet in the reverse order of removal, and note these items:

- Take care not to damage, wrinkle or twist the carpet.
- Make sure the seat harnesses and antenna lead are routed correctly.
- Replace the any damaged clips.
- Reconnect the negative cable to the battery.
- Reset the clock.
- Enter the anti-theft codes for the radio and the navigation system, then enter the customer's XM radio channel presets.

Protected by ARR

Center Console Rear Section Removal/Installation

Special Tools Required
KTC trim tool set SOJATP2014

NOTE:
- Use the appropriate tool from the KTC trim tool set to avoid damage when prying components.
- Take care not to scratch the front seat, dashboard, and related parts.

1. M/T: Lower the shift lever boot (A) to release the hooks (B) from the boot, then remove the shift knob (C).

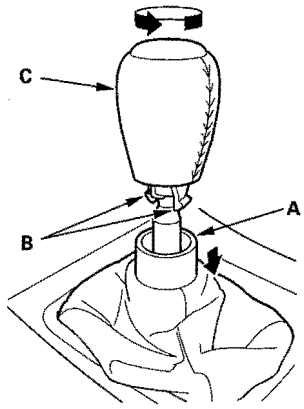

2. Detach the clips (A, B), and release the hooks (C) by carefully insterting a trim tool between the HVAC panel and the center console trim (D), and prying gently on both sides.

Fastener Locations
A ▷ : Clip, 11 B ▷ : Clip, 6

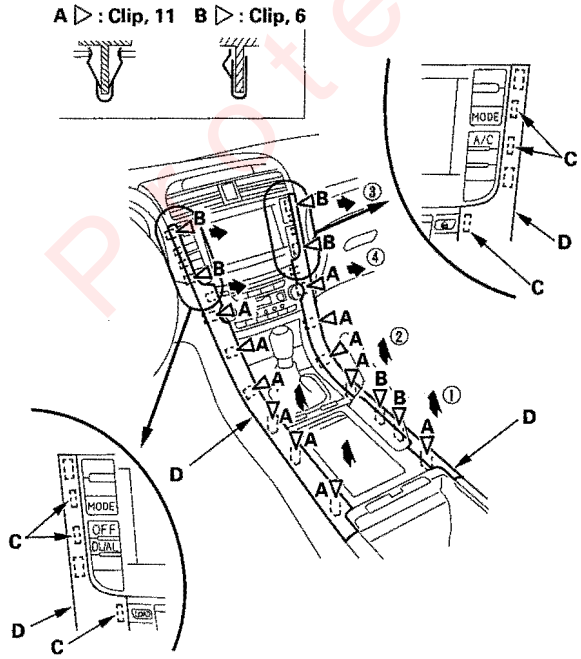

3. Open the console box lid (A) then remove the console mat (B) and screws (C, D).

Fastener Locations
C ▶ : Screw, 2 D ▶ : Screw, 2

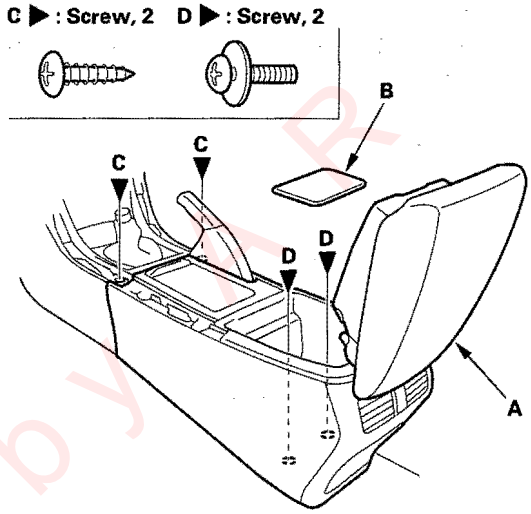

4. Slide the rear section of the center console (A) rearward to release the hooks (B).

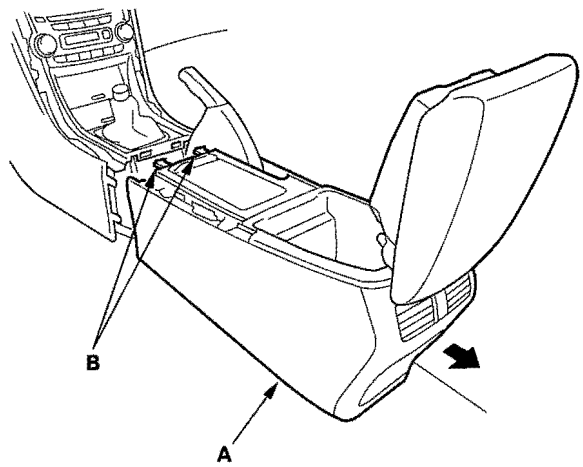

(cont'd)

Protected by MR

Center Console Rear Section Removal/Installation (cont'd)

5. Lift up the rear of the console (A). Release the harness retainer clip (B) from the air duct, and disconnect the accessary power socket connector (C) and the light bulb socket connector (D), and then remove the rear section of the center console.

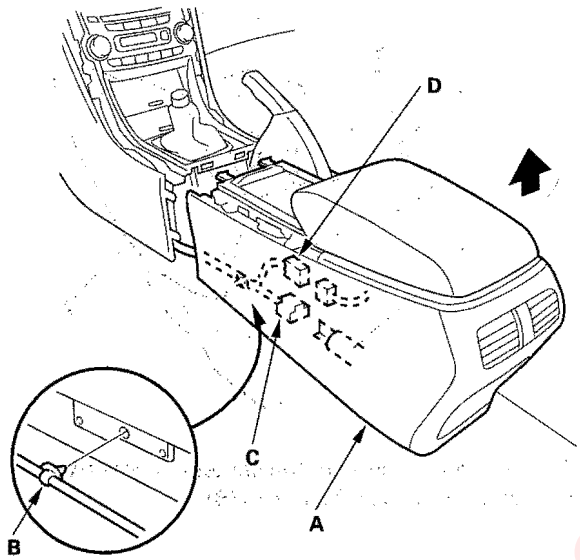

6. Install the console in the reverse older of removal, and replace any damaged clips.

Center Console Panel Removal/ Installation

Special Tools Required
KTC trim tool set SOJATP2014

NOTE:
- Use the appropriate tool from the KTC trim tool set to avoid damage when prying components.
- Take care not to scratch the front seat, dashboard and related parts.

1. Move both front seats all the way back.

2. Remove these items:
   - Center console rear section (see page 20-77)
   - Dashboard lower cover (see page 20-82)
   - Glove box housing (see page 20-84)

3. Remove the trim (A).

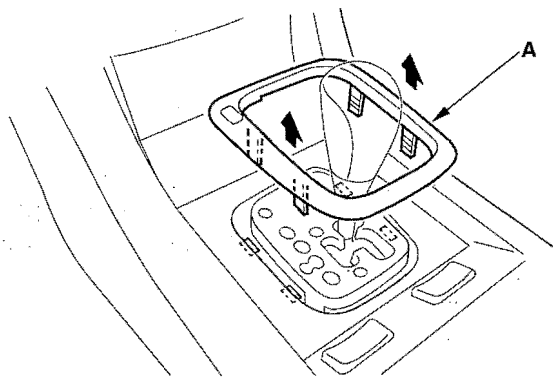

4. M/T model: Remove the insert panel (A) to release the hooks (B).

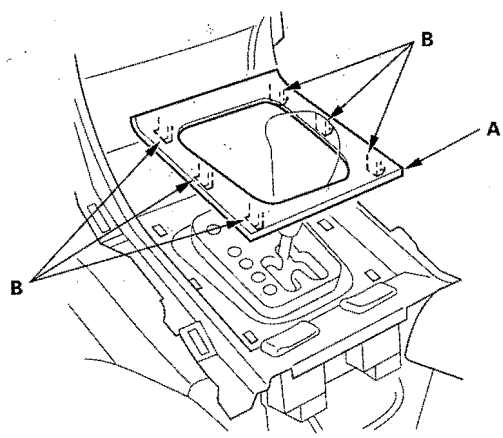

Protected by AP

5. Remove the screws (A, B), and detach the clips (C), then remove the driver's console side cover (D) and passenger's console side cover (E).

Fastener Locations
A ▶ : Bolt, 4 B ▶ : Screw, 4 C ▷ : Clip, 4

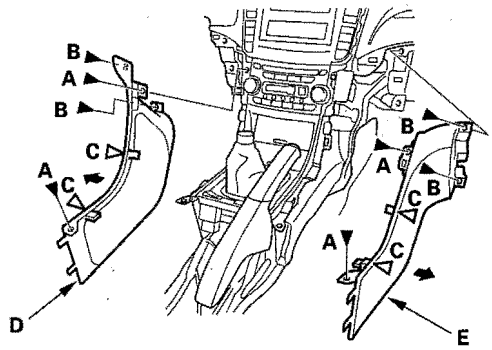

6. Pull the center console panel (A) to release the pin (B), and disconnect the accessary power socket connector (C) and seat heater switch connectors (D).

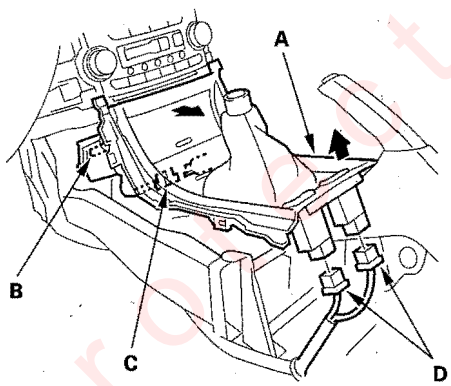

7. Turn the center console panel (A) then lift it up and away from the dashboard.

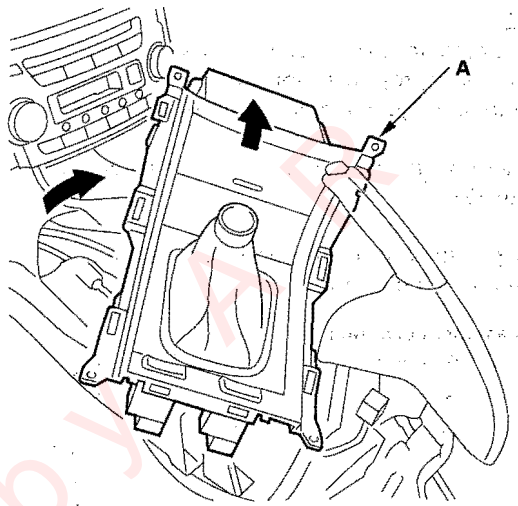

8. Install the console panel in the reverse order of removal, and note these items:

- Make sure each connector is plugged in properly.
- Replace any damaged clips.
- Push the clips and hooks into place securely.

Protected by AP

Center Console Rear Cover Replacement

Special Tools Required
KTC trim tool set SOJATP2014

NOTE:
- Take care not to scratch the console.
- Use the appropriate tool from the KTC trim tool set to avoid damage when prying components.

1. Remove the center console rear section (see page 20-77).

2. Open the armrest (A) and remove the screws, then remove the armrest.

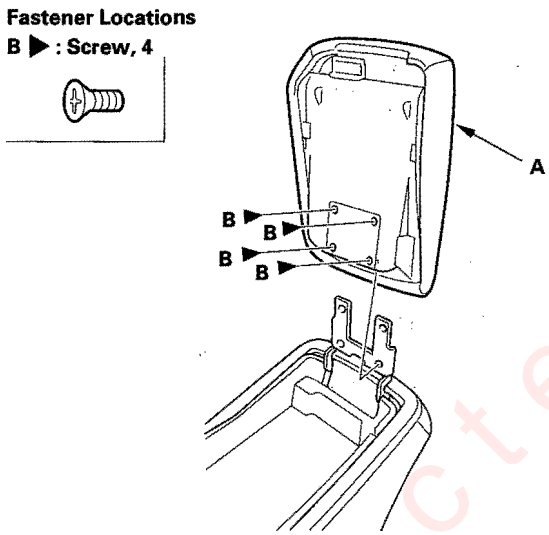

3. Detach the clips, then pull the console upper trim (A) up and forward to release the hooks (B).

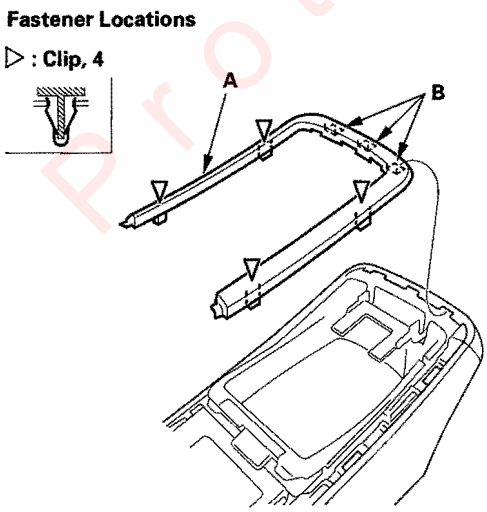

4. Remove the console pocket (A).

   1 Open the console pocket, and release the hooks (B).
   2 Pull the console pocket out to release the tabs (C).

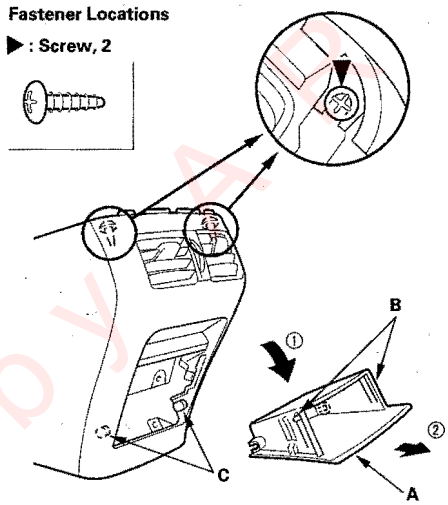

5. Loosen the screws both sides.

6. Remove the screws then remove the center console rear cover (A).

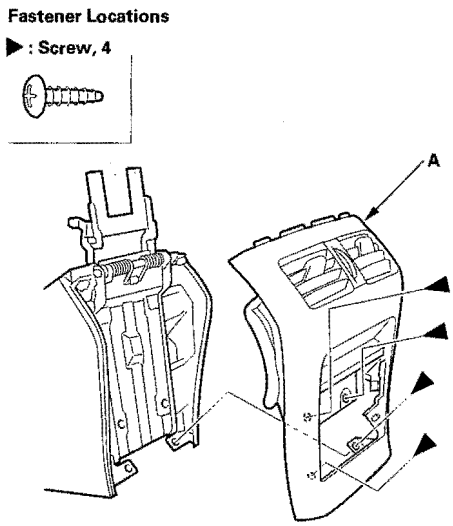

7. Install the cover in the reverse order of removal, and note these items:

   - Replace any damaged clips.
   - Push the clips into place securely.

Protected by AP

Center Console Beverage Holder Replacement

NOTE: Take care not to scratch the center console and related parts.

1. Remove the rear section of the center console (see page 20-77).
2. Disconnect the connector holder from underneath the rear section of the center console.
3. Remove the screws, then remove the center console beverage holder (A).

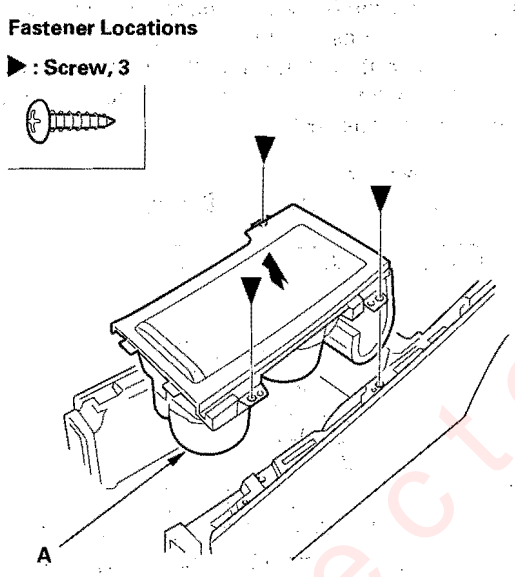

4. Install the beverage holder in the reverse order of removal.

Center Console Hinge Replacement

NOTE: Take care not to scratch the center console and related parts.

1. Remove the rear section of the center console (see page 20-77).
2. Open the armrest tray (A) and remove the screws, then remove the armrest tray.

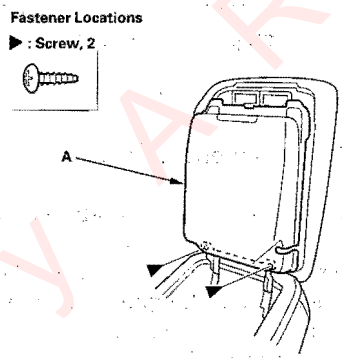

3. Remove the center console rear cover (see page 20-80), then remove the screws.

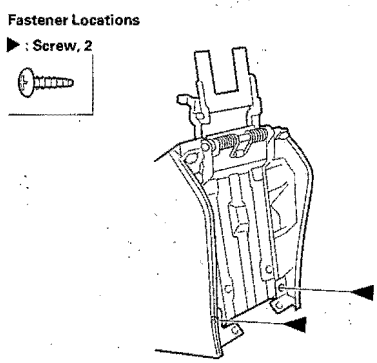

4. Remove the screws, then remove the center console hinge (A).

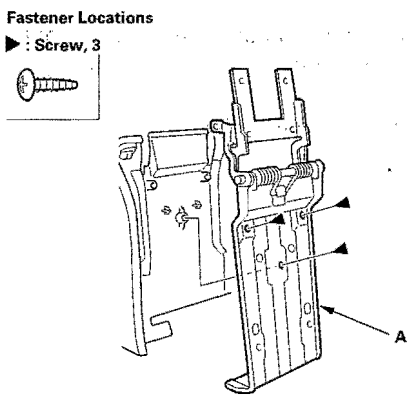

5. Install the hinge in the reverse order of removal.

Protected by A R

Instrument Panel Removal/ Installation

Special Tools Required
KTC trim tool set SOJATP2014

NOTE:
- Take care not to scratch the dashboard and related parts.
- Use the appropriate tool from the KTC trim tool set to avoid damage when prying components.

1. Tilt the steering column down.
2. Remove the instrument panel (A).
   - –1 Gently pull out along the bottom to release the clips (B, C) and hooks (D).
   - –2 Gently pull out the upper portion of the panel.
   - –3 Disconnect the dash lights brightness controller connector (E) and the SELECT/RESET switch connector (F).

Fastener Locations
B ▷: Clip, 2 C ▷: Clip, 2

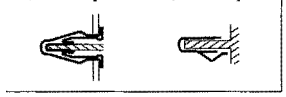

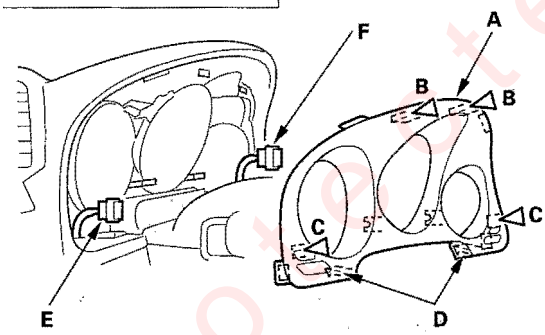

3. Install the panel in the reverse order of removal. If equipped, make sure the in-car temperature sensor connector is plugged in properly, and the air hose is connected securely.

Driver's Dashboard Lower Cover Removal/Installation

Special Tools Required
KTC trim tool set SOJATP2014

NOTE:
- Take care not to scratch the dashboard and related parts.
- Use the appropriate tool from the KTC trim tool set to avoid damage when prying components.

1. Adjust the steering column upward.
2. Remove the clip (A), and disconnect the in-car temperature sensor connector (B) and air hose (C). Gently pull out the bottom of the dashboard lower cover (D) to detach the clips (E, F), and release the pin (G) and hooks (H).

Fastener Locations
A ▷: Clip, 1 E ▷: Clip, 9 F ▷: Clip, 1

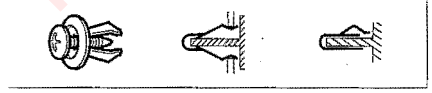

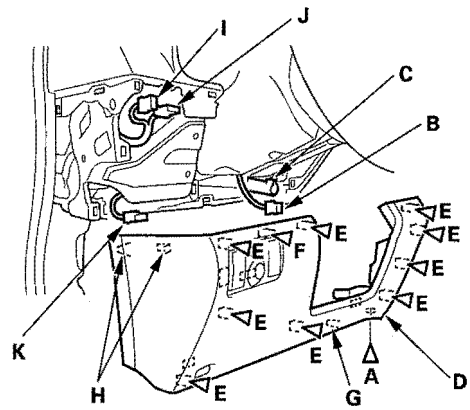

3. Disconnect the VSA OFF switch connector (I), power mirror switch connector (J), and trunk lid opener switch connector (K).
4. Install the cover in the reverse order of removal, and make sure the connectors are plugged in properly, and the air hose is connected securely.

Protected by SAR

Driver's Dashboard Under Cover Removal/Installation

NOTE: Take care not to scratch the dashboard and related parts.

1. Remove the driver's dashboard under cover (A).
   - 1 Gently pull down the rear edge to detach the clip.
   - 2 Pull the cover away to release the pins (B) from the holders (C).

Fastener Locations

▷ : Clip, 2

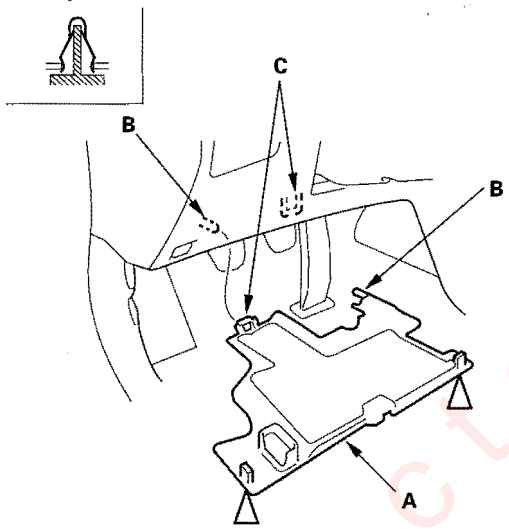

2. Install the cover in the reverse order of removal.

Upper Panel Removal/Installation

Special Tools Required
Vent panel puller 07AAC-S3VA100

NOTE: Take care not to scratch the dashboard and related parts.

1. Position a vent panel puller (A) as shown on the upper panel (B).

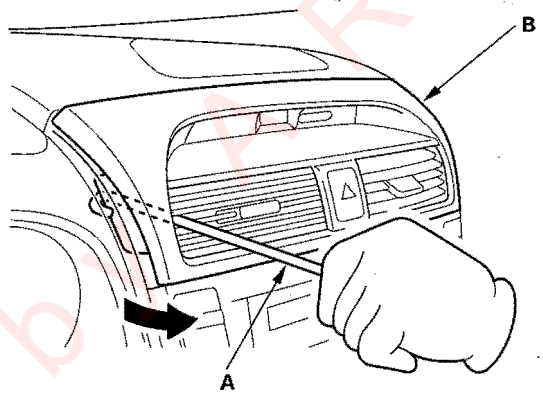

2. Carefully pull one side of upper panel (A) partially out to release clips (B, C, D), then do the same on the other side. Disconnect the hazard warning switch connector (E) and audio-HVAC subdisplay-clock connector (F), then remove the upper panel.

Fastener Locations

B ▷ : Clip, 4 C ▷ : Clip, 3 D ▷ : Clip, 4

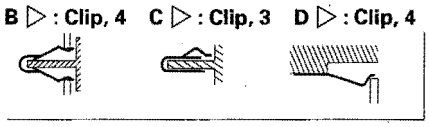

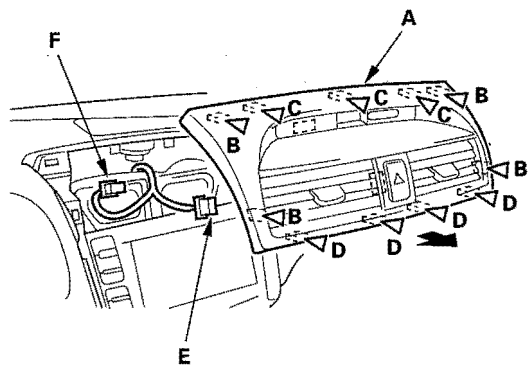

3. Install the panel in the reverse order of removal, and make sure each connector is plugged in properly.

Protected by MAR

Glove Box Housing Removal/ Installation

NOTE: Take care not to scratch the dashboard and related parts.

1. Release the clips by gently pulling the bottom of the glove box housing (A) out, and disconnect the trunk lid opener main switch connector (B) and light bulb connector (C).

Fastener Locations
▷ : **Clip, 10**

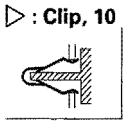

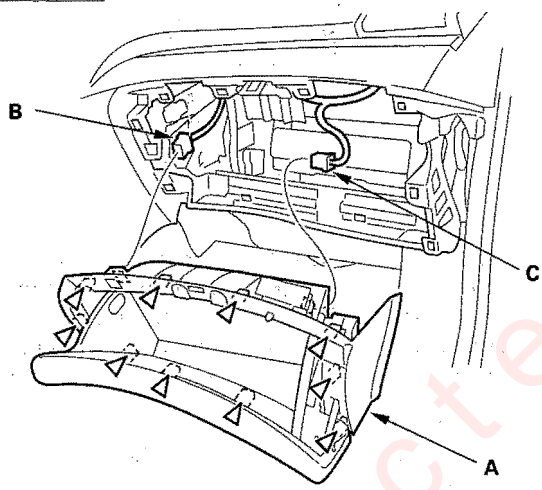

2. Replace the four clips along the top edge of the glove box housing.

3. Install the cover in the reverse order of removal, and make sure the connectors are plugged in properly.

Passenger's Dashboard Under Cover Removal/Installation

NOTE: Take care not to scratch the dashboard and related parts.

1. Remove the passenger's dashboard lower cover (A).
   1 Gently pull down the edge nearest the glove box to detach the clips.
   2 Pull the cover away to release the pin (B) from the holder (C).

Fastener Locations
▷ : **Clip, 3**

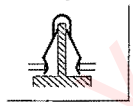

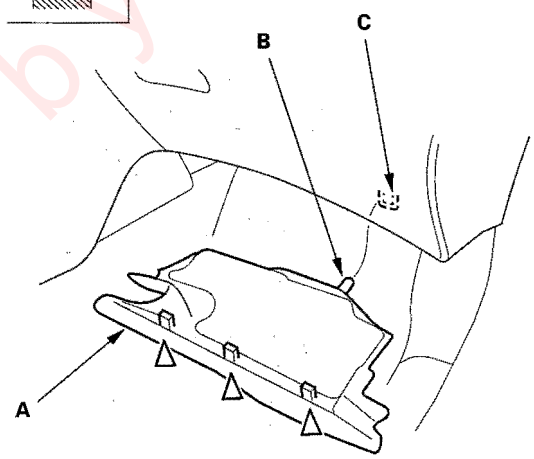

2. Install the cover in the reverse order of removal.

Protected by AR

Glove Box Removal/Installation

SRS components are located in this area. Review the SRS component locations (see page 23-11) and the precautions and procedures (see page 23-13) before performing repairs or service.

NOTE: Take care not to scratch the dashboard and related parts.

1. Detach the hook of the glove box damper (A), and remove the glove box stop (B) on each side.

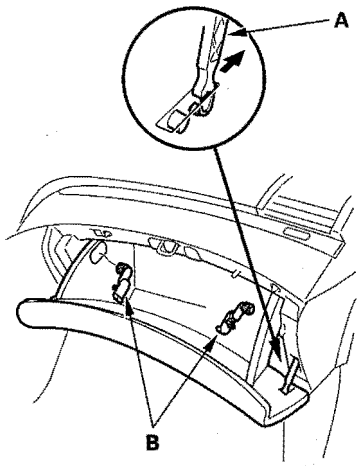

2. While holding the glove box (A), remove the screws, then remove the glove box.

Fastener Locations

▶ : Screw, 2

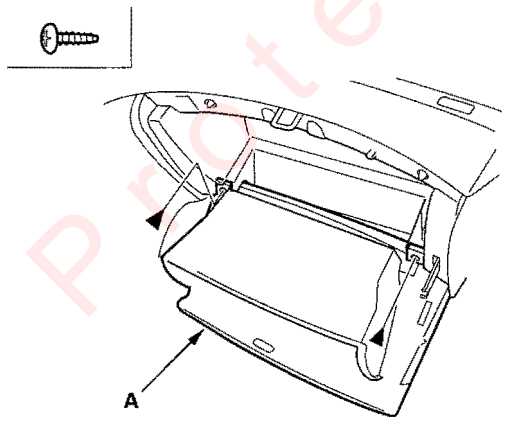

3. Install the glove box in the reverse order of removal.

Glove Box Lock Cylinder Replacement

NOTE: Take care not to scratch the glove box.

1. Remove the glove box (see page 20-85).

2. Remove the screws, then remove the glove box front trim (A) from the glove box (B).

Fastener Locations

▶ : Screw, 12

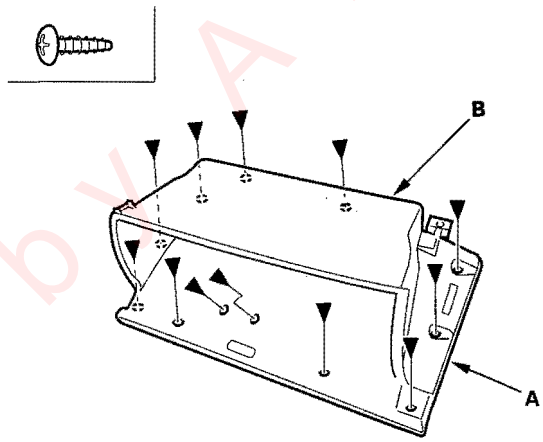

3. Remove the screws, then remove the kneebolster (A) from the glove box front trim (B).

Fastener Locations

▶ : Screw, 5

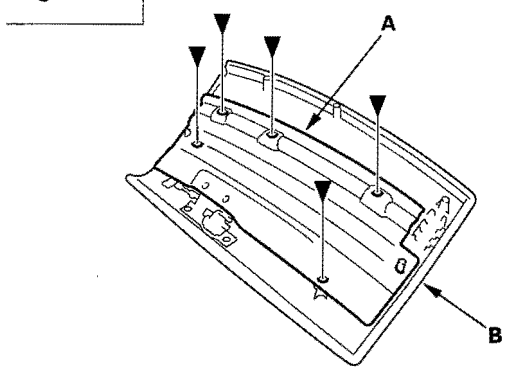

(cont'd)

Protected by AR

Glove Box Lock Cylinder Replacement (cont'd)

4. Remove the glove box lock knob body (A).

   -1 Disconnect the lock rod (B).
   -2 Gently spread the locking tabs (C) apart to release the lock knob body (A), then remove the lock knob body.
   -3 Remove the screws.

Fastener Locations

▶ : Screw, 3

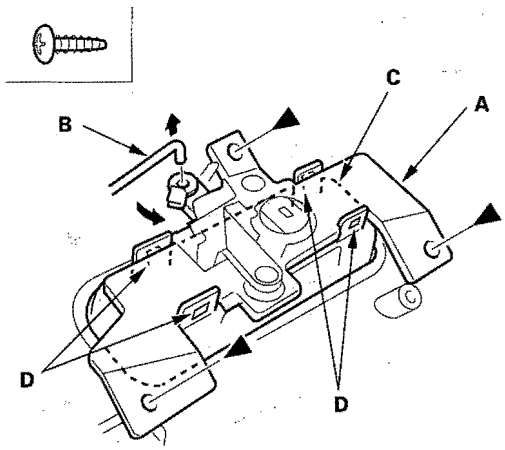

5. Remove the screws, then remove the glove box lock (A).

Fastener Locations

▶ : Screw, 3

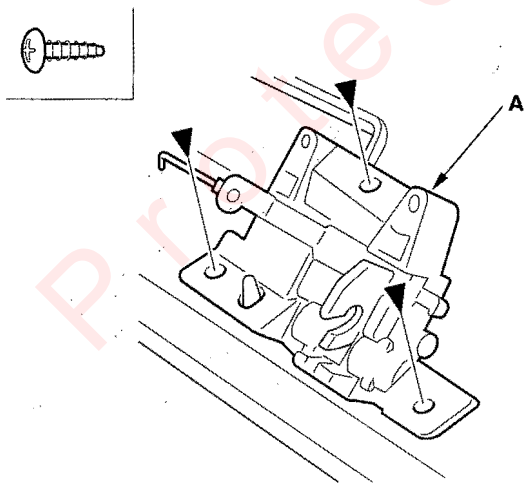

6. Remove the retainer (A), then remove the glove box lock cylinder (B).

   NOTE: Wear eye protection when doing this step.

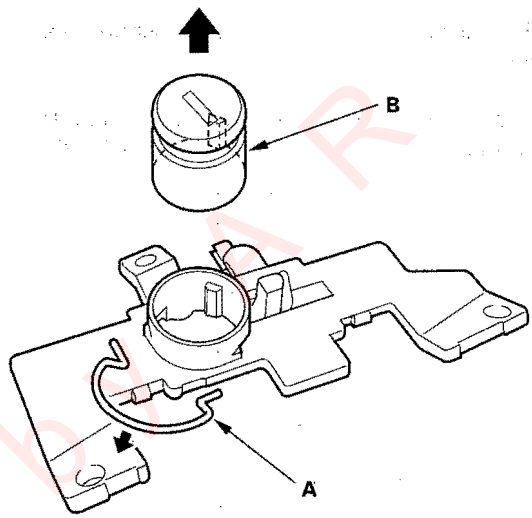

7. Install the retainer (A) into the lock body, then push the lock cylinder into the lock cylinder body until it snaps into the retainer.

8. Install the lock and lock knob body in the reverse order of removal.

Protected by AR

Glove Box Damper Replacement

NOTE: Take care not to scratch the dashboard and related parts.

1. Remove the glove box housing (see page 20-84).
2. Detach the hook of the glove box damper (A).

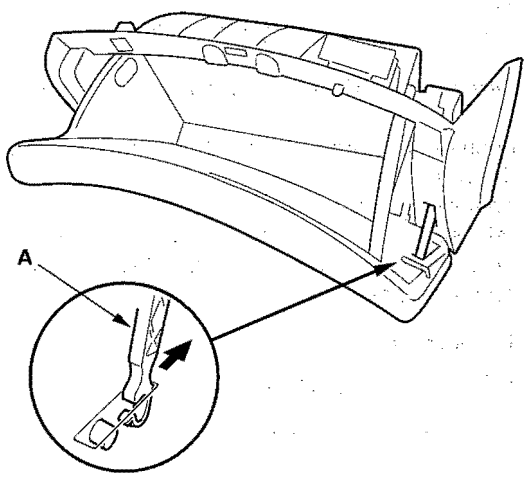

3. Remove the screws, then remove the glove box damper base (A).

Fastener Locations

▶ : Screw, 2

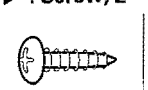

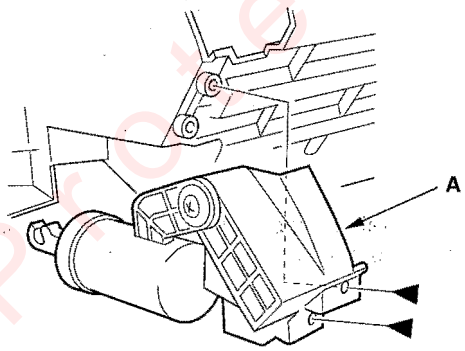

4. Remove the screws, then remove the glove box damper (A) and washer (B).

Fastener Location

▶ : Screw, 1

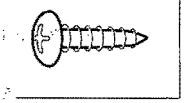

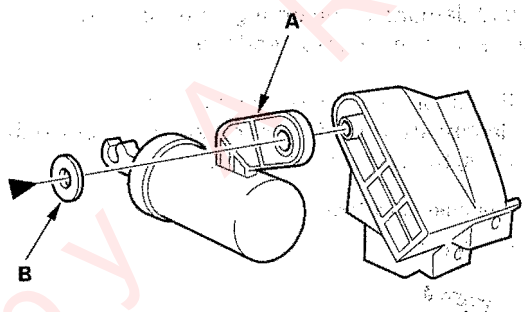

5. Install the damper in the reverse order of removal.

Protected by AR

Passenger's Dashboard Trim Removal/Installation

Special Tools Required
KTC trim tool set SOJATP2014

NOTE:
- Take care not to scratch the dashboard and related parts.
- Use the appropriate tool from the KTC trim tool set to avoid damage when prying components.
- Be very careful not to bend the trim.

1. Pry up on the outside edge of the passenger's dashboard trim (A) very carefully to detach the clips, then remove the trim.

Fastener Locations

▷ : Clip, 6

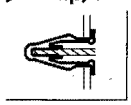

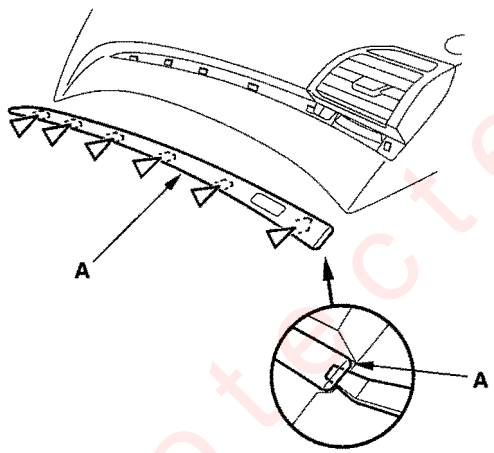

2. Install the trim in the reverse order of removal, and push the clips into place securely.

Dashboard Side Vent Removal/ Installation

Driver's

NOTE:
- Take care not to scratch the dashboard and related parts.
- Put on gloves to protect your hands.

1. Remove the driver's lower cover (see page 20-82).

2. Push on the lower hooks (A) by hand to release them. Then gently press up and sideways on the driver's side vent (B) with the palm of your hand to release outer side clips (C). While gently pressing up on the driver's side vent, pry it toward the door opening to release the clips (D).

Fastener Locations

C ▷ : Clip, 2 D ▷ : Clip, 2

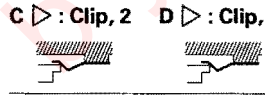

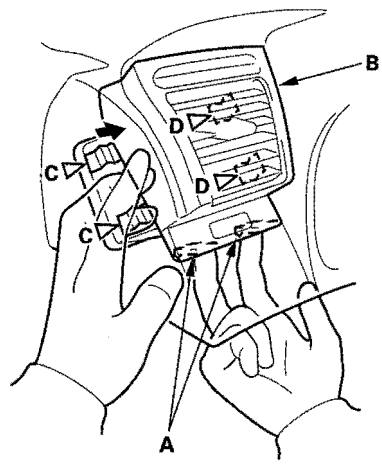

3. Reinstall the tab portions of the vent first, then push the clip portions into place securely.

Protected by

Passenger's

NOTE: Take care not to scratch the dashboard and related parts.

1. Remove the passenger's dashboard trim (see page 20-88).

2. Remove the screw (A). Then gently press up on the passenger's side vent (B) from the outer bottom edge (C) toward the inside of the car to release the outer side clips (D). While gently pressing up on the passenger's side vent, pry it toward the door opening to release the tabs (E).

Fastener Locations

A ▶ : Screw, 1 D ▷ : Clip, 2

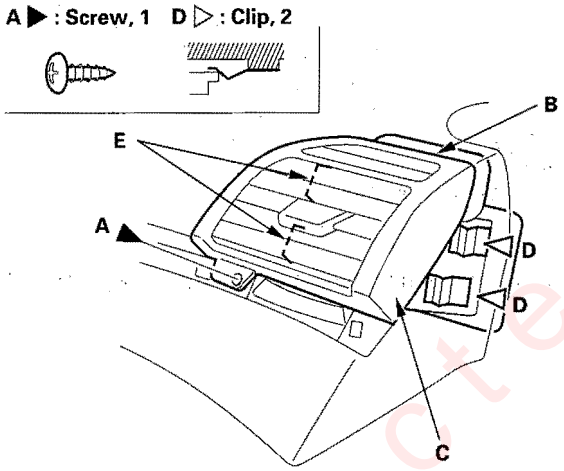

3. Reinstall the tab portions of the vent first, then push the clip portions into place securely.

Special Tools Required
KTC trim tool set SOJATP2014

SRS components are located in this area. Review the SRS component locations (see page 23-11) and the precautions and procedures (see page 23-13) before performing repairs or service.

NOTE:
- Use the appropriate tool from the KTC trim tool set to avoid damage when prying components.
- Have an assistant help you when removing and installing the dashboard.
- Take care not to scratch the dashboard, body and other related parts.
- Put on gloves to protect your hands.

1. Make sure you have the anti-theft codes for the radio and the navigation system, then write down the XM radio channel presets.

2. Disconnect the negative battery cable, and wait at least 3 minutes before beginning work.

3. Remove these items:

   - Driver's seat (see page 20-99)
   - Passenger's seat (see page 20-99)
   - Center console rear section (see page 20-77)
   - Driver's dashboard lower cover (see page 20-82)
   - Glove box housing (see page 20-84)
   - Kick panels, both sides (see page 20-62)
   - A-pillar trim, both sides (see page 20-62)
   - Steering column (see page 17-24)
   - Shift lever base, A/T model (see page 14-228)

(cont'd)

Protected by AR

Dashboard Removal/Installation (cont'd)

4. Detach the clips, then remove the rear vent duct (A).

Fastener Locations

▷ : Clip, 2

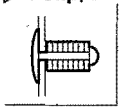

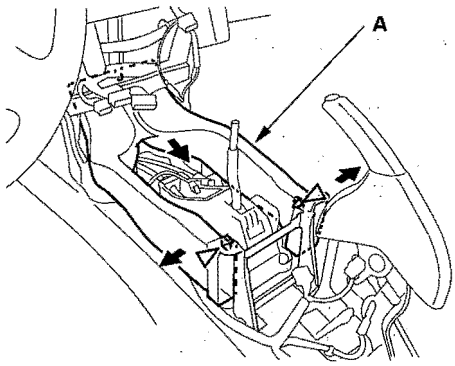

5. Remove the clips, then pull back the carpet (A).

Fastener Locations

▷ : Clip, 2

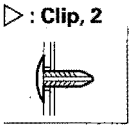

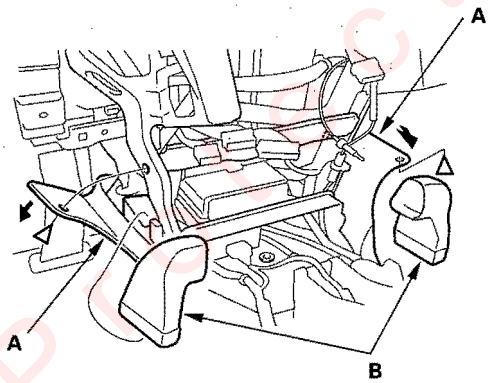

6. Remove the rear joint vent ducts (B) on both sides.

7. Disconnect the connector (A), and remove the bolts, then remove the bracket (B).

Fastener Locations

▶ : Bolt, 2

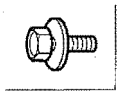

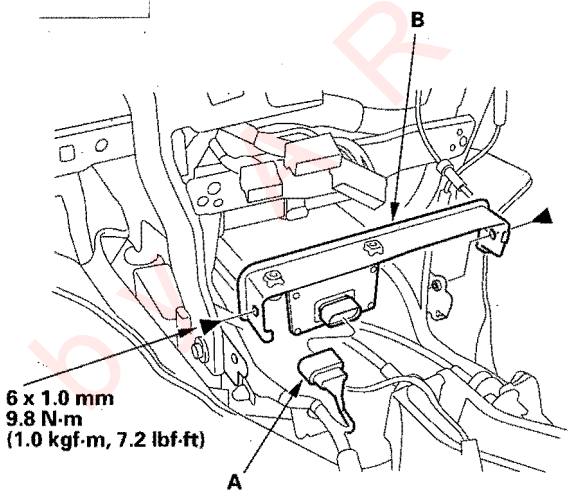

8. Remove the SRS control unit (see page 23-143).

Protected by FFR

Driver's side

9. From under the dash, disconnect the interior wire harness connectors (A), clutch switch connectors (B) (on M/T model), and brake switch connector (C), floor wire harness connectors (D), engine compartment wire harness connectors (E), and disconnect the dashboard wire harness connectors (F) from the under-dash fuse/relay box (G), then release the wire harness clips.

   NOTE: Lift the white wire harness connector locks (I) before trying to remove the connectors from the fuse box.

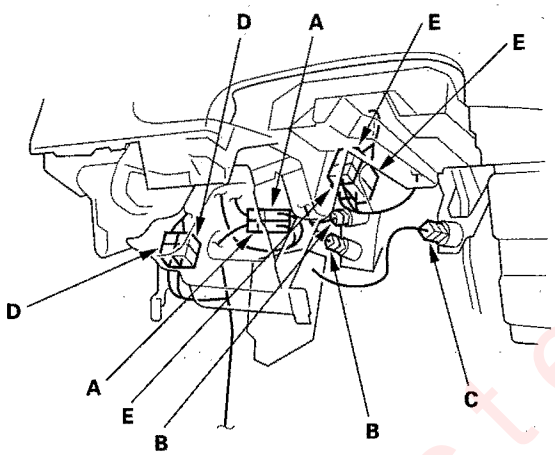

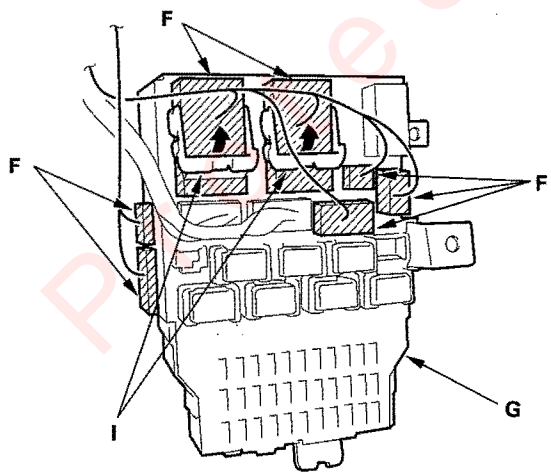

Middle portion (shift lever portion)

10. Disconnect the parking brake switch connector (A), then release the wire harness clips (B), and if applicable. Using a Torx T30 bit, remove the ground bolt (C).
    A/T models: Disconnect the parking pin switch connector (D).

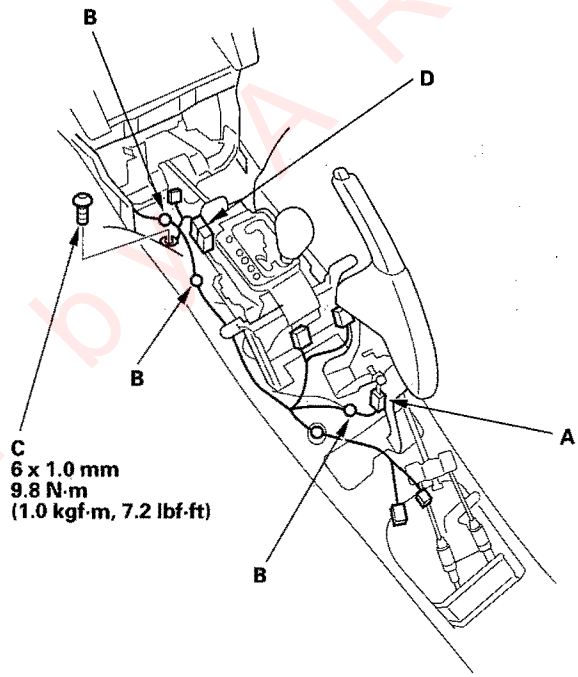

Protected by AR

(cont'd)

Dashboard Removal/Installation (cont'd)

Center (passenger's side)

11. From under the dash, disconnect the ECM/PCM connector (A), antennal lead (B), engine wire harness connector (C) and A/C subharness connector (D).
A/T models: Disconnect the shift lock solenoid connector (E).

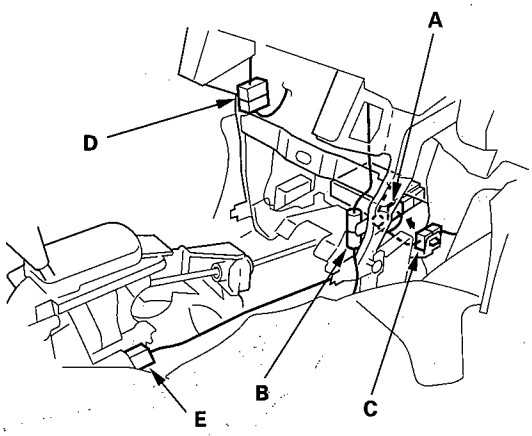

Passenger's side

12. From under the dash, disconnect the passenger's door wire harness connectors (A), the three floor wire harness connectors (B) (with navigation system) or the one floor wire harness connector (without navigation system), stereo amplifer connectors (C), and ETC unit connector (D).

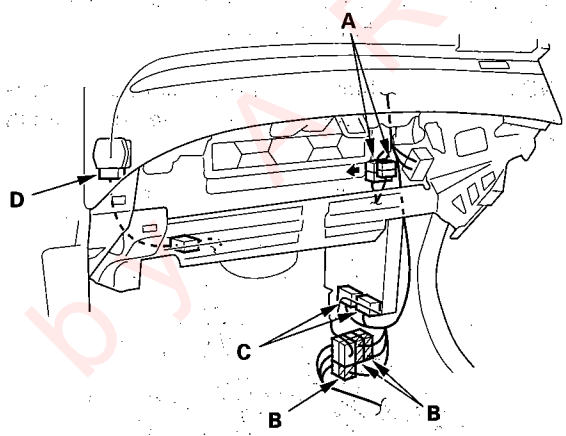

13. Detach all of the harness and connector clips.

14. Remove bolts, then remove the brake pedal support member (A).

Fastener Locations

▶ : Bolt, 2

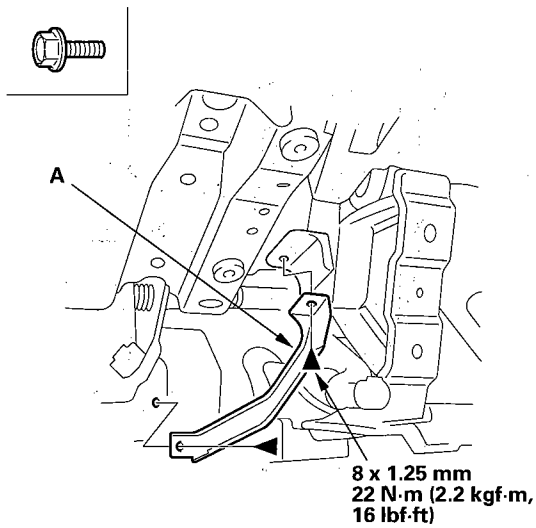

Protected by AR

15. Unbolt the parking brake handle assembly and the center console bracket. Do not disconnect the parking brake cable; move the assembly to the side of the shifter.

16. Remove the bolts (A), then remove the center bracket (B).

Fastener Locations

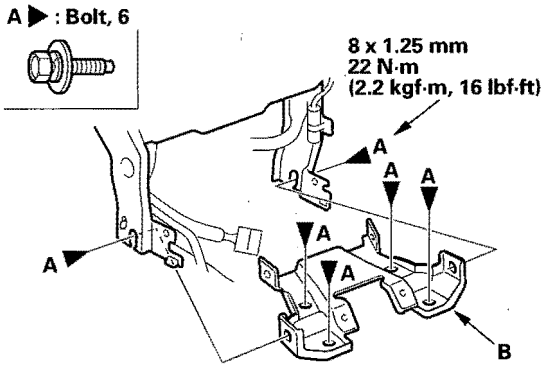

17. From outside the driver's door, remove the caps (A), then remove the bolts (B, C), and clips (D) and lift up on the dashboard (E) to release it from the guide pins (F, G).

NOTE: Before removing the dashboard, make sure all the harnesses have been disconnected.

Fastener Locations

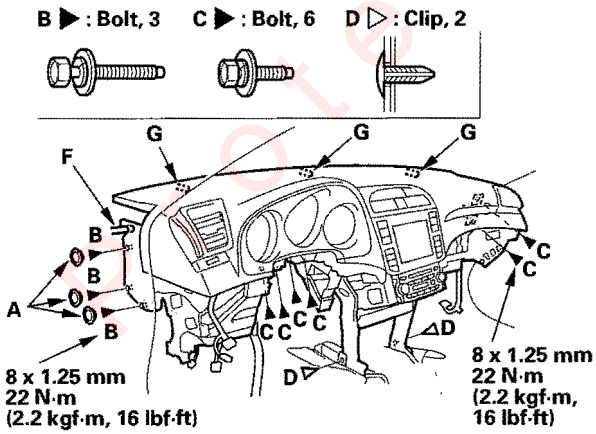

18. Carefully remove the dashboard through the front door opening.

NOTE: Lay the dashboard on the front or back. Do not rest it on the lower console opening or you may damage it.

19. Install the dashboard in the reverse order of removal, and note these items:

- Reinstall the center bracket on the center frame, and slightly tighten the mounting bolts. Reinstall the dashboard on the body. After tightening the dashboard mounting bolts and nut, tighten the center bracket mounting bolts and center frame mounting bolts.
- Make sure the dashboard fits onto the guide pins correctly.
- Apply liquid thread lock to the bolts securing the center bracket and the dashboard before reinstallation.
- Before tightening the bolts, make sure the wire harnesses are not pinched.
- Make sure the connectors are plugged in properly, and the antenna lead and air hose are connected properly.
- Reconnect the negative cable to the battery.
- Enter the anti-theft codes for the radio and the navigation system, then enter the customer's XM radio channel presets.
- Set the clock.
- Check the parking brake adjustment, and adjust if necessary.
- Check for any DTCs that may have been set during repairs, and clear them.

Protected by R

Steering Hanger Beam Replacement

NOTE: Put on gloves to protect your hands.

1. Remove the dashboard (see page 20-89).
2. Remove the these items from the dashboard:
   - Gauge control module (see page 22-265)
   - Audio-HVAC-display module (see page 22-437)
   - Center speaker (see page 22-421)
3. Remove the tweeters (A) on both sides by releasing the hooks (B) and detaching the tweeter connectors (C).

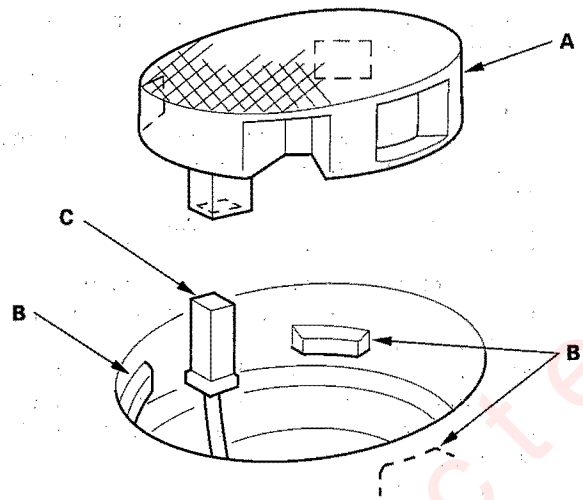

4. From the front of the dashboard, detach the harness clip (A).

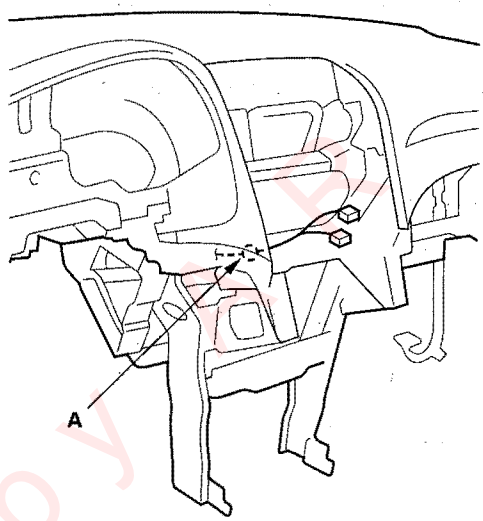

5. Remove the glove box striker (A).
   1. Remove the screws securing the glove box striker.
   2. Detach the harness clip (B) from the glove box striker.

Fastener Locations

▶: Screw, 3

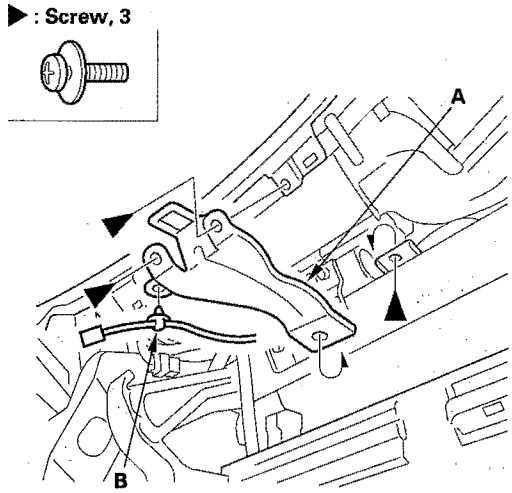

Protected by

6. Remove the nuts, then remove the attach bracket (A).

Fastener Locations

●: Nut, 6

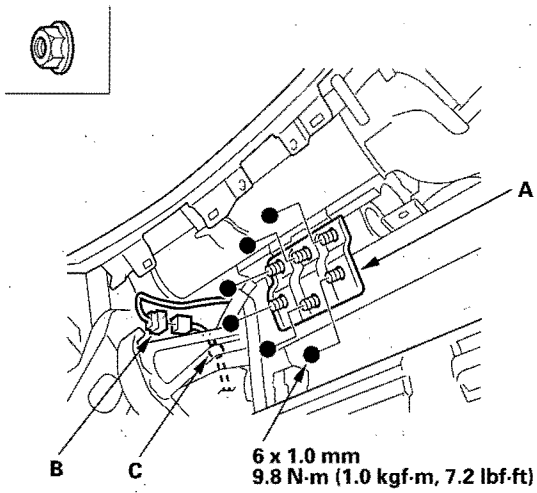

7. Disconnect the passenger's airbag connector (B), and detach the harness clip (C).

8. From the back of the dashboard. Detach the harness clip (A) on the passenger's side.

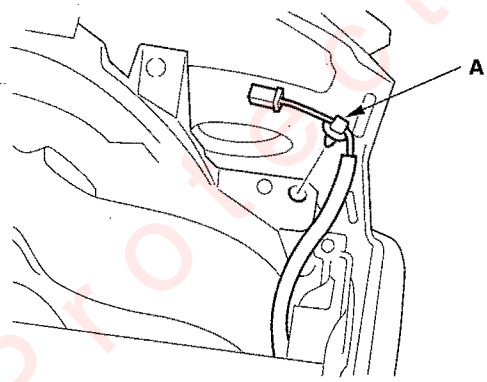

9. From the back of the dashboard. Disconnect the sunlight sensor connector (A) and detach the harness clips (B).

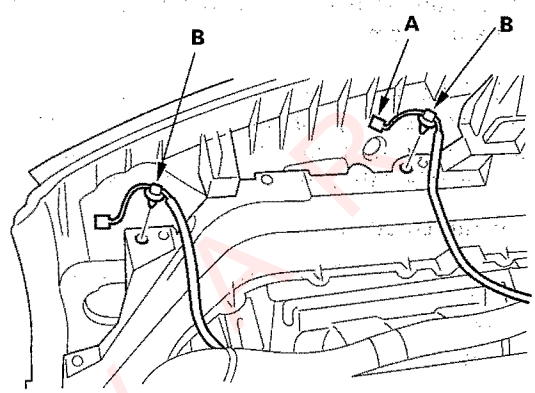

Protected by

(cont'd)

Steering Hanger Beam Replacement (cont'd)

10. Remove the bolts (A) and screws (B, C) securing the dashboard (D) and steering hanger beam (E), then separate them.

    NOTE: Some screws and bolts may be difficult to see because they are hidden behind wire harnesses. If the cover does not come off easily, look for a screw or bolt that you might have missed.

Fastener Locations

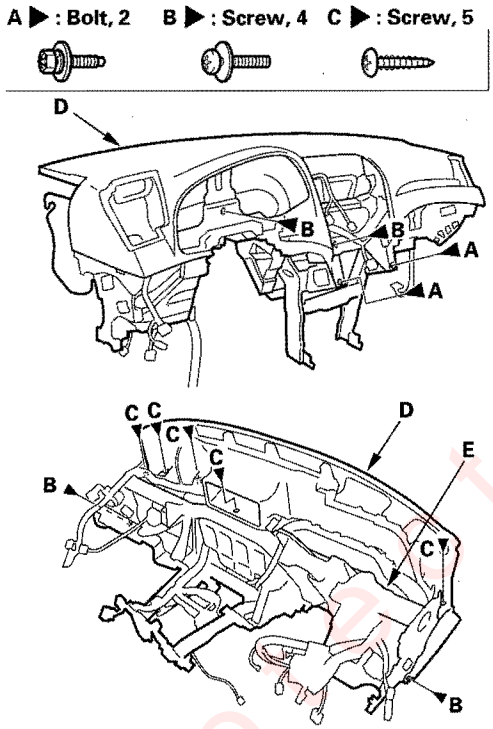

11. Install the beam in the reverse order of removal, and note these items:

    - Make sure the dashboard wire harness (F) is not pinched.
    - Make sure the connectors are plugged in properly.

Dashboard Upper Panel Removal/ Installation

SRS components are located in this area. Review the SRS component locations (see page 23-11) and the precautions and procedures (see page 23-13) before performing repairs or service.

NOTE: Put on gloves to protect your hands.

1. Remove the dashboard (see page 20-89).

2. Remove the these items from the dashboard:

    - Gauge control module (see page 22-265)
    - Audio-HVAC-display module (see page 22-437)
    - Side vent, both sides (see page 20-88)
    - Tweeter, both sides (see step 3 on page 20-94)
    - Sun light sensor (see page 21-65)
    - Glove box striker (see step 5 on page 20-94)
    - Attach bracket (see step 6 on page 20-95)

3. Remove the screw, slide the passenger's A/C duct (A) inside, then lower the duct to remove it.

Fastener Location

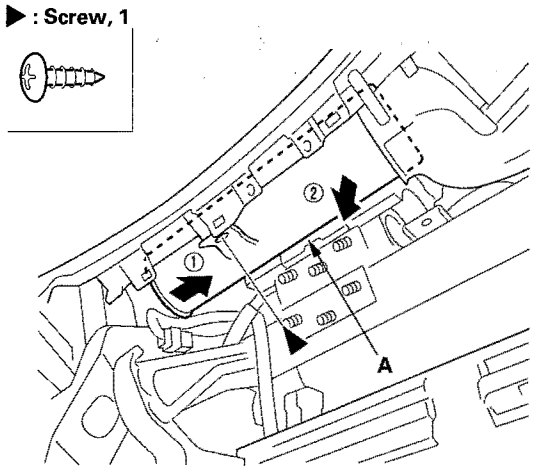

4. Remove the these items:

    - Passenger's airbag (see page 23-129)
    - Steering hanger beam (see page 20-94)

Protected by AR

5. Remove the screws, then remove the front vent duct (A).

Fastener Locations

▶ : Screw, 8

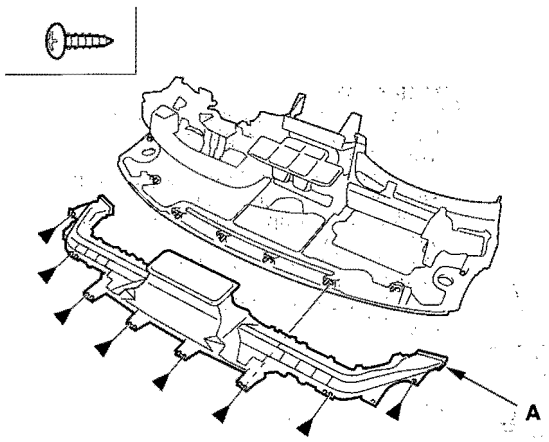

6. Remove the screws, then remove the driver's vent duct (A).

Fastener Locations

▶ : Screw, 6

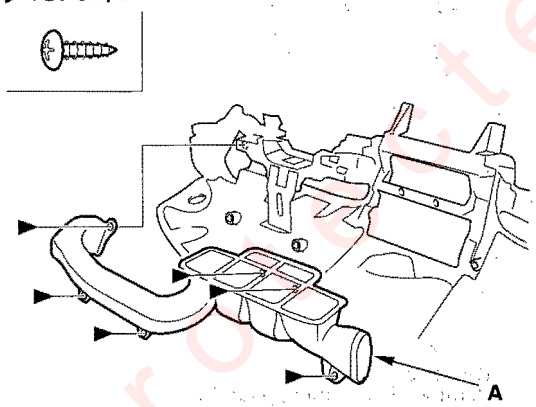

7. Remove the screws, then remove the passenger's vent duct (A).

Fastener Locations

▶ : Screw, 3

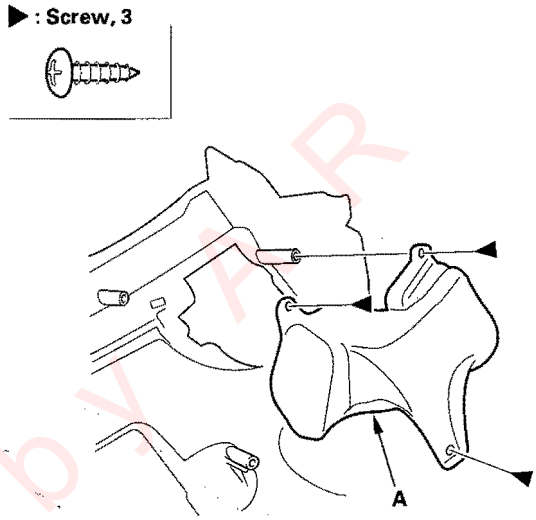

8. Install the dashboard upper panel in the reverse order of removal.

Protected by AR

Component Location Index

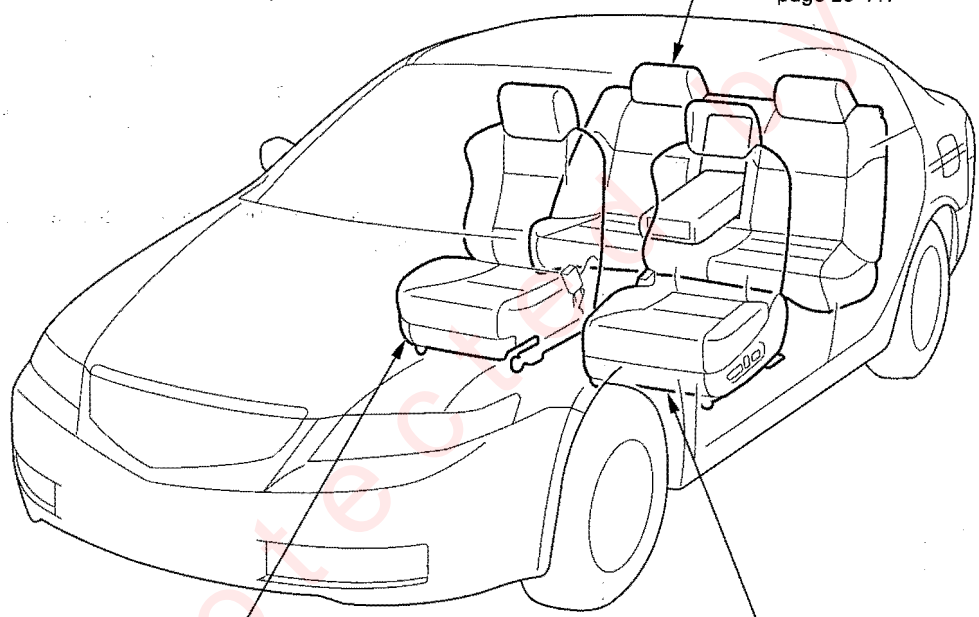

REAR SEAT
Removal/Installation, page 20-112
Rear Seat Armrest Replacement, page 20-113
Trunk Pass-through Cover Key Cylinder Replacement, page 20-113
Trunk Pass-through Cover Replacement, page 20-114
Seat-back Cover Replacement, page 20-115
Seat Cushion Cover Replacement, page 20-117

FRONT SEAT
(Passenger's)
Removal/Installation, page 20-99
Disassembly/Reassembly-4-Way Power, page 20-101

FRONT SEAT
(Driver's)
Removal/Installation, page 20-99
Disassembly/Reassembly-10-Way Power, page 20-102
Recline Motor Replacement, page 20-104
Lumbar Support Replacement page 20-105
Seat Cover Replacement, page 20-107

Protected by AR

Front Seat Removal/Installation

Special Tools Required
KTC trim tool set SOJATP2014

For some models: SRS components are located in this area. Review the SRS component locations (see page 23-11) and the precautions and procedures (see page 23-13) before performing repairs or service.

NOTE:
- Use the appropriate tool from the KTC trim tool set to avoid damage when prying components.
- Take care not to scratch the body or tear the seat covers.
- Put on gloves to protect your hands.
- DTC codes will set if the ignition is turned ON (II) with the seats removed.

1. Make sure you have the anti-theft codes for the radio and the navigation system, then write down the XM radio channel presets.

2. Tilt the steering wheel all the way up, and telescope it all the way in.

3. Slide the seat all the way forward, and remove the seat track end covers from the back of the seat tracks: right outer cover (A), center end cover (B) and left outer cover (C).

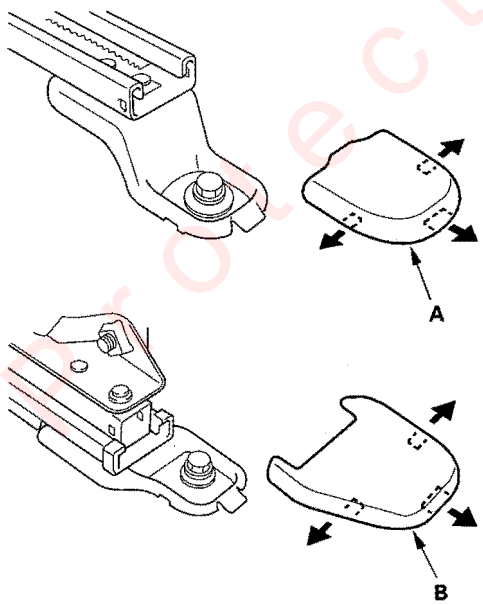

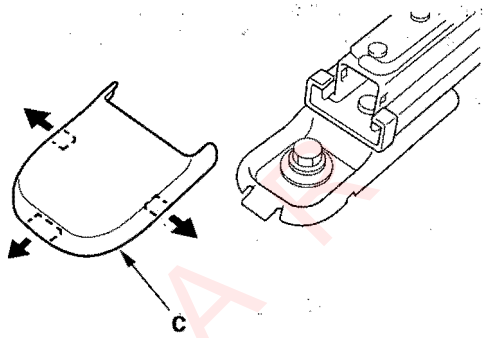

4. Slide the seat to the rear, about halfway so you can access the seat mounting bolts. If equipped with an 8-way power seat, fully raise the seat.

5. If equipped with a side airbag, disconnect the negative cable from the battery, and wait at least 3 minutes before removing the seat.

6. Remove the bolts securing the front seat (A).

Fastener Locations

▶ : **Bolt, 4**

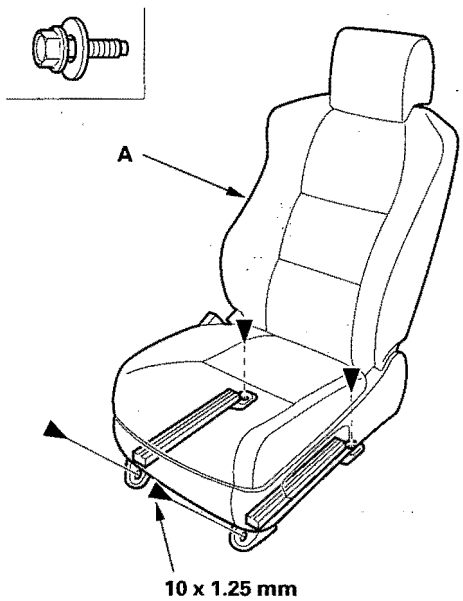

(cont'd)

Protected by A

Front Seat Removal/Installation (cont'd)

7. Lift up the front seat, then detach the harness clip (A), and disconnect the power seat harness connector (B), the side airbag connector (C) and the OPDS unit connector (D) on the 4-way power seat.

4-way power seat

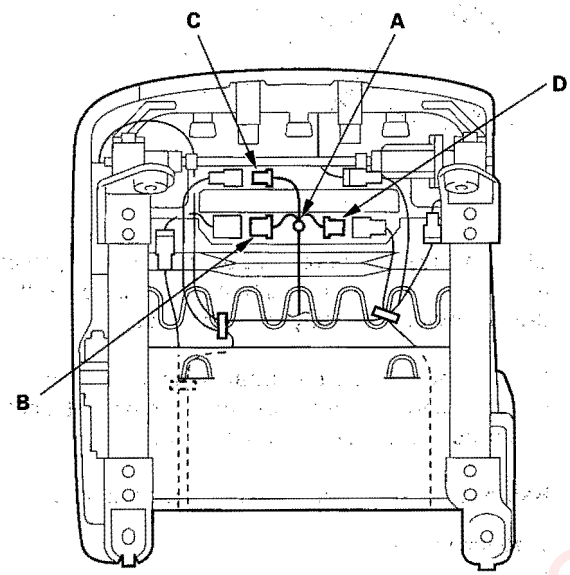

10-way power seat

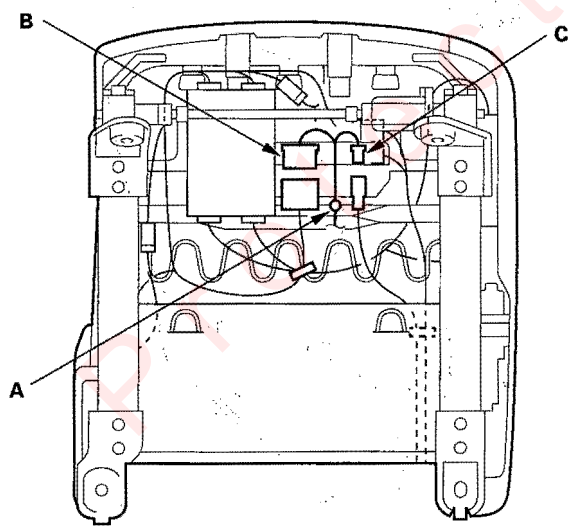

8. With the help of an assistant, carefully remove the front seat through the front door opening.

9. Install the seat in the reverse order of removal, and note these items:

- Apply liquid thread lock to the seat mounting bolts before reinstallation.
- Tighten the seat mounting bolts to the specified torque in the sequence shown. Slide the seat all the way back and tighten ① and ②, then slide it forward and tighten ③ and ④.
- Make sure each connector is plugged in properly.
- Tighten the bolts by hand first, then tighten them to specification with a torque wrench.
- Reconnect the negative cable to the battery.
- Enter the anti-theft codes for the radio and navigation system, then enter the customer's XM radio channel presets.
- Set the clock.

Fastener Locations

▶ : Bolt, 4

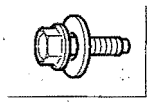

10 x 1.25 mm
34 N·m (3.5 kgf·m, 25 lbf·ft)

Front Seat Disassembly/Reassembly - 4-Way Power

Special Tools Required
KTC trim tool set SOJATP2014

For some models: SRS components are located in this area. Review the SRS component locations (see page 23-11) and the precautions and procedures (see page 23-13) before performing repairs or service.

NOTE:
- Take care not to tear the seams or damage the seat covers.
- Put on gloves to protect your hands.
- Use the appropriate tool from the KTC trim tool set to avoid damage when prying components.
- Apply multipurpose grease to the moving portion of the seat track.
- To prevent wrinkles in the seat cushion cover, stretch the material evenly over the pad.

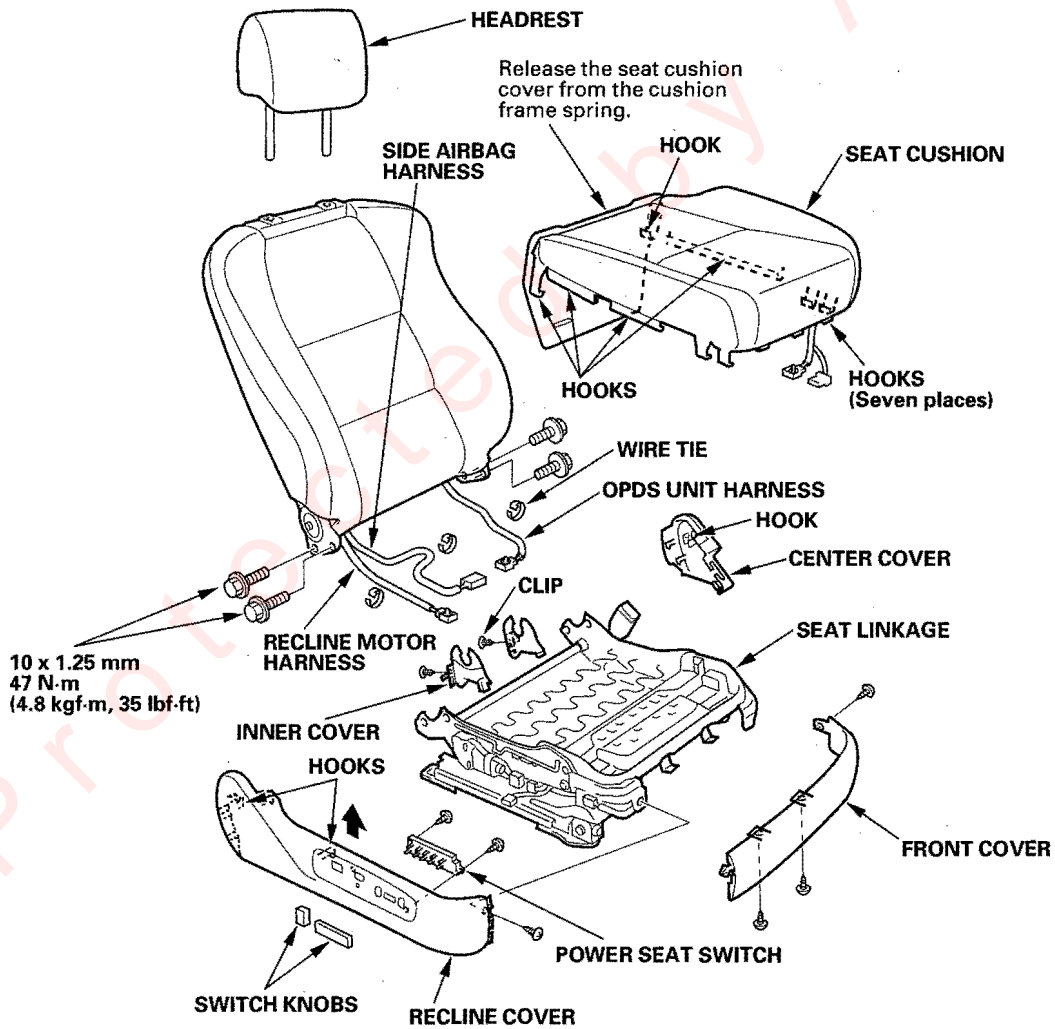

Protected by A R

Front Seat Disassembly/Reassembly - 10-Way Power

Special Tools Required
KTC trim tool set SOJATP2014

For some models: SRS components are located in this area. Review the SRS component locations (see page 23-11) and the precautions and procedures (see page 23-13) before performing repairs or service.

NOTE:
- Take care not to tear the seams or damage the seat covers.
- Put on gloves to protect your hands.
- Use the appropriate tool from the KTC trim tool set to avoid damage when prying components.
- Apply multipurpose grease to the moving portion of the seat track.
- To prevent wrinkles in the seat cushion cover, stretch the material evenly over the pad.

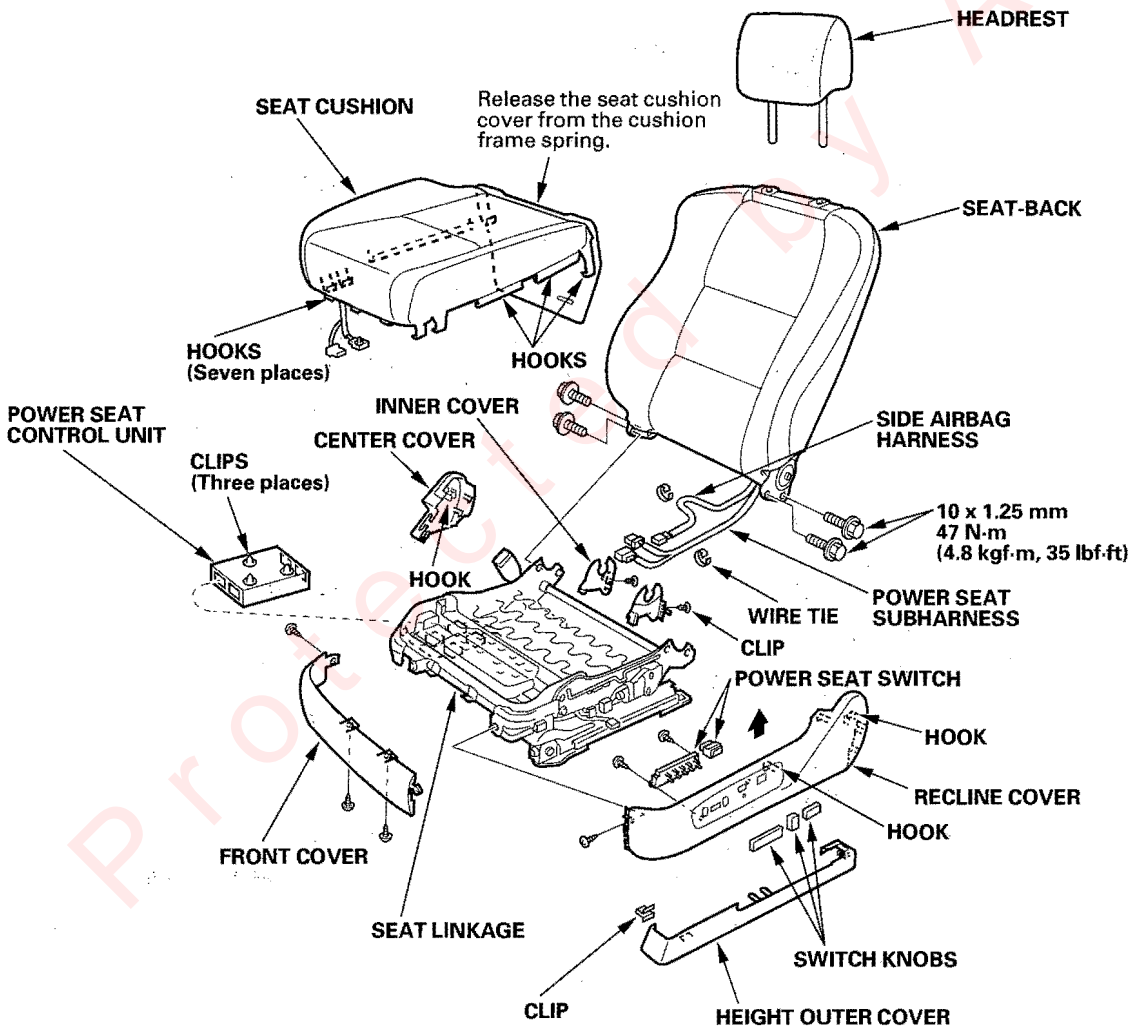

Protected by AR

Front Seat Linkage Disassembly/Reassembly - 10-Way/4-Way Power

NOTE:
- Put on gloves to protect your hands.
- To remove the slide motor and slide gearbox, slide the front seat forward fully.
- Before installing the slide motor and slide gearbox, align portion (A) as shown to align both slide gearbox positions.
- Apply multipurpose grease to the sliding and pivot portions of the linkage.
- Check operation of the recline and slide adjuster.

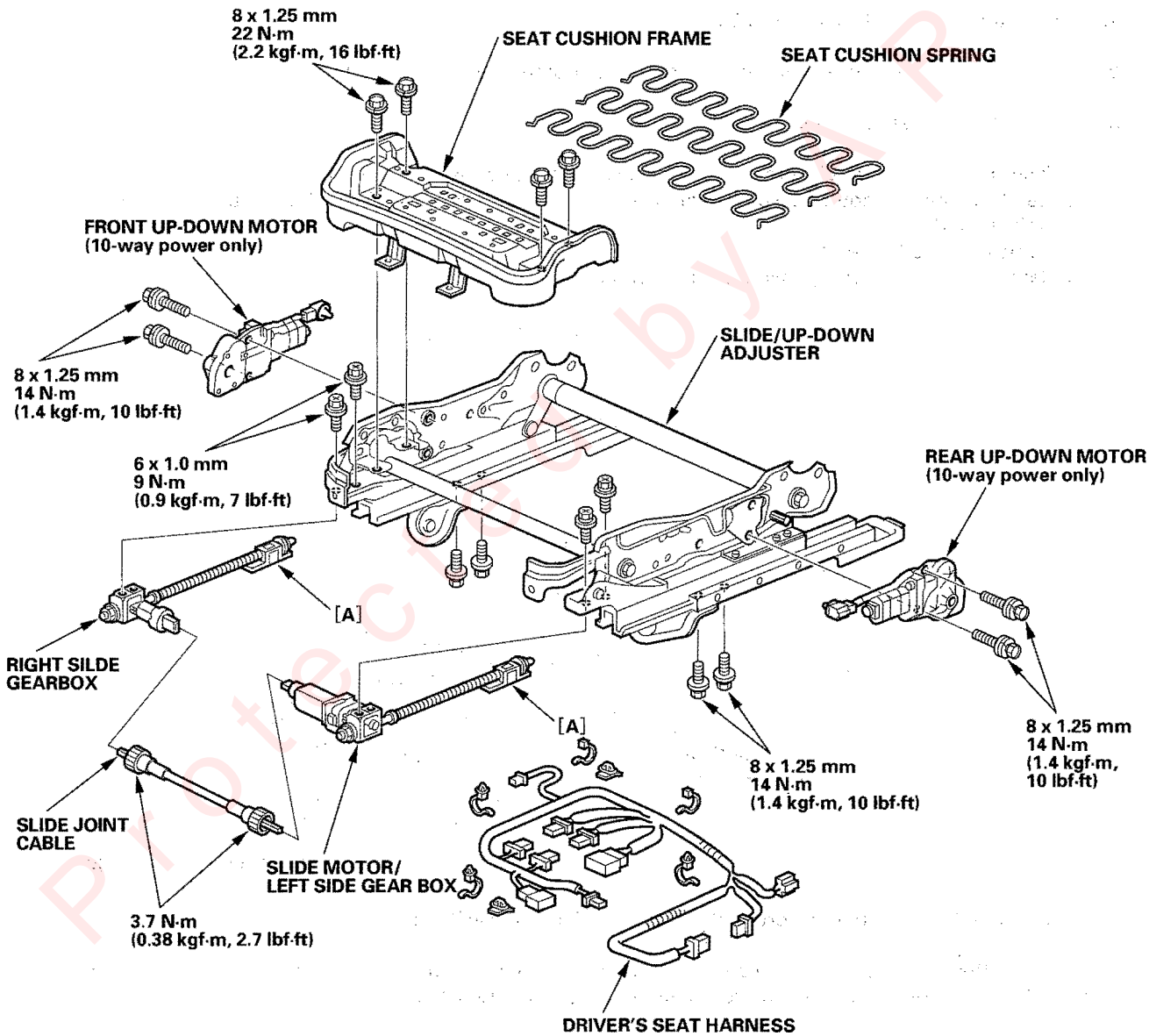

Protected by A P

Front Seat Recline Motor Replacement

10-Way/4-Way Power Seat

SRS components are located in this area. Review the SRS component locations (see page 23-11) and the precautions and procedures (see page 23-13) before performing repairs or service.

NOTE: Put on gloves to protect your hands.

1. Remove the front seat (see page 20-99).
2. Remove the seat-back cover/pad from the seat-back frame (see page 20-107).
3. Remove the recline motor (A):
   1. Release the push nut (B) from the motor side end of the connecting rod (C).
   2. Gently tap on the motor side of the connecting rod to remove it from the recline motor and both recline adjusters (D).
   3. Remove the rod cover (E).
   4. Remove the bolt, then remove the recline motor.

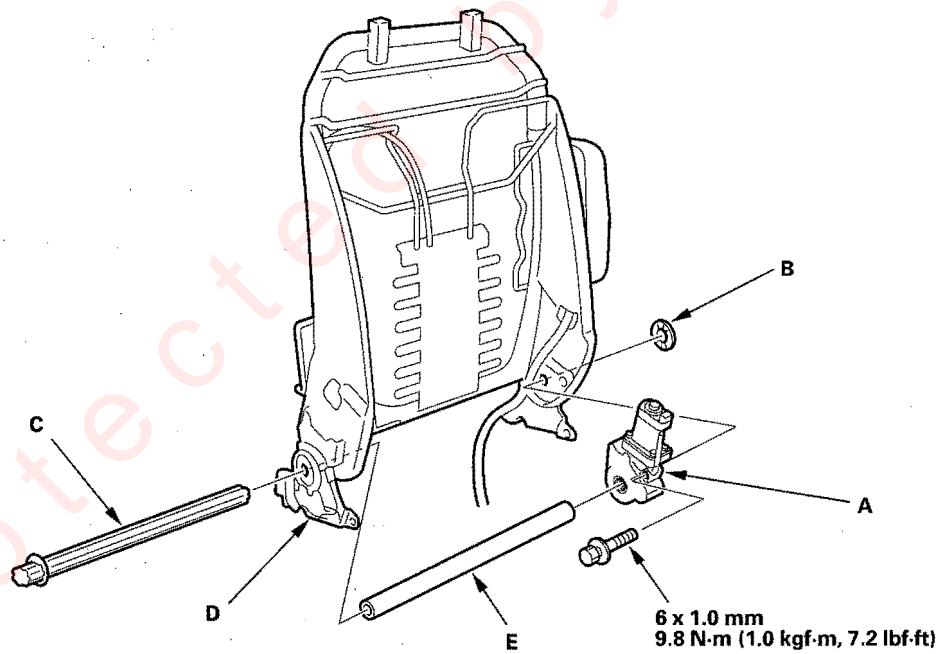

4. Install the motor in the reverse order of removal, and note these items:
   - Replace the push nut with a new one. Make sure the push nut is installed correctly.
   - Apply liquid thread lock to the motor mounting bolt before reinstallation.

Protected by AR

Front Seat Lumbar Support Replacement

For Some Models (Driver's seat)

SRS components are located in this area. Review the SRS component locations (see page 23-11) and precautions and procedures (see page 23-13) before performing repairs or service.

NOTE:
- Take care not to bend the cable.
- Take care not to tear the seams or damage the seat covers.
- Put on gloves to protect your hands.

1. Remove the back panel (see step 5 on page 20-107)

2. Release the hooks (A) and clips (B).

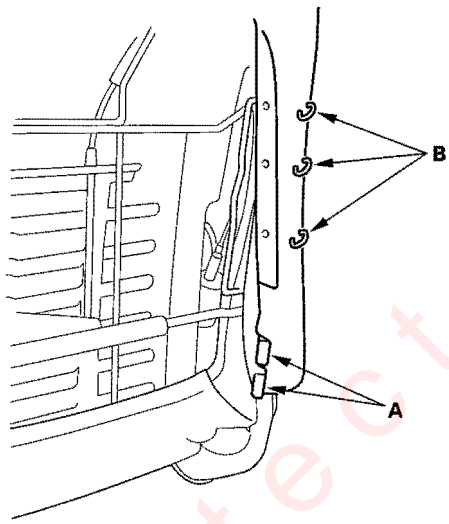

3. Turn over the seat back cover (A). Disconnect the power lumbar support motor connector (B), then remove the bolt.

Fastener Locations

▶: **Bolt, 2**

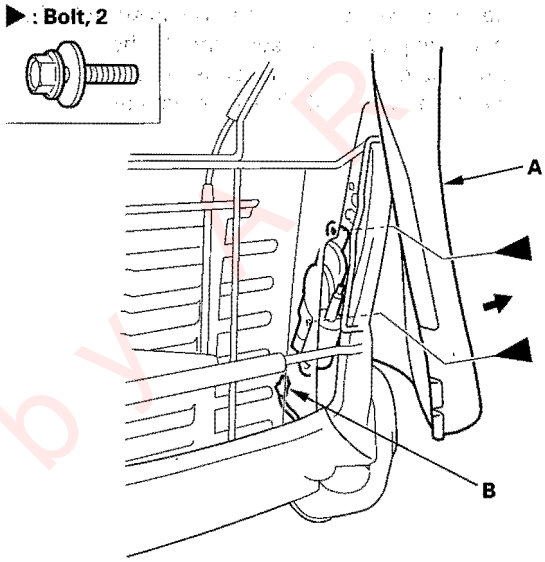

4. Remove the metal clamps (A) and detach the clips, then remove the lumbar support (B) and motor (C) as an assembly.

Fastener Locations

▷: **Clip, 2**

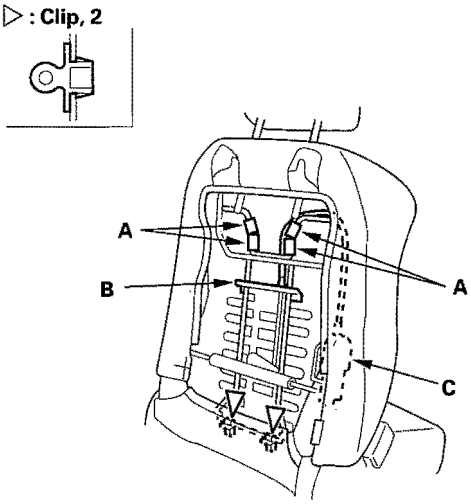

(cont'd)

Protected by

Front Seat Lumbar Support Replacement (cont'd)

5. Install the lumbar support in the reverse order of removal, and note these items:

   - Make sure the cable is connected securely.
   - To prevent wrinkles when installing a seat-back cover, make sure the material is stretched evenly over the pad before securing the hook strips.
   - Replace the back panel clips with new ones.
   - Replace the metal clips with new ones.

Protected by A R

Front Seat Cover Replacement

SRS components are located in this area. Review the SRS component locations (see page 23-11) and the precautions and procedures (see page 23-13) before performing repairs or service.

NOTE:
- Take care not to tear the seams or damage the seat covers.
- Put on gloves to protect your hands.

Seat-back Cover

1. Remove the front seat (see page 20-99).

2. Remove the headrest.

3. From under the seat cushion, disconnect the 4-way power seat-back heater connector (A) on the 10-way power seat.
   Detach the side airbag connector clip (B), recline motor connector clip (C) and OPDS unit connector clip (D) on the 4-way power seat. Release the seat cushion cover (E) and hooks (F) from the seat cushion frame spring (G), then pull the cover back, and remove the clamps (H).

4-way power seat

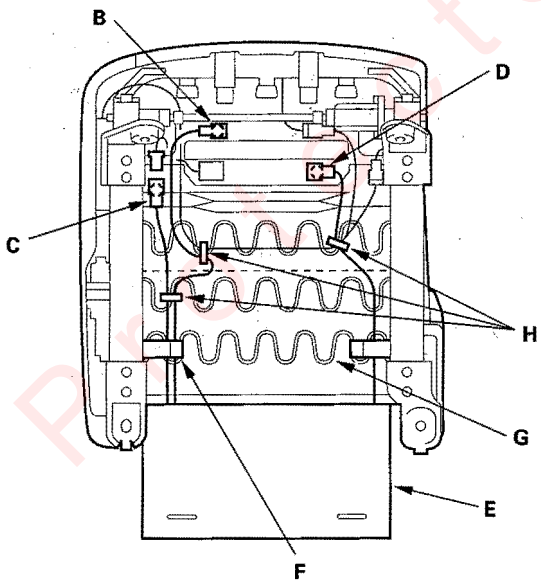

10-way power seat

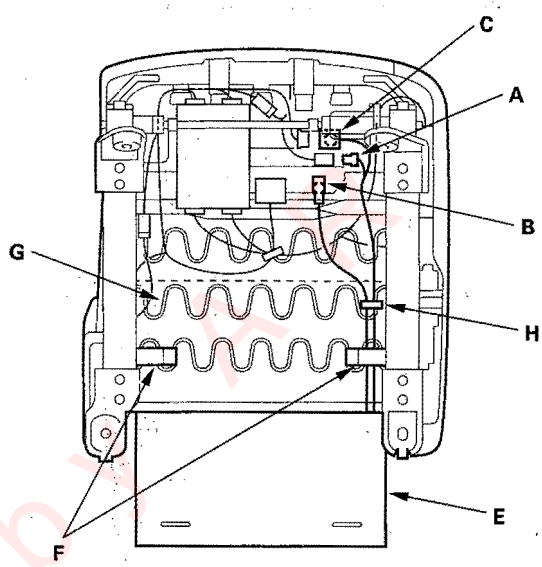

4. Remove these items from the front seat, then remove the seat-back, 4-way power seat (see page 20-101), 10-way power seat (see page 20-102):

   - Recline cover
   - Center cover

5. With side airbag: Detach the clips and hooks (A) by pulling the bottom of the back panel (B) back, then pull the panel upward to release the hooks (C) from the seat back frame, and remove the panel.

Fastener Locations

▷ : Clip, 2

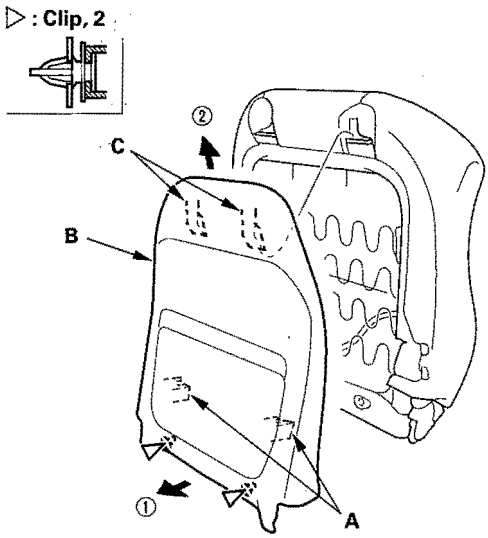

(cont'd)

Reprinted by Mitchell

Front Seat Cover Replacement (cont'd)

6. Remove the clips (A) and release the hook strips (B), then loosen the seat-back cover (C).

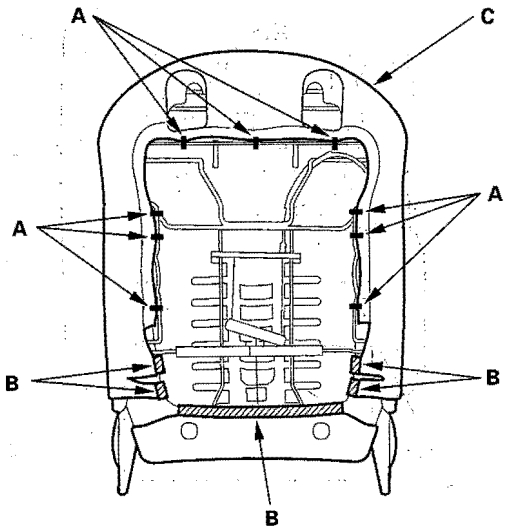

7. 4-way power seat: Pull the recline motor harness (A), side airbag harness (B) and OPDS unit harness (C) out through the holes (D) in the seat-back cover.

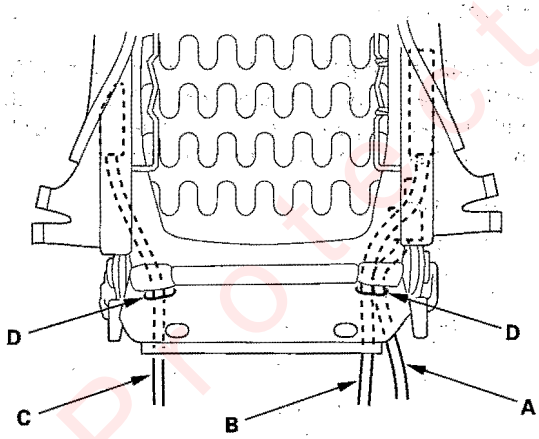

8. 10-way power seat: Disconnect the seat-back heater connector (A). Pull the power seat subharness (B) and side airbag harness (C) out through the hole (D) in the seat-back cover.

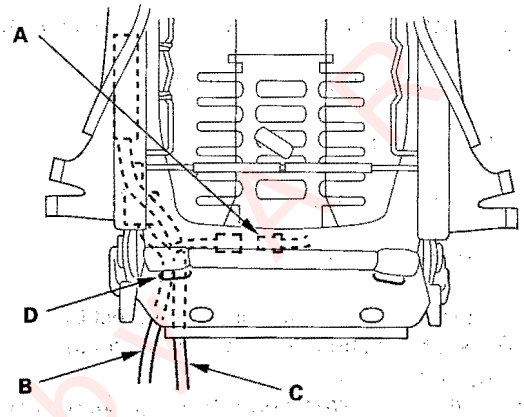

9. With side airbag: Release the front hook (A) and rear hook (B) of the reinforcing cloth (C) from seat-back frame (D).

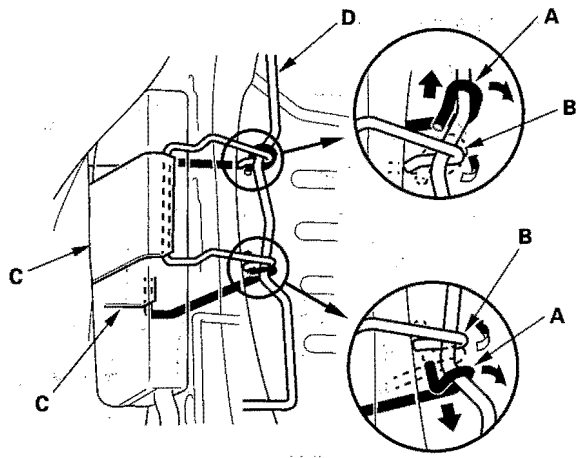

Protected by

10. Pull out the headrest guides (A) while pinching the end of the guides, and remove them.

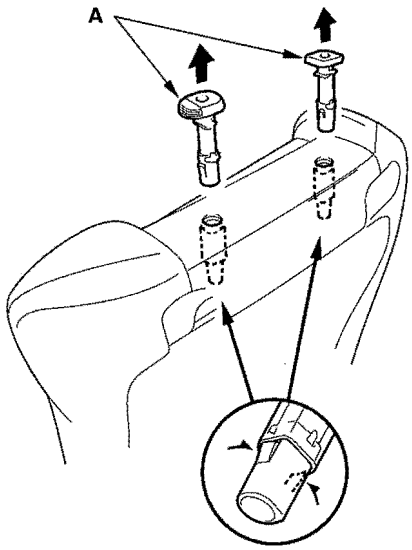

11. Pull back the edge of the seat-back cover all the way around, and release the clips (A) and fastener (B), then remove the seat-back cover.

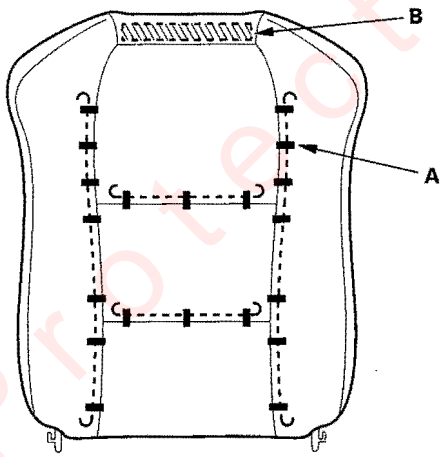

12. Install the cover in the reverse order of removal, and note these items:

- Reinitialize the OPDS control unit (see page 23-26).
- To prevent wrinkles when installing a seat-back cover, make sure the material is stretched evenly over the pad before securing the clips, hooks, and hook strips.
- Replace any clips you removed with new ones (A). Install them with commercially available upholstery ring pliers (B).
- Reinstall the front hook (C) and rear hook (D) of the reinforcing cloth (E) securely.
- Use only original Honda replacement seat-back covers.
- If equipped, make sure the recline motor harness, side airbag harness, seat-back heater harness, and OPDS unit harness (passenger's seat) are routed properly.

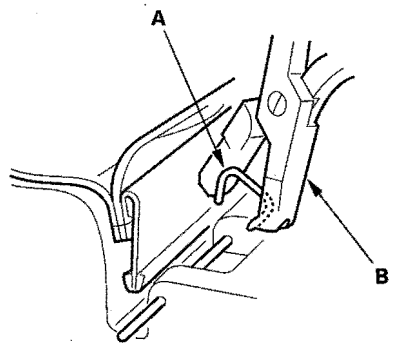

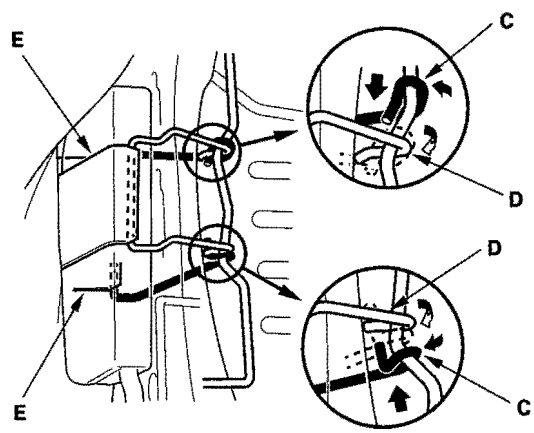

(cont'd)

Protected by

Front Seat Cover Replacement (cont'd)

Seat Cushion Cover

1. Remove the front seat (see page 20-99).
2. 10-way power seat: From under the seat cushion, detach the recline motor connector clip, if equipped, the side airbag connector clip and the seat heater connector clip. Release the seat cushion cover from the seat cushion frame spring, then pull the cover back, and remove the clamps.
3. Remove these items from the front seat, then remove the seat-back, 4-way power seat (see page 20-101), 10-way power seat (see page 20-102):
   - Recline cover
   - Center cover
   - Front cover
4. Remove the seat-back (see page 20-102).
5. Release the hook strips (A) from both sides of the seat cushion.

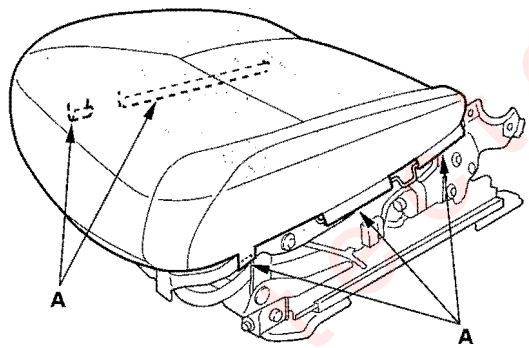

6. Pull back the seat cushion cover (A), and release the hooks (B) from under the seat cushion.

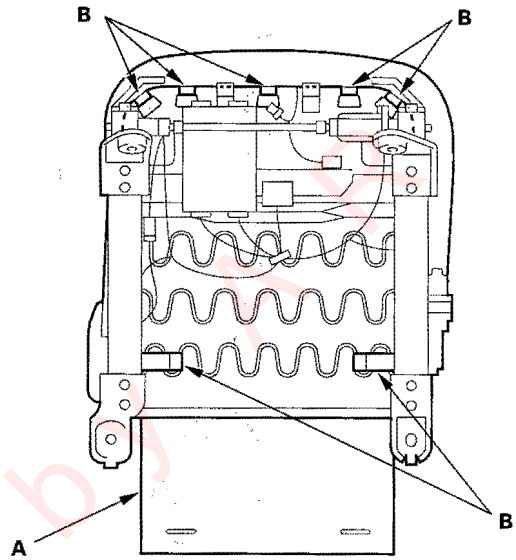

Processed by

7. Pull back the edge of the seat cushion cover all the way around, and release the clips (A), then remove the seat cushion cover.

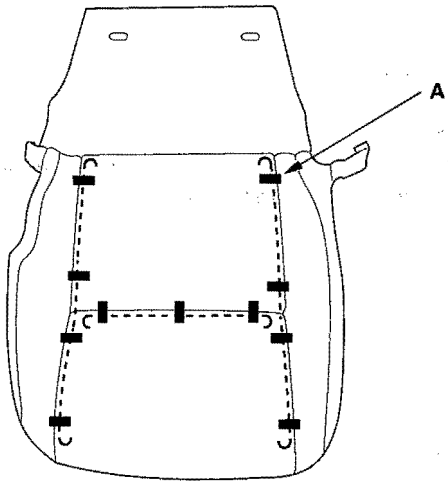

8. Install the cover in the reverse order of removal, and note these items:

   - To prevent wrinkles when installing a seat cushion cover, make sure the material is stretched evenly over the pad before securing the clips and hook strips.
   - Replace any clips you removed with new ones (A). Install them with commercially available upholstery ring pliers (B).

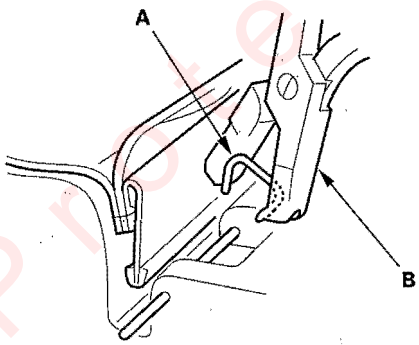

Protected by AR

Rear Seat Removal/Installation

NOTE: Take care not to scratch the body or tear the seat covers.

1. Remove the seat cushion bolt (A), then pull the seat hook knobs (B) to release the seat cushion.
2. Loosen the upper bolts (C), then remove the lower bolts (D).
3. Install the seat in the reverse order of removal, and note these items:
   - Guide the belts over the front of the seat-back as you install it.
   - Before attaching the rear seat-back and cushion, make sure there are no twists or kinks in the seat belts.
   - When installing the seat cushion, slip the seat belt buckles through the slits in the seat cushion.

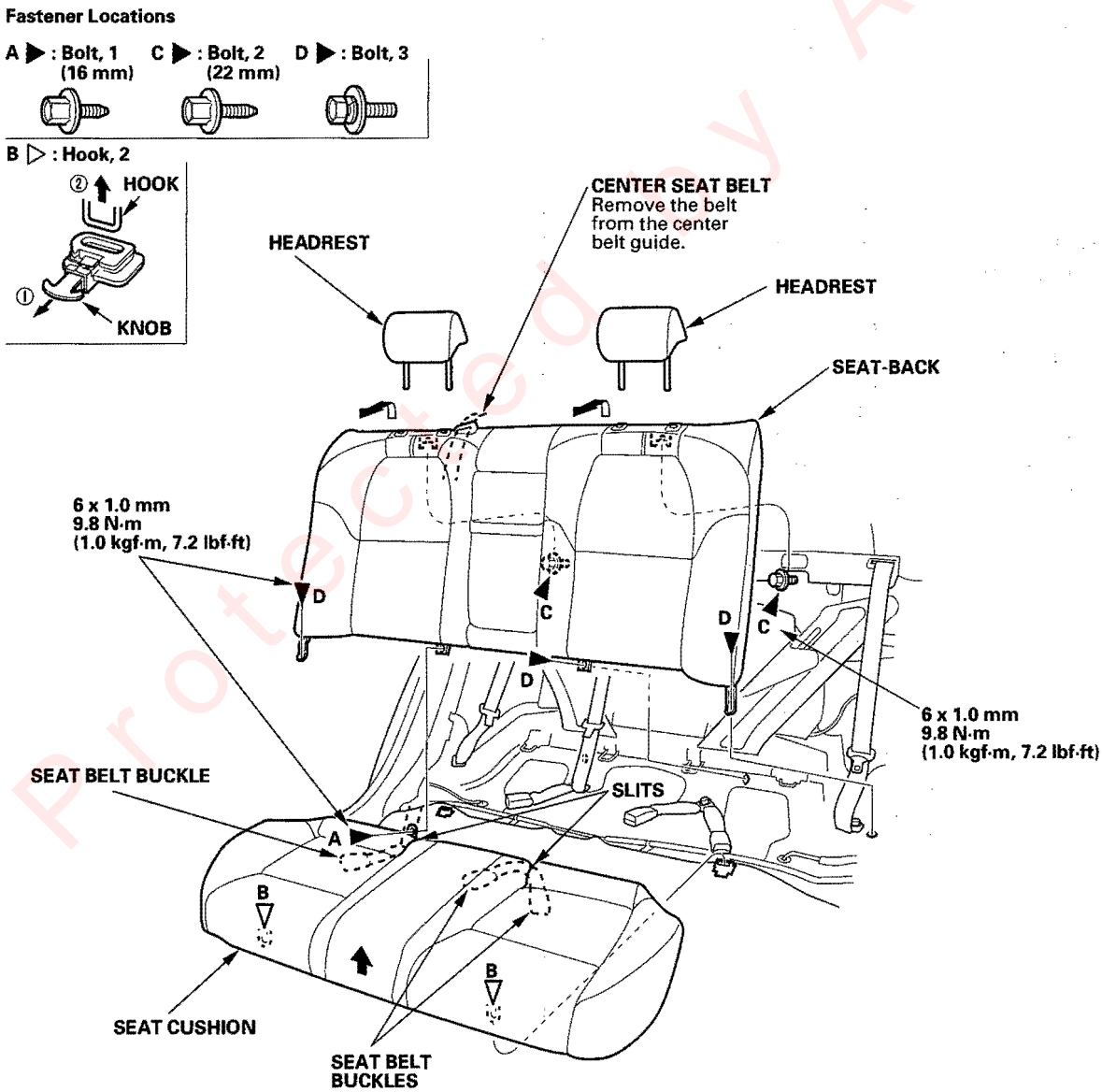

Protected by AR

Rear Seat Armrest Replacement

NOTE: Take care not to tear the seams or damage the seat covers.

1. Remove the clip (A) from the left portion of the armrest pivot.

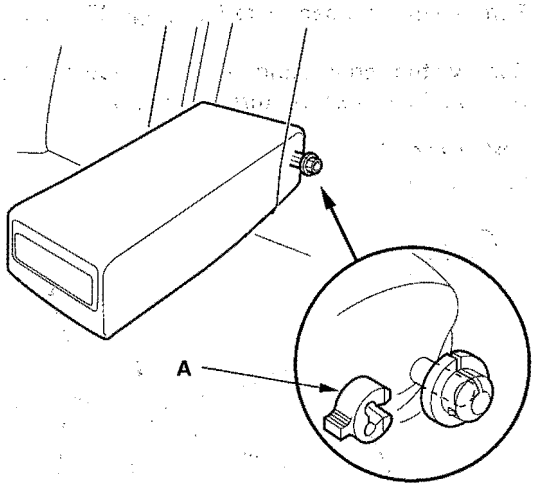

2. Remove the armrest.

   – 1 Slide the armrest (A) toward the driver's side of the vehicle.
   – 2 Remove the pivot shaft (B) from the collar (C) on the passenger's side of the vehicle by pulling forward on the armrest, and remove the pivot shaft from the collar (D) by pulling up on the armrest.

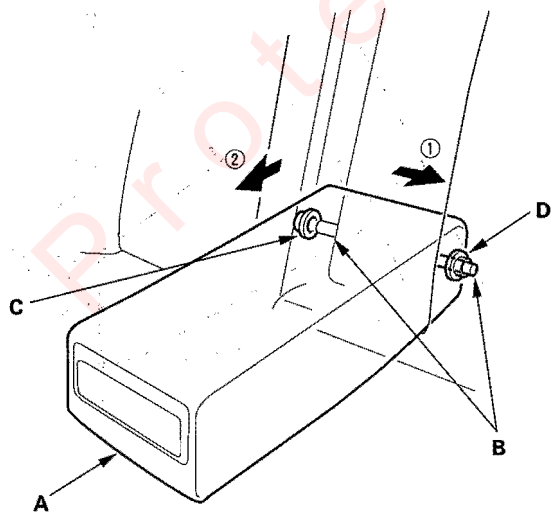

3. Install the armrest in the reverse order of removal.

Trunk Pass-through Cover Key Cylinder Replacement

Special Tools Required
KTC trim tool set SOJATP2014

NOTE:
- Use the appropriate tool from the KTC trim tool set to avoid damage when prying components.
- Take care not to scratch the cover.

1. Using a trim tool, pry the rear seat handle (A) up at both hook portions (B) on the forward side of the trunk pass through cover (C). Then slide the handle half-way up.

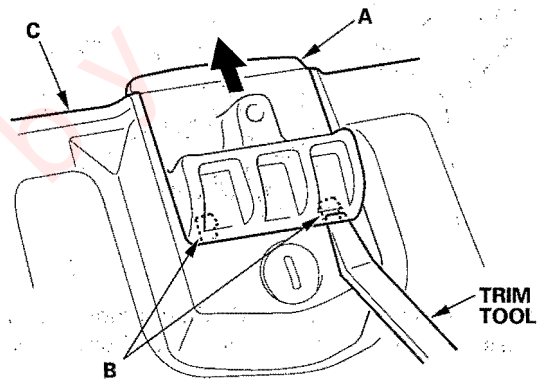

2. From the trunk compartment side of the cover, using a small screwdriver, press the inside hook (A) down through the access hole (B).

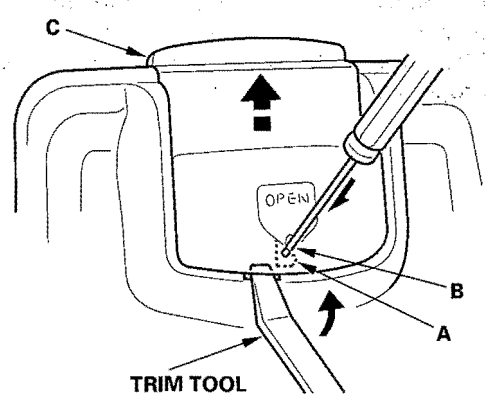

3. While pressing the hook, pry the trunk-side handle (C) up with a trim tool.

(cont'd)

Protected by AR

Trunk Pass-through Cover Key Cylinder Replacement (cont'd)

4. Remove the trunk-side handle (A) and rear seat handle (B) together at the same time.

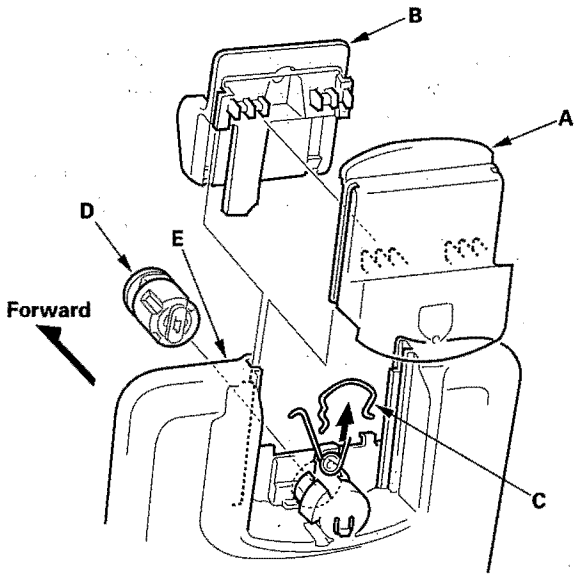

5. Remove the retainer clip (C), then remove the trunk pass-through cover key cylinder (D) from the cover (E).

6. Install the key cylinder in the reverse order of removal, and note these items:

   - Put the two handles together before installing them on the trunk pass-through cover.
   - Make sure the trunk pass-through cover opens properly and locks securely.

Trunk Pass-through Cover Replacement

NOTE: Take care not to tear the seams or damage the seat covers.

1. Remove the rear seat-back (see page 20-112).

2. Remove the screws, and detach the hooks (A), then remove the trunk pass-through lid (B).

Fastener Locations

▶ : Screw, 2

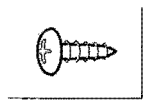

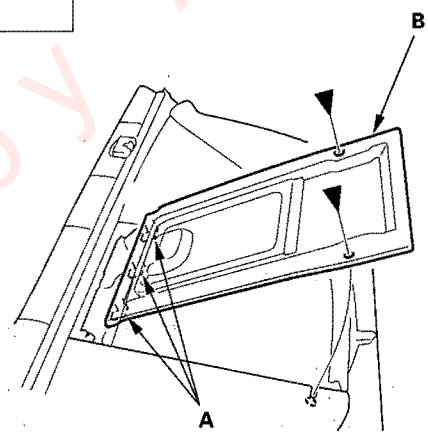

3. Release the clips (A), then remove the trunk pass-through cover (B).

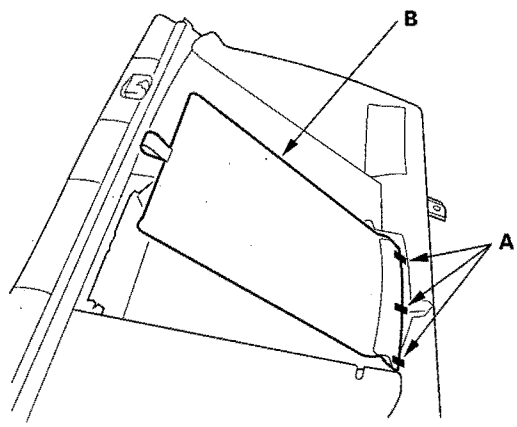

Protected by A P

4. Install the trunk pass-through cover in the reverse order of removal, and note these items:

   - To prevent wrinkles, make sure the material is stretched evenly over the pad before securing the clips.
   - Replace any clips (A) you removed with new ones. Install them with commercially available upholstery ring pilers (B).

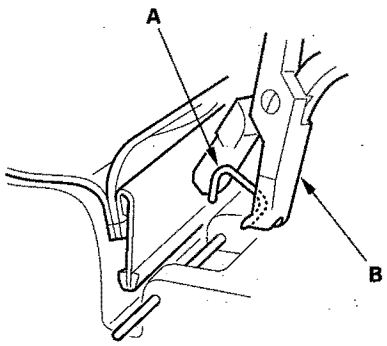

NOTE:
- Take care not to tear the seams or damage the seat covers.
- Put on gloves to protect your hands.

1. Remove the seat-back (see page 20-112).

2. Remove these items:

   - Armrest (see page 20-113)
   - Trunk pass-through cover (see page 20-114)
   - Headrest

3. Remove the screws, then remove the center belt guide (A).

Fastener Locations

▶ : Screw, 2

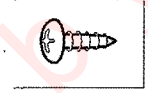

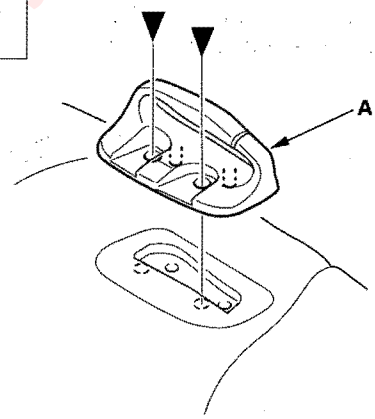

4. Release all the clips (A), then remove the insulator (B).

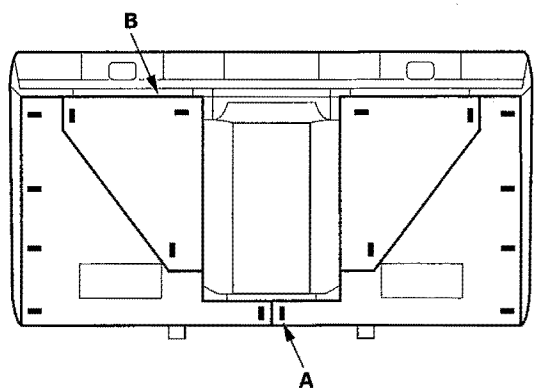

(cont'd)

Protected by AR

Rear Seat-back Cover Replacement (cont'd)

5. Release all the clips (A), and hooks (B), and fold back the seat-back cover (C).

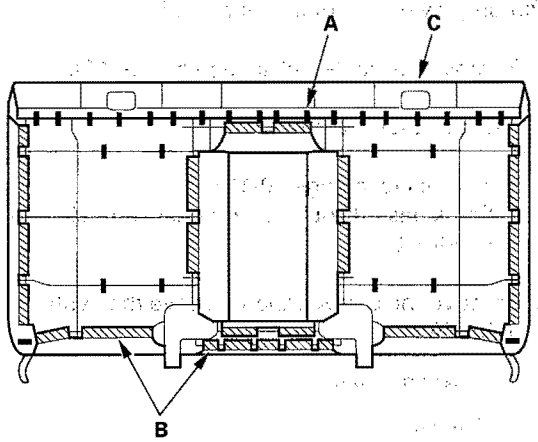

6. Pull out the headrest guides (A) while pinching the ends of the guides, and remove them.

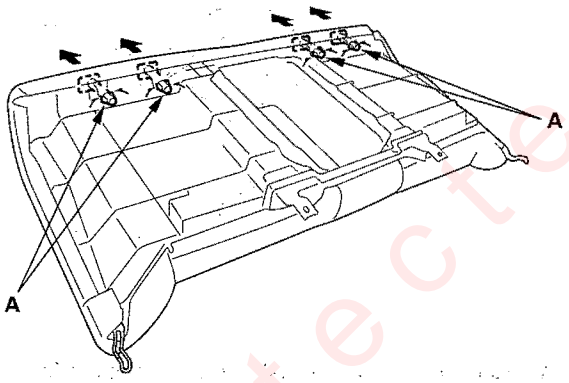

7. Remove the seat-back cover and pad from the seat-back frame.

8. Pull back the edge of the seat-back cover (A) all the way around, and release the clips (B), fasteners (C), then remove the seat-back cover.

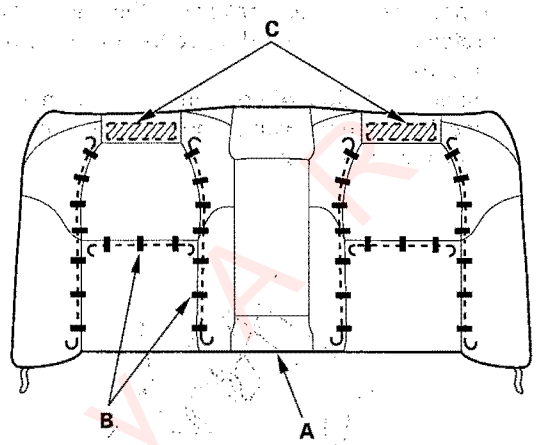

9. Install the cover in the reverse order of removal, and note these items:

- To prevent wrinkles when installing a seat-back cover, make sure the material is stretched evenly over the pad before securing the hook strips, and clips.
- Replace any clips you removed with new ones. Install them with commercially available upholstery ring pliers.

Protected by AR

Rear Seat Cushion Cover Replacement

1. Remove the rear seat cushion (see page 20-112).

2. Release all the clips (A) from under the seat cushion, and fold back the seat cushion cover.

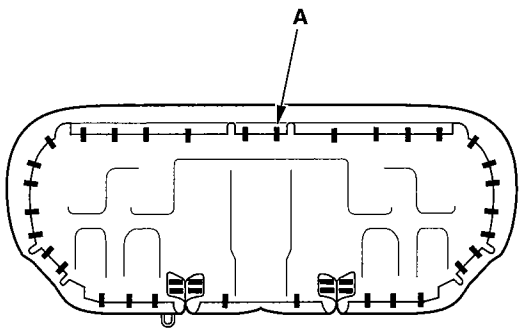

3. Pull back the edge of the seat cushion cover all the way around, and release the clips (A), then remove the seat cushion cover.

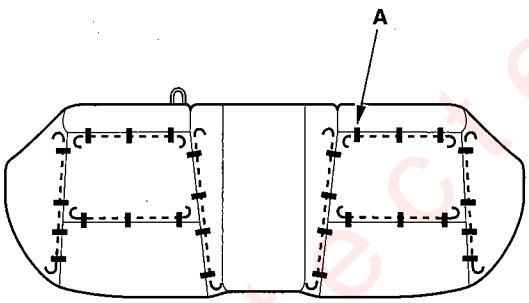

4. Install the cover in the reverse order of removal, and note these items:

   - To prevent wrinkles, make sure the material is stretched evenly over the pad before securing the clips.
   - Replace any clips (A) you removed with new ones. Install them with commercially available upholstery ring pliers (B).

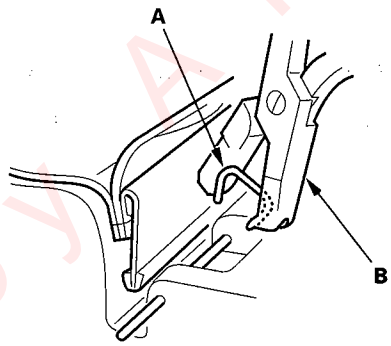

Protected by AR

Front Bumper Removal/Installation

NOTE:
- Have an assistant help you when removing and installing the front bumper.
- Take care not to scratch the front bumper and body.
- Put on gloves to protect your hands.

1. Remove the front bulkhead cover (see page 20-130).
2. Remove the front strakes from under of the front bumper (see page 20-141).
3. Remove the front bumper as shown.

Fastener Locations

A ▶ : Bolt, 2 B ▶ : Screw, 2 C ▷ : Clip, 10

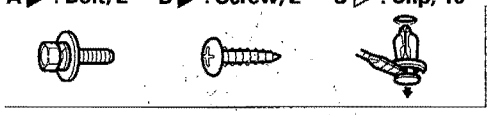

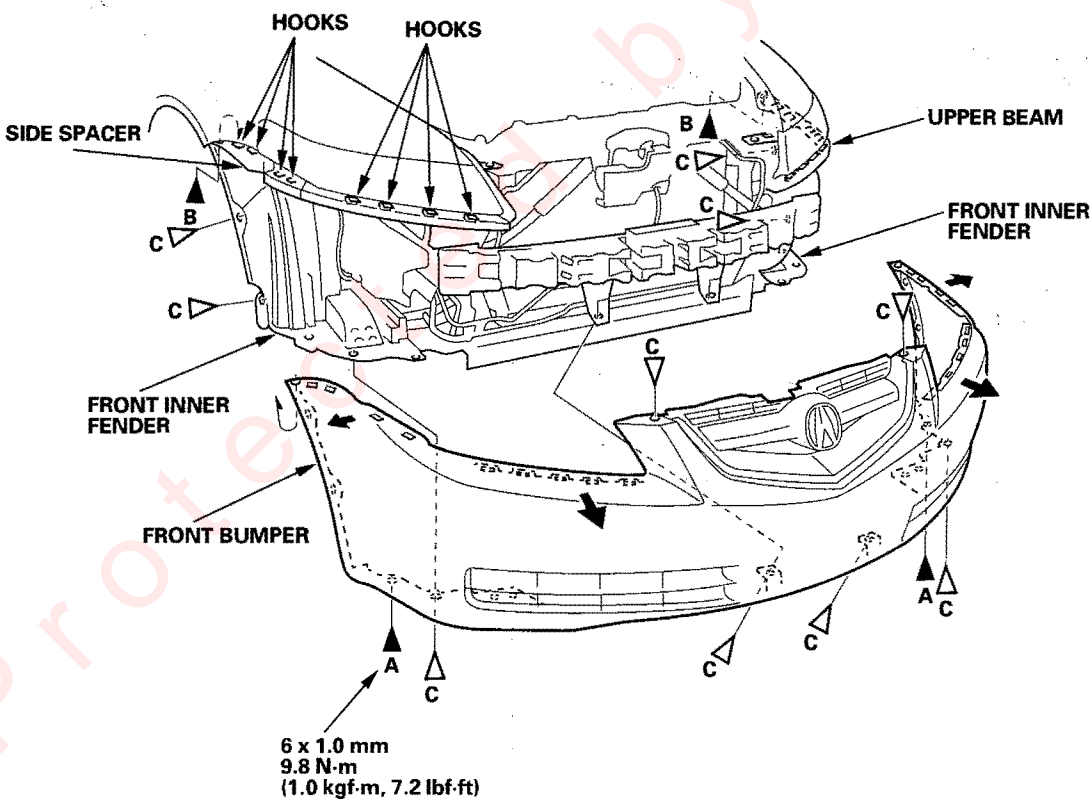

Protected by AR

4. Remove the front bumper absorber as shown.

Fastener Locations

A ▷ : Hook, 8

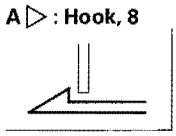

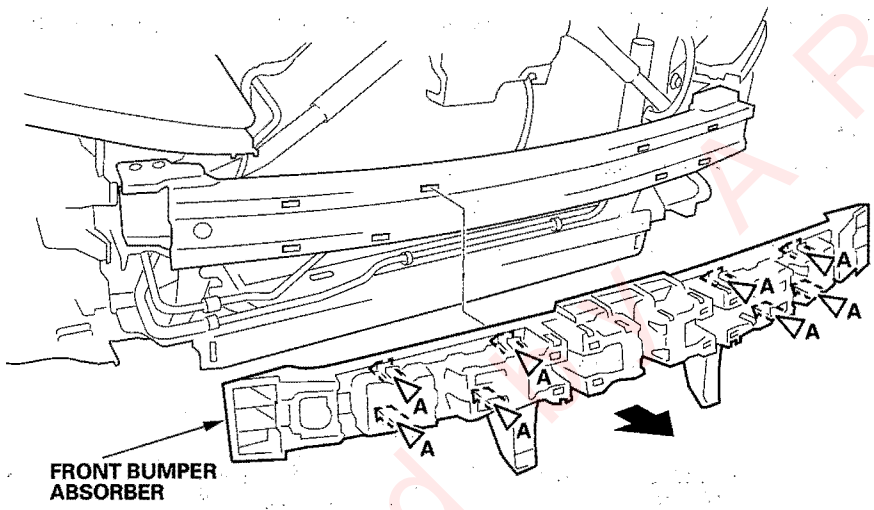

5. Install the bumper in the reverse order of removal, and note these items:

- Make sure the front bumper engages the hooks of the side spacers and upper beams on both sides securely.
- Replace any damaged clips.
- Push the clips and hooks into place securely.

Protected by AR

Rear Bumper Removal/Installation

Special Tools Required
KTC trim tool set SOJATP2014

NOTE:
- Have an assistant help you when removing and installing the rear bumper.
- Take care not to scratch the rear bumper and body.
- Put on gloves to protect your hands.
- Use the appropriate tool from the KTC trim tool set to avoid damage when prying components.

1. Remove the rear bumper as shown.

Fastener Locations

A ▶: Screw, 2 B ▶: Screw, 4 C ▶: Bolt, 2 D ▷: Clip, 6

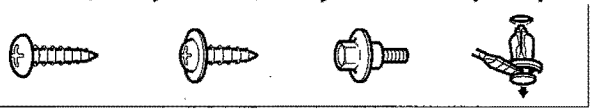

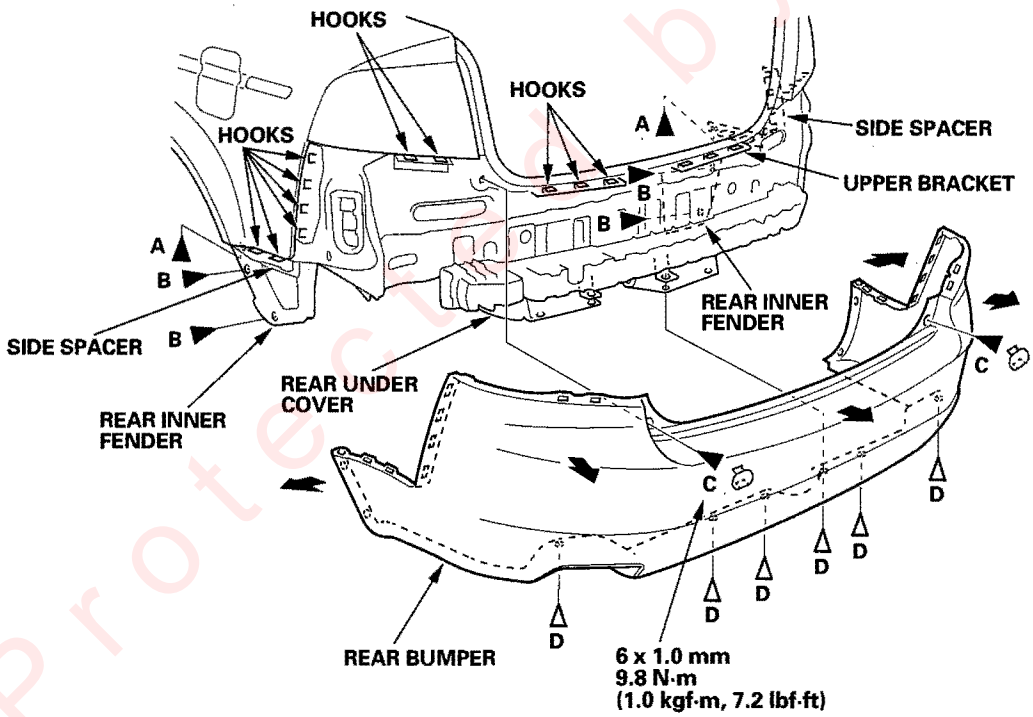

Protected by AR

2. Remove the rear bumper absorber as shown.

Fastener Locations

A ▷ : Hook, 8 B ▷ : Hook, 2

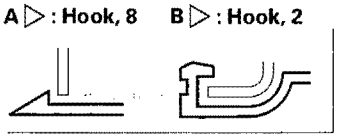

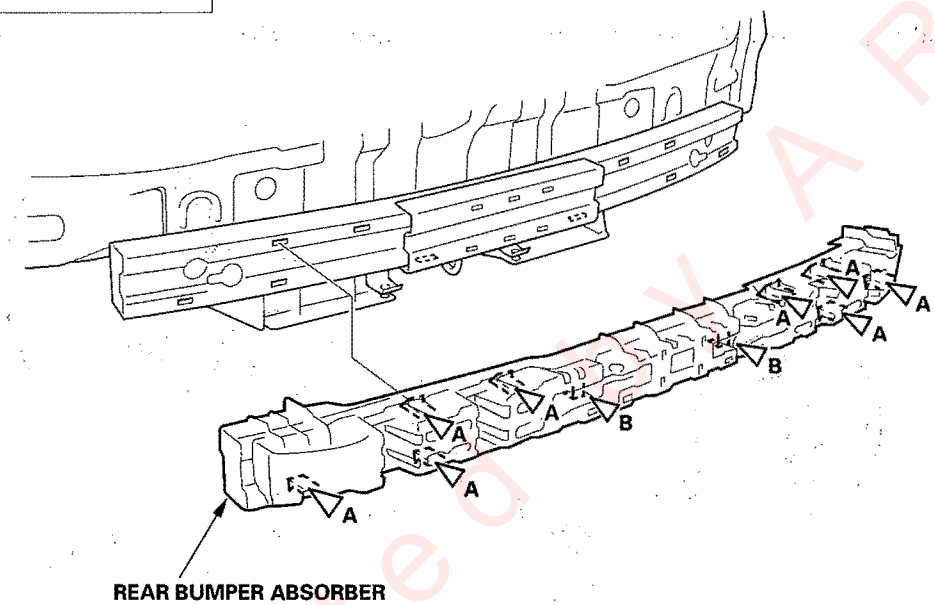

3. Install the bumper in the reverse order of removal, and note these items:

- Make sure the rear bumper engages the hooks of the side spacers, side brackets and upper brackets on both sides securely.
- Replace any damaged clips.
- Push the clips and hooks into place securely.

Protected BY AR

Adjustment

1. Remove the front fender trim and the hood hinge covers (see page 20-131).

2. Slightly loosen each hood hinge bolt.

3. Adjust the hood alignment in this sequence.

   - Adjust the hood right and left, as well as forward and rearward, by using the elongated holes on the hood hinge (A).
   - Turn the hood edge cushions (B), as necessary, to make the hood fit flush with the body at the front and side edges.

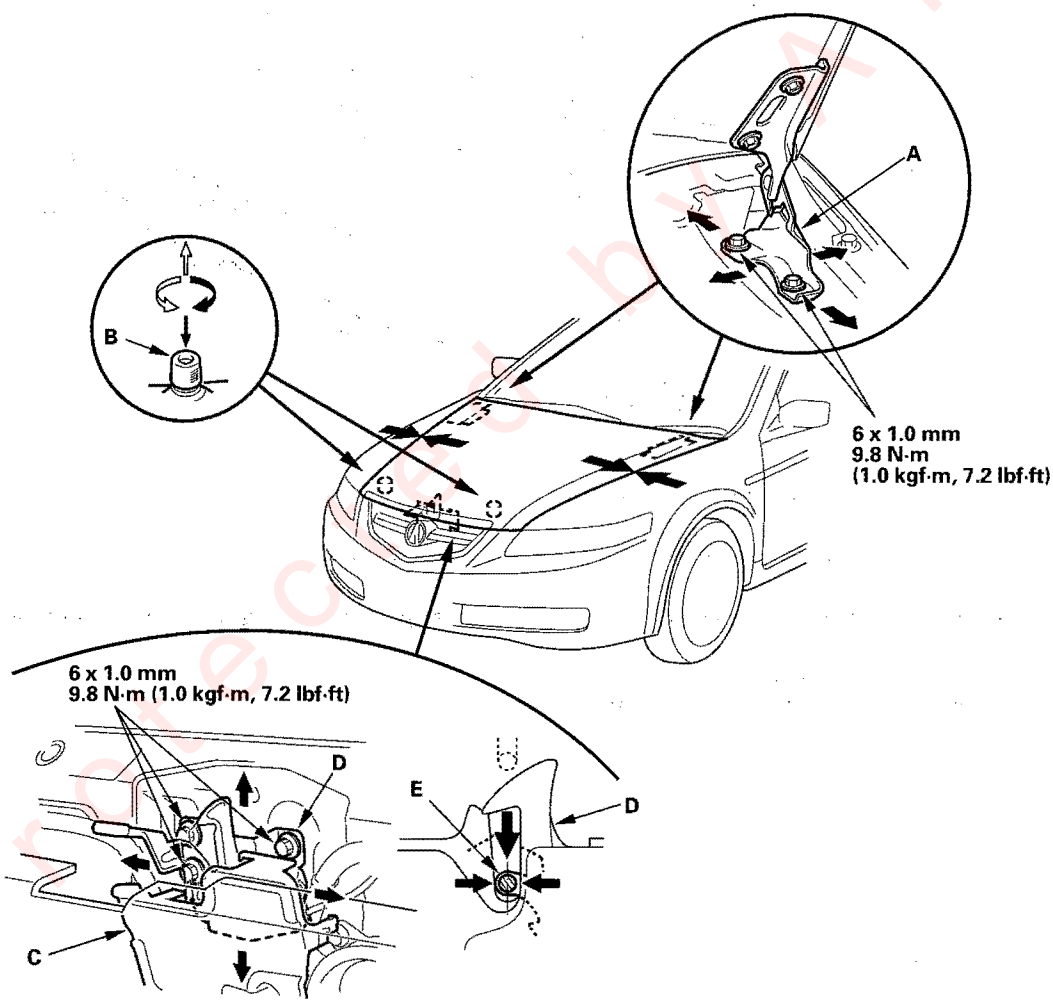

4. Remove the front bulkhead cover (see page 20-130), and release the upper portion of the hood latch cover (C). Adjust the hood latch (D) to obtain the proper height at the forward edge, and move the hood latch right or left until the striker (E) is centered in the hood latch.

5. Tighten the bolts to the specified torque.

Protected by MR

6. Check that the hood opens properly and closes securely.

7. Apply touch-up paint to the hinge mounting bolts and around the hinges, and let the paint dry.

8. Apply multipurpose grease to each location of the hood latch and hood hinge as indicated by the arrows.

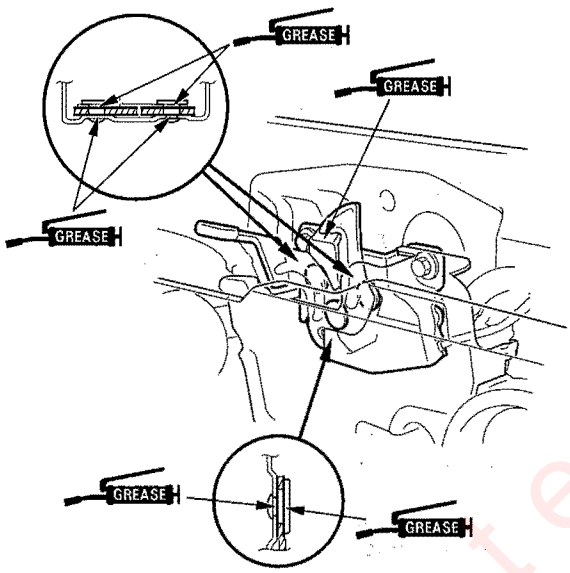

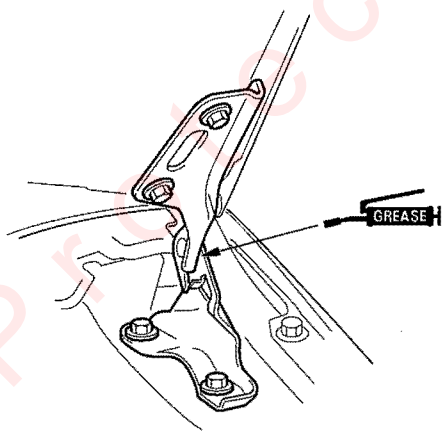

9. Reinstall all of the removed parts.

Hood Support Strut Replacement

1. While an assistant supports the hood, use a flat-tip screwdriver (A) to pry out the clips (B) on both ends of the hood support struts (C), and then remove the support struts from the pivot bolts. Do not remove the clips from the struts.

   NOTE: Use eye protection when doing this procedure.

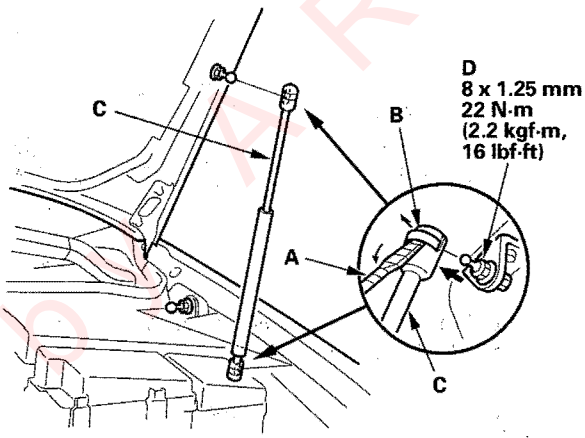

2. Push the clips back into their original position, and then push the ends of the struts onto the pivots bolts.

Protected by AR

Hood Seal Replacement

1. Using a clip remover, detach the clips, then remove the hood seal (A) and hood corner seals (B). Take care not to scratch the hood.

Fastener Locations

▷ : Clip, 15

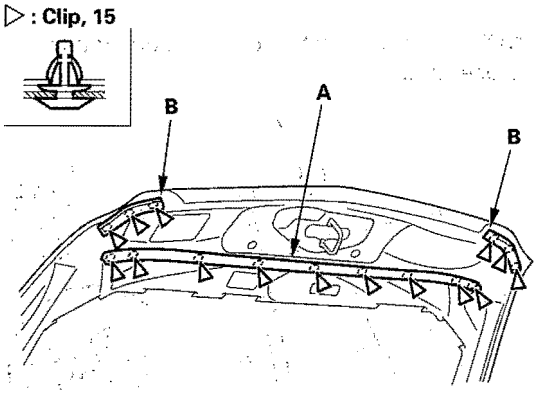

2. Install the seals in the reverse order of removal, and note these items:

- Replace any damaged clips.
- Push the clips into place securely.

Hood Insulator Replacement

1. Using a clip remover, detach the clips. Release the hooks (A, B), then remove the hood insulator (C). Take care not to scratch the hood.

Fastener Locations

▷ : Clip, 5

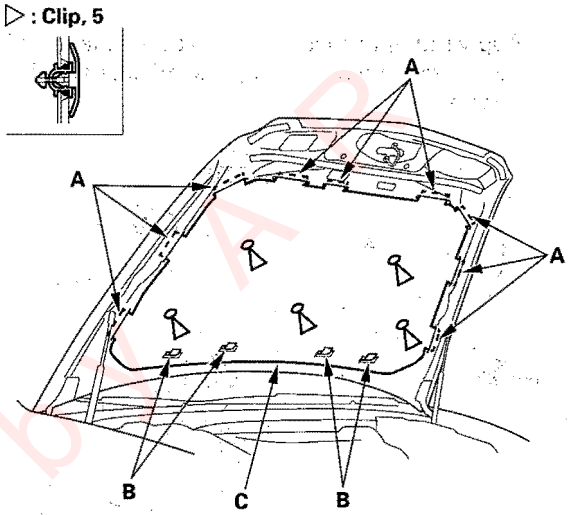

2. Install the insulator in the reverse order of removal, and note these items:

- Replace any damaged clips.
- Push the clips into place securely.

Protected by AP

Adjustment

1. Remove the rear shelf (see page 20-66).

2. Slightly loosen each bolt.

3. Adjust the trunk lid alignment in the following sequence.

   - Adjust the trunk lid hinges (A) right and left, as well as forward and rearward, by using the elongated holes. Take care not to hit the rear window when loosening the bolts (B).
   - Turn the trunk lid edge cushions (C), in or out as necessary, to make the trunk lid fit flush with the body at the rear and side edges.
   - Remove the trunk rear trim panel cap (D).
   - Adjust the fit between the trunk lid and the trunk lid opening by moving the striker (E).

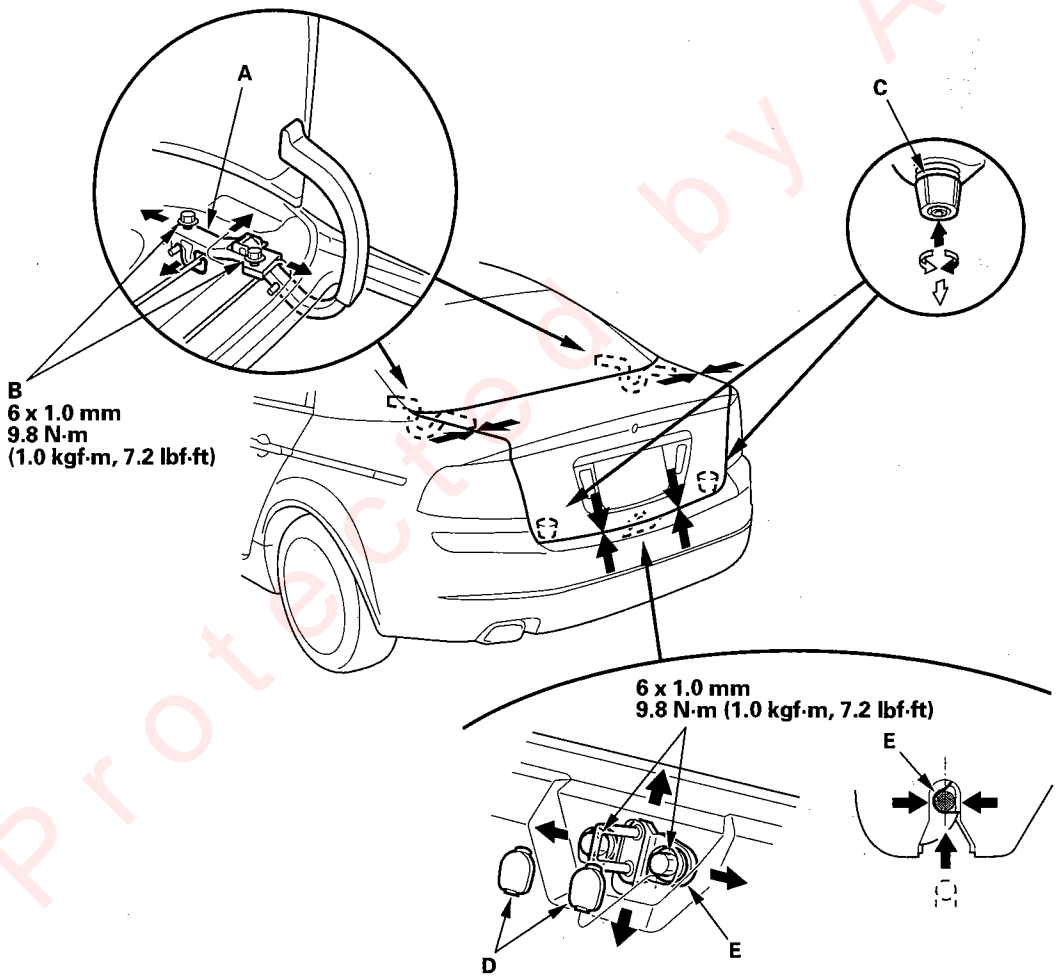

4. Tighten the bolts to the specified torque.

5. Make sure the trunk lid opens properly and locks securely.

6. Reinstall all remaining removed parts.

Protected by AR

Trunk Lid Torsion Bar Replacement

Special Tools Required
Torsion bar assembly tool 08M10-SM4-100
or 07AAE-SDAA100

1. Remove the torsion bars (A) from the torsion bar center clip (B).

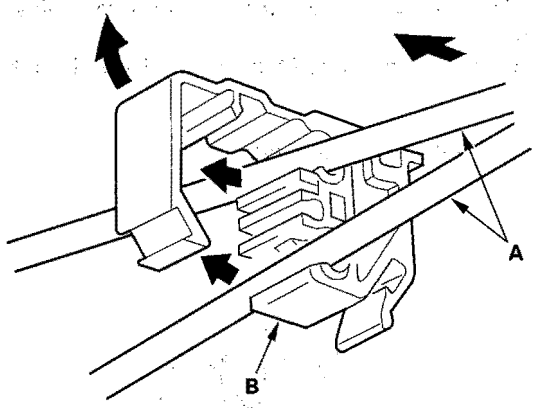

2. Put on gloves to protect your hands. Remove the torsion bars with the torsion bar tool (A) from both trunk lid hinges. First remove the left torsion bar (B), then remove the right torsion bar (C).

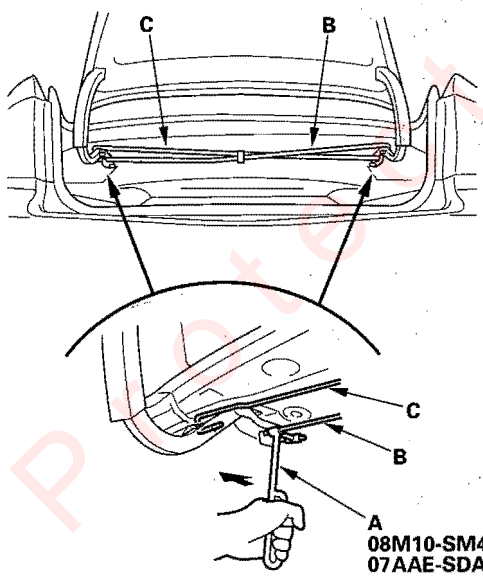

3. Remove the torsion bar center clip from the body.

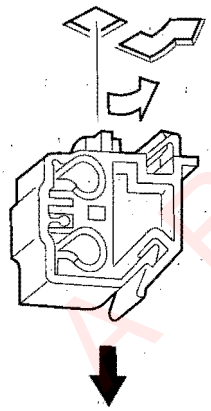

4. Install the torsion bars in the reverse order of removal, and note these items:

- The shapes of the right torsion bar (A) and left torsion bar (B) are shown. Install the torsion bars properly.
- Adjust the torsion bars forward or rearward with the torsion bar assembly tool.
- Positions where each torsion bar was installed in the factory are following:

  Left torsion bar: Normal position
  Right torsion bar: Higher tension

- Make sure the trunk lid opens properly and locks securely.

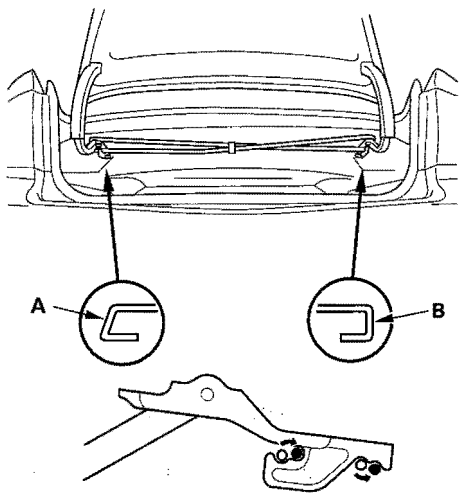

Protected by AR

Trunk Lid Weatherstrip Replacement

1. Remove the trunk lid weatherstrip (A) by pulling it off.

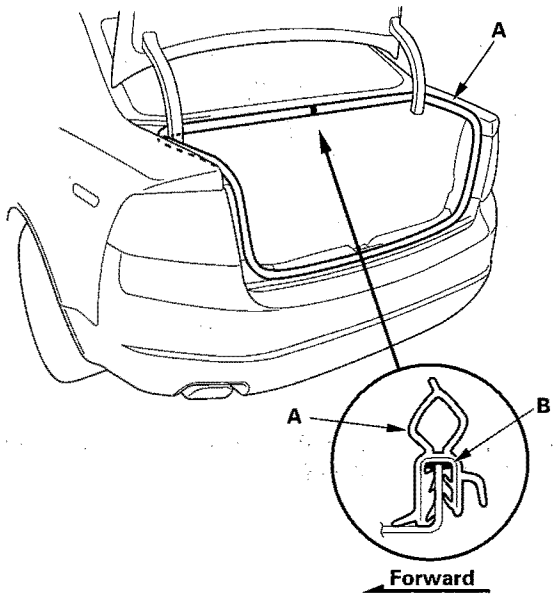

2. Apply clear sealant (B) into the channel of the trunk lid weatherstrip all the way around.

   Sealant: Cemedine P/N 08712-0004, or equivalent

3. Locate the seam on the trunk lid weatherstrip. Align the center of the trunk lid striker, and install the trunk lid weatherstrip all the way around in the direction shown. Make sure there are no wrinkles in the weatherstrip.

4. Check for water leaks.

Protected by AR

Adjustment

1. Slightly loosen the hinge mounting bolts (A).

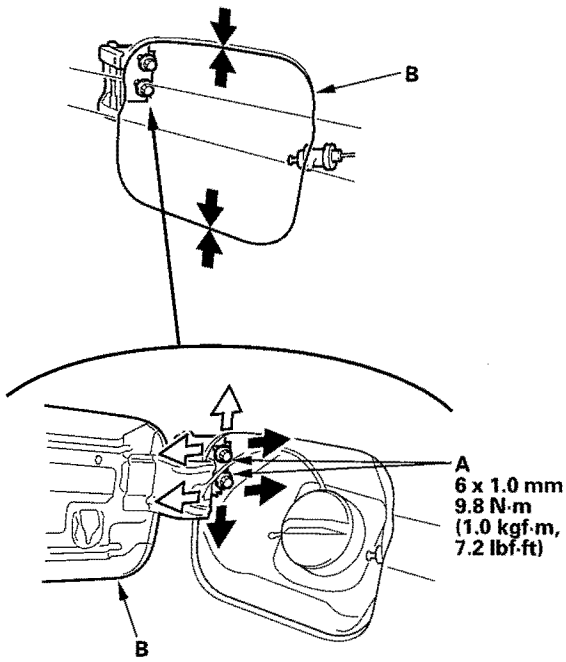

2. Adjust the fuel fill door (B) in or out until it's flush with the body, and up or down as necessary to equalize the gaps.
3. Tighten the hinge mounting bolts.
4. Check that the fuel fill door opens properly and locks securely, and check that the rear of the door is flush with the body.
5. Apply mutipurpose grease to each location indicated by the arrows.

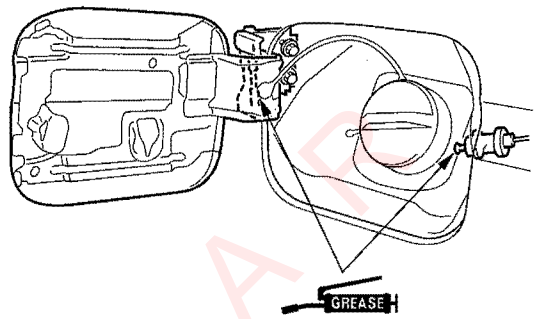

6. Apply touch-up paint to the hinge mounting bolts and around the hinges.

Protected by AP

Hood Molding Replacement

1. Remove caps and the nuts (A), and detach the clip (B) by pushing it from the drain hole (C) in the hood, then remove the hood molding (D). Take care not to scratch the hood.

Fastener Locations

A ● : Nut, 4 B ▷ : Clip, 1

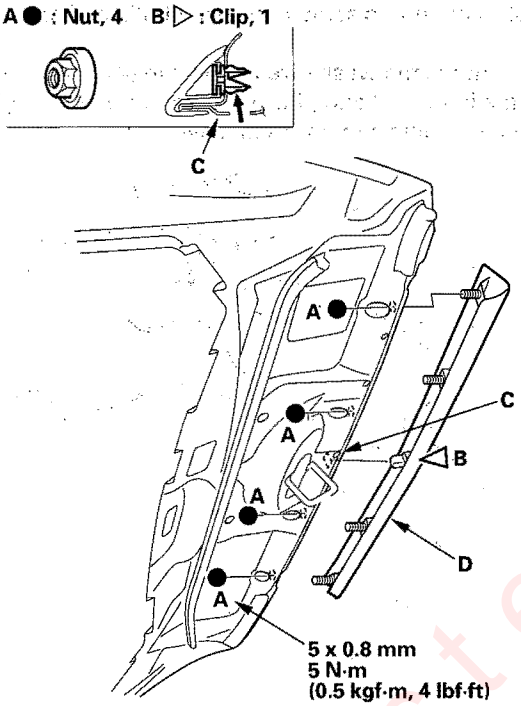

2. Install the molding in the reverse order of removal, and replace the clip if it's damaged.

Front Grille Replacement

1. Remove the front bumper (see page 20-118).

2. Remove the screws, and remove the front grille cover (A) and center molding (B) from the front bumper (C). Take care not to scratch the front bumper.

Fastener Locations

▶ : Screw, 7

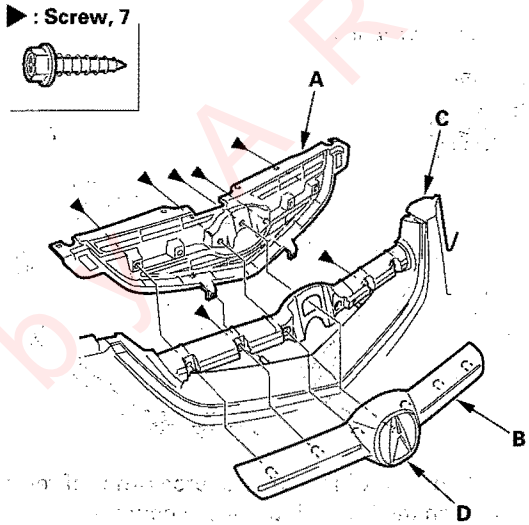

3. If emblem (D) replacement is necessary, refer to emblem/sticker replacement (see page 20-140).

4. Install the grille in the reverse order of removal.

Protected by AR

Front Grille Lower Molding Replacement

1. Remove the front bumper (see page 20-118).
2. With screwdriver gently push out the hooks from inside, then remove the front grille lower molding (A) from the front bumper (B) by pulling it out. Take care not to scratch the front bumper.

Fastener Locations

▷ : Hook, 8

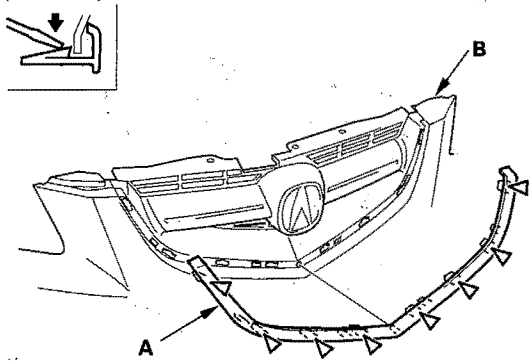

3. Install the molding in the reverse order of removal, and push the hooks into place securely.

Front Bulkhead Cover Replacement

Special Tools Required
KTC trim tool set SOJATP2014

NOTE:
- Use the appropriate tool from the KTC trim tool set to avoid damage when prying components.
- Take care not to scratch the front bulkhead and body.

1. Remove the washer reservoir cap (A), and release the hooks (B) and pins (C), then remove the right side engine compartment cover (D).

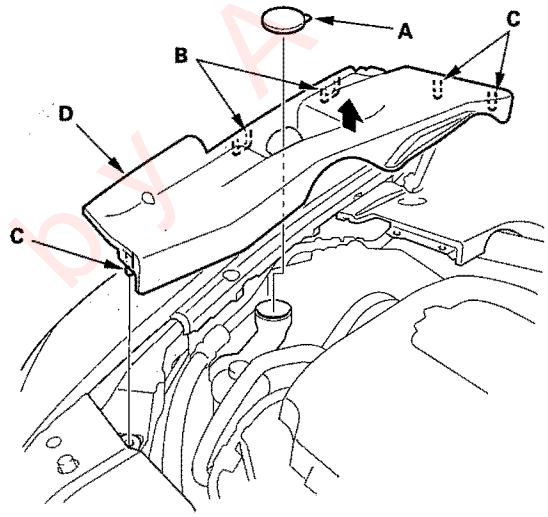

2. Release the hooks (A) and pins (B), then remove the left side engine compartment cover (C).

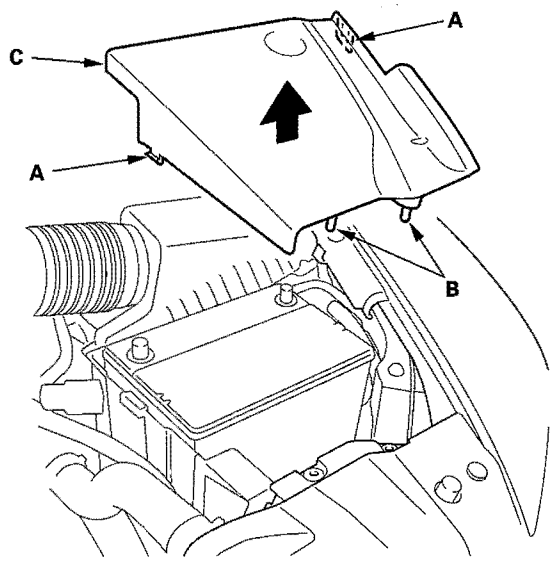

Protected by A

3. Detach the clips (A, B), then remove the front bulkhead cover (C).

Fastener Locations

A ▷ : Clip, 3 B ▷ : Clip, 2

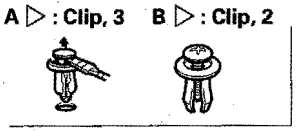

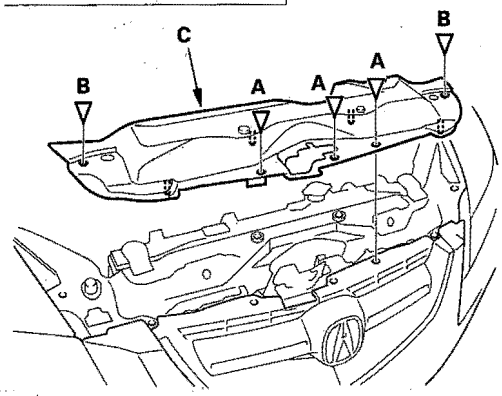

4. Install the front bulkhead cover in the reverse order of removal, and note these items:

- Replace any damaged clips.
- Push the clips into place securely.

Front Fender Trim Replacement

NOTE: Take care not to scratch the body.

1. Remove these items:

- Left front fender trim
  - Right rear engine compartment cover (see step 4 on page 20-132)
  - Left side engine compartment cover (see step 2 on page 20-130)
- Right front fender trim
  - Right side engine compartment cover (see step 1 on page 20-130)
  - Left rear engine compartment cover (see step 2 on page 20-132)
  - Right rear engine compartment cover (see step 4 on page 20-132)

2. Remove the clips, then remove the front fender trim (A) by releasing the hooks (B) from the body.

Fastener Locations

▷ : Clip, 2

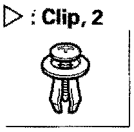

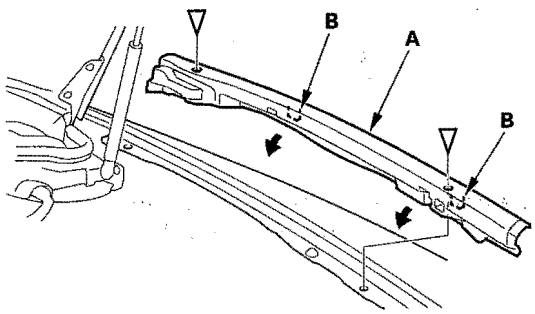

3. Install the trim in the reverse order of removal, and note these items:

- Replace any damaged clips.
- Push the clips into place securely.

Protected by

Cowl Cover Replacement

NOTE:
- Take care not to scratch the cowl cover and body.
- Use a clip remover to remove the hood rear seal clips.

1. Remove the windshield wiper arms (see page 22-251).

2. Release the hooks (A, B, C), then remove the left rear engine compartment cover (D) from the clip (E).

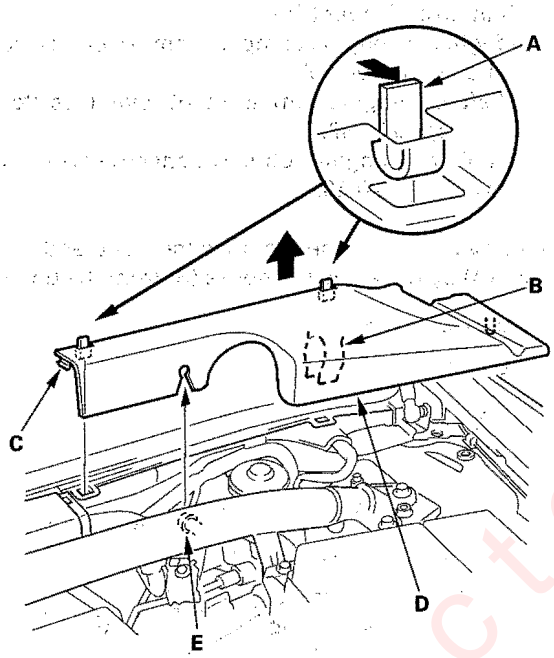

3. Remove the right side engine compartment cover (see step 1 onpage 20-130).

4. Release the hooks (A), then remove the right rear engine compartment cover (B) from the clips (C).

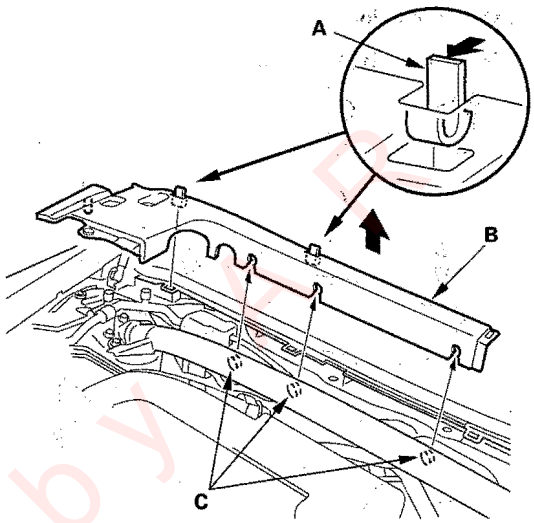

5. Pull out the hood rear seal (A). Using a clip remover, detach the clips from the cowl covers.

Fastener Locations

▷ : **Clip, 4**

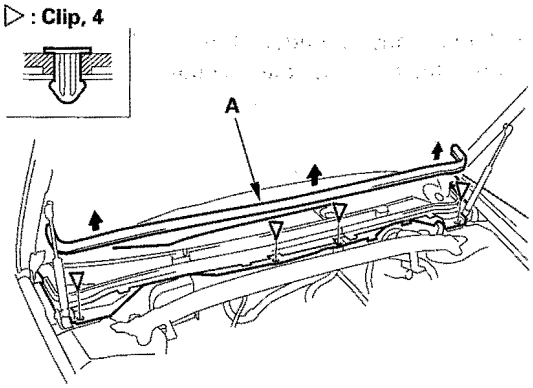

Protected by

6. Detach the clips (A, B) by carefully pulling the passenger's cowl cover (C) upward, and release the hook (D) on the passenger's cowl cover from the driver's cowl cover (E), then remove the cover by releasing the hook (F).

Fastener Locations

A ▷: Clip, 5 B ▷: Clip, 1

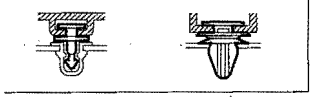

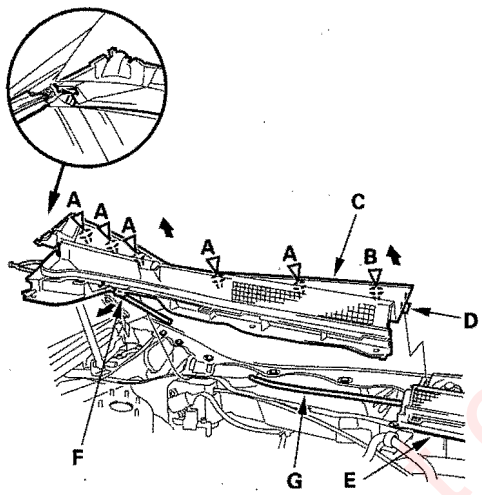

7. Disconnect the windshield washer tubes (G).

8. Detach the clips (A, B, C) by carefully pulling the driver's cowl cover (D) upward, then remove the cover by releasing the hooks (E).

Fastener Locations

A ▷: Clip, 1 B ▷: Clip, 2 C ▷: Clip, 1

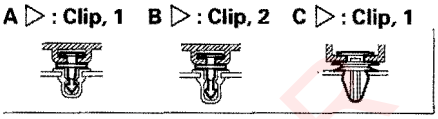

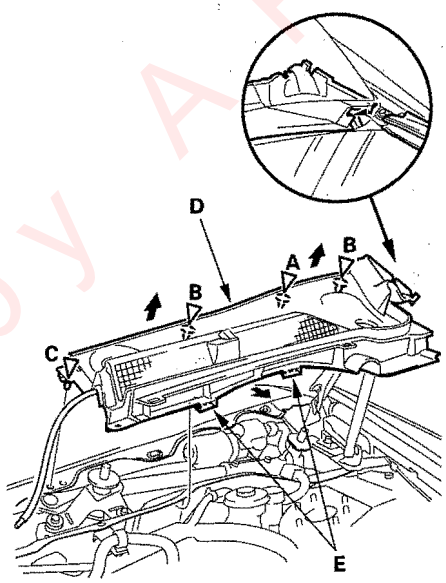

9. Install the covers in the reverse order of removal, and note these items:

- Replace any damaged clips.
- Make sure the washer tubes are connected securely.
- Push the clips into place securely.

Protected by A.R.

Roof Molding Replacement

Special Tools Required
KTC trim tool set SOJATP2014

NOTE:
- Put on gloves to protect your hands.
- Take care not to damage the windshield.
- Do not use any metalic tools to remove the roof molding, or you may chip the edge of the windshield and some cracks in the windshield will occur.
- Use the appropriate tool from the KTC trim tool set to avoid damage when prying components.
- Take care not to bend the roof molding.

Molding Replacement

1. Remove the cowl cover (see page 20-132).

2. Detach the bottom clip (A) at the lower corner of the windshield.

Fastener Location

A ▷: Clip (Left: Dark Blue, Right: White)

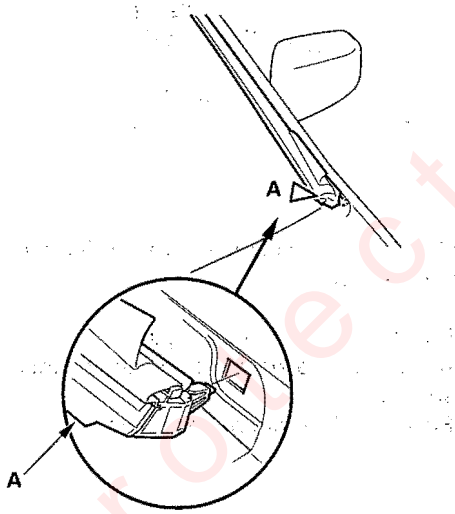

3. Remove the windshield portion of the roof molding (A).

-1 Carefully insert a trim tool (B) under the molding next to the lower clip (C).
-2 While pulling the clip portion of the molding up by hand, push each of the eight small hooks (D) in numbered seqence shown to release the clip from the retainer (E). Do not try to pry up the clip if it is hard to release from the retainer.
-3 Gradually work your way up to release each of the upper clips (F, G, H).

Fastener Locations

C ▷: Green
F ▷: Yellow
G ▷: Red
H ▷: Blue

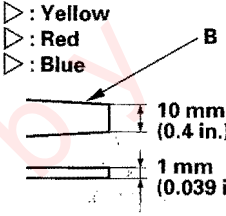

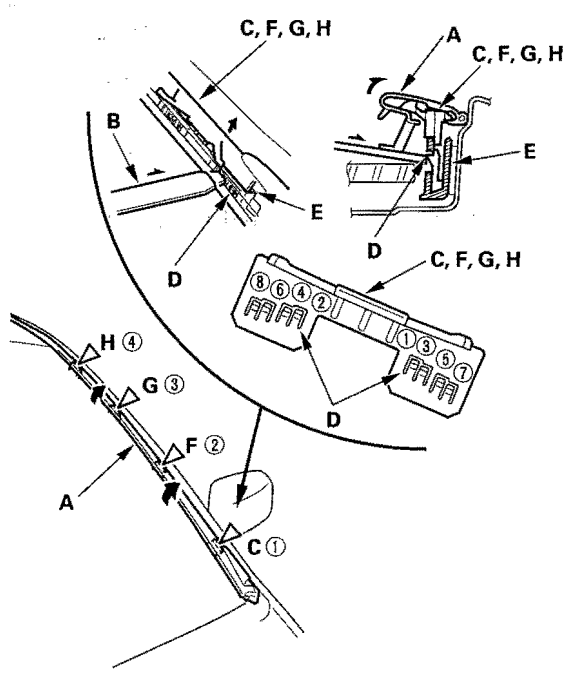

Projected by AR

4. Pull up the middle portion of the roof molding (A) to release it from the retainers (B).

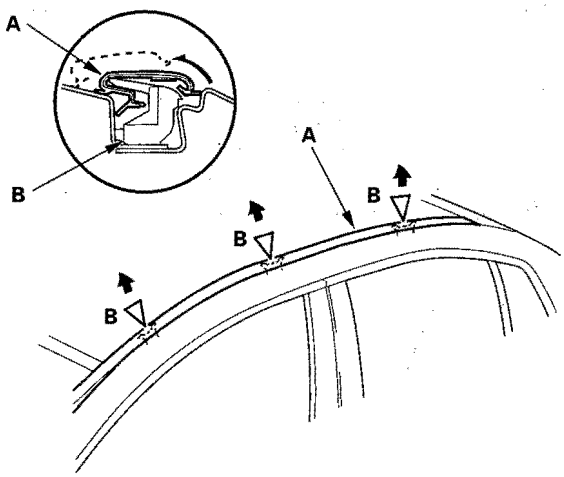

5. Pull the roof molding (A) forward, lift the end of the molding off the pin (B), and remove the roof molding.

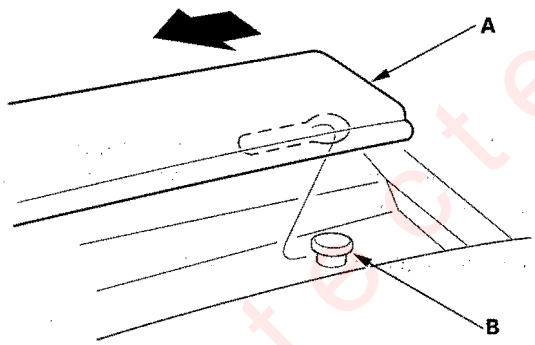

6. Install the molding in the reverse order of removal, and note these items:

   - Make sure the roof molding is installed securely.
   - Replace any damaged clips.

Retainer Replacement

1. While prying the middle hook (A) with a trim tool, slide the upper retainer (B) and lower retainers (C) upward to release them from the T-studs (D) on the A-pillar. Take care not to scratch the body.

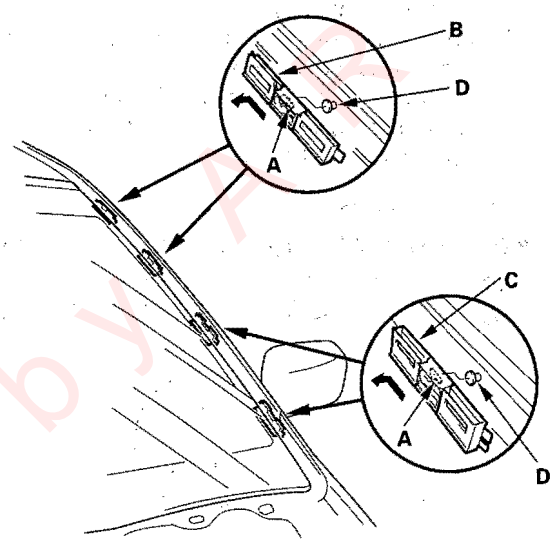

2. Install the retainers in the reverse order of removal.

Protected by AIM

Front Side Sill Panel Replacement

NOTE: Put on gloves to protect your hands.

1. Remove the front side sill panel (A).
   1. On the back of the front fenderwell, remove the screws (B) securing the front side sill panel.
   2. Remove the clip (C).
   3. Carefully remove the clip (D) by pushing it out from inside the fenderwell.
   4. Slide the front side sill panel forward to release it from the clips (E), then remove the panel. The clips stay in the body.

Fastener Locations

B ▶ : Screw, 4 C ▷ : Clip, 1 D ▷ : Clip, 1 E ▷ : Clip, 6

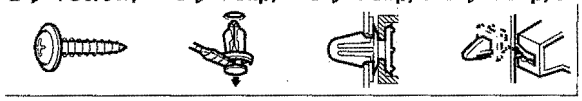

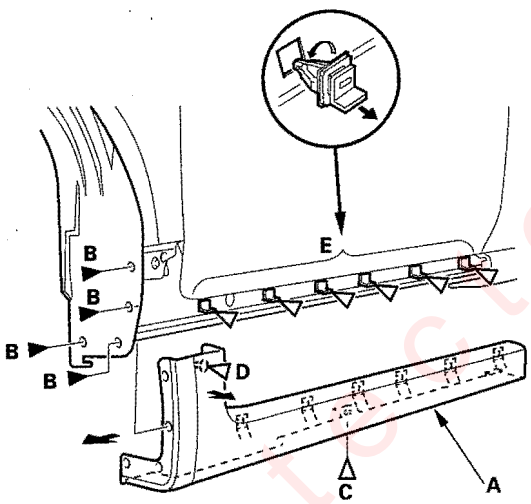

2. Remove the clips from the body by turning them 45°.
3. Replace any damaged clips.
4. Install the clips (A, B) on the front side sill panel (C).

Fastener Locations

A ▷ : Clip, 6 B ▷ : Clip, 1 D ▷ : Clip, 1 E ▶ : Screw, 4

(With EPT foam backing)

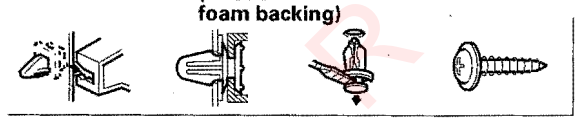

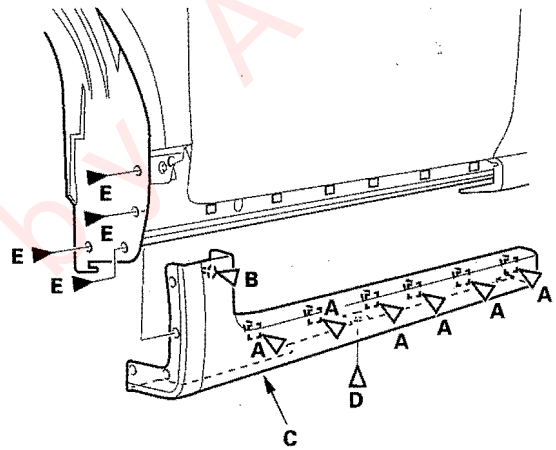

5. Hold the panel up, and fit all the clips into the holes in the body, then push on the panel until the clips snap into place.
6. Install the clip (D) and screws (E).

Protected by AR

Rear Side Sill Panel Replacement

NOTE: Put on gloves to protect your hands.

1. Remove the rear side sill panel (A).
   1 On the front of the rear fenderwell, remove the screws (B) securing the rear side sill panel.
   2 Remove the clips (C, D).
   3 Pull up on the rear of the rear side sill panel while sliding it back to free it from the clips (E, F) which stay in the body.

Fastener Locations

B ▶ : Screw, 4 C ▷ : Clip, 1 D ▷ : Clip, 1 E ▷ : Clip, 2

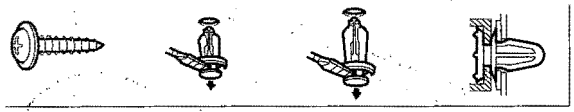

F ▷ : Clip, 3

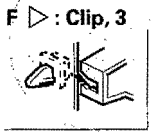

2. Remove the clips from the body by turning them 45°.

3. Replace any damaged clips.

4. Install the clips (A, B) on the rear side sill panel (C).

Fastener Locations

A ▷ : Clip, 3 B ▷ : Clip, 2 D ▷ : Clip, 1 E ▷ : Clip, 1

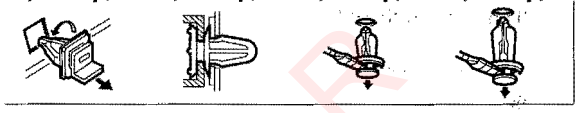

F ▶ : Screw, 4

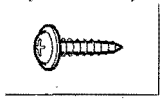

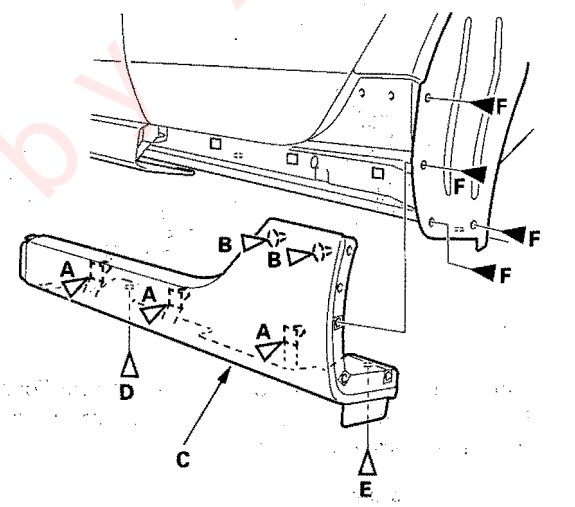

5. Hold the panel up, and fit all the clips into the holes in the body, then push on the panel until the clips snap into place.

6. Install the clips (D, E) and screws (F).

Protected by A R

Rear License Trim Replacement

NOTE: Put on gloves to protect your hands.

1. Remove the trunk lid trim (see page 20-69).
2. From inside the trunk lid, remove the nuts securing the rear license trim (A), disconnect the back-up light connectors (B).

Fastener Locations

● : Nut, 4

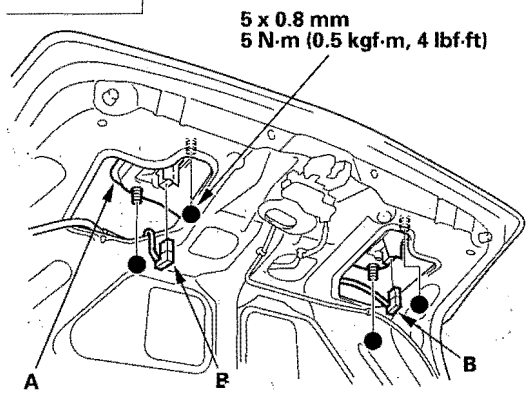

3. Gently close the trunk lid, and pull the rear license trim (A) out to detach the clips, then remove the trim. Take care not to scratch the trunk lid.

Fastener Locations

▷ : Clip, 7

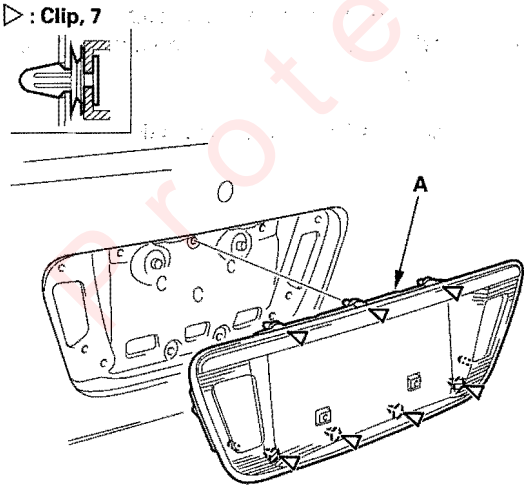

4. If necessary, remove the screws and hooks (A) from the rear license trim (B), then remove the rear license trim molding (C).

Fastener Locations

▶ : Screw, 3

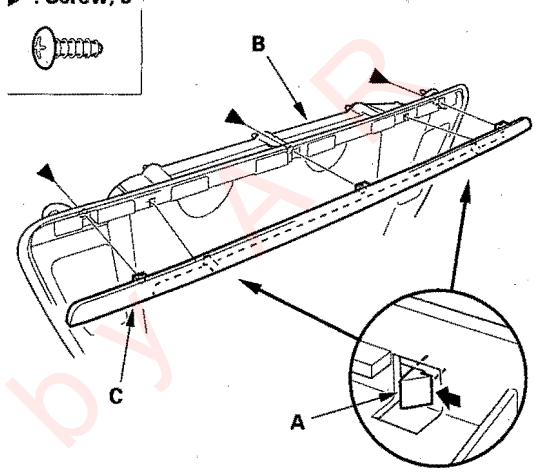

5. Install the trim in the reverse order of removal, and note these items:

- Replace any damaged clips.
- Make sure the back-up light connectors are plugged in properly.
- Push the clips into place securely.

Protected by AR

Rear Under Cover Replacement

1. Remove the clips (A) and bolts (B), then remove the rear under cover (C). Take care not to scratch the rear bumper (D).

Fastener Locations

A ▷ : Clip, 4 B ▶ : Bolt, 2

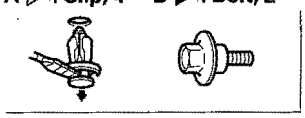

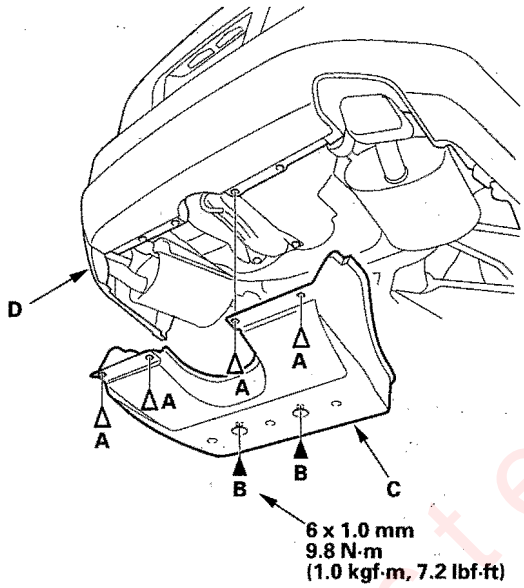

2. Install the cover in the reverse order of removal, and note these items:

- Replace any damaged clips.
- Push the clips into place securely.

Protected by AR

Emblem/Sticker Replacement

NOTE: When removing the emblems/stickers, take care not to scratch the body.

1. Clean the body surface with a sponge dampened in alcohol. After cleaning, keep oil, grease, and water from getting on the surface.
2. Apply the emblem/sticker where shown. When installing the ULEV sticker on the inside surface of the rear door quarter glass, align the sticker application tape with the edge of the glass mark as shown, then press the sticker into place, and remove the application tape.

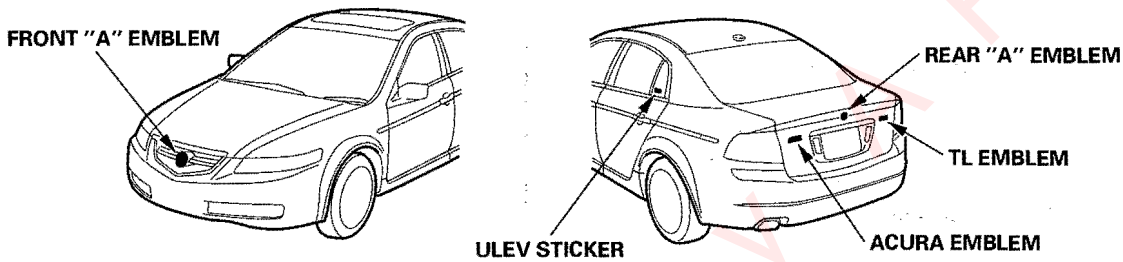

Unit: mm (in.)
Adhesive tape: Thickness 0.8 mm (0.03 in.)

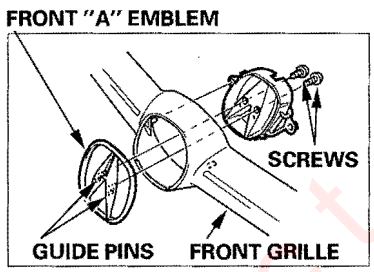

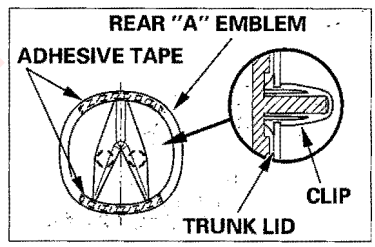

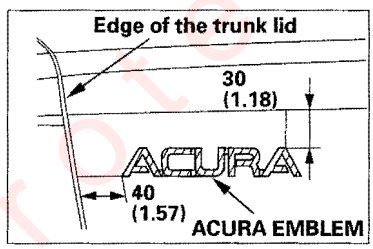

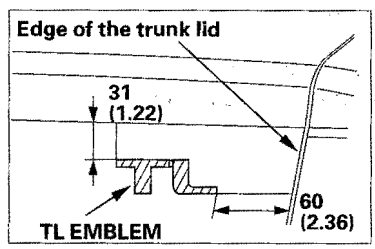

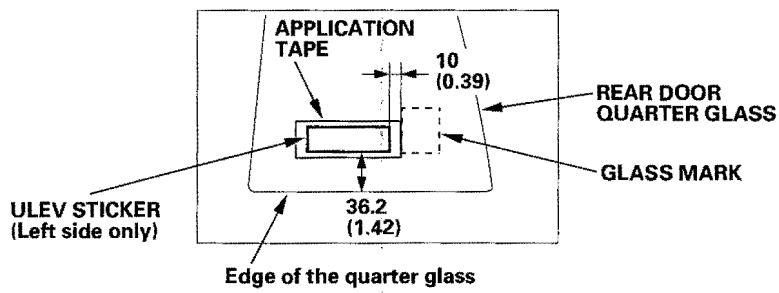

Protected by KAR

Front Strake Replacement

NOTE: Take care not to scratch the body.

1. Remove the bolts (A) and release the hooks (B), then remove the front strake (C).

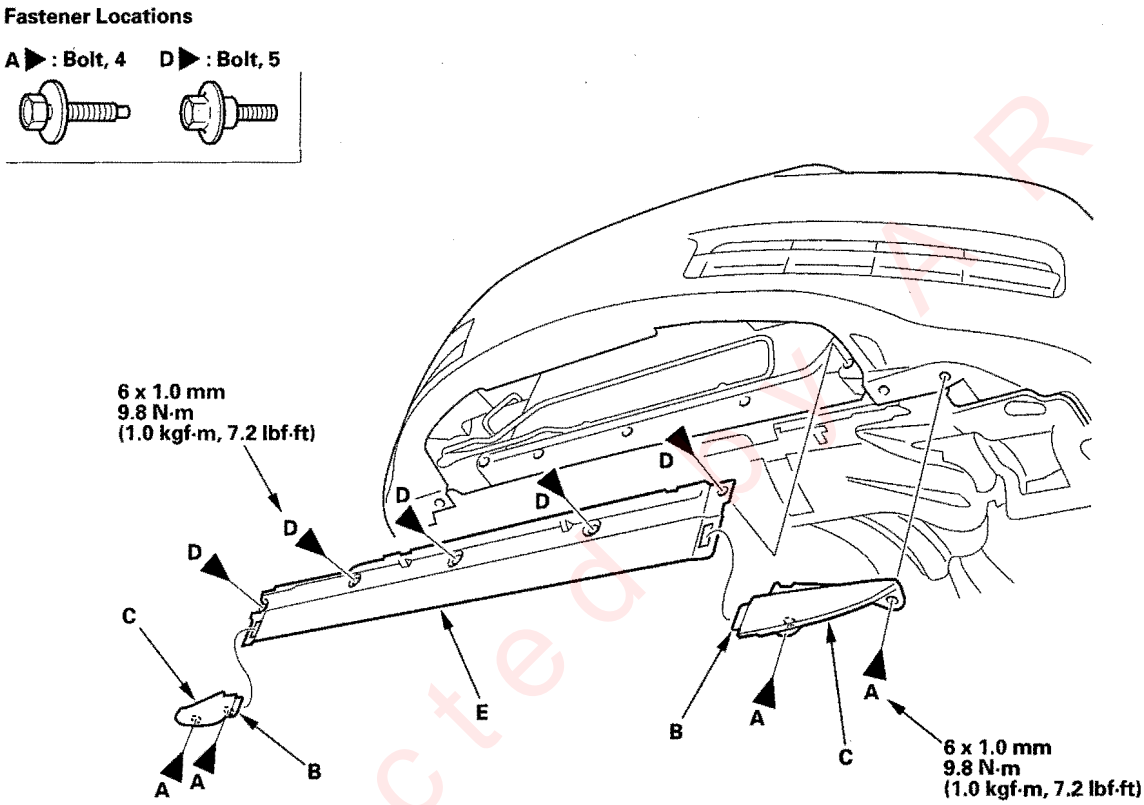

2. Remove the bolts (D), then remove the front air guide plate (E).

3. Install the strakes and plate in the reverse order of removal.

Protected by AR

Front Inner Fender Replacement

NOTE: Take care not to scratch the body.

1. Remove the front inner fender (A).

   -1 On the back of the wheel arch, remove the screws (B).
   -2 From under the front bumper (C), remove the bolts (D, E) securing the front bumper, front strake (F), and front inner fender, and remove the clip (G) securing the front bumper and front inner fender.
   -3 From the wheel arch, remove the clips (H, I) securing the front inner fender (and splash shield) to the body.
   -4 Release the hook (J) of the splash shield, then remove the front inner fender.

Fastener Locations

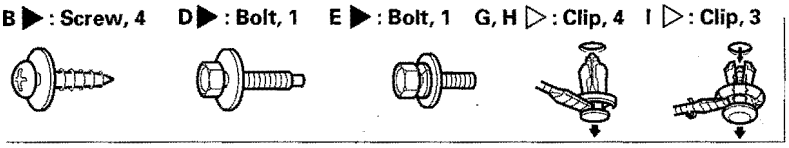

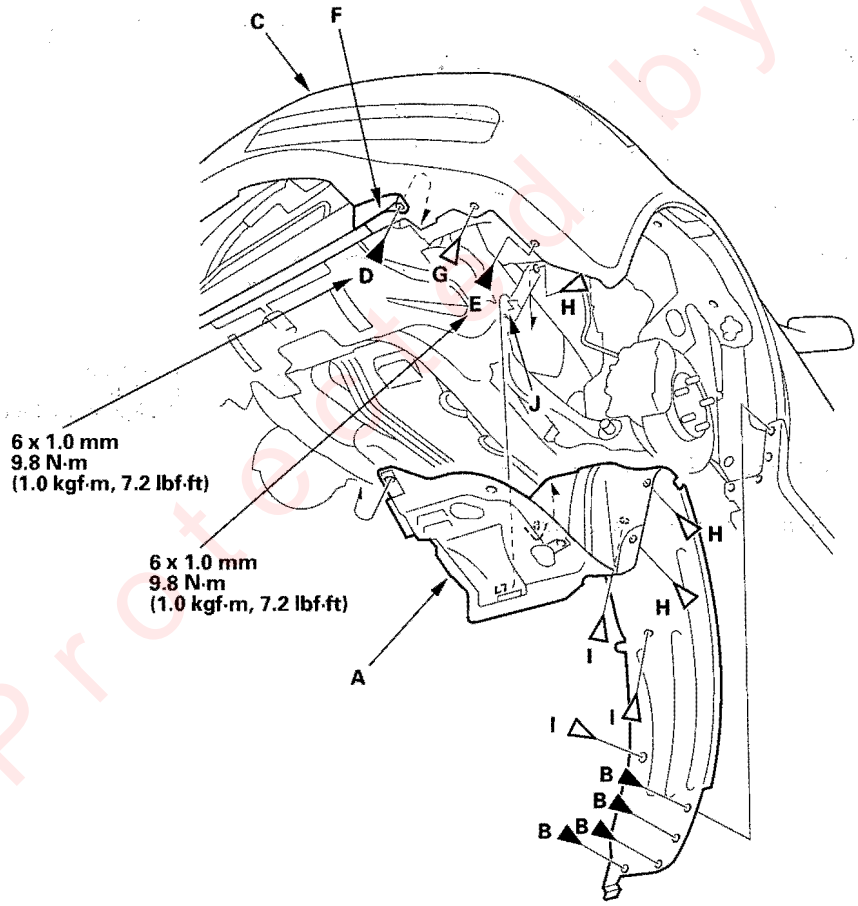

2. Install the inner fender in the reverse order of removal, and note these items:

   • Replace any damaged clips.
   • Push the clips into place securely.

Protected by AR

Splash Shield Replacement

NOTE: Take care not to scratch the body.

1. Remove the splash shield (A).
   1. From both wheel arches, remove the clips (B) securing the front inner fender (C) and splash shield to the body.
   2. From under the front bumper (D), remove the clips (E), and bolts (F).
   3. Release the hooks (G) of the splash shield, then pull the splash shield out.

Fastener Locations

B, E ▷ : Clip, 9 **F ▶ : Bolt, 2**

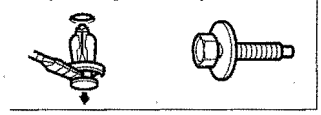

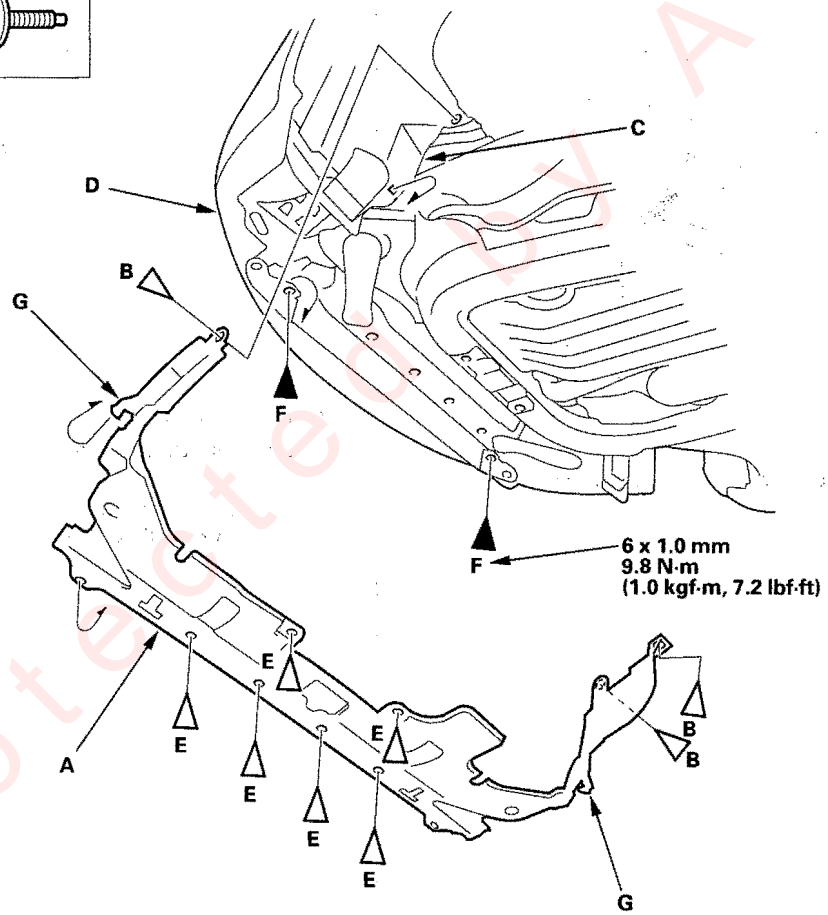

2. Install the splash shield in the reverse order of removal, and note these items:
   - Replace any damaged clips.
   - Push the clips into place securely.

Protected by AR

Front Fender Fairing Replacement

1. Remove the front inner fender (see page 20-142).
2. Remove the side marker light connector (see page 22-191).
3. Pull out the front fender fairing (A) by pushing up and releaseing the hook (B) from the bracket.

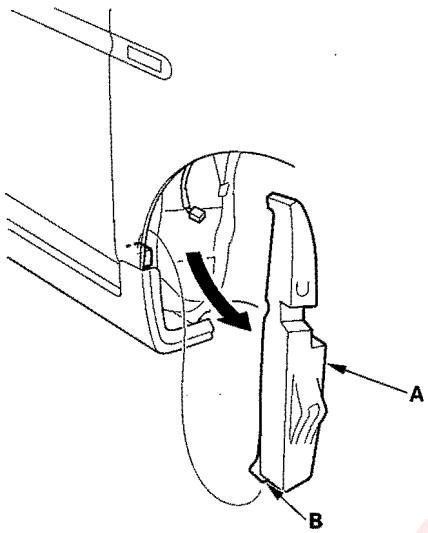

4. Install the fender fairing in the reverse order of removal.

Fuel Pipe Protector Replacement

1. Remove the clips, then remove the fuel pipe protector (A). Take care not to scratch the body.

Fastener Locations

▷ : Clip, 3

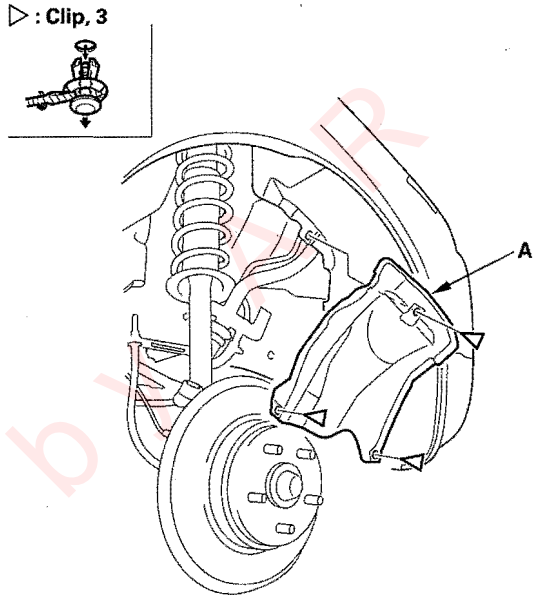

2. Install the protector in the reverse order of removal, and note these items:

- Replace any damaged clips.
- Push the clips into place securely.

Protected by

Rear Inner Fender Replacement

NOTE: Take care not to scratch the body.

1. Remove the fuel pipe protector (see page 20-144).

2. Remove the rear inner fender (A).

   1 Remove the screws (B) from the front and rear of the rear inner fender.
   2 Remove the bolts (C) and clips (D, E, F).
   3 Pull out the rear inner fender.

   NOTE: Left side shown, right side is similar.

Fastener Locations

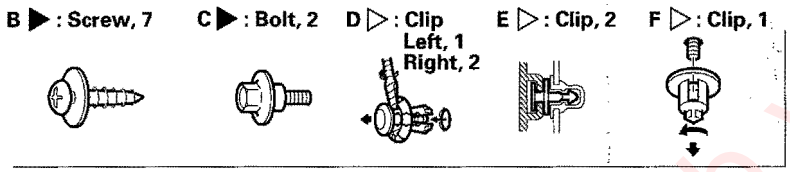

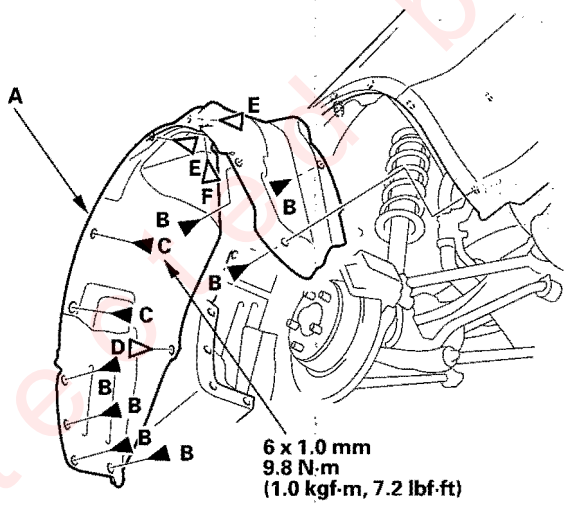

3. Install the inner fender in the reverse order of removal, and note these items:

   - Replace any damaged clips.
   - Push the clips into place securely.

Protected by A R

Rear Air Outlet Replacement

1. Remove the rear bumper (see page 20-120).
2. Detach the hooks (A), then remove the rear air outlet (B). Take care not to scratch the body.

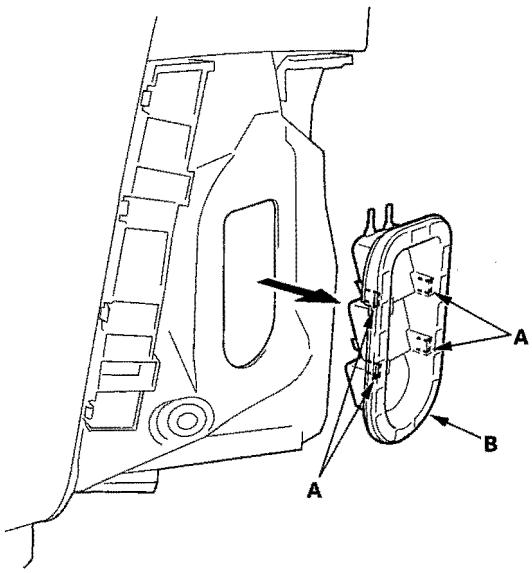

3. Install the air outlet by pushing on the hook portions until the hooks snap into place.

Protected by AR

Component Location Index

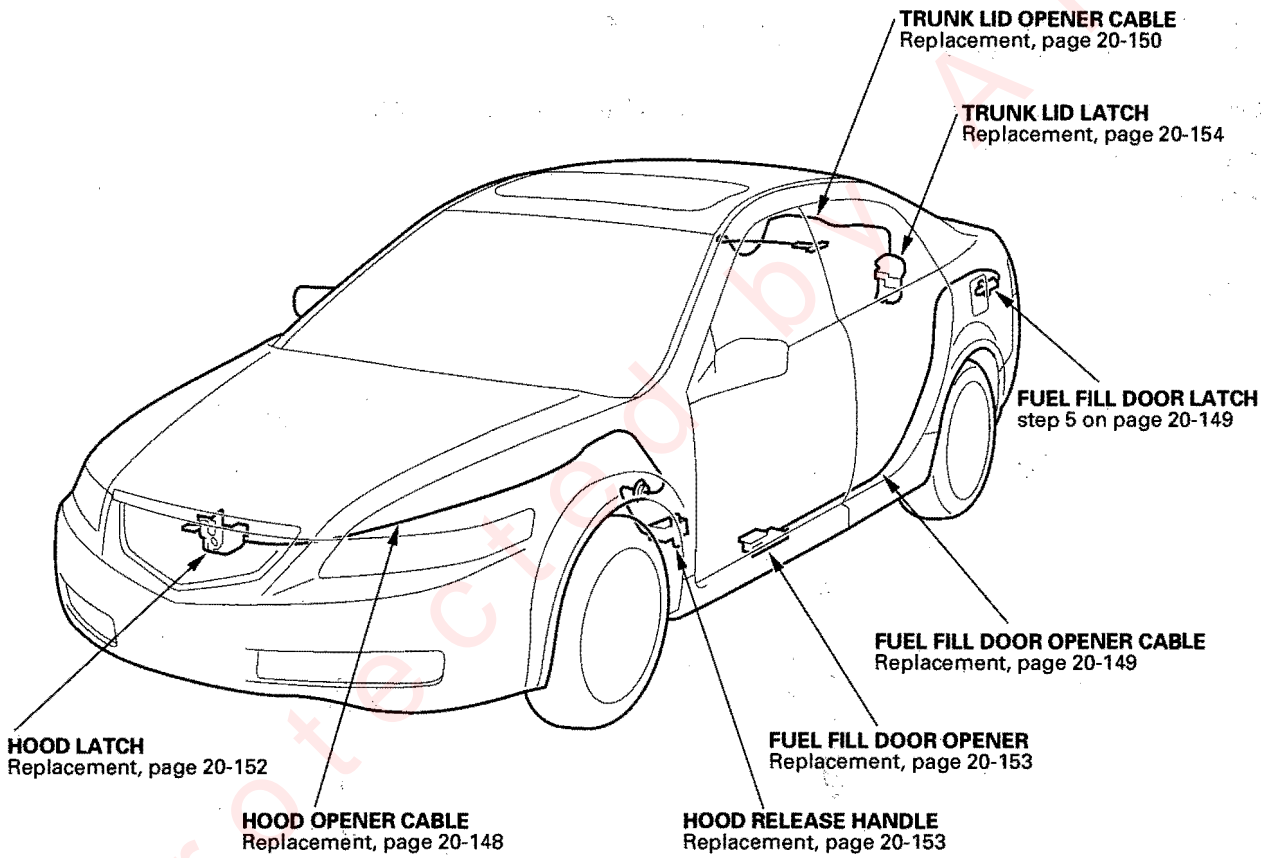

Protected by AR

Hood Opener Cable Replacement

NOTE:
- Put on gloves to protect your hands.
- Take care not to scratch the body and related parts.

1. Remove these items:

   - Right side engine compartment cover (see page 20-130)
   - Left side engine compartment cover (see page 20-130)
   - Front bulkhead cover (see page 20-130)
   - Front fender trim, left side (see page 20-131)
   - Front inner fender, left side as necessary (see page 20-142)
   - Kick panel, left side (see page 20-62)

2. Disconnect the hood opener cable (A) from the hood latch (B) (see page 20-152).

Fastener Locations

C ▷ : Clip, 7

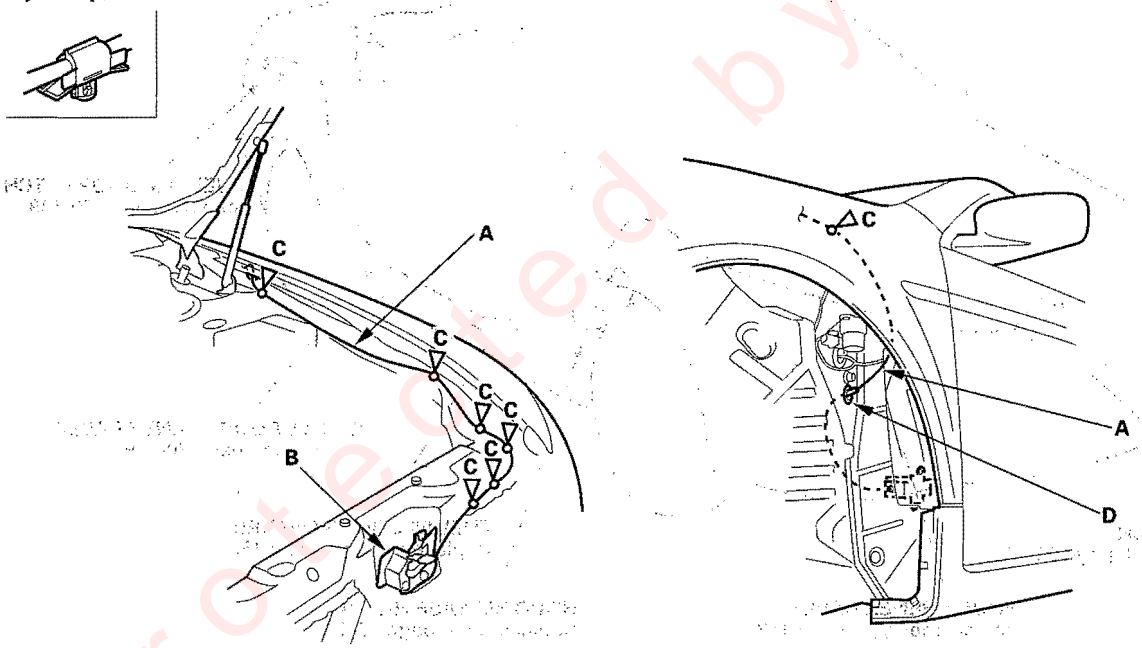

3. Using a clip remover, detach the clips (C), and remove the grommet (D) from the body, then remove the hood opener cable from the vehicle. Take care not to bend the cable.

4. Install the cable in the reverse order of removal, and replace any damaged clips.

Protected by AR

Fuel Fill Door Opener Cable Replacement

SRS components are located in this area. Review the SRS component locations (see page 23-11) and the precautions and procedures (see page 23-13) before performing repairs or service.

NOTE:
- Put on gloves to protect your hands.
- Take care not to scratch the body and related parts.

1. Remove these items from the left side of the vehicle:
   - Front door sill trim (see page 20-62)
   - Fuel fill door opener (see page 20-153)
   - Rear door sill trim (see page 20-62)
   - B-pillar lower trim (see page 20-62)
   - Rear seat cushion (see page 20-112)
   - Rear seat-back (see page 20-112)
   - Rear seat side trim (see page 20-62)
   - Trunk side trim panel (see page 20-68)
   - Rear side marker light (see page 20-191)
2. Pull the carpet back as necessary.
3. Replace the fuel fill door opener cable (A) from the olip (B).

Fastener Location

B ▷ : Clip, 1

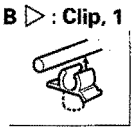

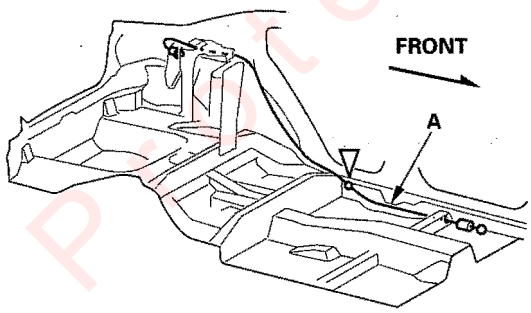

4. Remove the fuel fill door latch (A) by turning it 90° from the body.

Fastener Location

B ▷ : Clip, 1

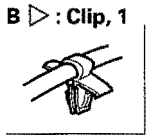

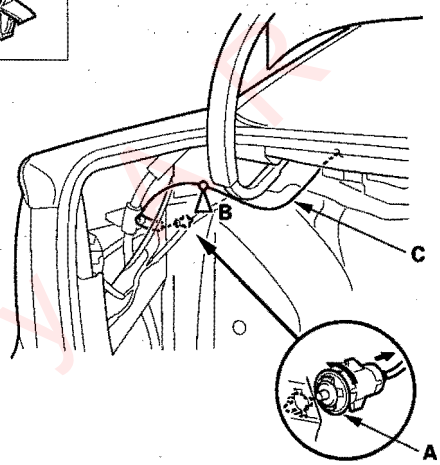

5. Use a clip remover to release the clip (B).
6. Remove the fuel fill door opener cable (C) from the vehicle. Take care not to kink the cable.

(cont'd)

Protected by FSR

Fuel Fill Door Opener Cable Replacement (cont'd)

7. Install the opener cable in the reverse order of removal, and note these items:

   - Align the marks (A) on the opener cable (B) with the cable clips (C) as shown.
   - Replace any damaged clips.

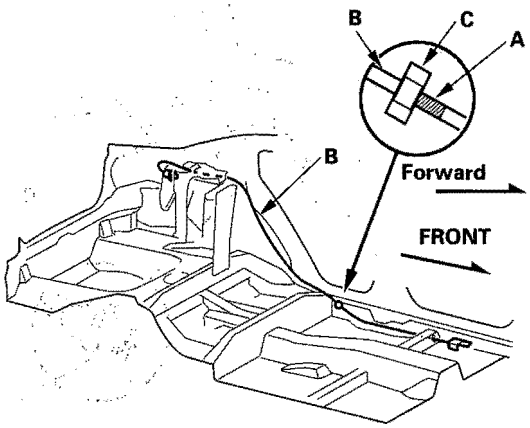

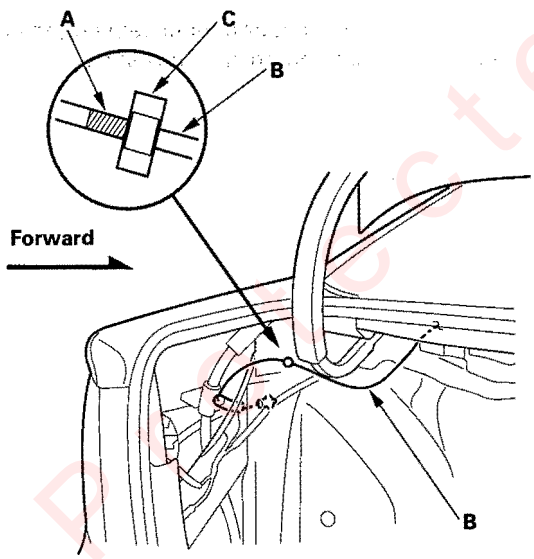

Trunk Lid Opener Cable Replacement

NOTE:
- Put on gloves to protect your hands.
- Take care not to scratch the body and related parts.

1. Remove these items:

   - Rear seat cushion (see page 20-112)
   - Rear seat-back (see page 20-112)
   - Trunk lid trim (see page 20-69)
   - Trunk lid hinge cover (see page 20-69)
   - Trunk side trim panel, left side (see page 20-68)
   - Rear shelf under cover (see page 20-68)

2. Disconnect the trunk lid opener cable (A) from the latch (B) (see page 20-154).

Fastener Locations

C ▷ : Clip, 6

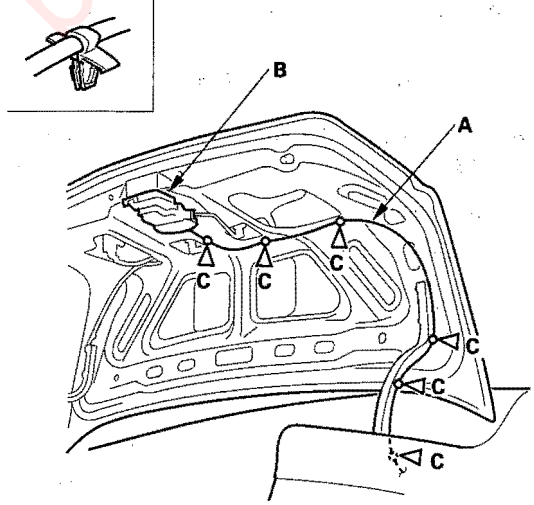

3. Use a clip remover to release the clips (C).

Protected by

4. Remove the trunk lid opener cable (A) from the opener cable bracket (B).

Fastener Locations

C ▷ : Clip, 2

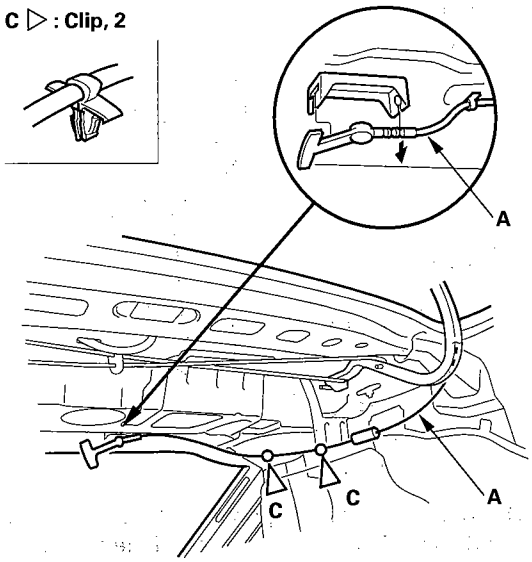

5. Use a clip remover to release the clips (C).

6. Remove the trunk lid opener cable from the vehicle. Take care not to kink the cable.

7. Install the opener cable in the reverse order of removal, and note these items:

- Align the marks (A) on the opener cable (B) with the cable clips (C) as shown.
- Replace any damaged clips.
- Push the clips into place securely.

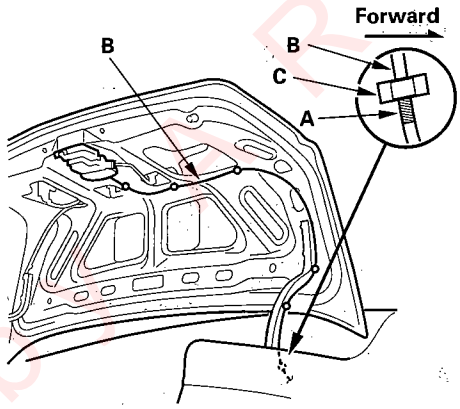

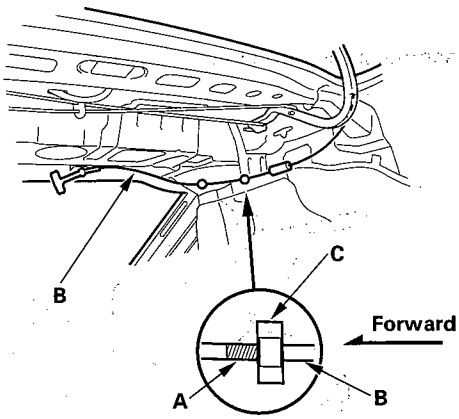

Protected by

Hood Latch Replacement

1. Remove the front bumper (see page 20-118).
2. Remove the clip and hooks (A), then remove the hood latch cover (B) from the hood latch (C).

Fastener Location

▷ : Clip, 1

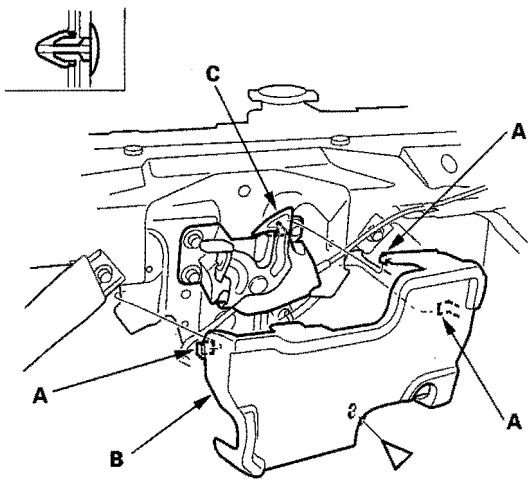

3. Disconnect the hood latch switch connector (A).

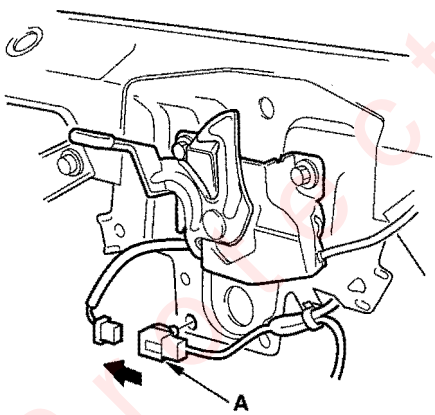

4. Remove the bolts, then remove the hood latch (A) from the body.

Fastener Locations

▶ : Bolt, 3

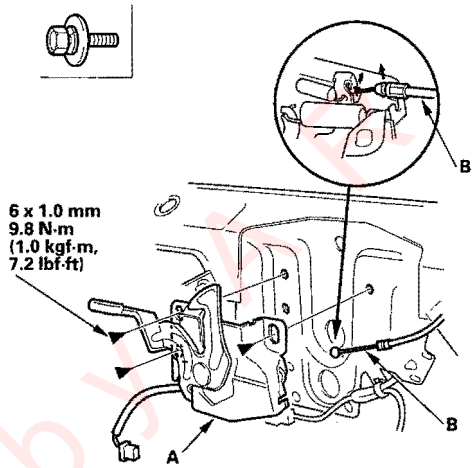

5. Disconnect the hood opener cable (B) from the hood latch. Take care not to bend the cable.
6. Install the latch in the reverse order of removal, and note these items:

- Apply multipurpose grease to the hood latch as indicated by the arrows.
- Make sure the hood opener cable is connected properly and the hood latch switch connector is plugged in properly.
- Make sure the cable actuates the latch before you close the hood.
- Adjust the hood latch alignment (see step 4 on page 20-122).
- Make sure the hood opens properly and locks securely.

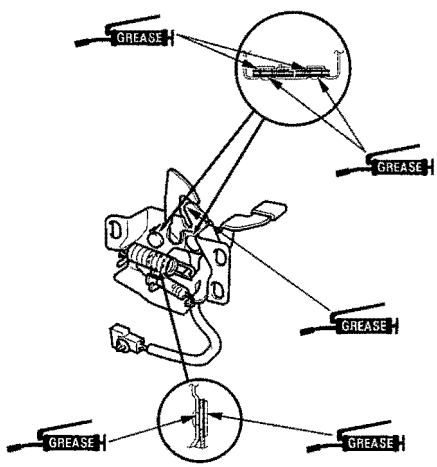

Protected by

Hood Release Handle Replacement

1. Remove the kick panel (see page 20-62).
2. Remove the bolts, then remove the hood release handle (A).

Fastener Locations

▶ : Bolt, 2

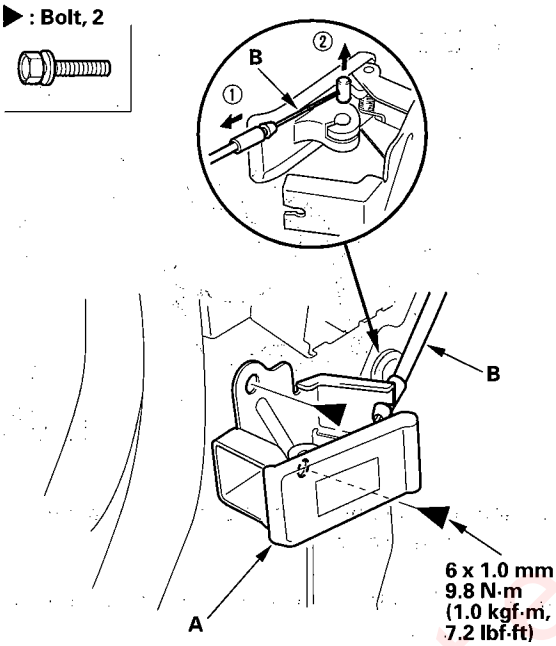

3. Disconnect the hood opener cable (B) from the hood release handle. Take care not to kink the cable.
4. Install the hood release handle in the reverse order of removal, and note these items:
   - Make sure the hood opener cable is connected properly.
   - Make sure the hood opens properly.

Fuel Fill Door Opener Replacement

1. Remove the front door sill trim, left side (see page 20-62).
2. Remove the screw and hooks (A), then remove the fuel fill door opener cover (B).

Fastener Location

▶ : Screw, 1

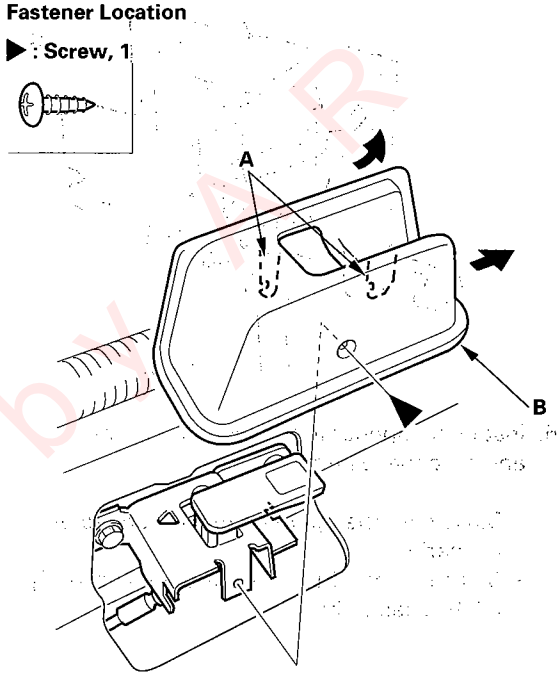

3. Remove the bolt (A).

Fastener Location

A ▶ : Bolt, 1

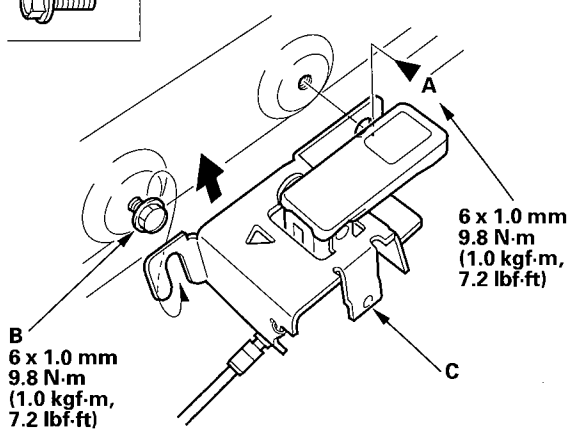

4. Loosen the bolt (B), and remove the opener (C) from the bolt.

(cont'd)

Protected by AR

Fuel Fill Door Opener Replacement (cont'd)

5. Disconnect the fuel fill door opener cable (A), then remove the opener (B). Take care not to kink the cable.

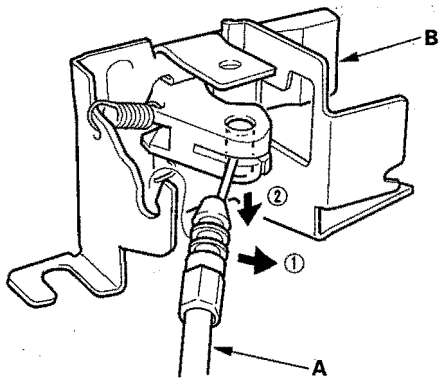

6. Install the opener in the reverse order of removal, and note these items:

   - Make sure the opener cable is connected properly.
   - Make sure the fuel fill door opens properly and latches securely.

Trunk Lid Latch Replacement

1. Disconnect the trunk lid opener cable (A) and trunk lid latch switch connector (B). Take care not to kink the opener cable.

Fastener Locations

▶ : Bolt, 2

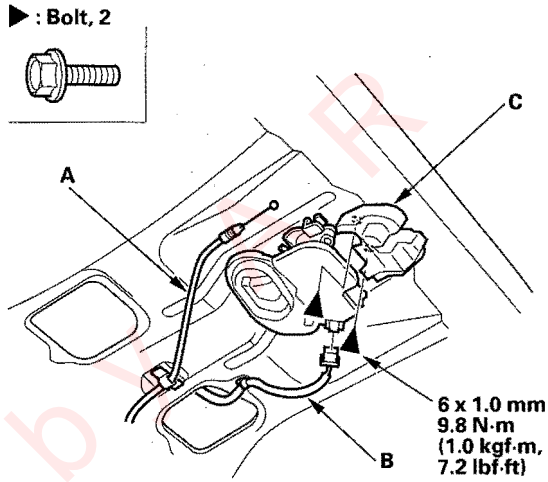

2. Remove the bolts from the trunk lid latch (C), then remove the latch.

3. Install the latch in the reverse order of removal, and note these items:

   - Make sure the connector is plugged in properly and the opener cable is connected properly.
   - Make sure the trunk lid opens properly and locks securely.

Protected by

Frame Stiffener Replacement

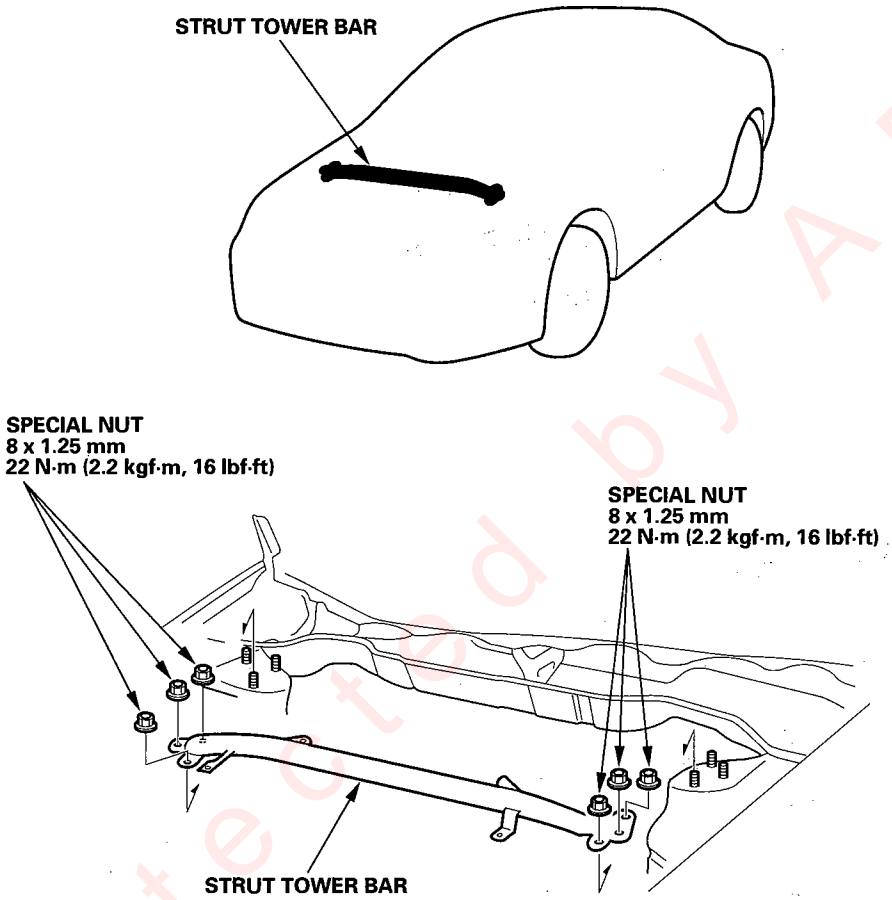

Protected by AR

Subframe Replacement

Front Subframe Torque

After removing the subframe mounting bolts, be sure to replace them with new ones.

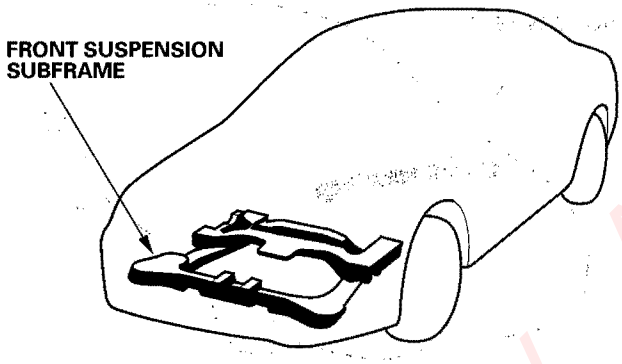

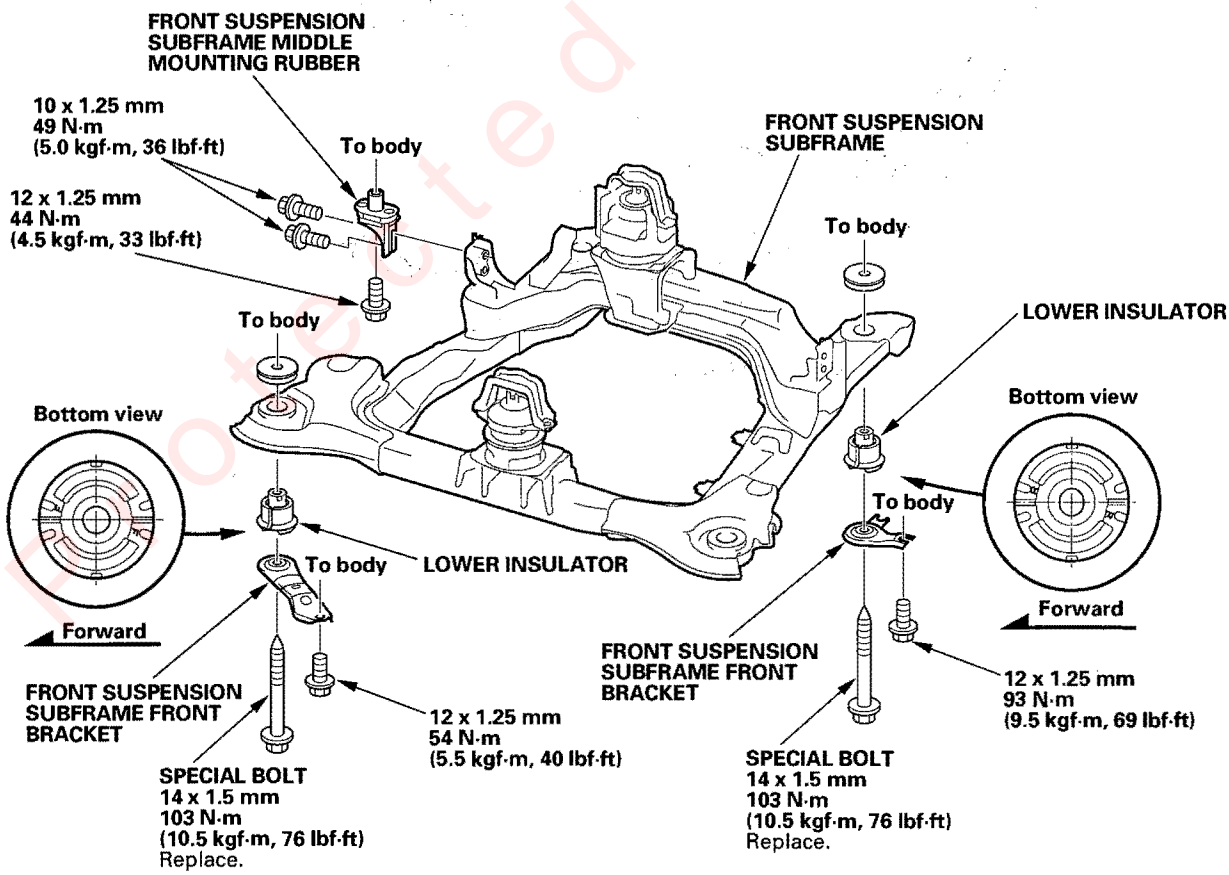

Protected by AR

Rear Subframe Torque

After removing the subframe mounting bolts, be sure to replace them with new ones.

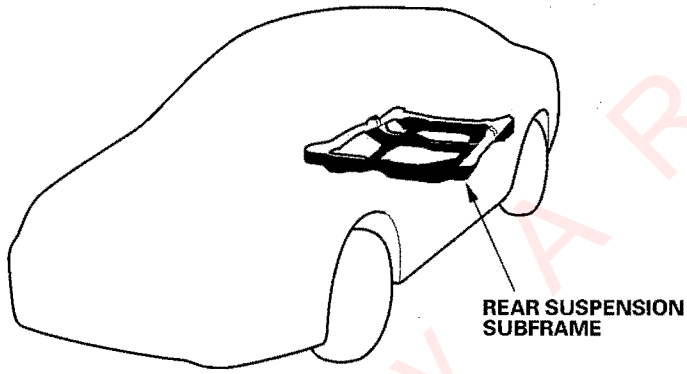

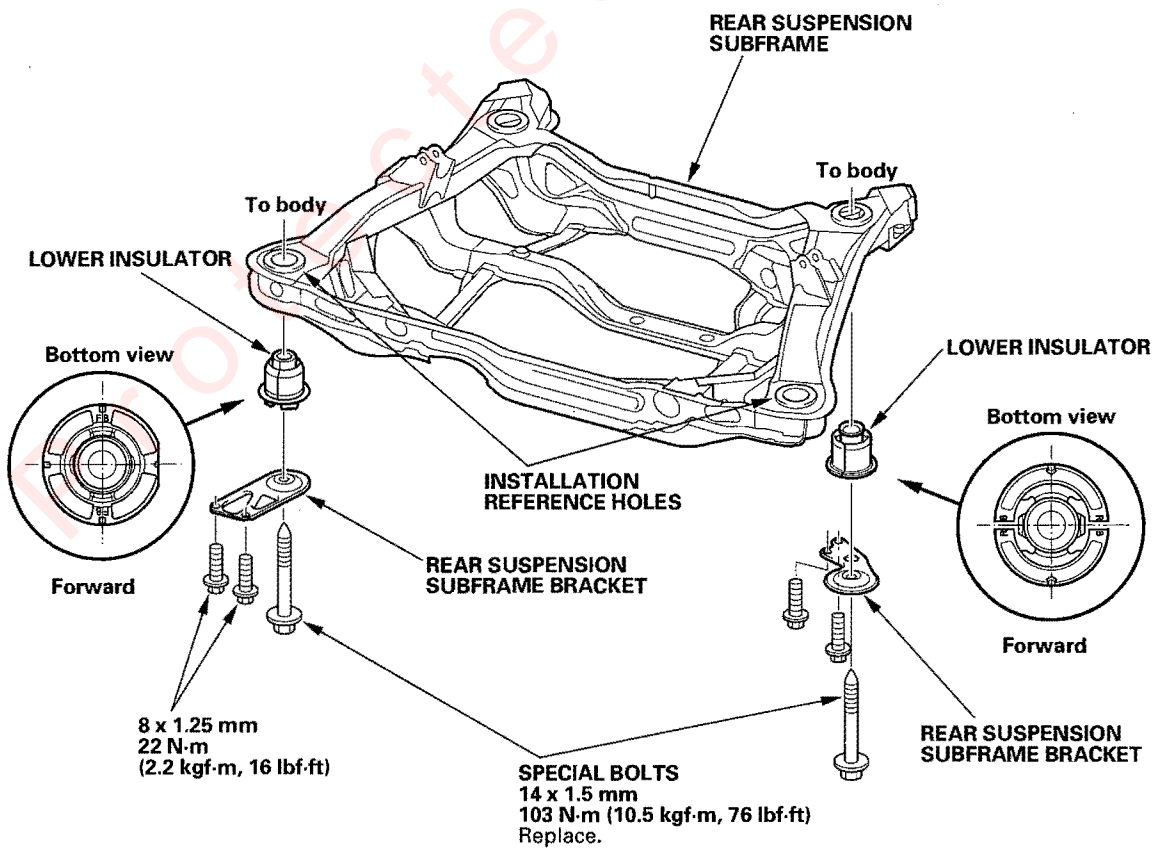

Protected by AR

Frame Repair Chart

Top View

Unit: mm (in.)
ø: Inner diameter

a	For front subframe ø16 (0.63)		e	For front upper arm ø13 (0.51)
b1	For transmission mount ø13 (0.51) Left side		f	For front upper arm ø13 (0.51)
b2	For transmission mount ø15 (0.59) Left side		g	For front subframe ø15 (0.59)
b3	For transmission mount ø13 (0.51) Left side		h	For front subframe ø16 (0.63)
c1	For engine side mount ø15 (0.59) Right side		i	Locating hole ø25 (0.98)
c2	For engine side mount ø15 (0.59) Right side		j	Locating hole ø25 (0.98)
d	Front damper center ø50 (1.97)		k	Locating hole ø15 (0.59)

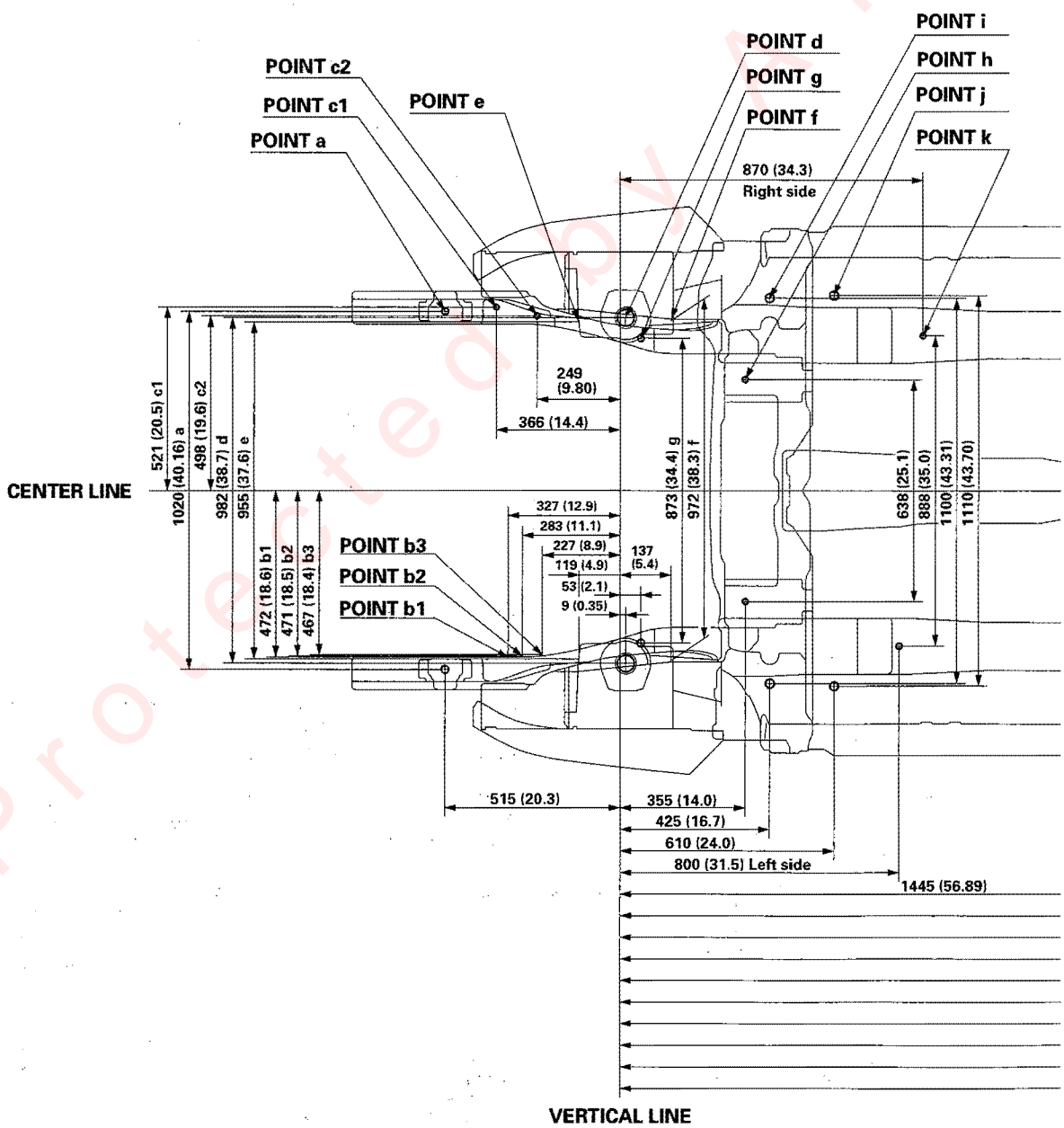

Protected by M

l	Locating hole ø25 (0.98)	q	Locating hole ø15 (0.59)
m	Locating hole ø20 (0.79)	r	Locating hole ø25 (0.98)
n	For rear subframe ø14.4 (0.57)	s	Locating hole ø11 (0.43)
o	Rear damper center ø52 (2.05)	t1, t2	For rear subframe stay ø9 (0.35)
p	For rear subframe ø14.4 (0.57)	v1, v2	For rear subframe stay ø9 (0.35)

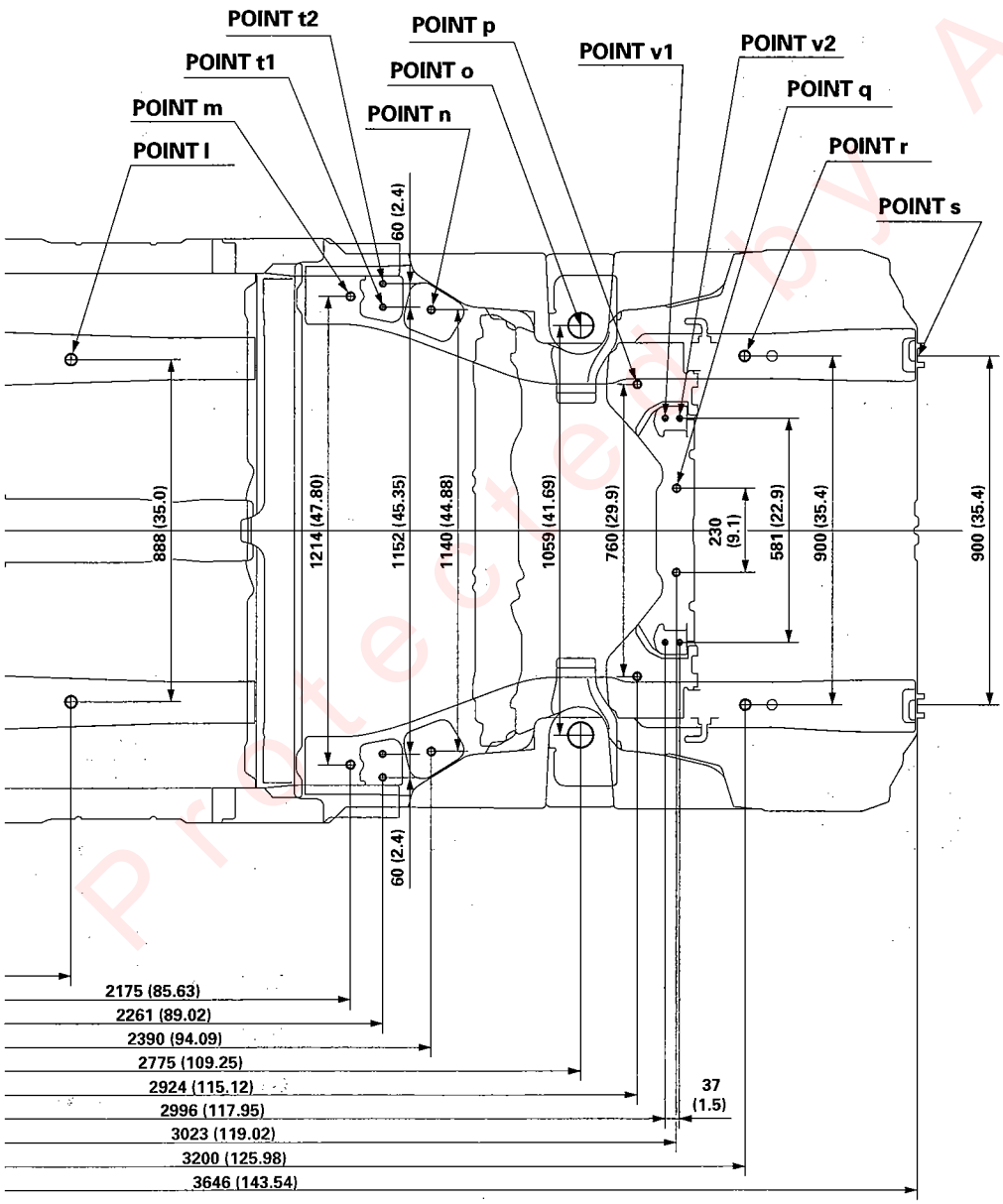

Protected by AR

(cont'd)

Frame Repair Chart (cont'd)

Side View

Unit: mm (in.)
ø: Inner diameter

a	For front subframe ø16 (0.63)		e	For front upper arm ø13 (0.51)
b1	For transmission mount ø13 (0.51) Left side		f	For front upper arm ø13 (0.51)
b2	For transmission mount ø15 (0.59) Left side		g	For front subframe ø15 (0.59)
b3	For transmission mount ø13 (0.51) Left side		h	For front subframe ø16 (0.63)
c1	For engine side mount ø15 (0.59) Right side		i	Locating hole ø25 (0.98)
c2	For engine side mount ø15 (0.59) Right side		j	Locating hole ø25 (0.98)
d	Front damper center ø50 (1.97)		k	Locating hole ø15 (0.59)

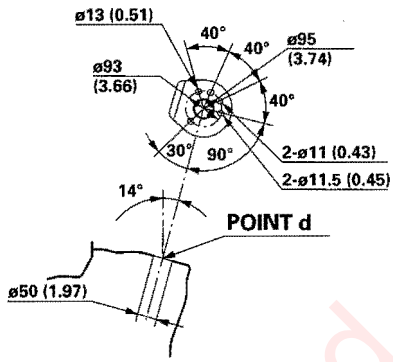

[SECTION: AA]

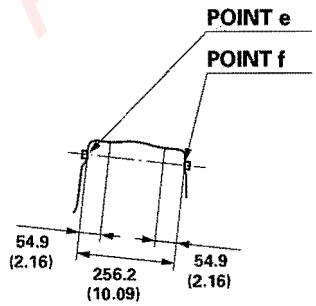

[SECTION: BB]

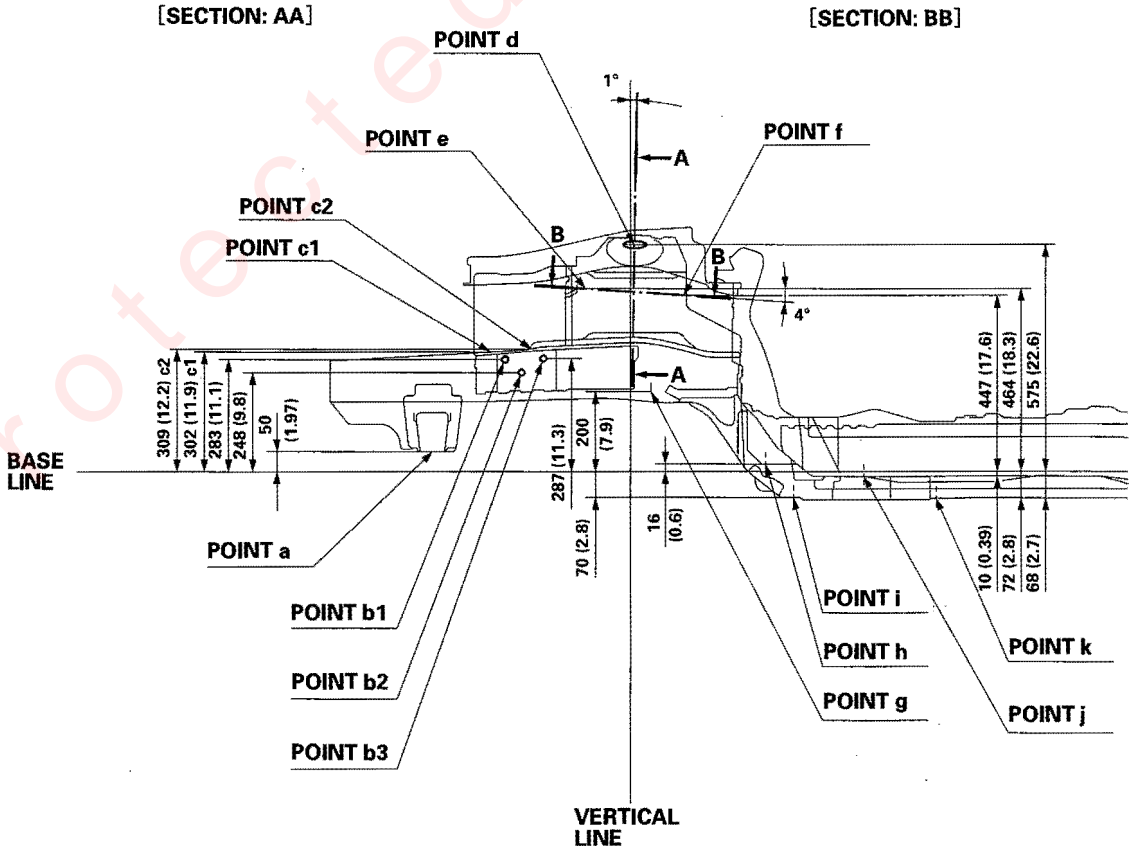

Protected by AR

l	Locating hole ø25 (0.98)	q	Locating hole ø15 (0.59)
m	Locating hole ø20 (0.79)	r	Locating hole ø25 (0.98)
n	For rear subframe ø14.4 (0.57)	s	Locating hole ø11 (0.43)
o	Rear damper center ø52 (2.05)	t1, t2	For rear subframe stay ø9 (0.35)
p	For rear subframe ø14.4 (0.57)	v1, v2	For rear subframe stay ø9 (0.35)

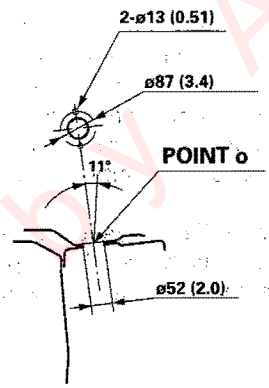

[SECTION: DD]

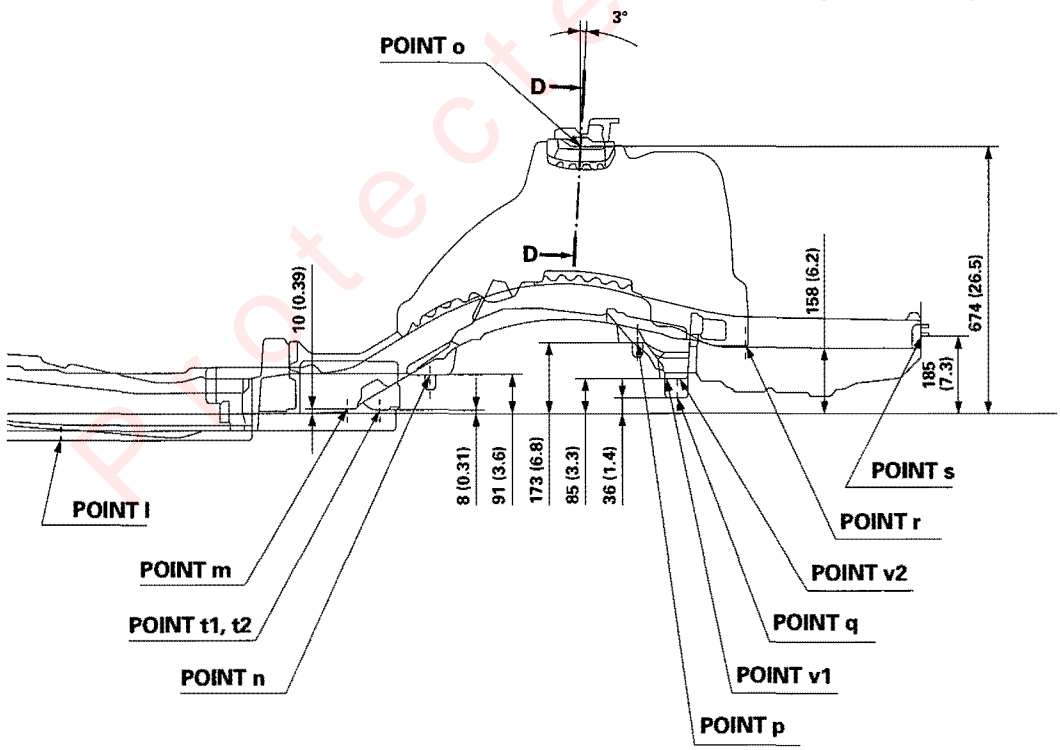

Protected by A R

SUPPLEMENTAL RESTRAINT SYSTEM (SRS) (If HVAC maintenance required)

The Acura TL SRS includes a driver's airbag in the steering wheel hub, a passenger's airbag in the dashboard above the glove box, seat belt tensioners in the front seat belt retractors, side curtain airbags in the sides of the roof, and side airbags in the front seat-backs. Information necessary to safely service the SRS is included in this Service Manual. Items marked with an asterisk (*) on the contents page include or are located near SRS components. Servicing, disassembling, or replacing these items requires special precautions and tools, and should be done only by an authorized Acura dealer.

- To avoid rendering the SRS inoperative, which could lead to personal injury or death in the event of a severe frontal collision, all SRS service work must be performed by an authorized Acura dealer.
- Improper service procedures, including incorrect removal and installation of the SRS, could lead to personal injury caused by unintentional deployment of the airbags and/or side airbags.
- Do not bump or impact the SRS unit, front impact sensors, side impact sensors whenever the ignition switch is ON (II), or for at least 3 minutes after the ignition switch is turned OFF. Otherwise, the system may fail in a collision, or airbags may deploy.
- SRS electrical connectors are identified by yellow color coding. Related components are located in the steering column, front console, dashboard, dashboard lower panel, in the dashboard above the glove box, in the front seats, in the roof side, and around the floor. Do not use electrical test equipment on these circuits.

Protected by A R

HVAC (Heating, Ventilation, and Air Conditioning)

Climate Control

Special Tools 21-2
Component Location Index 21-3
A/C Service Tips and Precautions 21-6
A/C Refrigerant Oil Replacement 21-6
General Troubleshooting Information 21-8
DTC Troubleshooting Index 21-13
Symptom Troubleshooting Index 21-14
System Description 21-15
Circuit Diagram 21-22
DTC Troubleshooting 21-24
Recirculation Control Motor Circuit Troubleshooting 21-49
Climate Control Power and Ground Circuit Troubleshooting 21-51
Radiator and Condenser Fan Low Speed Circuit Troubleshooting 21-52
Condenser Fan High Speed Circuit Troubleshooting 21-56
Radiator and Condenser Fan High Speed Circuit Troubleshooting 21-58
Compressor Clutch Circuit Troubleshooting 21-59
A/C Pressure Switch Circuit Troubleshooting 21-61
In-car Temperature Sensor Test 21-63
In-car Temperature Sensor Replacement 21-63
Outside Air Temperature Sensor Test 21-64
Outside Air Temperature Sensor Replacement 21-64
Sunlight Sensor Test 21-65
Sunlight Sensor Replacement ... 21-65
Evaporator Temperature Sensor Test 21-66
Evaporator Temperature Sensor Replacement 21-66
Power Transistor Test 21-67
Driver's Air Mix Control Motor Test 21-68
Driver's Air Mix Control Motor Replacement 21-68
Passenger's Air Mix Control Motor Test 21-69
Passenger's Air Mix Control Motor Replacement 21-69
Driver's Mode Control Motor Test 21-70
Driver's Mode Control Motor Replacement 21-70
Passenger's Mode Control Motor Test 21-71
Passenger's Mode Control Motor Replacement 21-71
Recirculation Control Motor Test 21-72
Recirculation Control Motor Replacement 21-72
Climate Control Switch Assembly Removal and Installation 21-73
Climate Control Unit Removal and Installation 21-73
Dust and Pollen Filter Replacement 21-74
Blower Unit Removal and Installation 21-74
Blower Unit Component Replacement 21-75
Evaporator Core Replacement ... 21-75
* Heater Unit/Core Replacement 21-76
Heater Valve Cable Adjustment 21-79
Compressor Replacement 21-80
Compressor Clutch Check 21-82
Compressor Clutch Overhaul 21-83
Compressor Relief Valve Replacement 21-84
Condenser Replacement 21-85
Receiver/Dryer Desiccant Replacement 21-87
Refrigerant Recovery 21-88
System Evacuation 21-89
System Charging 21-90
Refrigerant Leak Test 21-91
A/C System Test 21-92

Protected by ARR

Special Tools

Ref. No.	Tool Number	Description	Qty
①	07SAZ-001000A	Backprobe Set	2

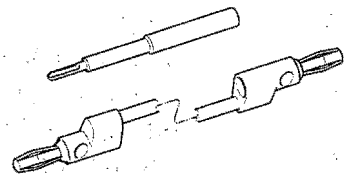

①

Protected by A R

Component Location Index

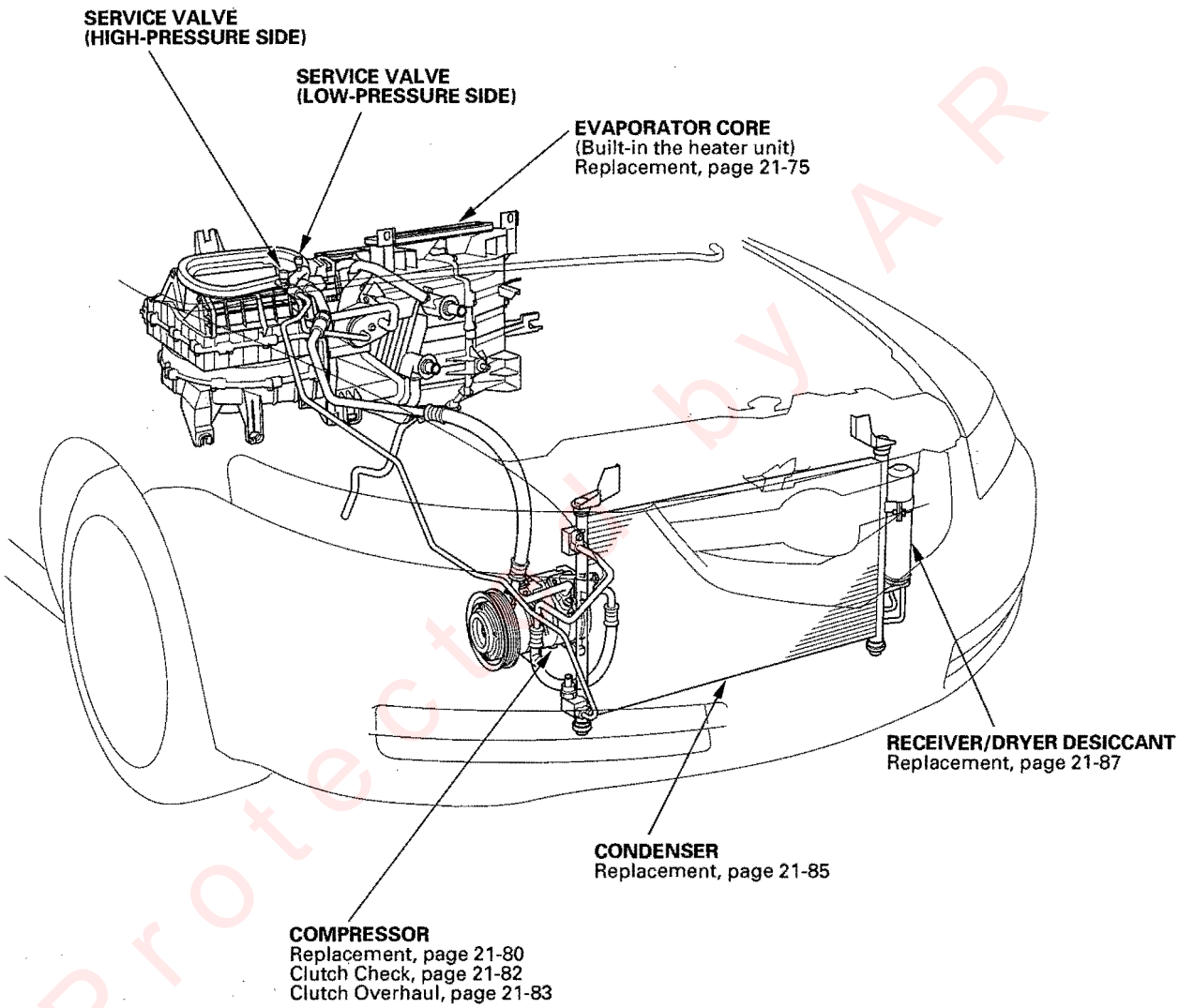

Protected by AR

(cont'd)

Component Location Index (cont'd)

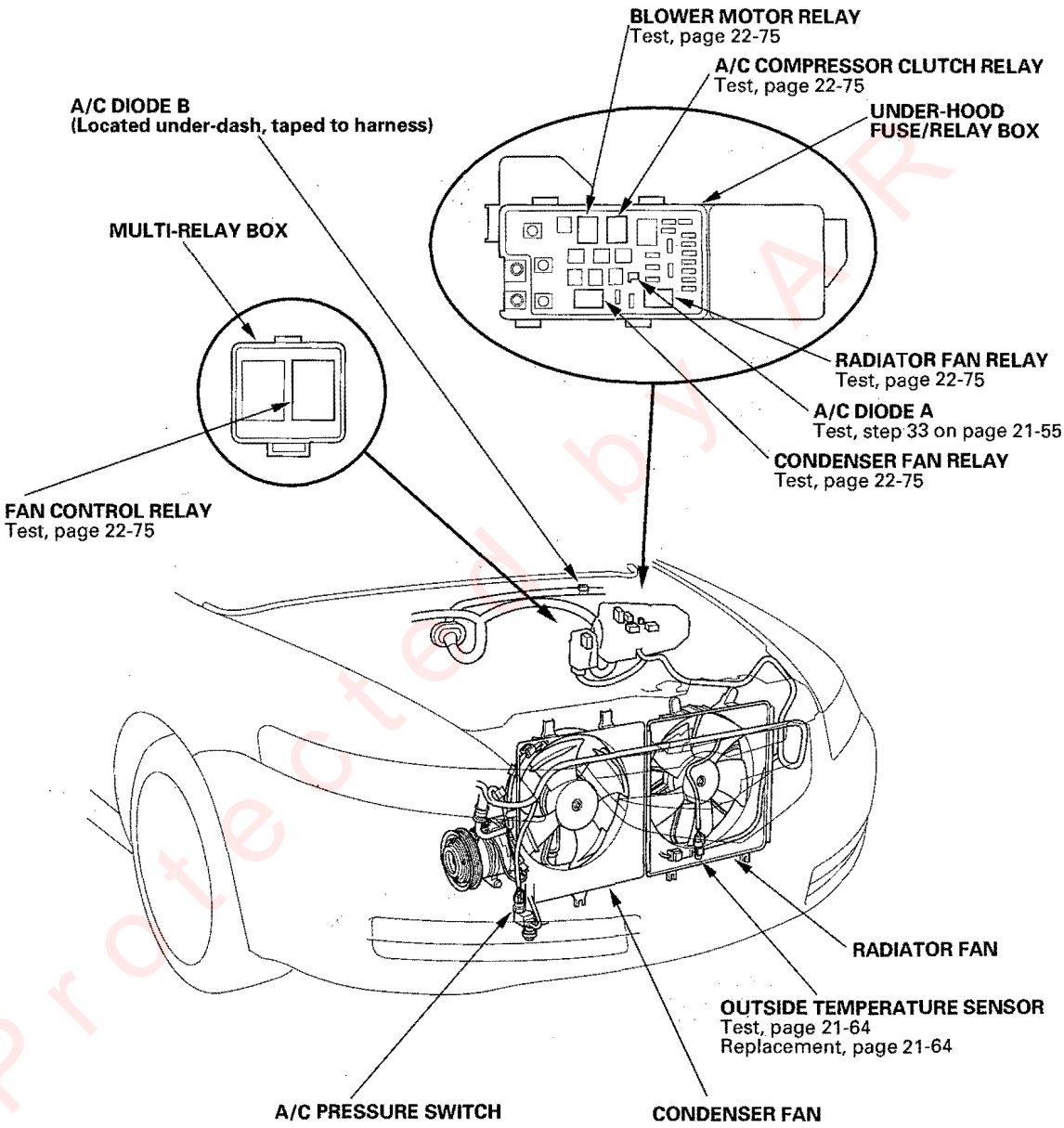

Protected by AR

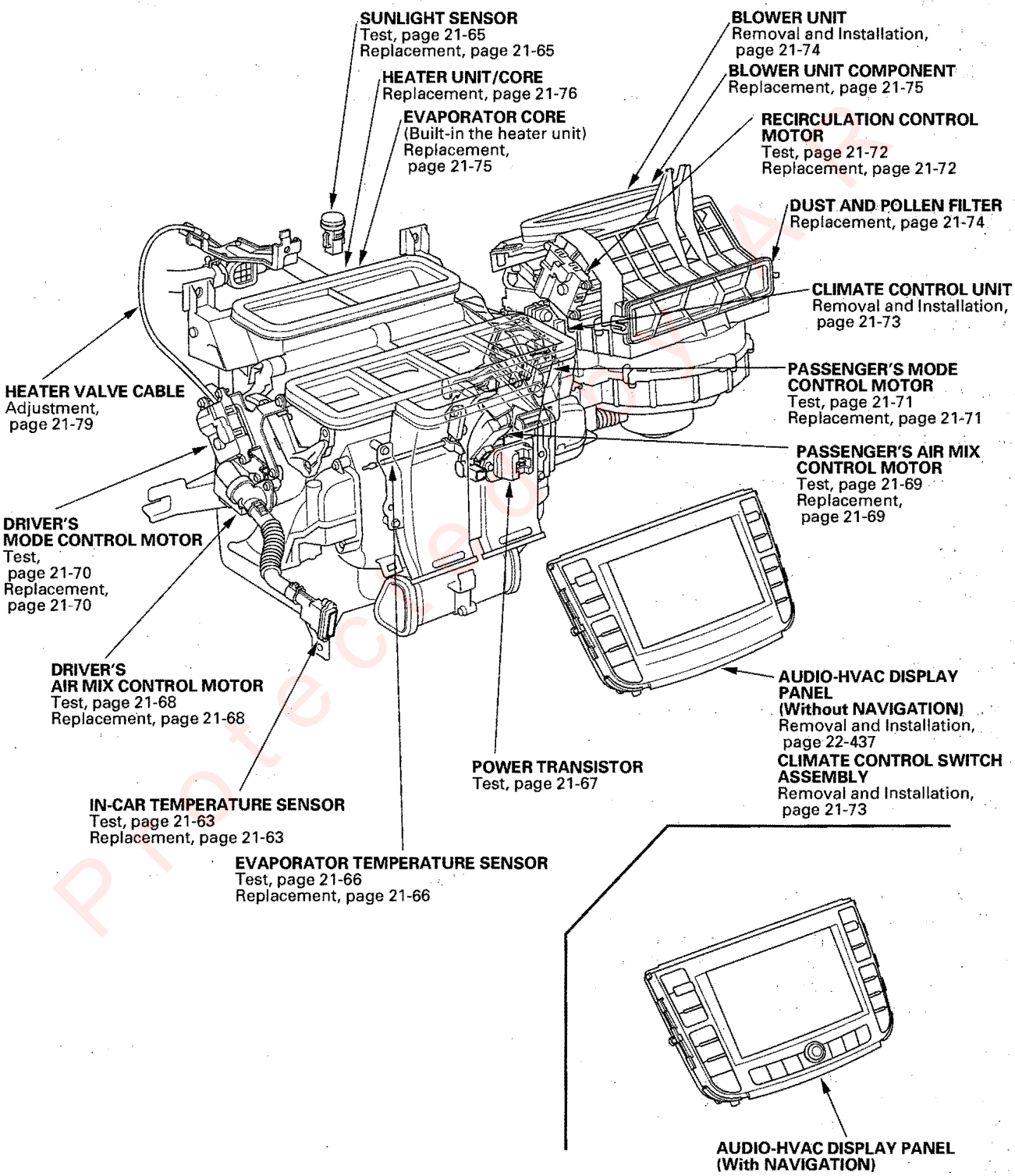

Protected by COPYRIGHT

A/C Service Tips and Precautions

⚠ WARNING

- Compressed air mixed with R-134a forms a combustible vapor.
- The vapor can burn or explode causing serious injury.
- Never use compressed air to pressure test R-134a service equipment or vehicle air conditioning systems.

⚠ CAUTION

- Air conditioning refrigerant or lubricant vapor can irritate your eyes, nose, or throat.
- Be careful when connecting service equipment.
- Do not breathe refrigerant or vapor.

The air conditioning system uses HFC-134a (R-134a) refrigerant and polyalkyleneglycol (PAG) refrigerant oil, which are not compatible with CFC-12 (R-12) refrigerant and mineral oil. Do not use R-12 refrigerant or mineral oil in this system, and do not attempt to use R-12 servicing equipment; damage to the air conditioning system or your servicing equipment will result.
Use only service equipment that is U.L.-listed and is certified to meet the requirements of SAE J2210 to remove R-134a from the air conditioning system.

If accidental system discharge occurs, ventilate work area before resuming service.

R-134a service equipment or vehicle air conditioning systems should not be pressure tested or leak tested with compressed air.

Additional health and safety information may be obtained from the refrigerant and lubricant manufacturers.

- Always disconnect the negative cable from the battery whenever replacing air conditioning parts.
- Keep moisture and dirt out of the system. When disconnecting any lines, plug or cap the fittings immediately; don't remove the caps or plugs until just before you reconnect each line.
- Before connecting any hose or line, apply a few drops of refrigerant oil to the O-ring.
- When tightening or loosening a fitting, use a second wrench to support the matching fitting.
- When discharging the system, use a R-134a refrigerant recovery/recycling/charging station; don't release refrigerant into the atmosphere.

A/C Refrigerant Oil Replacement

Recommended PAG oil: DENSO ND-OIL 8

- P/N 38897-PR7-A01AH: 120 mℓ (4 fl·oz)
- P/N 38899-PR7-A01: 40 mℓ (1 1/3 fl·oz)

Add the recommended refrigerant oil in the amount listed if you replace any of the following parts.

- To avoid contamination, do not return the oil to the container once dispensed, and never mix it with other refrigerant oils.
- Immediately after using the oil, reinstall the cap on the container, and seal it to avoid moisture absorption.
- Do not spill the refrigerant oil on the vehicle; it may damage the paint; if it gets on the paint, wash it off immediately.

Condenser .....25 mℓ (5/6 fl·oz)
Evaporator .....45 mℓ (1 1/2 fl·oz)
Line or hose .....10 mℓ (1/3 fl·oz)
Receiver/Dryer .....10 mℓ (1/3 fl·oz)
Leakage repair .....25 mℓ (5/6 fl·oz)
Compressor .....For compressor replacement, subtract the volume of oil drained from the removed compressor from 120 mℓ (4 fl·oz), and drain the calculated volume of oil from the new compressor: 120 mℓ (4 fl·oz) − Volume of removed compressor = Volume to drain from new compressor.

NOTE: Even if no oil is drained from the removed compressor, don't drain more than 50 mℓ (1 2/3 fl·oz) from the new compressor.

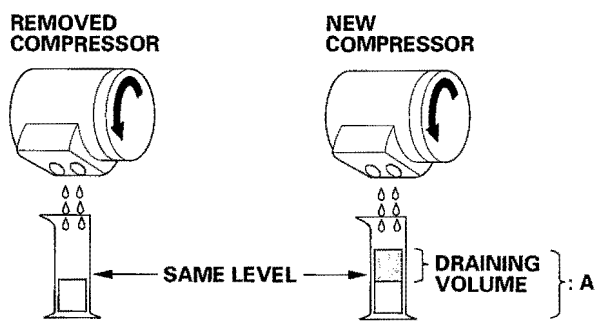

A: 120 mℓ (4 fl·oz)

Protected by A R

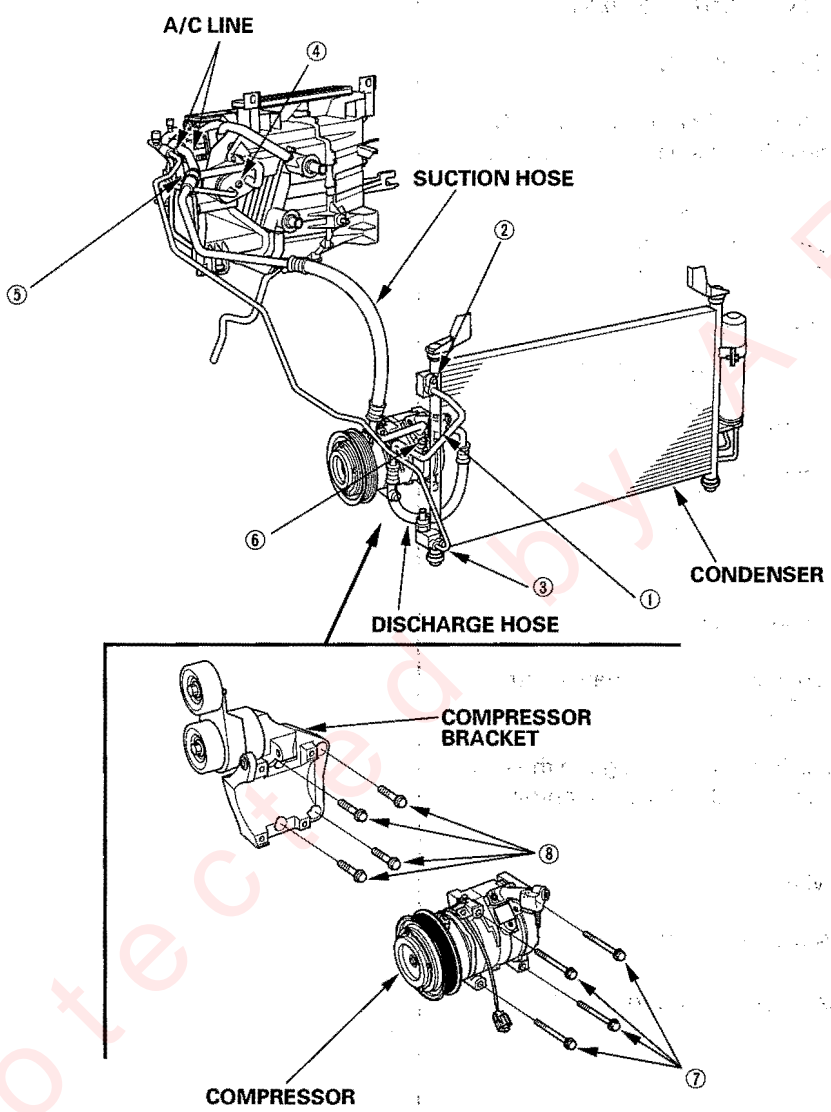

① Discharge hose to the compressor (6 x 1.0 mm) : 9.8 N·m (1.0 kgf·m, 7.2 lbf·ft)
② Discharge hose to the condenser (6 x 1.0 mm) : 9.8 N·m (1.0 kgf·m, 7.2 lbf·ft)
③ A/C line to the condenser (6 x 1.0 mm) : 9.8 N·m (1.0 kgf·m, 7.2 lbf·ft)
④ A/C line to the evaporator (6 x 1.0 mm) : 9.8 N·m (1.0 kgf·m, 7.2 lbf·ft)
⑤ A/C line to the suction hose: 31 N·m (3.2 kgf·m, 23 lbf·ft)
⑥ Suction hose to the compressor (6 x 1.0 mm) : 9.8 N·m (1.0 kgf·m, 7.2 lbf·ft)
⑦ Compressor to the compressor bracket (8 x 1.25 mm) : 22 N·m (2.2 kgf·m, 16 lbf·ft)
⑧ Compressor bracket to the engine block (10 x 1.25 mm) : 44 N·m (4.5 kgf·m, 33 lbf·ft)

protected by A R

General Troubleshooting Information

How to Check for DTCs with the HDS

1. Make sure the ignition switch is OFF.
2. Connect the HDS to the data link connector (DLC) (A) located under the driver's side of the dashboard.

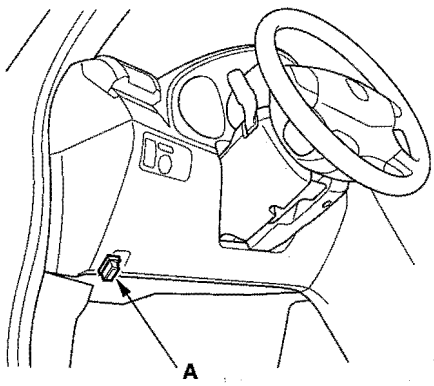

3. Turn the ignition switch ON (II).
4. Select DTCs in the body electrical/climate control mode MENU of the HDS.
5. Check for DTCs. If a DTC is indicated, go to the next step. If no DTC(s) is indicated, refer to symptom troubleshooting.
6. Turn the ignition switch OFF.
7. Disconnect the HDS from the DLC.
8. Do the troubleshooting procedure for the DTC indicated.

Protected by AR

How to Retrieve a DTC (Without HDS)

The climate control unit has a self-diagnostic function. To run the self-diagnostic function, do the following:

NOTE: Before troubleshooting the climate control system, refer to B-CAN System Diagnosis Test Mode A Troubleshooting (see page 22-108).

1. Turn the ignition switch ON (II).
2. Press and hold the OFF button. While holding the OFF button, press the recirculation button five times within 10 seconds. Release the OFF button and the self-diagnostic will begin.

   NOTE: The blower motor can be run at any speed regardless of what the panel is displaying.

Without Navigation System:

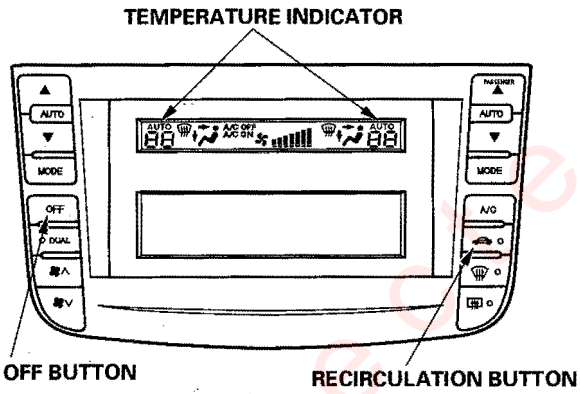

With Navigation System:

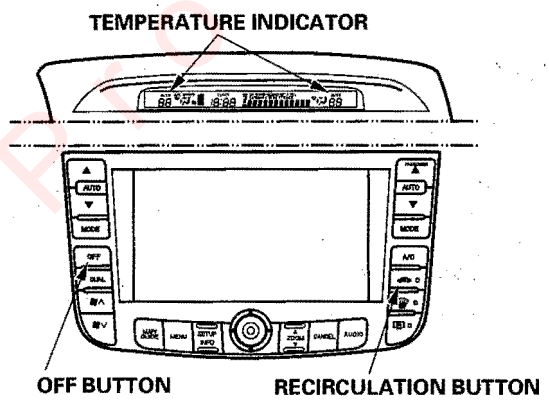

If there is any problem in the system, the temperature indicator will light up the segment (A through S) corresponding to the error. The temperature indicator will then alternate every second between displaying "88" (all segments lit) and the error code segment (A through S). To determine the meaning of the DTC, refer to the DTC Troubleshooting Index.

If there are no problems detected, the segments will not illuminate.

DRIVER'S SIDE TEMPERATURE INDICATOR

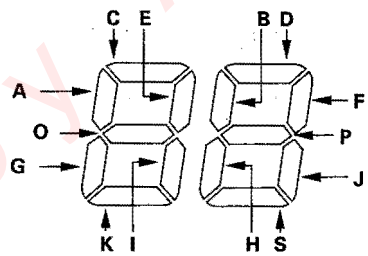

PASSENGER'S SIDE TEMPERATURE INDICATOR

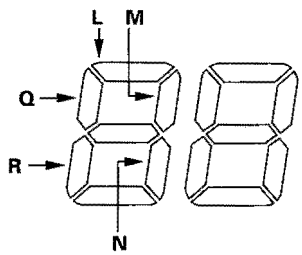

Canceling the Self-diagnostic Function

3. Turn the ignition switch OFF to cancel the self-diagnosis function. After completing repair work, run the self-diagnostic function again to make sure that there are no other malfunctions.

(cont'd)

Protected by AR

General Troubleshooting Information (cont'd)

Checking DTCs by DTC Indicator

NOTE: Before troubleshooting the climate control system, refer to B-CAN System Diagnosis Test Mode A Troubleshooting (see page 22-108).

To retrieve the DTC, you must run the self-diagnostic function. In the case of multiple problems, the respective indicator segments will come on. If indicator segments A, C, E, G, I, L, O and Q come on at the same time, there may be an open in the common ground wire.

DRIVER'S TEMPERATURE INDICATOR

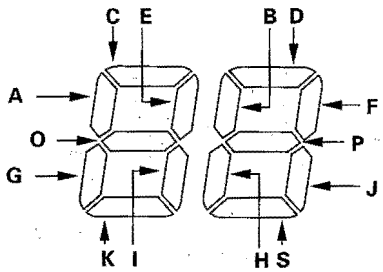

PASSENGER'S TEMPERATURE INDICATOR

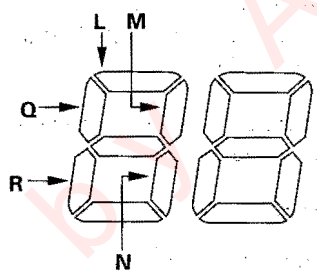

DTC (Temperature Indicator segment)	Detection Item	Page
A	An open in the in-car temperature sensor circuit	(see page 21-24)
B	A short in the in-car temperature sensor circuit	(see page 21-25)
C	An open in the outside air temperature sensor circuit	(see page 21-26)
D	A short in the outside air temperature sensor circuit	(see page 21-27)
E	An open in the sunlight sensor circuit	(see page 21-28)
F	A short in the sunlight sensor circuit	(see page 21-30)
G	An open in the evaporator temperature sensor circuit	(see page 21-31)
H	A short in the evaporator temperature sensor circuit	(see page 21-32)
I	An open in the driver's air mix control motor circuit	(see page 21-33)
J	A short in the driver's air mix control motor circuit	(see page 21-34)
K	A problem in the driver's air mix control linkage, door, or motor	(see page 21-36)
L	An open in the passenger's air mix control motor circuit	(see page 21-36)
M	A short in the passenger's air mix control motor circuit	(see page 21-37)
N	A problem in the passenger's air mix control linkage, door, or motor	(see page 21-39)
O	An open or short in the driver's mode control motor circuit	(see page 21-39)
P	A problem in the driver's mode control linkage, doors, or motor	(see page 21-41)
Q	An open or short in the passenger's mode control motor circuit	(see page 21-42)
R	A problem in the passenger's mode control linkage, doors, or motor	(see page 21-44)
S	A problem in the blower motor circuit	(see page 21-44)

Printed by A R

Displaying Sensor Inputs at the Climate Control Unit

The climate control unit has a mode that displays sensor inputs it receives. This mode shows you what the climate control unit is receiving from each of the sensors, one at a time, and it can help you determine if a sensor is faulty.

Check these items before using the sensor input display mode

1. Turn the ignition switch ON (II), and check the recirculation door function; press the recirculation button to switch from FRESH to RECIRC. The air volume and sound should change slightly.

2. Set the temperature control knob to the desired test temperature. When selecting the test temperatures, note these items:

   - "Lo" temperature setting will default to MAX COOL, VENT, and RECIRC.
   - "Hi" temperature setting will default to MAX HOT, FLOOR, and FRESH.
   - 61 through 89°F settings will use the automatic climate control logic.

3. Turn the ignition switch OFF.

To run the sensor input display mode, follow these steps

1. Turn the ignition switch OFF.

2. Press and hold both the passenger's AUTO and recirculation buttons, then start the engine.

3. After the engine starts, release the buttons. The display panel control unit will flash the sensor number and then the value for that sensor. Record the value displayed.

4. To advance to the next sensor, press the recirculation button.

Sensor	Item	Displayed Value
1	In-car Temperature Sensor	℃
2	Ambient Temperature	℃
3	Solar Radiation Sensor Value: Dark = 00, Flashlight = 04, Cloudy =10, Sunny =65	Kcal/m2·h
4	Engine coolant Temperature	℃
5	Evaporator Outlet Air Temperature	℃
6	Driver's Air Mix Opening (Low value indicates cooler air distribution, higher value indicates warmer air distribution)	% of opening
7	Passenger's Air Mix Opening (Low value indicates cooler air distribution, higher value indicates warmer air distribution)	% of opening
8	Vehicle Speed (Vehicle must be driven to display speed)	Km/h
9	Vent Temperature Air Out (TAO)	℃

NOTE:
- The sensor values will be displayed in degrees Celsius (℃) or an alphanumeric code. Use the chart to convert the value to degrees Fahrenheit (℉).
- If the sensor value displays "Er" this indicates there is an open or short in the circuit or sensor. Check for DTCs using the HDS, or refer to checking DTCs by DTC indication to check for DTCs.
- If necessary, compare the sensor input display to an alike, known-good vehicle under the same test conditions.
- If the sensor is out of the normal range, refer to the sensor test, or substitute the sensor with a known-good, and recheck.

5. To cancel the sensor input display mode, press the AUTO button, or turn the ignition off.

(cont'd)

Protected by AR

General Troubleshooting Information (cont'd)

Celsius to Fahrenheit Conversion Table

℃	℉	℃	℉	℃	℉	℃	℉	℃	℉
0	32	10	50	20	68	30	86	40	104
1	34	11	52	21	70	31	88	41	106
2	36	12	54	22	72	32	90	42	108
3	37	13	55	23	73	33	91	43	109
4	39	14	57	24	75	34	93	44	111
5	41	15	59	25	77	35	95	45	113
6	43	16	61	26	79	36	97	46	115
7	45	17	63	27	81	37	99	47	117
8	46	18	64	28	82	38	100	48	118
9	48	19	66	29	84	39	102	49	120

℃	℉	℃	℉	℃	℉	℃	℉	℃	℉
50	122	60	140	70	158	80	176	90	194
51	124	61	142	71	160	81	178	91	196
52	126	62	144	72	162	82	180	92	198
53	127	63	145	73	163	83	181	93	199
54	128	64	147	74	165	84	183	94	201
55	131	65	149	75	167	85	185	95	203
56	133	66	151	76	169	86	187	96	205
57	135	67	152	77	170	87	188	97	207
58	136	68	154	78	172	88	190	98	208
59	139	69	158	79	174	89	192	99	210

Alphanumeric Conversion Table

Display Reading (Alphanumeric)	℃	℉	%
A1 thru A9	−1 thru −9	30 thru 16	−1 thru −9
B0 thru B9	−10 thru −19	14 thru −2	−10 thru −19
C0 thru C9	−20 thru −29	−4 thru −20	−20 thru −29
D0 thru D9	−30 thru −39	−22 thru −38	−30 thru −39
E0 thru E9	−40 thru −49	−40 thru −58	———
F0 thru F9	−50 thru −59	−58 thru −74	+100 thru +109

Protected by A R

DTC Troubleshooting Index

Checking the DTCs by HDS

DTC	Detection Item or Symptom	ECU	DTC type	page
B1202	Climate control unit internal error	Climate control unit	Internal error	(see page 21-49)
B1225	An open in the in-car temperature sensor circuit	Climate control unit	Signal error	(see page 21-24)
B1226	A short in the in-car temperature sensor circuit	Climate control unit	Signal error	(see page 21-25)
B1227	An open in the outside air temperature sensor circuit	Climate control unit	Signal error	(see page 21-26)
B1228	A short in the outside air temperature sensor circuit	Climate control unit	Signal error	(see page 21-27)
B1229	An open in the sunlight sensor circuit	Climate control unit	Signal error	(see page 21-28)
B1230	A short in the sunlight sensor circuit	Climate control unit	Signal error	(see page 21-30)
B1231	An open in the evaporator temperature sensor circuit	Climate control unit	Signal error	(see page 21-31)
B1232	A short in the evaporator temperature sensor circuit	Climate control unit	Signal error	(see page 21-32)
B1233	An Open in the driver's air mix control motor circuit	Climate control unit	Signal error	(see page 21-33)
B1234	A short in the driver's air mix control motor circuit	Climate control unit	Signal error	(see page 21-34)
B1235	A problem in the driver's air mix control linkage, door, or motor	Climate control unit	Signal error	(see page 21-36)
B1236	An open in the passenger's air mix control motor circuit	Climate control unit	Signal error	(see page 21-36)
B1237	A short in the passenger's air mix control motor circuit	Climate control unit	Signal error	(see page 21-37)
B1238	A problem in the passenger's air mix control linkage, door, or motor	Climate control unit	Signal error	(see page 21-39)
B1239	An open or short in the driver's mode control motor circuit	Climate control unit	Signal error	(see page 21-39)
B1240	A problem in the driver's mode control linkage, doors, or motor	Climate control unit	Signal error	(see page 21-41)
B1241	A problem in the blower motor circuit	Climate control unit	Signal error	(see page 21-44)
B1242	An open or short in the passenger's mode control motor circuit	Climate control unit	Signal error	(see page 21-42)
B1243	A problem in the passenger's mode control linkage, doors, or motor	Climate control unit	Signal error	(see page 21-44)
B1726	Display panel control unit lost communication with the climate control unit	Display panel control unit Climate control unit	Loss of communication	(see page 21-48)

Protected by A R

Symptom Troubleshooting Index

Symptom	Diagnostic procedure	Also check for
Recirculation control doors do not change between Fresh and Recirculate	Recirculation control motor circuit troubleshooting (see page 21-49)	• HVAC DTCs (see page 21-8) • Blown fuse No. 30 (7.5A) in the under-dash fuse/relay box • Cleanliness and tightness of all connectors
Blower, heater controls, and A/C do not work	Climate control power and ground circuit troubleshooting (see page 21-51)	• HVAC DTCs (see page 21-8) • Blown fuse No. 30 (7.5A) in the under-dash fuse/relay box • Poor ground at G503 • Cleanliness and tightness of all connectors
Both fans do not run at low speed with the A/C on (but the compressor runs with the A/C on)	Radiator and condenser fan low speed circuit troubleshooting (see page 21-52)	• HVAC DTCs (see page 21-8) • Blown fuse No. 9 (30A) in the under-hood fuse/relay box, and No. 30 (7.5 A) in the under-dash fuse/relay box • Poor ground at G301 • Cleanliness and tightness of all connectors
Condenser fan does not run at high speed (but both fans run at low speed and the compressor operates with the A/C on)	Condenser fan high speed circuit troubleshooting (see page 21-56)	• HVAC DTCs (see page 21-8) • Blown fuse No. 30 (7.5A) in the under-dash fuse/relay box • Poor ground at G201 • Cleanliness and tightness of all connectors
Both fans do not run at high speed with the A/C on (but both fans run at low speed and the compressor operates with the A/C on)	Radiator and condenser fan high speed circuit troubleshooting (see page 21-58)	• HVAC DTCs (see page 21-8) • Cleanliness and tightness of all connectors
Compressor clutch does not engage (but both fans run with the A/C on)	Compressor clutch circuit troubleshooting (see page 21-59)	• HVAC DTCs (see page 21-8) • Blown fuse No. 12 (7.5A) in the under-hood fuse/relay box, and No. 30 (7.5A) in the under-dash fuse/ relay box • Cleanliness and tightness of all connectors
A/C System does not come on (both fans and compressor do not work); heater is OK	A/C Pressure switch circuit troubleshooting (see page 21-61)	• Body DTCs in B-CAN System Diagnosis Test Mode A Troubleshooting (see page 22-108) • HVAC DTCs (see page 21-8) • Cleanliness and tightness of all connectors
Blower fan runs slower than expected in cold weather	ECT Troubleshooting (see page 11-66) NOTE: It is normal for the blower to run slowly until the engine coolant temperature begins to rise. If the blower continues to run slowly for an abnormal length of time, continue to troubleshoot the problem.	• Power train DTCs (see page 11-3)
Both fans run at high speed all the time with the A/C on	Radiator and condenser fan high speed circuit troubleshooting (see page 21-58)	• HVAC DTCs (see page 21-8) • Cleanliness and tightness of all connectors

Protected by

System Description

The air conditioning system removes heat from the passenger compartment by circulating refrigerant through the system.

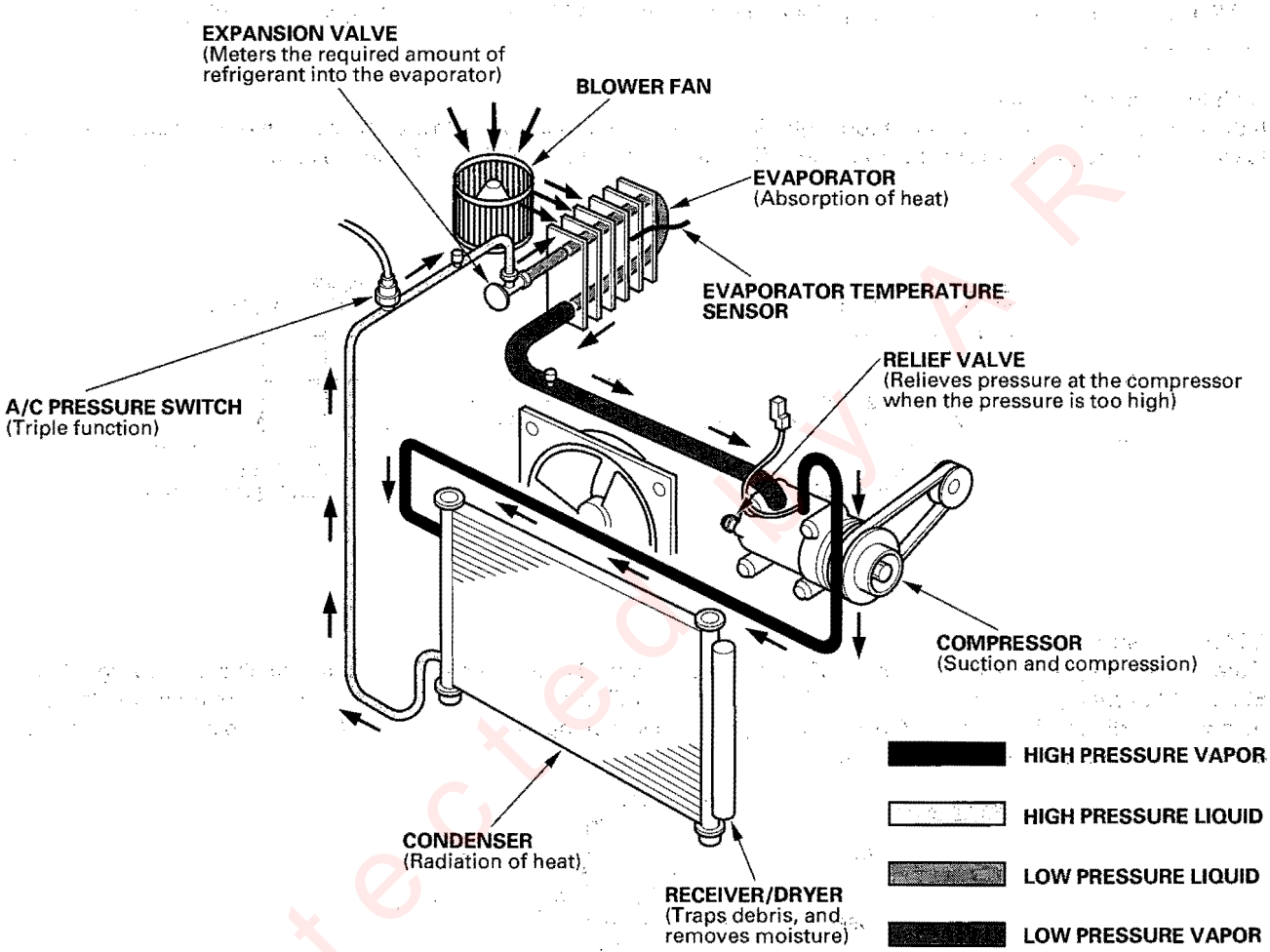

This vehicle uses HFC-134a (R-134a) refrigerant which does not contain chlorofluorocarbons. Pay attention to the following service items:

- Do not mix refrigerants CFC-12 (R-12) and HFC-134a (R-134a). They are not compatible.
- Use only the recommended polyalkyleneglycol (PAG) refrigerant oil (DENSO ND-OIL 8) designed for the R-134a compressor. Intermixing the recommended (PAG) refrigerant oil with any other refrigerant oil will result in compressor failure.
- All A/C system parts (compressor, discharge line, suction line, evaporator, condenser, receiver/dryer, expansion valve, O-rings for joints) are designed for refrigerant R-134a. Do not exchange with R-12 parts.
- Use a halogen gas leak detector designed for refrigerant R-134a.
- R-12 and R-134a refrigerant servicing equipment are not interchangeable. Use only a recovery/recycling/charging station that is U.L.-listed and is certified to meet the requirements of SAE J2210 to service R-134a air conditioning system.
- Always recover the refrigerant R-134a with an approved recovery/recycling/charging station before disconnecting any A/C fitting.

(cont'd)

System Description (cont'd)

A/C Pressure Switch

The A/C pressure switch consists of a high-low pressure switch (A/C pressure switch A) and a middle pressure switch (A/C pressure switch B).

- High-low pressure switch
  If the refrigerant pressure becomes too high (due to blockage or lack of airflow at the condenser), or too low (due to leakage), the A/C pressure switch stops the A/C request signal to the ECM/PCM and the compressor stops operating.

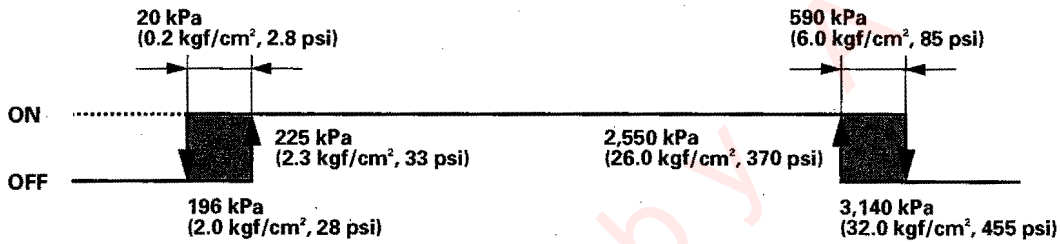

- Middle pressure switch
  If the refrigerant pressure goes above 1,470 kPa (15.0 kgf/cm², 213 psi), the A/C pressure switch closes to signal the ECM/PCM to change the speed of the condenser fan and radiator fan to high when the refrigerant pressure drops below 1,075 kPa (10.1 kgf/cm², 156 psi), the A/C pressure switch opens to signal the ECM/PCM to change the speed of the condenser fan and radiator fan to low.

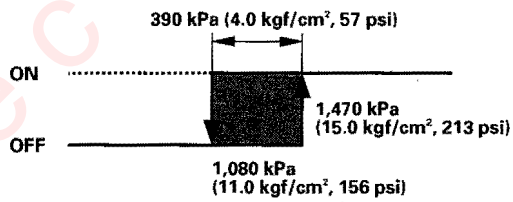

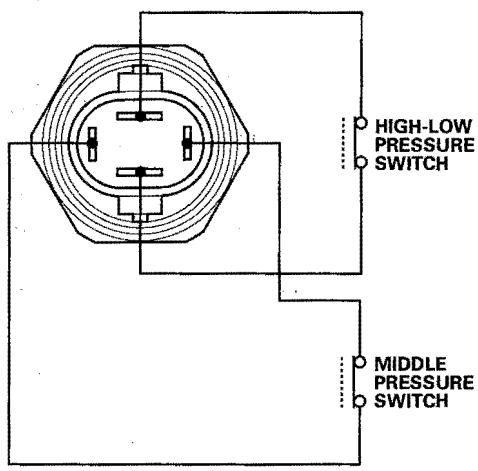

Protected by

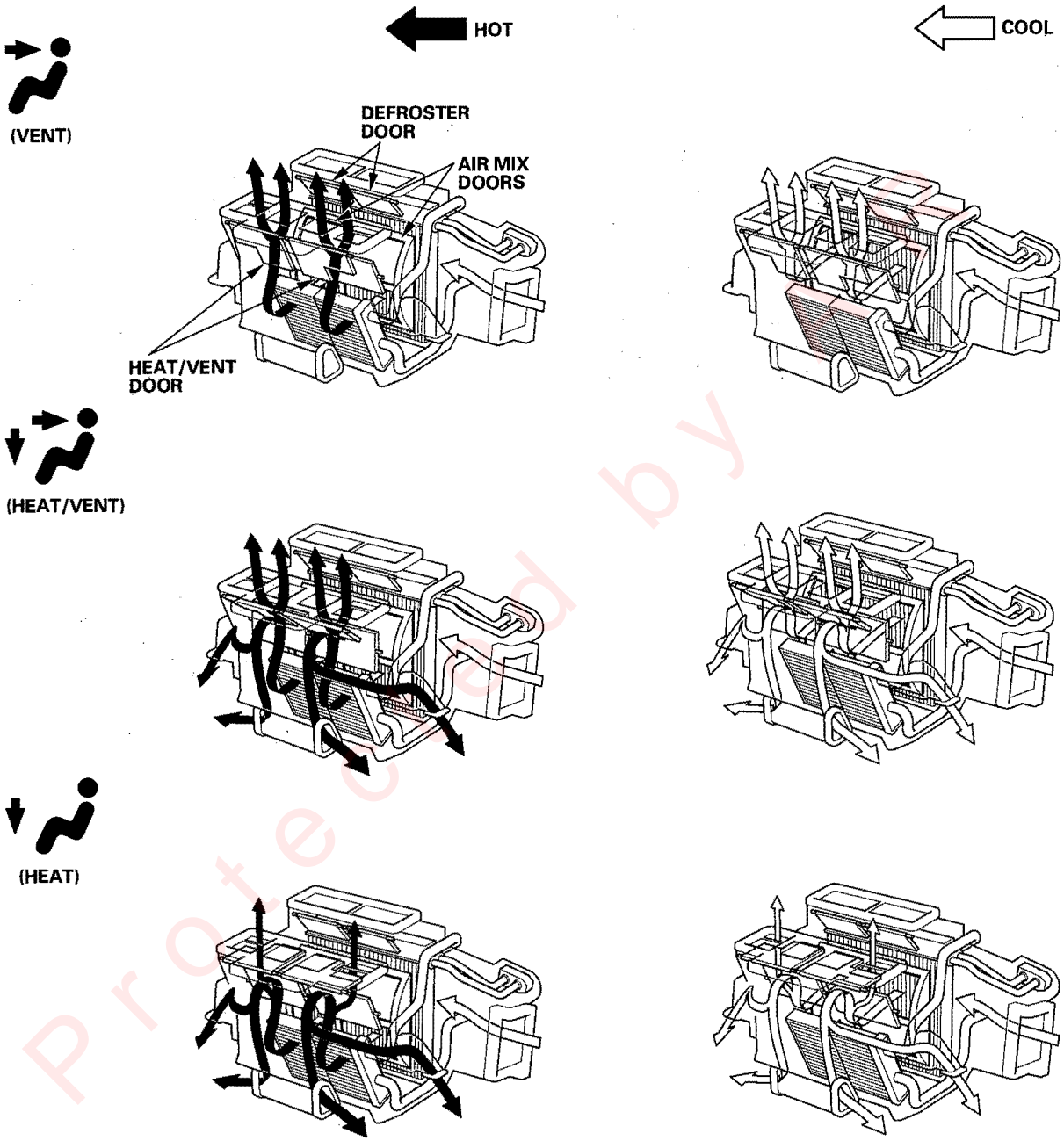

Protected by

(cont'd)

System Description (cont'd)

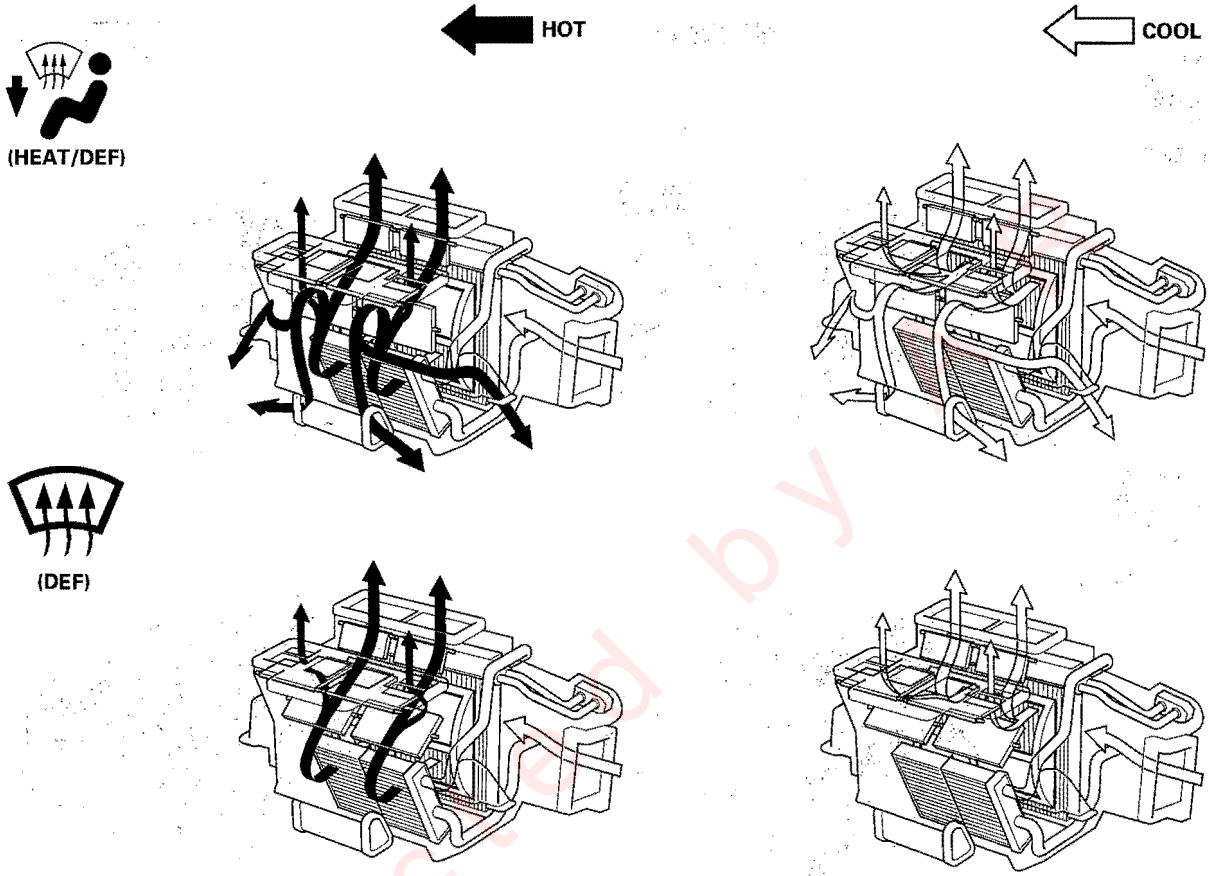

Protected by

Dual Air Mix Control System

Driver's side: HOT
Passenger's side: COOL

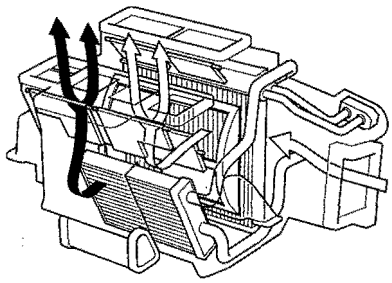

Driver's side: COOL
Passenger's side: HOT

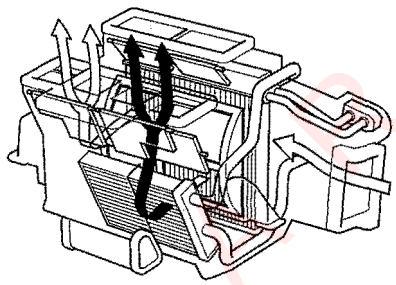

Dual Mode Control System

All modes (except defroster) can be controlled independently.

Driver's side: VENT
Passenger's side: HEAT

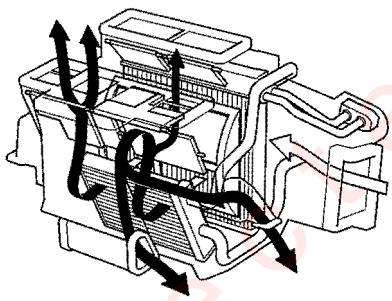

Driver's side: HEAT
Passenger's side: VENT

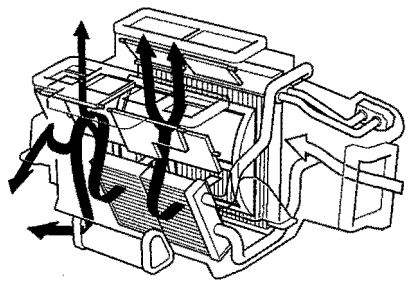

Protected by ...

(cont'd)

System Description (cont'd)

i-Dual Climate Control System (With navigation system)

This system automatically controls the temperature and the vent mode of the air direction to the driver and passenger's side depending on the angle of the sun, and the direction of the vehicle. It calculates information such as date, time, longitude, and latitude from the navigation system, as well as the irradiate strength of the sun from the sunlight sensor, to determine the appropriate mode position and temperature to be directed to each side.

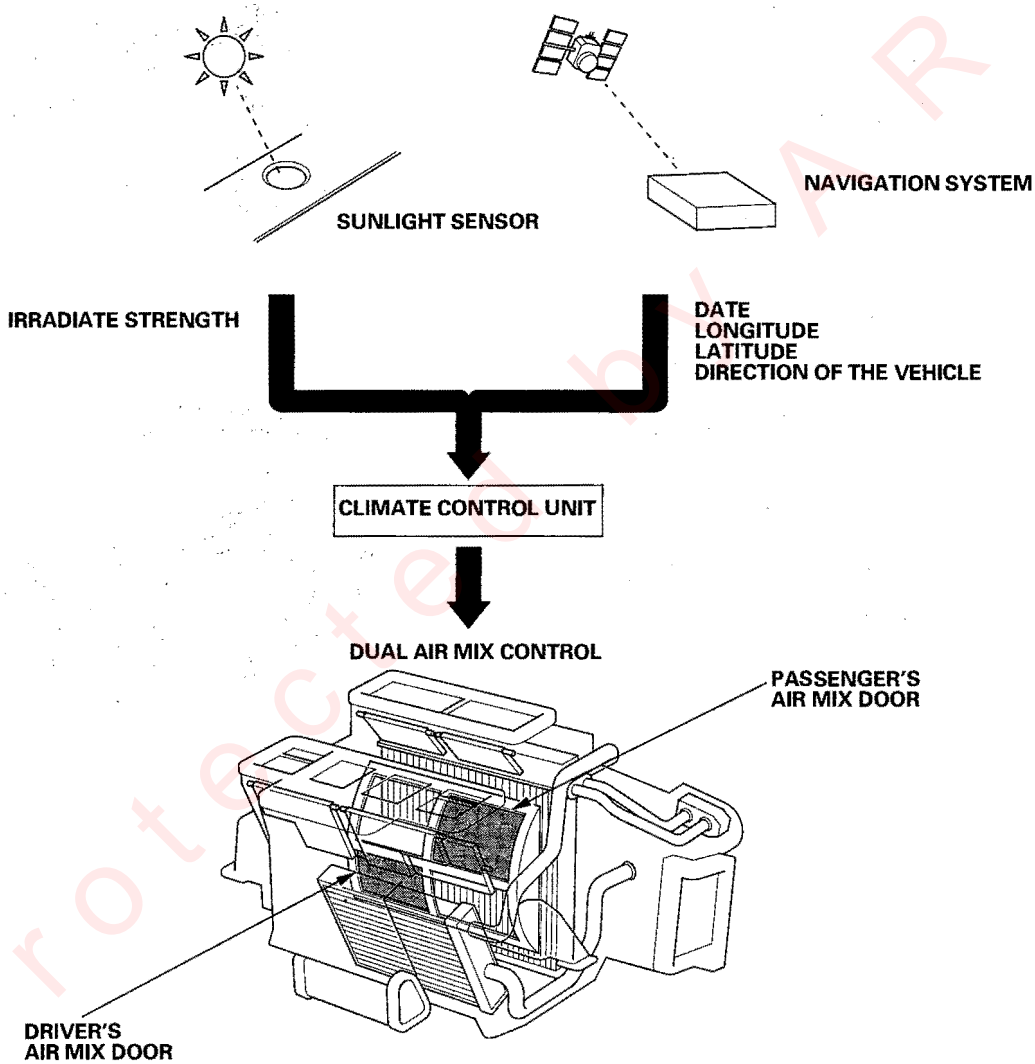

In the event that the navigation system malfunctions, or when driving in areas where the navigation cannot determine the vehicle position (non-coverage areas, tunnels, etc.), the climate control system will operate the same as a vehicle without navigation.

Protected by AR

Climate Control Unit Inputs and Outputs

CLIMATE CONTROL UNIT CONNECTORS

CONNECTOR A (20P)

1	2	3	4	5	6	7	8	9	10
11	12	13	14	15	16	17	18	19	20

CONNECTOR B (16P)

1	2	3	4	5	6	7	8
9	10	11	12	13	14	15	16

Wire side of female terminals

CONNECTOR A

Cavity	Wire color	Signal	
1	BLK/YEL	IG2 (Power)	INPUT
2	YEL/BLK	CPM RX	INPUT
3	BLK	GROUND (G503) (Canada)	INPUT
4	WHT/BLU	CPM GROUND	INPUT
5	RED/BLK	SENSOR COMMON GROUND	INPUT
6	BLK	GROUND (G503)	INPUT
7	BLU/RED	BLOWER FEEDBACK	INPUT
8	BLU/YEL	POWER TRANSISTOR CONTROL	OUTPUT
9	GRN/YEL	RECIRCULATE	INPUT
10	PNK/BLK	DRIVER'S AIR MIX POTENTIAL	OUTPUT
11	WHT/BLK	CPM IG2	INPUT
12	BRN	CPM TX	OUTPUT
13	WHT/RED	FR DEF	OUTPUT
14	YEL	A/C PRESSURE SWITCH	INPUT
15	LT BLU	IN-CAR TEMPERATURE SENSOR	OUTPUT
16	PNK	OUTSIDE AIR TEMPERATURE SENSOR	OUTPUT
17	ORN	SUNLIGHT SENSOR	OUTPUT
18	BRN	EVAPORATOR TEMPERATURE SENSOR	OUTPUT
19	GRN/WHT	FRESH	INPUT
20	GRY	AIR MIX POTENTIAL +5 V	OUTPUT

CONNECTOR B

Cavity	Wire color	Signal	
1	YEL/RED	DRIVER'S MODE VENT	OUTPUT
2	BLU/BLK	DRIVER'S MODE DEF	OUTPUT
3	PNK/BLU	DRIVER'S AIR MIX HOT	OUTPUT
4	GRN	DRIVER'S AIR MIX COOL	OUTPUT
5	BLU/RED	PASSENGER'S MODE VENT	OUTPUT
6	BLU/WHT	PASSENGER'S MODE DEF	OUTPUT
7	YEL/BLU	PASSENGER'S AIR MIX HOT	OUTPUT
8	YEL/BLK	PASSENGER'S AIR MIX COOL	OUTPUT
9	WHT/BLU	DRIVER'S MODE 4	OUTPUT
10	YEL/GRN	DRIVER'S MODE 3	OUTPUT
11	RED/YEL	DRIVER'S MODE 1	OUTPUT
12	RED/BLU	DRIVER'S MODE 2	OUTPUT
13	WHT	PASSENGER'S MODE 3, 4	OUTPUT
14	WHT/BLK	PASSENGER'S MODE 2	OUTPUT
15	WHT/RED	PASSENGER'S MODE 1	OUTPUT
16	YEL	PASSENGER'S AIR MIX POTENTIAL	OUTPUT

Protected by A

Circuit Diagram

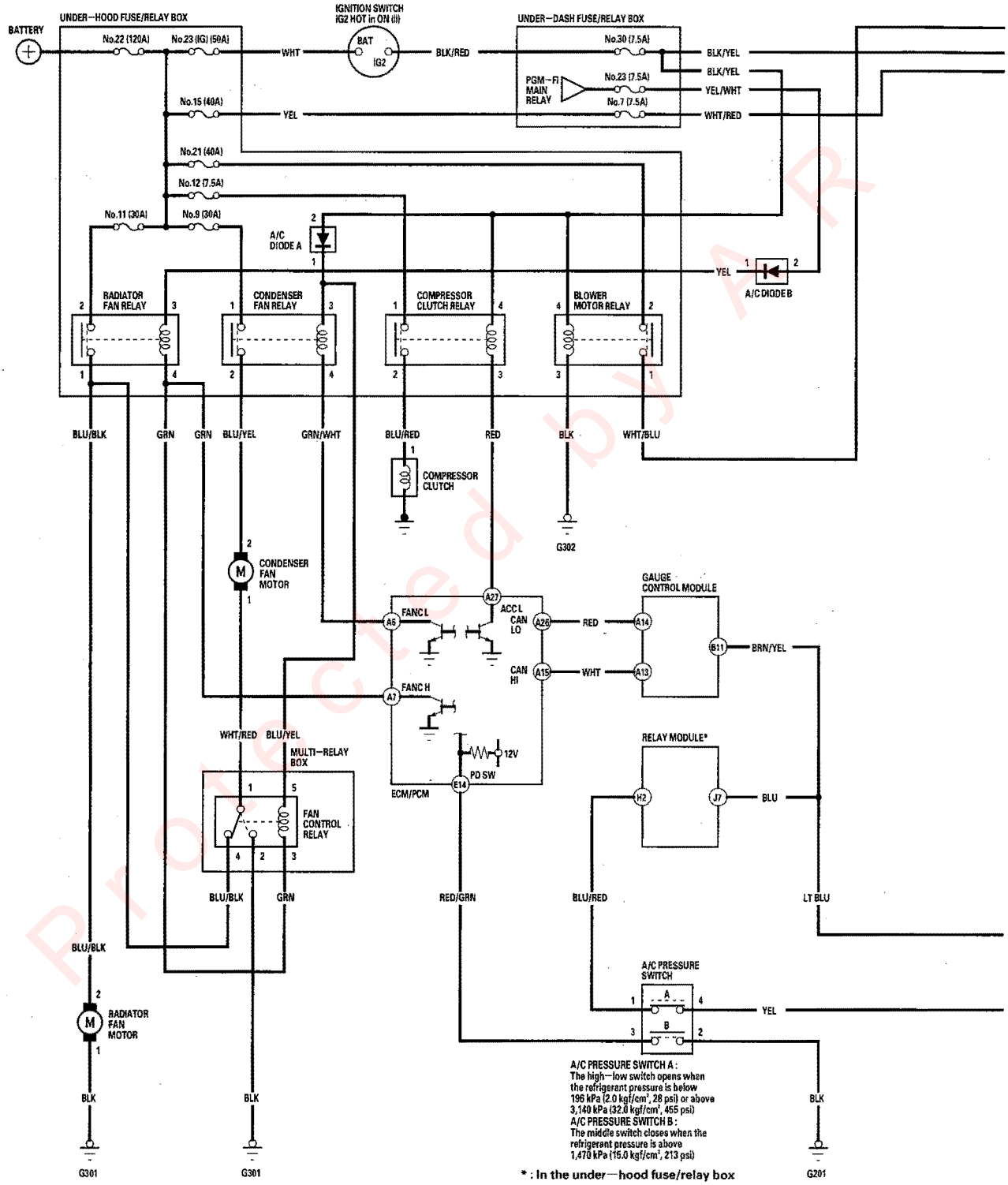

Protected by AR

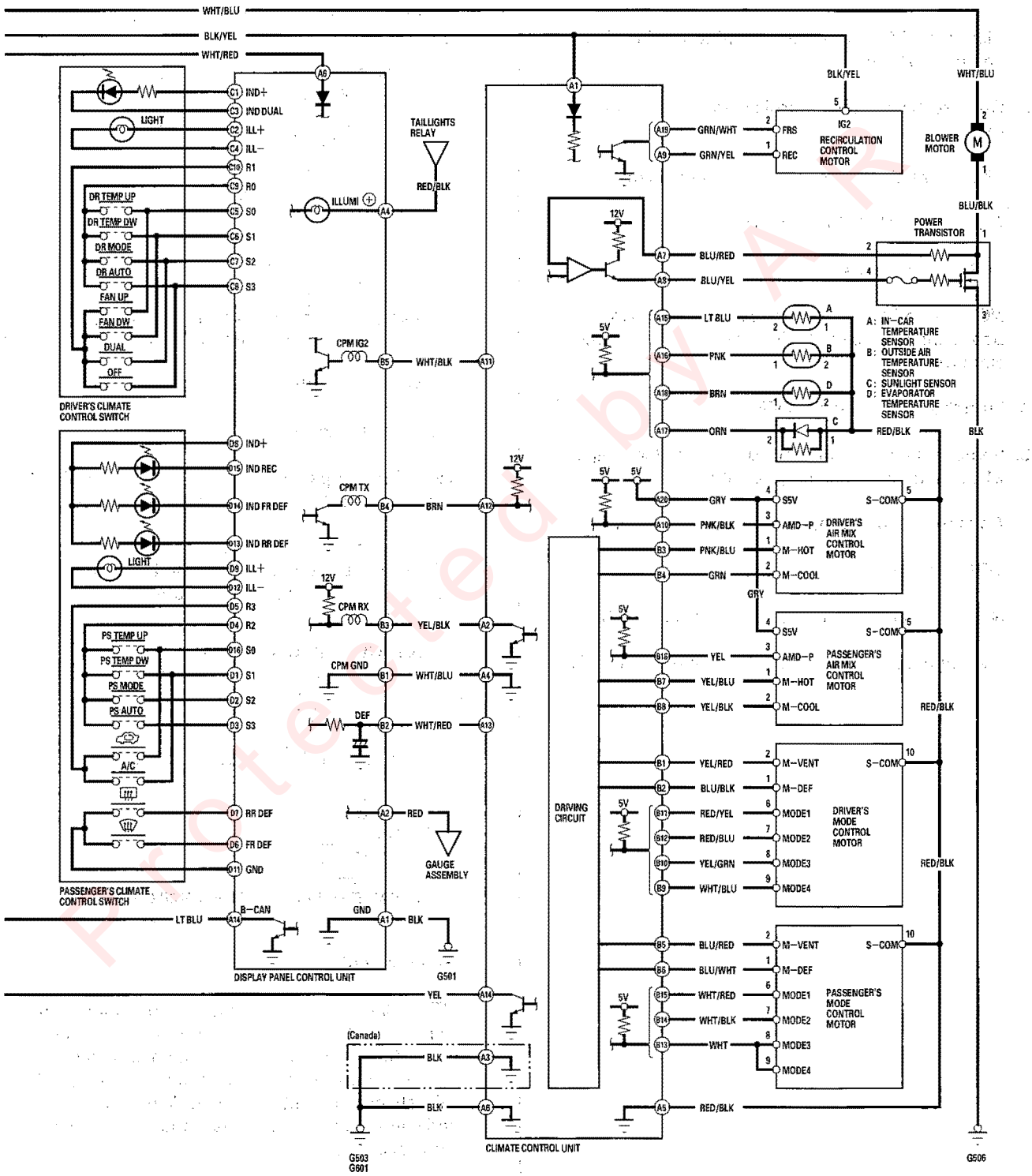

Protected by A R

DTC Troubleshooting

DTC indicator A or DTC B1225: An Open in the In-car Temperature Sensor Circuit

1. Clear the DTC by turning the ignition switch OFF, and then ON (II).
2. Operate the climate control system in several modes.
3. Check for DTCs using the self-diagnostic or HDS.

   Is DTC A or B1225 indicated?

   YES—Go to step 4.

   NO—Intermittent failure, check for loose wires or poor connections on the in-car temperature sensor circuit. ■
4. Turn the ignition switch OFF.
5. Remove the in-car temperature sensor (see page 21-63) and test it (see page 21-63).

   Does the in-car temperature sensor test OK?

   YES—Go to step 6.

   NO—Replace the in-car temperature sensor. ■
6. Disconnect climate control unit connector A (20P).
7. Check for continuity between the No. 15 terminal of climate control unit connector A (20P) and the No. 2 terminal of the in-car temperature sensor 2P connector.

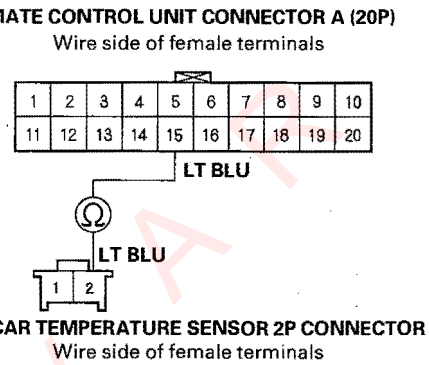

   Is there continuity?

   YES—Go to step 8.

   NO—Repair open in the wire between the climate control unit and the in-car temperature sensor. ■
8. Check for continuity between the No. 5 terminal of climate control unit connector A (20P) and the No. 1 terminal of the in-car temperature sensor 2P connector.

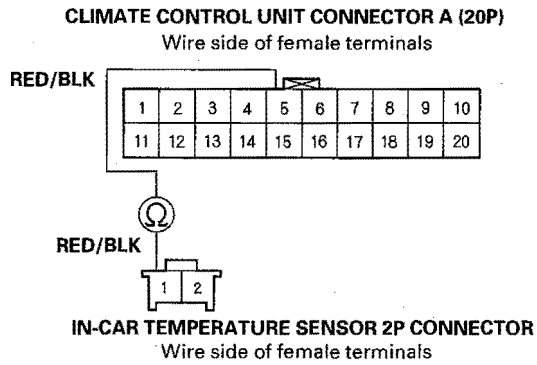

   Is there continuity?

   YES—Check for loose wires or poor connections at climate control unit connector A (20P) and at the in-car temperature sensor 2P connector. If the connections are good, substitute a known-good climate control unit, and recheck. If the symptom/indication goes away, replace the original climate control unit. ■

   NO—Repair open in the wire between the climate control unit and the in-car temperature sensor. ■

Protected by AP

DTC indicator B or DTC B1226: A Short in the In-car Temperature Sensor Circuit

1. Clear the DTC by turning the ignition switch OFF, and then ON (II).
2. Operate the climate control system in several modes.
3. Check for DTCs using the self-diagnostic or HDS.

   Is DTC B or B1226 indicated?

   YES—Go to step 4.

   NO—Intermittent failure. ■
4. Turn the ignition switch OFF.
5. Remove the in-car temperature sensor (see page 21-63) and test it (see page 21-63).

   Does the in-car temperature sensor test OK?

   YES—Go to step 6.

   NO—Replace the in-car temperature sensor. ■
6. Disconnect climate control unit connector A (20P).
7. Check for continuity between the No. 15 terminal of climate control unit connector A (20P) and body ground.

CLIMATE CONTROL UNIT CONNECTOR A (20P)

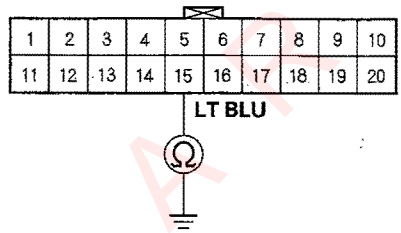

Wire side of female terminals

Is there continuity?

YES—Go to step 8.

NO—Substitute a known-good climate control unit, and recheck. If the symptom/indication goes away, replace the original climate control unit. ■

8. Check for continuity between the No. 15 terminal and the No. 5 terminal of climate control unit connector A (20P).

CLIMATE CONTROL UNIT CONNECTOR A (20P)

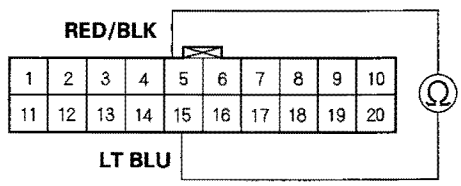

Wire side of female terminals

Is there continuity?

YES—Repair short in the wires between the climate control unit and the in-car temperature sensor. ■

NO—Repair short to body ground in the wire between the climate control unit and the in-car temperature sensor. ■

Protected by AIM

DTC Troubleshooting (cont'd)

DTC indicator C or DTC B1227: An Open in the Outside Air Temperature Sensor Circuit

1. Clear the DTC by turning the ignition switch OFF, and then ON (II).
2. Operate the climate control system in several modes.
3. Check for DTCs using the self-diagnostic or HDS.

   Is DTC C or B1227 indicated?

   YES—Go to step 4.

   NO—Intermittent failure, check for loose wires or poor connections on the outside air temperature sensor circuit. ■
4. Turn the ignition switch OFF.
5. Remove the outside air temperature sensor (see page 21-64) and test it (see page 21-64).

   Does the outside air temperature sensor test OK?

   YES—Go to step 6.

   NO—Replace the outside air temperature sensor. ■
6. Disconnect climate control unit connector A (20P).
7. Check for continuity between the No. 16 terminal of climate control unit connector A (20P) and the No. 1 terminal of the outside air temperature sensor 2P connector.

CLIMATE CONTROL UNIT CONNECTOR A (20P)
Wire side of female terminals

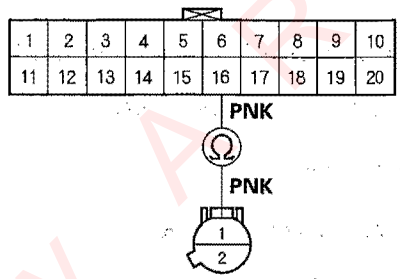

OUTSIDE AIR TEMPERATURE SENSOR 2P CONNECTOR
Wire side of female terminals

Is there continuity?

YES—Go to step 8.

NO—Repair open in the wire between the climate control unit and the outside air temperature sensor. ■

Protected by AP

8. Check for continuity between the No. 5 terminal of climate control unit connector A (20P) and the No. 2 terminal of the outside air temperature sensor 2P connector.

CLIMATE CONTROL UNIT CONNECTOR A (20P)
Wire side of female terminals

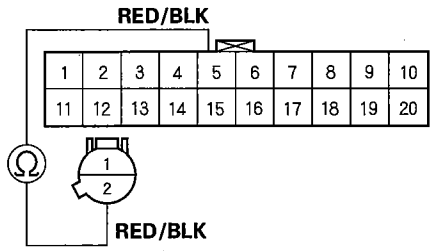

OUTSIDE AIR TEMPERATURE SENSOR 2P CONNECTOR
Wire side of female terminals

Is there continuity?

YES—Check for loose wires or poor connections at climate control unit connector A (20P) and at the outside air temperature sensor 2P connector. If the connections are good, substitute a known-good climate control unit, and recheck. If the symptom/indication goes away, replace the original climate control unit. ■

NO—Repair open in the wire between the climate control unit and the outside air temperature sensor. ■

DTC indicator D or DTC B1228: A Short in the Outside Air Temperature Sensor Circuit

1. Clear the DTC by turning the ignition switch OFF, and then ON (II).
2. Operate the climate control system in several modes.
3. Check for DTCs using the self-diagnostic or HDS.

   Is DTC D or B1228 indicated?

   YES—Go to step 4.

   NO—Intermittent failure. ■
4. Turn the ignition switch OFF.
5. Remove the outside air temperature sensor (see page 21-64) and test it (see page 21-64).

   Does the outside air temperature sensor test OK?

   YES—Go to step 6.

   NO—Replace the outside air temperature sensor. ■
6. Disconnect climate control unit connector A (20P).

(cont'd)

Protected by AR

DTC Troubleshooting (cont'd)

7. Check for continuity between the No. 16 terminal of climate control unit connector A (20P) and body ground.

CLIMATE CONTROL UNIT CONNECTOR A (20P)

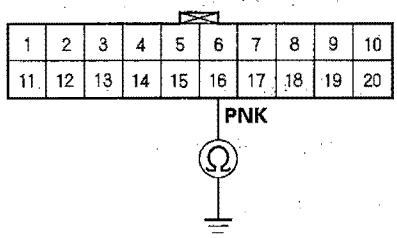

Wire side of female terminals

Is there continuity?

YES—Go to step 8.

NO—Substitute a known-good climate control unit, and recheck. If the symptom/indication goes away, replace the original climate control unit.■

8. Check for continuity between the No. 16 terminal and the No. 5 terminal of climate control unit connector A (20P).

CLIMATE CONTROL UNIT CONNECTOR A (20P)

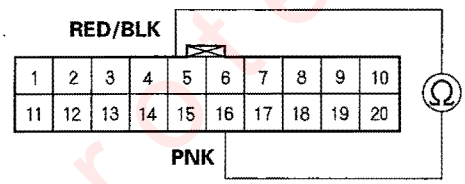

Wire side of female terminals

Is there continuity?

YES—Repair short in the wires between the climate control unit and the outside air temperature sensor. ■

NO—Repair short to body ground in the wire between the climate control unit and the outside air temperature sensor.■

DTC indicator E or DTC B1229: An Open in the Sunlight Sensor Circuit

1. Clear the DTC by turning the ignition switch OFF, and then ON (II).
2. Operate the climate control system in several modes.
3. Check for DTCs using the self-diagnostic or HDS.

   Is DTC E or B1229 indicated?

   YES—Go to step 4.

   NO—Intermittent failure, check for loose wires or poor connections on the sunlight sensor circuit.■
4. Turn the ignition switch OFF.
5. Test the sunlight sensor (see page 21-65).

   Is the sunlight sensor OK?

   YES—Go to step 6.

   NO—Replace the sunlight sensor.■
6. Disconnect the sunlight sensor 2P connector.
7. Disconnect climate control unit connector A (20P).

Protected by AR

8. Check for continuity between the No. 17 terminal of climate control unit connector A (20P) and the No. 2 terminal of the sunlight sensor 2P connector.

CLIMATE CONTROL UNIT CONNECTOR A (20P)
Wire side of female terminals

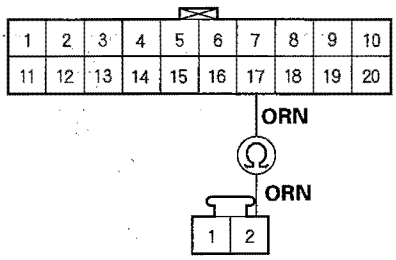

SUNLIGHT SENSOR 2P CONNECTOR
Wire side of female terminals

Is there continuity?

YES—Go to step 9.

NO—Repair open in the wire between the climate control unit and the sunlight sensor.■

9. Check for continuity between the No. 5 terminal of climate control unit connector A (20P) and the No. 1 terminal of the sunlight sensor 2P connector.

CLIMATE CONTROL UNIT CONNECTOR A (20P)
Wire side of female terminals

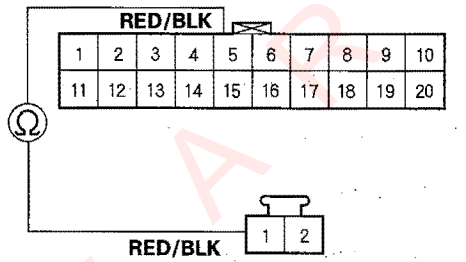

SUNLIGHT SENSOR 2P CONNECTOR
Wire side of female terminals

Is there continuity?

YES—Check for loose wires or poor connections at climate control unit connector A (20P) and at the sunlight sensor 2P connector. If the connections are good, substitute a known-good climate control unit, and recheck. If the symptom/indication goes away, replace the original climate control unit.■

NO—Repair open in the wire between the climate control unit and the sunlight sensor.■

Protected by A

DTC Troubleshooting (cont'd)

DTC indicator F or DTC B1230: A Short in the Sunlight Sensor Circuit

1. Clear the DTC by turning the ignition switch OFF, and then ON (II).
2. Operate the climate control system in several modes.
3. Check for DTCs using the self-diagnostic or HDS.

   Is DTC F or B1230 indicated?

   YES—Go to step 4.

   NO—Intermittent failure. ■
4. Turn the ignition switch OFF.
5. Test the sunlight sensor (see page 21-65).

   Is the sunlight sensor OK?

   YES—Go to step 6.

   NO—Replace the sunlight sensor. ■
6. Disconnect the sunlight sensor 2P connector.
7. Disconnect climate control unit connector A (20P).
8. Check for continuity between the No. 17 terminal of climate control unit connector A (20P) and body ground.

CLIMATE CONTROL UNIT CONNECTOR A (20P)

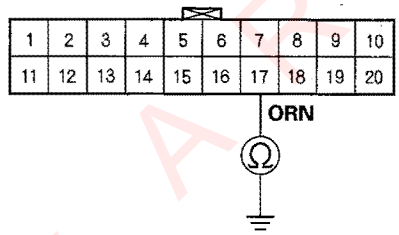

Wire side of female terminals

Is there continuity?

YES—Repair short to body ground in the wire between the climate control unit and the sunlight sensor. ■

NO—Go to step 9.

9. Check for continuity between the No. 17 terminal and the No. 5 terminal of climate control unit connector A (20P).

CLIMATE CONTROL UNIT CONNECTOR A (20P)

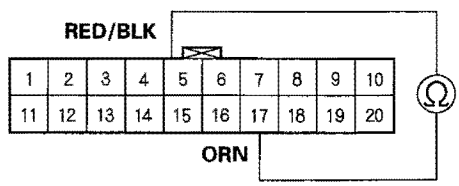

Wire side of female terminals

Is there continuity?

YES—Repair short in the wires between the climate control unit and the sunlight sensor. ■

NO—Substitute a known-good climate control unit, and recheck. If the symptom/indication goes away, replace the original climate control unit. ■

Protected by AP

DTC indicator G or DTC B1231: An Open in the Evaporator Temperature Sensor Circuit

1. Clear the DTC by turning the ignition switch OFF, and then ON (II).
2. Operate the climate control system in several modes.
3. Check for DTCs using the self-diagnostic or HDS.

   Is DTC G or B1231 indicated?

   YES—Go to step 4.

   NO—Intermittent failure, check for loose wires or poor connections on the evaporator temperature sensor circuit. ■
4. Turn the ignition switch OFF.
5. Remove the evaporator temperature sensor (see page 21-66) and test it (see page 21-66).

   Does the evaporator temperature sensor test OK?

   YES—Go to step 6.

   NO—Replace the evaporator temperature sensor. ■
6. Disconnect climate control unit connector A (20P).
7. Check for continuity between the No. 18 terminal of climate control unit connector A (20P) and the No. 1 terminal of the evaporator temperature sensor 2P connector.

CLIMATE CONTROL UNIT CONNECTOR A (20P)
Wire side of female terminals

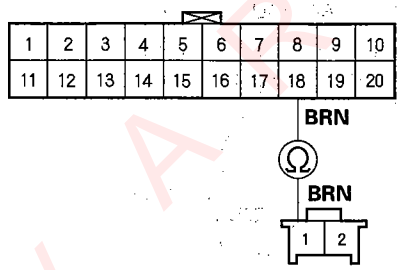

EVAPORATOR TEMPERATURE SENSOR 2P CONNECTOR
Wire side of female terminals

Is there continuity?

YES—Go to step 8.

NO—Repair open in the wire between the climate control unit and the evaporator temperature sensor. ■

(cont'd)

Protected by A

DTC Troubleshooting (cont'd)

8. Check for continuity between the No. 5 terminal of climate control unit connector A (20P) and the No. 2 terminal of the evaporator temperature sensor 2P connector.

CLIMATE CONTROL UNIT CONNECTOR A (20P)
Wire side of female terminals

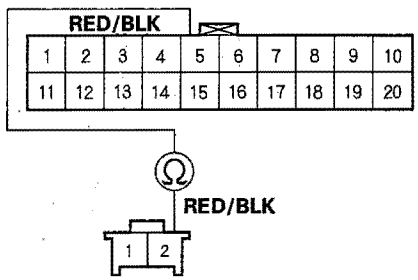

EVAPORATOR TEMPERATURE SENSOR 2P CONNECTOR
Wire side of female terminals

Is there continuity?

YES—Check for loose wire or poor connections at climate control unit connector A (20P) and at the evaporator temperature sensor 2P connector. If the connections are good, substitute a known-good climate control unit, and recheck. If the symptom/indication goes away, replace the original climate control unit.■

NO—Repair open in the wire between the climate control unit and the evaporator temperature sensor.■

DTC indicator H or DTC B1232: A Short in the Evaporator Temperature Sensor Circuit

1. Clear the DTC by turning the ignition switch OFF, and then ON (II).
2. Operate the climate control system in several modes.
3. Check for DTCs using the self-diagnostic or HDS.

   Is DTC H or B1232 indicated?

   YES—Go to step 4.

   NO—Intermittent failure.■
4. Turn the ignition switch OFF.
5. Remove the evaporator temperature sensor (see page 21-66) and test it (see page 21-66).

   Does the evaporator temperature sensor test OK?

   YES—Go to step 6.

   NO—Replace the evaporator temperature sensor.■
6. Disconnect climate control unit connector A (20P).

Protected by AR

7. Check for continuity between the No. 18 terminal of climate control unit connector A (20P) and body ground.

CLIMATE CONTROL UNIT CONNECTOR A (20P)

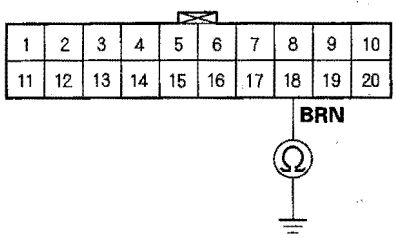

Wire side of female terminals

Is there continuity?

YES—Repair short to body ground in the wire between the climate control unit and the evaporator temperature sensor. ■

NO—Go to step 8.

8. Check for continuity between the No. 18 terminal and the No. 5 terminal of climate control connector A (20P).

CLIMATE CONTROL UNIT CONNECTOR A (20P)

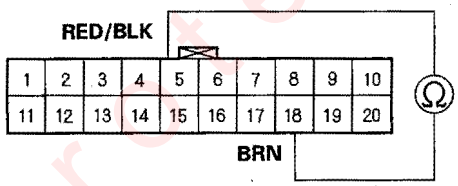

Wire side of female terminals

Is there continuity?

YES—Repair short to in the wires between the climate control unit and the evaporator temperature sensor. ■

NO—Substitute a known-good climate control unit, and recheck. If the symptom/indication goes away, replace the original climate control unit. ■

DTC indicator I or DTC B1233: An Open in the Driver's Air Mix Control Motor Circuit

1. Clear the DTC by turning the ignition switch OFF, and then ON (II).
2. Operate the climate control system in several modes.
3. Check for DTCs using the self-diagnostic or HDS.

   Is DTC I or B1233 indicated?

   YES—Go to step 4.

   NO—Intermittent failure, check for loose wires or poor connections on the driver's air mix control motor circuit. ■
4. Turn the ignition switch OFF.
5. Test the driver's air mix control motor (see page 21-68).

   Is the driver's air mix control motor OK?

   YES—Go to step 6.

   NO—Replace the driver's air mix control motor. ■
6. Disconnect the driver's air mix control motor 5P connector.
7. Disconnect climate control unit connector A (20P) and B (16P).

(cont'd)

Protected by AR

DTC Troubleshooting (cont'd)

8. Check for continuity between following terminals of climate control unit connector A (20P) and B (16P) and the driver's air mix control motor 5P connector.

20P:	5P:
No. 5	No. 5
No. 10	No. 3
No. 20	No. 4
16P:	5P:
No. 3	No. 1
No. 4	No. 2

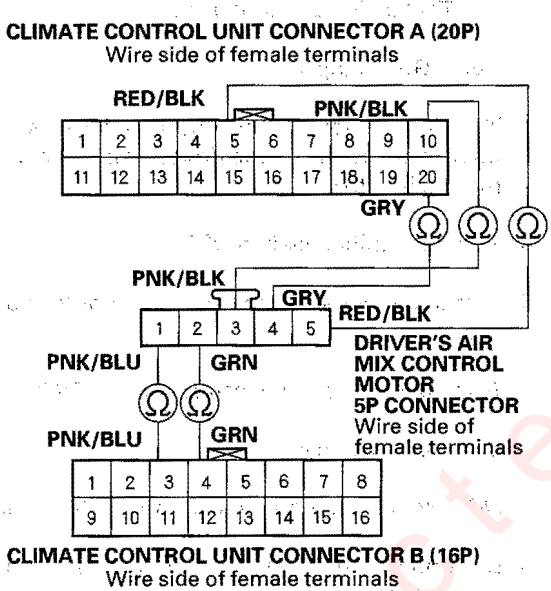

Is there continuity?

YES—Check for loose wire or poor connections at climate control unit connector A (20P) and B (16P) and at the driver's air mix control motor 5P connector. If the connections are good, substitute a known-good climate control unit and recheck. If the symptom/indication goes away, replace the original climate control unit.■

NO—Repair any open in the wire(s) between the climate control unit and the driver's air mix control motor.■

DTC indicator J or DTC B1234: A Short in the Driver's Air Mix Control Motor Circuit

1. Clear the DTC by turning the ignition switch OFF, and then ON (II).
2. Operate the climate control system in several modes.
3. Check for DTCs using the self-diagnostic or HDS.

   Is DTC J or B1234 indicated?

   YES—Go to step 4.

   NO—Intermittent failure.■
4. Turn the ignition switch OFF.
5. Test the driver's air mix control motor (see page 21-68).

   Is the driver's air mix control motor OK?

   YES—Go to step 6.

   NO—Replace the driver's air mix control motor (see page 21-68).■
6. Disconnect the driver's air mix control motor 5P connector.
7. Disconnect climate control unit connector A (20P) and B (16P).
8. Check for continuity between body ground and climate control unit connector A (20P) terminals No. 5, 10 and 20 individually, and between body ground and climate control unit connector B (16P) terminals No. 3 and 4 individually.

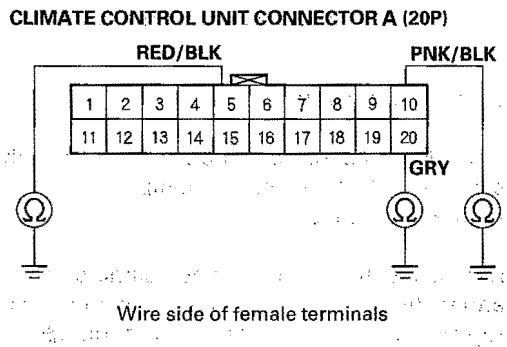

Protected by AR

CLIMATE CONTROL UNIT CONNECTOR B (16P)

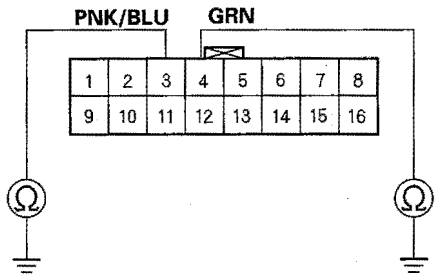

Wire side of female terminals

Is there continuity?

YES—Repair any short to body ground in the wire(s) between the climate control unit and the driver's air mix control motor. ■

NO—Go to step 9.

9. Check for continuity between the terminals of climate control unit connector A (20P) and B (16P) as follows.

Terminal	To terminals
A5	A10, A20, B3, B4
A10	A20, B3, B4
A20	B3, B4
B3	B4

Is there continuity between any of the terminals?

YES—Repair the short in the wires. ■

NO—Go to step 10.

10. Turn the ignition switch ON (II), and check the same terminals for voltage.

CLIMATE CONTROL UNIT CONNECTOR A (20P)

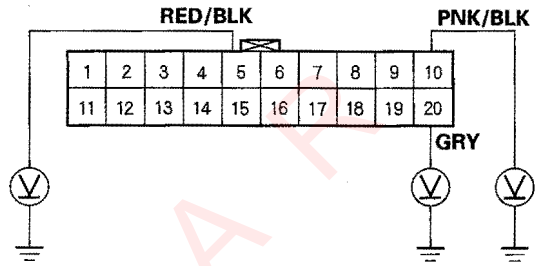

Wire side of female terminals

CLIMATE CONTROL UNIT CONNECTOR B (16P)

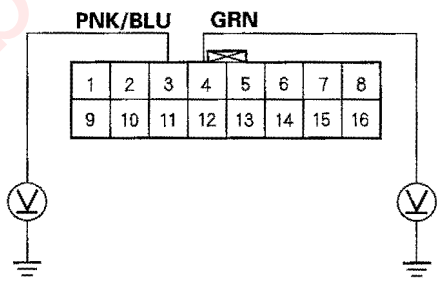

Wire side of female terminals

Is there any voltage?

YES—Repair any short to power in the wire(s) between the climate control unit and the driver's air mix control motor. This short may also damages the climate control unit. Repair the short to power before replacing the climate control unit. ■

NO—Substitute a known-good climate control unit, and recheck. If the symptom/indication goes away, replace the original climate control unit. ■

Protected by A

DTC Troubleshooting (cont'd)

DTC indicator K or DTC B1235: A Problem in the Driver's Air Mix Control Linkage, Door, or Motor

1. Clear the DTC by turning the ignition switch OFF, and then ON (II).
2. Operate the climate control system in several modes.
3. Check for DTCs using the self-diagnostic or HDS.

   Is DTC K or B1235 indicated?

   YES—Go to step 4.

   NO—Intermittent failure. ■
4. Turn the ignition switch OFF.
5. Test the driver's air mix control motor (see page 21-68).

   Is the driver's air mix control motor OK?

   YES—Substitute a known-good climate control unit, and recheck. If the symptom/indication goes away, replace the original climate control unit. ■

   NO—Replace the driver's air mix control motor (see page 21-68), or repair the driver's air mix control linkage or door. ■

DTC indicator L or DTC B1236: An Open in the Passenger's Air Mix Control Motor Circuit

1. Clear the DTC by turning the ignition switch OFF, and then ON (II).
2. Operate the climate control system in several modes.
3. Check for DTCs using the self-diagnostic or HDS.

   Is DTC L or B1236 indicated?

   YES—Go to step 4.

   NO—Intermittent failure, check for loose wires or poor connections on the passenger's air mix control motor circuit. ■
4. Turn the ignition switch OFF.
5. Test the passenger's air mix control motor (see page 21-69).

   Is the passenger's air mix control motor OK?

   YES—Go to step 6.

   NO—Replace the passenger's air mix control motor (see page 21-68). ■
6. Disconnect the passenger's air mix control motor 5P connector.
7. Disconnect climate control unit connector A (20P) and B (16P).

Protected by AR

8. Check for continuity between following terminals of climate control unit connector A (20P) and B (16P) and the passenger's air mix control motor 5P connector.

20P:	5P:
No. 5	No. 5
No. 20	No. 4
16P:	5P:
No. 7	No. 1
No. 8	No. 2
No. 16	No. 3

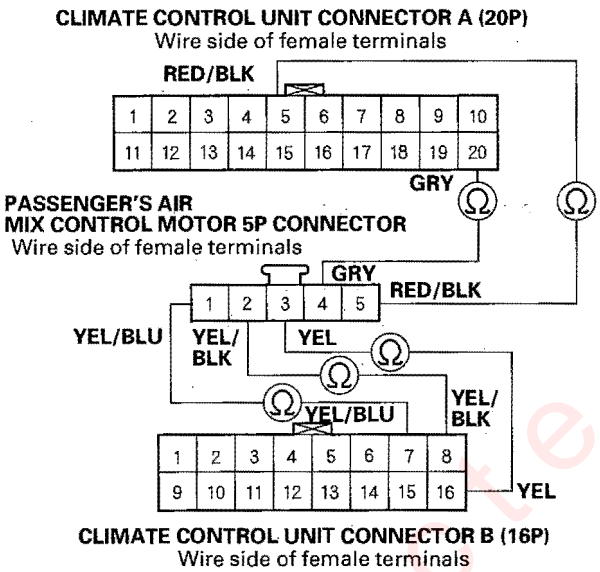

Is there continuity?

YES—Check for loose wire or poor connections at climate control unit connector A (20P) and B (16P) and at the passenger's air mix control motor 5P connector. If the connections are good, substitute a known-good climate control unit, and recheck. If the symptom/indication goes away, replace the original climate control unit.■

NO—Repair any open in the wire(s) between the climate control unit and the passenger's air mix control motor.■

DTC indicator M or DTC B1237: A Short in the Passenger's Air Mix Control Motor Circuit

1. Clear the DTC by turning the ignition switch OFF, and then ON (II).
2. Operate the climate control system in several modes.
3. Check for DTCs using the self-diagnostic or HDS.

   Is DTC M or B1237 indicated?

   YES—Go to step 4.

   NO—Intermittent failure.■
4. Turn the ignition switch OFF.
5. Test the passenger's air mix control motor (see page 21-69).

   Is the passenger's air mix control motor OK?

   YES—Go to step 6.

   NO—Replace the passenger's air mix control motor (see page 21-69).■
6. Disconnect the passenger's air mix control motor 5P connector.
7. Disconnect climate control unit connector A (20P) and B (16P).
8. Check for continuity between body ground and climate control unit connector A (20P) terminals No. 5 and 20 individually, and between body ground and climate control unit connector B (16P) terminals No. 7, 8 and 16 individually.

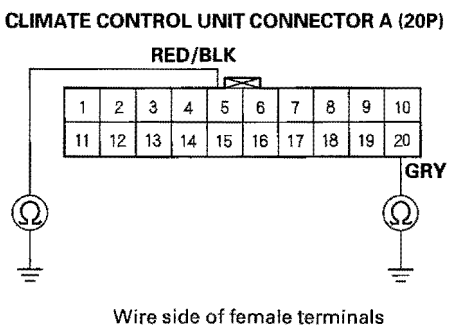

(cont'd)

DTC Troubleshooting (cont'd)

CLIMATE CONTROL UNIT CONNECTOR B (16P)

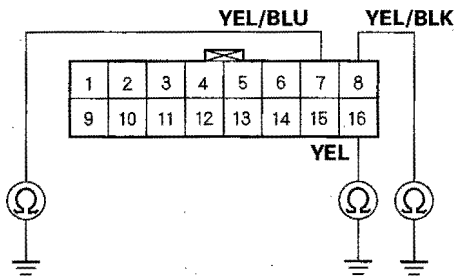

Wire side of female terminals

Is there continuity?

YES—Repair any short to body ground in the wire(s) between the climate control unit and the passenger's air mix control motor. ■

NO—Go to step 9.

9. Check for continuity between the terminals of climate control unit connector A (20P) and B (16P) as follows.

Terminal	To terminals
A5	A20, B7, B8, B16
A20	B7, B8, B16
B7	B8, B16
B8	B16

Is there continuity between any of the terminals?

YES—Repair the short in the wires. ■

NO—Go to step 10.

10. Turn the ignition switch ON (II), and check the same terminals for voltage.

CLIMATE CONTROL UNIT CONNECTOR A (20P)

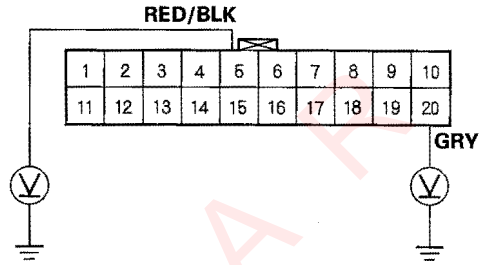

Wire side of female terminals

CLIMATE CONTROL UNIT CONNECTOR B (16P)

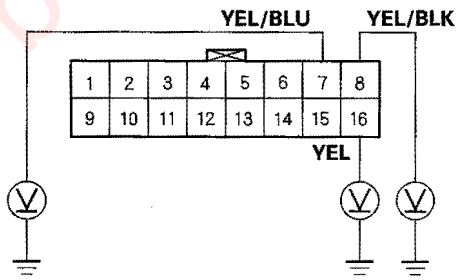

Wire side of female terminals

Is there any voltage?

YES—Repair any short to power in the wire(s) between the climate control unit and the passenger's air mix control motor. This short may also damage the climate control unit. Repair the short to power before replacing the climate control unit. ■

NO—Check for loose wire or poor connections at climate control unit connector A (20P) and B (16P) and at the passenger's air mix control motor 5P connector. If the connections are good, substitute a known-good climate control unit, and recheck. If the symptom/indication goes away, replace the original climate control unit. ■

Protected by A

DTC indicator N or DTC B1238: A Problem in the Passenger's Air Mix Control Linkage, Door, or Motor

1. Clear the DTC by turning the ignition switch OFF, and then ON (II).
2. Operate the climate control system in several modes.
3. Check for DTCs using the self-diagnostic or HDS.

   Is DTC N or B1238 indicated?

   YES—Go to step 4.

   NO—Intermittent failure. ■
4. Turn the ignition switch OFF.
5. Test the passenger's air mix control motor (see page 21-69).

   Is the passenger's air mix control motor OK?

   YES—Substitute a known-good climate control unit, and recheck. If the symptom/indication goes away, replace the original climate control unit. ■

   NO—Replace the passenger's air mix control motor, or repair the passenger's air mix control linkage or door. ■

DTC indicator O or DTC B1239: An Open or Short in the Driver's Mode Control Motor Circuit

1. Clear the DTC by turning the ignition switch OFF, and then ON (II).
2. Operate the climate control system in several modes.
3. Check for DTCs using the self-diagnostic or HDS.

   Is DTC O or B1239 indicated?

   YES—Go to step 4.

   NO—Intermittent failure, check for loose wires or poor connections on the driver's mode control motor circuit. ■
4. Turn the ignition switch OFF.
5. Test the driver's mode control motor (see page 21-70).

   Is the driver's mode control motor OK?

   YES—Go to step 6.

   NO—Replace the driver's mode control motor (see page 21-70). ■
6. Disconnect the driver's mode control motor 10P connector.
7. Disconnect climate control unit connector A (20P) and B (16P).

(cont'd)

Protected by A R

DTC Troubleshooting (cont'd)

8. Check for continuity between following terminals of climate control unit connector A (20P) and B (16P) and the driver's mode control motor 10P connector.

20P:	10P:
No. 5	No. 10
16P:	10P:
No. 1	No. 2
No. 2	No. 1
No. 9	No. 9
No. 10	No. 8
No. 11	No. 6
No. 12	No. 7

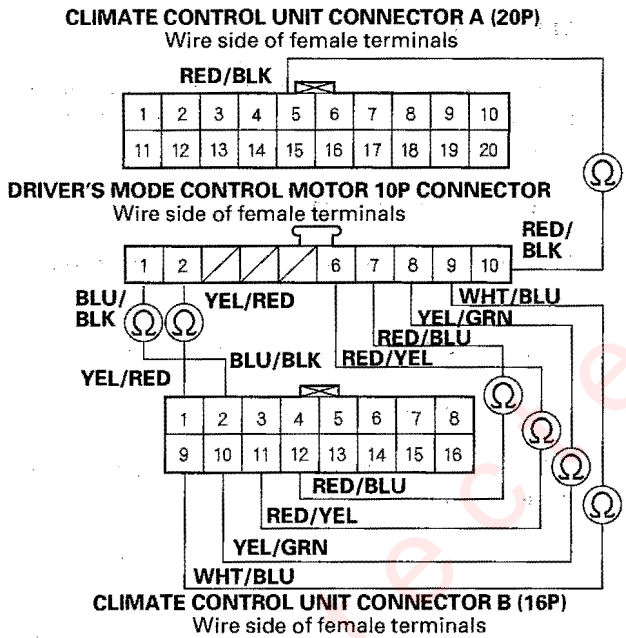

Is there continuity?

YES—Go to step 9.

NO—Repair any open in the wire(s) between the climate control unit and the driver's mode control motor.■

9. Check for continuity between body ground and climate control unit connector A (20P) terminals No. 5 individually, and between body ground and climate control unit connector B (16P) terminals No. 1, 2, 9, 10, 11 and 12 individually.

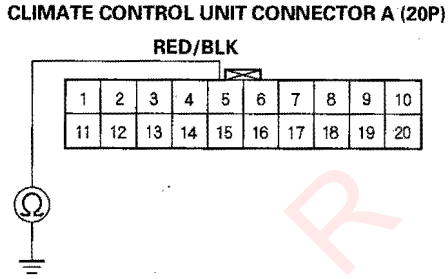

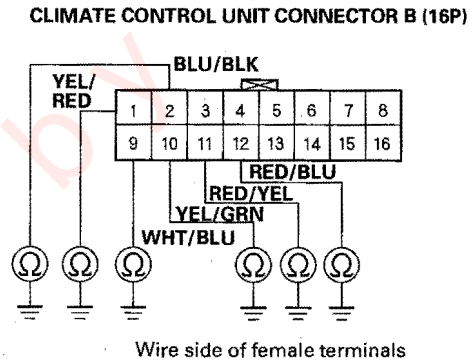

Is there continuity?

YES—Repair any short to body ground in the wire(s) between the climate control unit and the driver's mode control motor.■

NO—Go to step 10.

10. Check for continuity between the terminals of climate control unit connector A (20P) and B (16P) as follows.

Terminal	To terminals
A5	B1, B2, B9, B10, B11, B12
B1	B2, B9, B10, B11, B12
B2	B9, B10, B11, B12
B9	B10, B11, B12
B10	B11, B12
B11	B12

Is there continuity between any of the terminals?

YES—Repair the short in the wires.■

NO—Go to step 11.

Processed by AR

11. Turn the ignition switch ON (II), and check the same terminals for voltage.

CLIMATE CONTROL UNIT CONNECTOR A (20P)

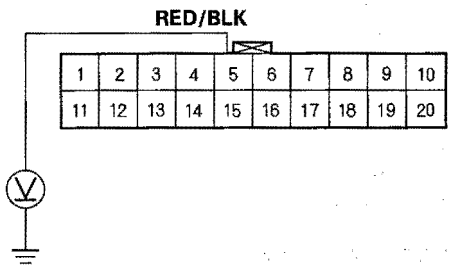

Wire side of female terminals

CLIMATE CONTROL UNIT CONNECTOR B (16P)

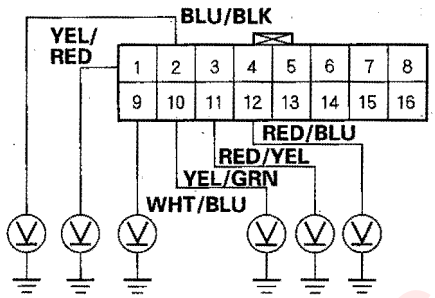

Wire side of female terminals

Is there any voltage?

YES—Repair any short to power in the wire(s) between the climate control unit and the driver's mode control motor. This short may also damage the climate control unit. Repair the short to power before replacing the climate control unit.■

NO—Check for loose wire or poor connections at climate control unit connector A (20P) and B (16P) and at the driver's mode control motor 10P connector. If the connections are good, substitute a known-good climate control unit, and recheck. If the symptom/indication goes away, replace the original climate control unit.■

DTC indicator P or DTC B1240: A Problem in the Driver's Mode Control Linkage, Doors, or Motor

1. Clear the DTC by turning the ignition switch OFF, and then ON (II).
2. Operate the climate control system in several modes.
3. Check for DTCs using the self-diagnostic or HDS.

   Is DTC P or B1240 indicated?

   YES—Go to step 4.

   NO—Intermittent failure.■
4. Turn the ignition switch OFF.
5. Test the driver's mode control motor (see page 21-70).

   Is the driver's mode control motor OK?

   YES—Substitute a known-good climate control unit, and recheck. If the symptom/indication goes away, replace the original climate control unit.■

   NO—Replace the driver's mode control motor (see page 21-70), or repair the driver's mode control linkage or doors.■

Protected by AR

DTC Troubleshooting (cont'd)

DTC indicator Q or DTC B1242: An Open or Short in the Passenger's Mode Control Motor Circuit

1. Clear the DTC by turning the ignition switch OFF, and then ON (II).
2. Operate the climate control system in several modes.
3. Check for DTCs using the self-diagnostic or HDS.

   Is DTC Q or B1242 indicated?

   YES—Go to step 4.

   NO—Intermittent failure, check for loose wires or poor connections on the passenger's mode control motor circuit. ■
4. Turn the ignition switch OFF.
5. Test the passenger's mode control motor (see page 21-71).

   Is the passenger's mode control motor OK?

   YES—Go to step 6.

   NO—Replace the passenger's mode control motor (see page 21-71). ■
6. Disconnect the passenger's mode control motor 10P connector.
7. Disconnect climate control unit connector A (20P) and B (16P).
8. Check for continuity between following terminals of climate control unit connector A (20P) and B (16P) and the passenger's mode control motor 10P connector.

20P:	10P:
No. 5	No. 10
16P:	10P:
No. 5	No. 2
No. 6	No. 1
No. 13	No. 8, 9
No. 14	No. 7
No. 15	No. 6

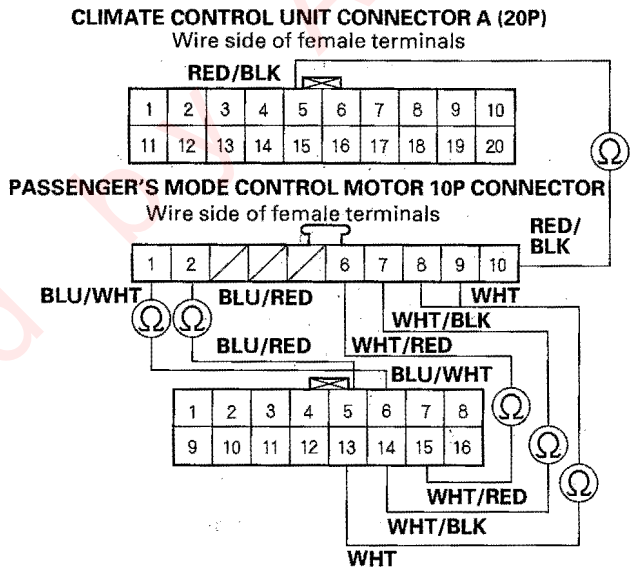

Is there continuity?

YES—Go to step 9.

NO—Repair any open in the wire(s) between the climate control unit and the passenger's mode control motor. ■

9. Check for continuity between body ground and climate control unit connector A (20P) terminals No. 5 individually, and between body ground and climate control unit connector B (16P) terminals No. 5, 6, 13, 14 and 15 individually.

Protected by CARFAX

CLIMATE CONTROL UNIT CONNECTOR A (20P)

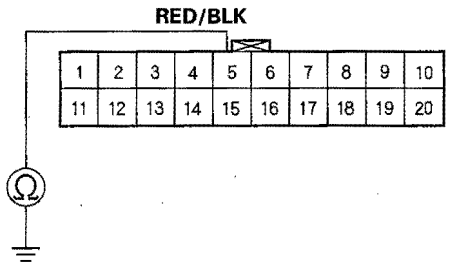

Wire side of female terminals

CLIMATE CONTROL UNIT CONNECTOR B (16P)

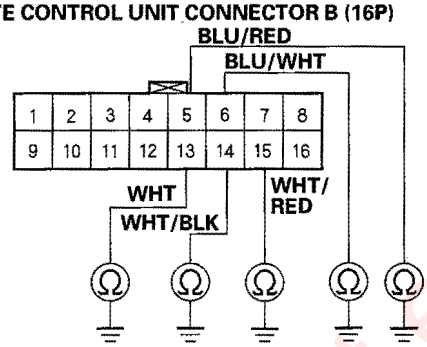

Wire side of female terminals

Is there continuity?

YES—Repair any short to body ground in the wire(s) between the climate control unit and the passenger's mode control motor.■

NO—Go to step 10.

10. Check for continuity between the terminals of climate control unit connector A (20P) and B (16P) as follows.

Terminal	To terminals
A5	B5, B6, B13, B14, B15
B5	B6, B13, B14, B15
B6	B13, B14, B15
B13	B14, B15
B14	B15

Is there continuity between any of the terminals?

YES—Repair the short in the wires.■

NO—Go to step 11.

11. Turn the ignition switch ON (II), and check the same terminals for voltage.

CLIMATE CONTROL UNIT CONNECTOR A (20P)

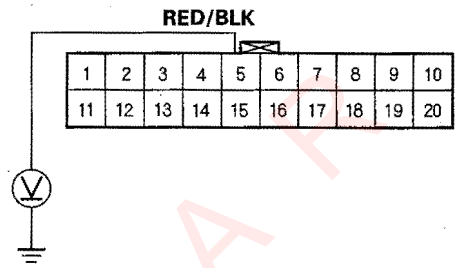

Wire side of female terminals

CLIMATE CONTROL UNIT CONNECTOR B (16P)

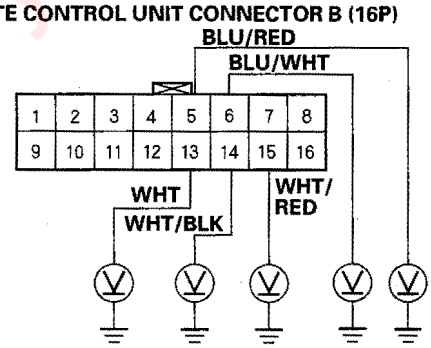

Wire side of female terminals

Is there any voltage?

YES—Repair any short to power in the wire(s) between the climate control unit and the passenger's mode control motor. This short may also damage the climate control unit. Repair the short to power before replacing the climate control unit.■

NO—Check for loose wire or poor connections at climate control unit connector A (20P) and B (16P) and at the passenger's mode control motor 10P connector. If the connections are good, substitute a known-good climate control unit, and recheck. If the symptom/indication goes away, replace the original climate control unit.■

Protected by A P

DTC Troubleshooting (cont'd)

DTC indicator R or DTC B1243: A Problem in the Passenger's Mode Control Linkage, Doors, or Motor

1. Clear the DTC by turning the ignition switch OFF, and then ON (II).
2. Operate the climate control system in several modes.
3. Check for DTCs using the self-diagnostic or HDS.

   Is DTC R or B1243 indicated?

   YES—Go to step 4.

   NO—Intermittent failure. ■
4. Turn the ignition switch OFF.
5. Test the passenger's mode control motor (see page 21-71).

   Is the passenger's mode control motor OK?

   YES—Substitute a known-good climate control unit, and recheck. If the symptom/indication goes away, replace the original climate control unit. ■

   NO—Replace the passenger's mode control motor (see page 21-71), or repair the passenger's mode control linkage or doors. ■

DTC indicator S or DTC B1241: A Problem in the Blower Motor Circuit

1. Clear the DTC by turning the ignition switch OFF, and then ON (II).
2. Operate the climate control system in several modes.
3. Check for DTCs using the self-diagnostic or HDS.

   Is DTC S or B1241 indicated?

   YES—Go to step 4.

   NO—Intermittent failure, check for loose wires or poor connections on the blower motor circuit. ■
4. Turn the ignition switch OFF.
5. Check the No. 21 (40A) fuse in the under-hood fuse/relay box, and the No. 30 (7.5A) fuse in the under-dash fuse/relay box.

   Are the fuses OK?

   YES—Go to step 6.

   NO—Replace the fuse(s), and recheck. ■
6. Connect the No. 1 terminal of the blower motor 2P connector to body ground with a jumper wire.

BLOWER MOTOR 2P CONNECTOR

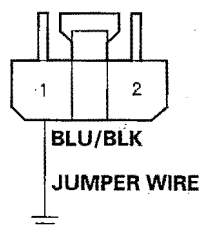

Wire side of female terminals

7. Turn the ignition switch ON (II).

   Does the blower motor run?

   YES—Go to step 8.

   NO—Go to step 23.

Protected by AR

8. Turn the ignition switch OFF.
9. Disconnect the jumper wire.
10. Disconnect the power transistor 4P connector.
11. Check for continuity between the No. 3 terminal of the power transistor 4P connector and body ground.

POWER TRANSISTOR 4P CONNECTOR

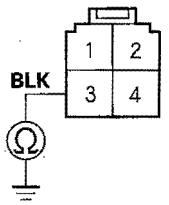

Wire side of female terminals

Is there continuity?

YES—Go to step 12.

NO—Check for an open in the BLK wire between the power transistor and body ground. If the wire is OK, check for poor ground at G506.■

12. Connect the No. 1 and No. 3 terminals of the power transistor 4P connector with a jumper wire.

POWER TRANSISTOR 4P CONNECTOR

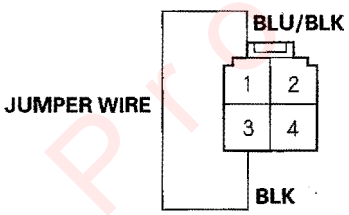

Wire side of female terminals

13. Turn the ignition switch ON (II).

Does the blower motor run at high speed?

YES—Go to step 14.

NO—Repair open in the BLU/BLK wire between the power transistor and the blower motor.■

14. Turn the ignition switch OFF.
15. Disconnect the jumper wire.
16. Disconnect climate control unit connector A (20P).
17. Check for continuity between the No. 7 and No. 8 terminals of climate control unit connector A (20P) and body ground individually.

CLIMATE CONTROL UNIT CONNECTOR A (20P)

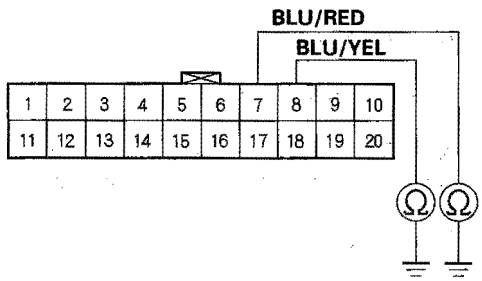

Wire side of female terminals

Is there continuity?

YES—Repair any short to body ground in the wire(s) between the climate control unit and the power transistor.■

NO—Go to step 18.

(cont'd)

Protected by ARS

DTC Troubleshooting (cont'd)

18. Check for continuity between the following terminals of climate control unit connector A (20P) and power transistor 4P connector.

20P:	4P:
No. 7	No. 2
No. 8	No. 4

CLIMATE CONTROL UNIT CONNECTOR A (20P)
Wire side of female terminals

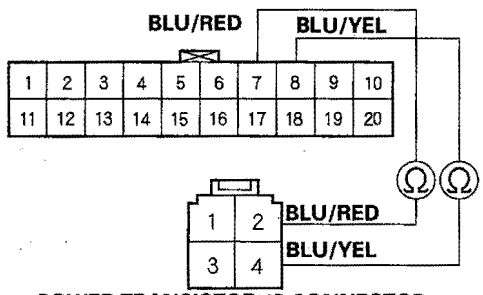

POWER TRANSISTOR 4P CONNECTOR
Wire side of female terminals

Is there continuity?

YES—Go to step 19.

NO—Repair any open in the wire(s) between the climate control unit and the power transistor. ■

19. Start the engine.

20. Check for voltage between the No. 7 and No. 8 terminals of climate control connector A (20P) and body ground individually.

CLIMATE CONTROL UNIT CONNECTOR A (20P)

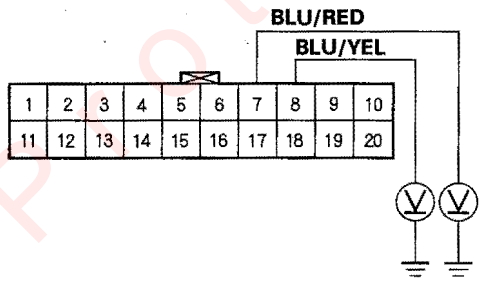

Wire side of female terminals

Is there 1 V or more?

YES—Repair short to power in the wires. ■

NO—Go to step 21.

21. Reconnect climate control unit connector A (20P).

22. Test the power transistor (see page 21-67).

Is the power transistor OK?

YES—Check for loose wire or poor connections at climate control unit connector A (20P) and at the power transistor 4P connector. If the connections are good, substitute a known-good climate control unit, and recheck. If the symptom/indication goes away, replace the original climate control unit. ■

NO—Replace the power transistor. ■

23. Disconnect the jumper wire.

24. Disconnect the blower motor 2P connector.

25. Measure the voltage between the No. 2 terminal of the blower motor 2P connector and body ground.

BLOWER MOTOR 2P CONNECTOR

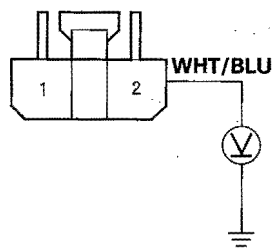

Wire side of female terminals

Is there battery voltage?

YES—Replace the blower motor. ■

NO—Go to step 26.

26. Turn the ignition switch OFF.

27. Remove the blower motor relay from the under-hood fuse/relay box, and test it (see page 22-75).

Is the relay OK?

YES—Go to step 28.

NO—Replace the blower motor relay. ■

Protected by AP

28. Measure the voltage between the No. 2 terminal of the blower motor relay 4P socket and body ground.

BLOWER MOTOR RELAY 4P SOCKET

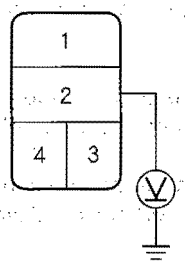

Is there battery voltage?

YES—Go to step 29.

NO—Replace the under-hood fuse/relay box.■

29. Turn the ignition switch ON (II).

30. Measure the voltage between the No. 4 terminal of the blower motor relay 4P socket and body ground.

BLOWER MOTOR RELAY 4P SOCKET

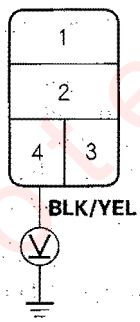

Is there battery voltage?

YES—Go to step 31.

NO—Repair open in the wire between the No. 30 fuse in the under-dash fuse/relay box and the blower motor relay.■

31. Turn the ignition switch OFF.

32. Check for continuity between the No. 3 terminal of the blower motor relay 4P socket and body ground.

BLOWER MOTOR RELAY 4P SOCKET

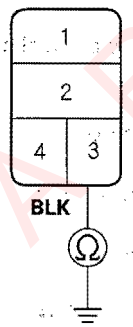

Is there continuity?

YES—Repair open in the WHT/BLU wire between the blower motor relay and the blower motor.■

NO—Check for an open in the wire between the blower motor relay and body ground. If the wire is OK, check for poor ground at G302.■

Protected by AR

DTC Troubleshooting (cont'd)

DTC B1726: Display Panel Control Unit Lost Communication with the Climate Control Unit

1. Clear the DTC by turning the ignition switch OFF, and then ON (II).
2. Operate the climate control system in several modes.
3. Check for DTCs using the self-diagnostic or HDS.

   Is DTC B1726 indicated?

   YES—Go to step 4.

   NO—Intermittent failure. ■
4. Turn the ignition switch OFF.
5. Disconnect the display panel control unit connector B (6P).
6. Disconnect the climate control unit connector A (20P).
7. Check for continuity between following terminals of display panel control unit connector B (6P) and climate control unit connector A (20P).

6P:	20P:
No. 1	No. 4
No. 2	No. 13
No. 3	No. 2
No. 4	No. 12
No. 5	No. 11

DISPLAY PANEL CONTROL UNIT CONNECTOR B (6P)
Wire side of female terminals

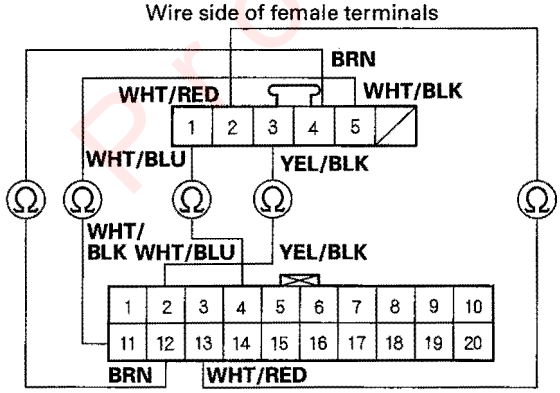

CLIMATE CONTROL UNIT CONNECTOR A (20P)
Wire side of female terminals

Is there continuity?

YES—Go to step 8.

NO—Repair open in the wire between the display unit connector and climate control unit connector. ■

8. Disconnect the driver's and passenger's air mix control motor connectors (5P).
9. Check for continuity between climate control connector A (20P) terminal No. 20 and ground.

CLIMATE CONTROL UNIT CONNECTOR A (20P)

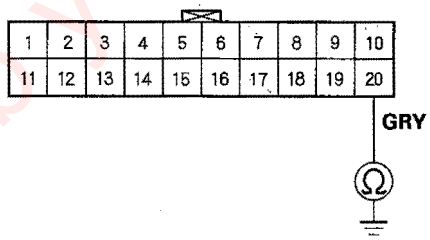

Wire side of female terminals

Is there continuity?

YES—Repair short to ground in the GRY wire. ■

NO—Check for loose wires or poor connections at display panel control unit connector B (6P) and climate control unit connector A (20P). If the connections are good, substitute a known-good display panel control unit and/or climate control unit, and recheck. If the symptom/indication goes away, replace the original display panel control unit and/or climate control unit. ■

Protected by APR

DTC B1202: Climate Control Unit Internal Error

NOTE:
- Check the battery condition (see page 22-74) and the charging system (see page 4-25).
- If you are troubleshooting multiple DTCs, be sure to follow the instructions in B-CAN system diagnosis test mode A (see page 22-108).

1. Clear the DTCs using the HDS.
2. Turn the ignition switch OFF then ON.
3. Turn the climate control system on and operate several functions (A/C on/off, air mix and blend door operations, temperature settings etc.).
4. Check the DTCs by selecting the DTC MENU (DTCs) from the HDS.

   Is DTC B1202 indicated?

   YES—The climate control unit is faulty, replace the climate control unit.■

   NO—Intermittent failure, the climate control unit is OK at this time. Check for loose or poor connections at climate control unit connector A (20P) and B (16P).■

Recirculation Control Motor Circuit Troubleshooting

1. Check the No. 30 (7.5A) fuse in the under-dash fuse/relay box.

   Is the fuse OK?

   YES—Go to step 2.

   NO—Replace the fuse, and recheck.■

2. Disconnect the recirculation control motor 5P connector.
3. Turn the ignition switch ON (II).
4. Measure the voltage between the No. 5 terminal of the recirculation control motor 5P connector and body ground.

RECIRCULATION CONTROL MOTOR 5P CONNECTOR

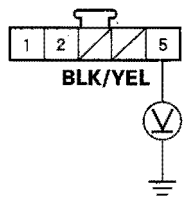

Wire side of female terminals

Is there battery voltage?

YES—Go to step 5.

NO—Repair open in the wire between the No. 30 fuse in the under-dash fuse/relay box and the recirculation control motor .■

(cont'd)

Protected by AR

Recirculation Control Motor Circuit Troubleshooting (cont'd)

5. Turn the ignition switch OFF.
6. Test the recirculation control motor (see page 21-72).

Is the recirculation control motor OK?

YES—Go to step 7.

NO—Replace the recirculation control motor (see page 21-72), or repair the recirculation control linkage or doors. ■

7. Disconnect climate control unit connector A (20P).
8. Check for continuity between the No. 9 and No. 19 terminals of climate control unit connector A (20P) and body ground individually.

CLIMATE CONTROL UNIT CONNECTOR A (20P)

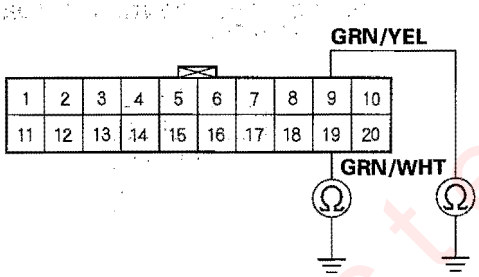

Wire side of female terminals

Is there continuity?

YES—Repair any short to body ground in the wire(s) between the climate control unit and the recirculation control motor. ■

NO—Go to step 9.

9. Turn the ignition switch ON (II), and check the same wires for voltage.

CLIMATE CONTROL UNIT CONNECTOR A (20P)

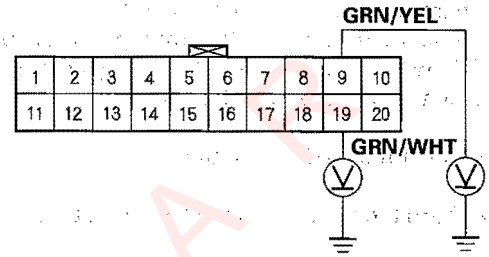

Wire side of female terminals

Is there any voltage?

YES—Repair any short to power in the wire(s) between the climate control unit and the recirculation control motor. This short may also damage the climate control unit. Repair the short to power before replacing the climate control unit. ■

NO—Go to step 10.

10. Turn the ignition switch OFF.

Protected by A

11. Check for continuity between the following terminals of climate control unit connector A (20P) and the recirculation control motor 5P connector.

20P:	5P:
No. 9	No. 1
No. 19	No. 2

CLIMATE CONTROL UNIT CONNECTOR A (20P)
Wire side of female terminals

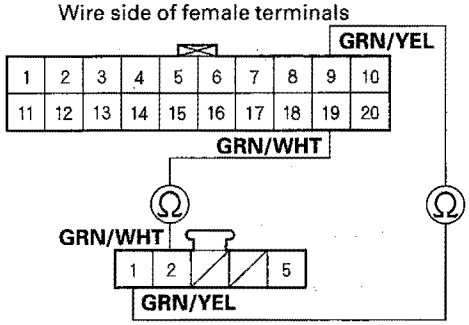

RECIRCULATION CONTROL MOTOR 5P CONNECTOR
Wire side of female terminals

Is there continuity?

YES—Check for loose wires or poor connections at climate control unit connector A (20P) and at the recirculation control motor 5P connector. If the connections are good, substitute a known-good climate control unit, and recheck. If the symptom/indication goes away, replace the original climate control unit.■

NO—Repair any open in the wire(s) between the climate control unit and the recirculation control motor.■

Climate Control Power and Ground Circuit Troubleshooting

1. Check the No. 30 (7.5A) fuse in the under-dash fuse/relay box.

   Is the fuse OK?

   YES—Go to step 2.

   NO—Replace the fuse, and recheck.■

2. Disconnect climate control unit connector A (20P).
3. Turn the ignition switch ON (II).
4. Measure the voltage between the No. 1 terminal of climate control unit connector A (20P) and body ground.

CLIMATE CONTROL UNIT CONNECTOR A (20P)

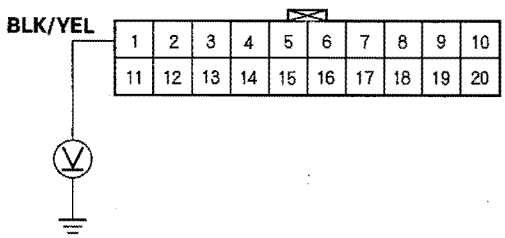

Wire side of female terminals

Is there battery voltage?

YES—Go to step 5.

NO—Repair open in the wire between the No. 30 fuse in the under-dash fuse/relay box and the climate control unit.■

5. Turn the ignition switch OFF.

(cont'd)

Protected by AR

Climate Control Power and Ground Circuit Troubleshooting (cont'd)

6. Check for continuity between the No. 3 (Canada) and No. 6 terminal of climate control unit connector A (20P) and body ground.

Canada:

CLIMATE CONTROL UNIT CONNECTOR A (20P)

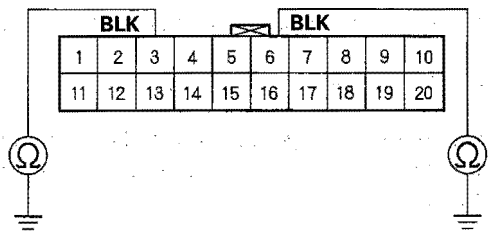

Wire side of female terminals

US:

CLIMATE CONTROL UNIT CONNECTOR A (20P)

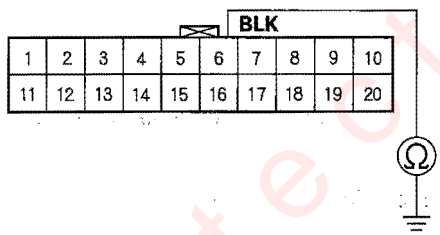

Wire side of female terminals

Is there continuity?

YES—Check for loose wires or poor connections at climate control unit connector A (20P). If the connections are good, substitute a known-good climate control unit, and recheck. If the symptom/indication goes away, replace the original climate control unit.■

NO—Check for an open in the wires between the climate control unit and body ground. If the wire is OK, check for poor ground at G503 and/or G601.■

Radiator and Condenser Fan Low Speed Circuit Troubleshooting

NOTE:
- Do not use this troubleshooting procedure if the compressor is inoperative. Refer to the symptom troubleshooting index.
- Before performing symptom troubleshooting, check for powertrain DTCs (see page 11-3).

1. Check the No. 9 (30A) fuse in the under-hood fuse/relay box, and the No. 30 (7.5A) fuse in the under-dash fuse/relay box.

Are the fuses OK?

YES—Go to step 2.

NO—Replace the fuse(s), and recheck.■

2. Remove the condenser fan relay from the under-hood fuse/relay box, and test it (see page 22-75).

Is the relay OK?

YES—Go to step 3.

NO—Replace the condenser fan relay.■

3. Measure the voltage between the No. 1 terminal of the condenser fan relay 4P socket and body ground.

CONDENSER FAN RELAY 4P SOCKET

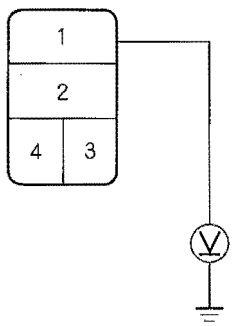

Is there battery voltage?

YES—Go to step 4.

NO—Replace the under-hood fuse/relay box.■

Protected by AR

4. Connect the No. 1 and No. 2 terminals of the condenser fan relay 4P socket with a jumper wire.

CONDENSER FAN RELAY 4P SOCKET

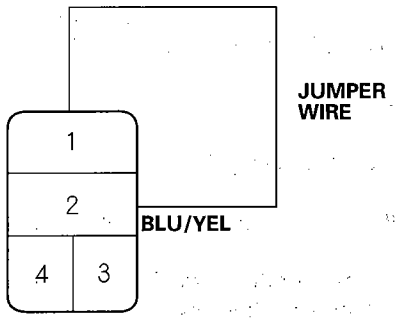

Does the condenser fan run?

YES—Go to step 5.

NO—Go to step 12.

5. Disconnect the jumper wire.
6. Turn the ignition switch ON (II).
7. Measure the voltage between the No. 3 terminal of the condenser fan relay 4P socket and body ground.

CONDENSER FAN RELAY 4P SOCKET

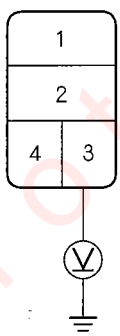

Is there battery voltage?

YES—Go to step 8.

NO—Go to step 32.

8. Turn the ignition switch OFF.
9. Reinstall the condenser fan relay.
10. Turn the ignition switch ON (II).
11. Using the backprobe set, measure the voltage between the No. 6 terminal of ECM/PCM connector A (31P) and body ground with the ECM/PCM connectors connected.

ECM/PCM CONNECTOR A (31P)

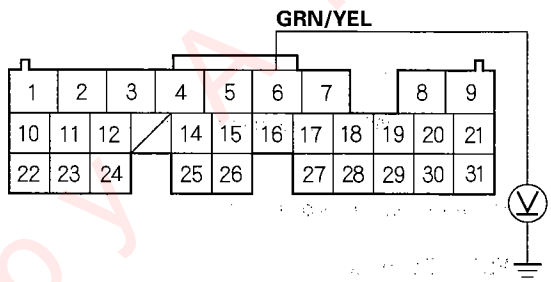

Wire side of female terminals

Is there battery voltage?

YES—Check for loose wires or poor connections at No. 6 terminal of the ECM/PCM connector A (31P). If the connections are good, substitute a known-good ECM/PCM, and recheck. If the symptom/indication goes away, replace the original ECM/PCM, then perform the ECM/PCM idle learn procedure (see page 11-239).■

NO—Repair open in the wire between the condenser fan relay and the ECM/PCM.■

12. Disconnect the jumper wire.
13. Reinstall the condenser fan relay.
14. Disconnect the condenser fan 2P connector.
15. Turn the ignition switch ON (II), then turn the A/C and blower fan switches ON.

(cont'd)

Protected by MR

Radiator and Condenser Fan Low Speed Circuit Troubleshooting (cont'd)

16. Measure the voltage between the No. 2 terminal of the condenser fan 2P connector and body ground.

CONDENSER FAN 2P CONNECTOR

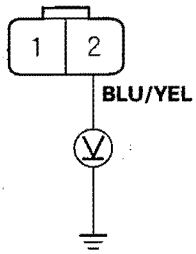

Wire side of female terminals

Is there battery voltage?

YES—Go to step 17.

NO—Repair open in the wire between the condenser fan relay and the condenser fan. ■

17. Turn the A/C and fan switches OFF, then turn the ignition switch OFF.

18. Reconnect the condenser fan 2P connector.

19. Connect the No. 1 terminal of the condenser fan 2P connector to body ground with a jumper wire.

CONDENSER FAN 2P CONNECTOR

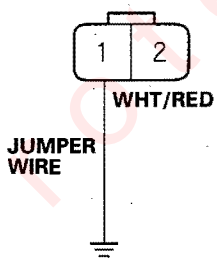

Wire side of female terminals

20. Turn the ignition switch ON (II), then turn the A/C and fan switches ON.

Does the condenser fan run?

YES—Go to step 21.

NO—Replace the condenser fan motor. ■

21. Turn the A/C and fan switches OFF, then turn the ignition switch OFF.

22. Disconnect the jumper wire.

23. Remove the fan control relay from the multi-relay box, and test it (see page 22-75).

Is the relay OK?

YES—Go to step 24.

NO—Replace the fan control relay. ■

24. Turn the ignition switch ON (II), then turn the A/C and fan switches ON.

25. Measure the voltage between the No. 1 terminal of the fan control relay 5P socket and body ground.

FAN CONTROL RELAY 5P SOCKET

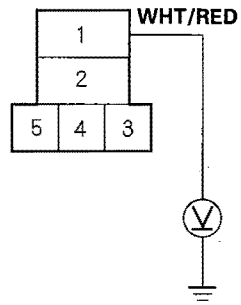

Is there battery voltage?

YES—Go to step 26.

NO—Repair open in the wire between the condenser fan and the fan control relay. ■

26. Turn the A/C and fan switches OFF, then turn the ignition switch OFF.

27. Remove the radiator fan relay from the under-hood fuse/relay box.

Protected by A R

28. Check for continuity between the No. 4 terminal of the fan control relay 5P socket and the No. 1 terminal of the radiator fan relay 4P socket.

FAN CONTROL RELAY 5P SOCKET

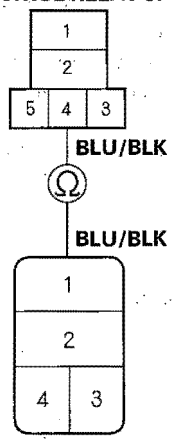

RADIATOR FAN RELAY 4P SOCKET

Is there continuity?

YES—Go to step 29.

NO—Repair open in the wire between the fan control relay and the radiator fan relay. ■

29. Disconnect the radiator fan 2P connector.

30. Check for continuity between the No. 1 terminal of the radiator fan relay 4P socket and the No. 2 terminal of the radiator fan 2P connector.

RADIATOR FAN RELAY 4P SOCKET

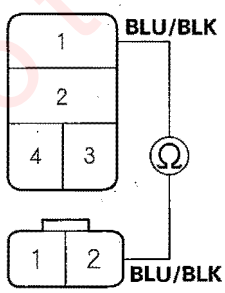

RADIATOR FAN 2P CONNECTOR
Wire side of female terminals

Is there continuity?

YES—Go to step 31.

NO—Repair open in the wire between the radiator fan relay and the radiator fan. ■

31. Check for continuity between the No. 1 terminal of the radiator fan 2P connector and body ground.

RADIATOR FAN 2P CONNECTOR

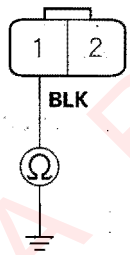

Wire side of female terminals

Is there continuity?

YES—Replace the radiator fan motor. ■

NO—Check for an open in the wire between the radiator fan and body ground. If the wire is OK, check for poor ground at G301. ■

32. Remove A/C diode A from under the dashboard.

33. Using the diode setting (⊣◀⊢) on a DVOM, check for current flow in both directions between the No. 1 and No. 2 terminals of A/C diode A.

A/C DIODE A

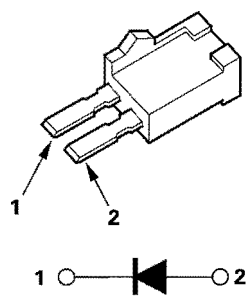

Is there current flow in only one direction?

YES—Go to step 34.

NO—Replace A/C diode A. ■

(cont'd)

Protected by AR

Radiator and Condenser Fan Low Speed Circuit Troubleshooting (cont'd)

34. Turn the ignition switch ON (II).

35. Measure the voltage between the No. 2 terminal of A/C diode A 2P socket and body ground.

A/C DIODE A 2P SOCKET

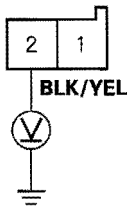

Is there battery voltage?

YES—Repair open in the wire between A/C diode A pin 1 and the condenser fan relay.■

NO—Repair open in the wire between the No. 30 fuse in the under-dash fuse/relay box and A/C diode A pin 2.■

Condenser Fan High Speed Circuit Troubleshooting

NOTE:
- Do not use this troubleshooting procedure if the radiator fan and/or the compressor is inoperative. Refer to the symptom troubleshooting index.
- Before performing symptom troubleshooting, check for powertrain DTCs (see page 11-3).

1. Check the No. 30 (7.5A) fuse in the under-dash fuse/relay box.

   Is the fuse OK?

   YES—Go to step 2.

   NO—Replace the fuse, and recheck.■

2. Remove the fan control relay from the multi-relay box, and test it (see page 22-75).

   Is the relay OK?

   YES—Go to step 3.

   NO—Replace the fan control relay.■

3. Turn the ignition switch ON (II).

4. Measure the voltage between the No. 5 terminal of the fan control relay 5P socket and body ground.

FAN CONTROL RELAY 5P SOCKET

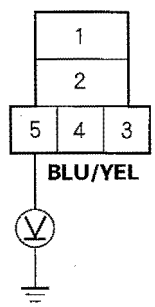

Is there battery voltage?

YES—Go to step 5.

NO—Go to step 9.

5. Turn the ignition switch OFF.

Protected by AR

6. Check for continuity between the No. 2 terminal of the fan control relay 5P socket and body ground.

FAN CONTROL RELAY 5P SOCKET

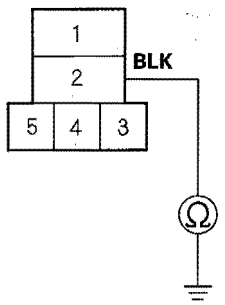

Is there continuity?

YES—Go to step 7.

NO—Check for an open in the wire between the fan control relay and body ground. If the wire is OK, check for poor ground at G301.■

7. Remove the radiator fan relay from the under-hood fuse/relay box.

8. Check for continuity between the No. 3 terminal of the fan control relay 5P socket and the No. 4 terminal of the radiator fan relay 4P socket.

FAN CONTROL RELAY 5P SOCKET

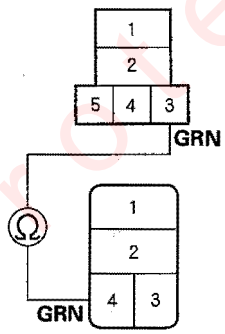

RADIATOR FAN RELAY 4P SOCKET

Is there continuity?

YES—Repair open in the wire between the radiator fan relay terminal No. 4 and the ECM/PCM terminal A7.■

NO—Repair open in the wire between the fan control relay and the radiator fan relay.■

9. Remove A/C diode A from under the dashboard.

10. Using the diode setting(⊷) on a DVOM, check for current flow in both directions between the No. 1 and No. 2 terminals of A/C diode A.

A/C DIODE A

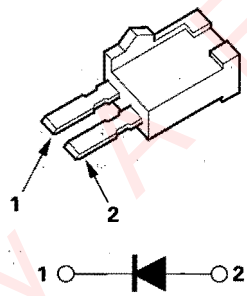

Is there current flow in only one direction?

YES—Go to step 11.

NO—Replace A/C diode A.■

11. Turn the ignition switch ON (II).

12. Measure the voltage between the No. 2 terminal of A/C diode A 2P socket and body ground.

A/C DIODE A 2P SOCKET

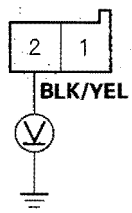

Is there battery voltage?

YES—Repair open in the GRN wire between A/C diode A and the condenser fan control relay.■

NO—Repair open in the wire between the No. 30 fuse in the under-dash fuse/relay box and A/C diode A.■

Protected by ARR

Radiator and Condenser Fan High Speed Circuit Troubleshooting

NOTE:
- Do not use this troubleshooting procedure if only one fan is inoperative, or if the compressor is inoperative. Refer to the symptom troubleshooting index.
- Before performing symptom troubleshooting, check for powertrain DTCs (see page 11-3).
- The normal operating A/C pressure for the radiator and condenser fans to run at high speed is 1,470 kPa (15.0 kgf/cm², 213 psi).

1. Disconnect the A/C pressure switch 4P connector.
2. Check for continuity between the No. 2 terminals of the A/C pressure switch 4P connector and body ground.

A/C PRESSURE SWITCH 4P CONNECTOR

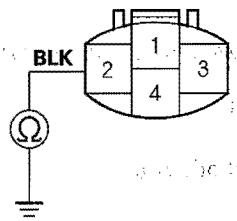

Wire side of female terminals

Is there continuity?

YES—Go to step 3.

NO—Check for an open in the wire between the A/C pressure switch and body ground. If the wire is OK, check for poor ground at G201.■

3. Using the backprobe set, check for continuity between the No. 14 terminal of the ECM/PCM connector E (31P) and the No. 3 terminal of the A/C pressure switch 4P connector.

ECM/PCM CONNECTOR E (31P)
Wire side of female terminals

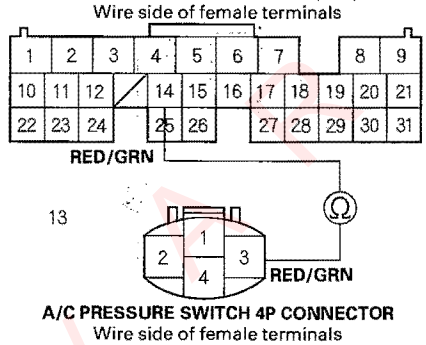

A/C PRESSURE SWITCH 4P CONNECTOR
Wire side of female terminals

Is there continuity?

YES—Go to step 4.

NO—Repair open in the wire between the ECM/PCM and the A/C pressure switch.■

4. Turn the ignition switch ON (II).
5. Turn the A/C and blower fan switches on.
6. Connect the No. 2 and No. 3 terminals of the A/C pressure switch 4P connector with a jumper wire.

A/C PRESSURE SWITCH 4P CONNECTOR

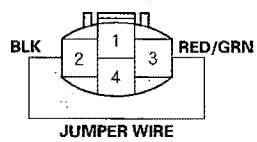

Wire side of female terminals

Does the radiator and condenser fans run at high speed?

YES—Replace the A/C pressure switch.■

NO—Check for loose wires or poor connections at ECM/PCM connector E (31P). If the connections are good, substitute a known-good ECM/PCM, and recheck. If the symptom/indication goes away, replace the original ECM/PCM, then perform the ECM/PCM idle learn procedure (see page 11-239).■

Protected by

Compressor Clutch Circuit Troubleshooting

NOTE:
- It is normal for the compressor to turn off under certain conditions, such as low idel, high engine coolant temperature, or hard acceleration.
- Do not use this troubleshooting procedure if the fans are also inoperative with the A/C on. Refer to the symptom troubleshooting index.
- Before performing symptom troubleshooting, check for powertrain DTCs (see page 11-3).

1. Check the No. 12 (7.5A) fuse in the under-hood fuse/relay box, and the No. 30 (7.5A) fuse in the under-dash fuse/relay box.

   Are the fuses OK?

   YES—Go to step 2.

   NO—Replace the fuse(s), and recheck. ■

2. Check the engine coolant temperature, and idle speed (use the HDS PGM-FI data list if possible).

ECT Sensor	169—194°F (76—90°C)
TPS	About 0.5 V
RPM	More than 790

   Is the coolant temperature, and idle speed OK?

   YES—Go to step 3.

   NO—Troubleshoot and repair the cause of the high engine coolant temperature, or low idle. ■

3. Remove the compressor clutch relay from the under-hood fuse/relay box, and test it (see page 22-75).

   Is the relay OK?

   YES—Go to step 4.

   NO—Replace the compressor clutch relay. ■

4. Measure the voltage between the No. 1 terminal of the compressor clutch relay 4P socket and body ground.

COMPRESSOR CLUTCH RELAY 4P SOCKET

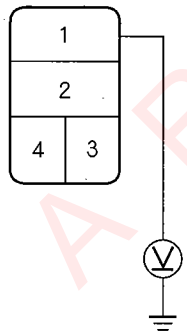

   Is there battery voltage?

   YES—Go to step 5.

   NO—Replace the under-hood fuse/relay box. ■

5. Connect the No. 1 and No. 2 terminals of the compressor clutch relay 4P socket with a jumper wire.

COMPRESSOR CLUTCH RELAY 4P SOCKET

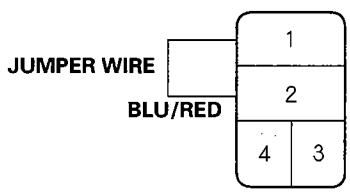

   Does the compressor clutch click?

   YES—Go to step 6.

   NO—Go to step 14.

(cont'd)

Protected by AR

Compressor Clutch Circuit Troubleshooting (cont'd)

6. Disconnect the jumper wire.
7. Turn the ignition switch ON (II).
8. Measure the voltage between the No. 4 terminal of the compressor clutch relay 4P socket and body ground.

COMPRESSOR CLUTCH RELAY 4P SOCKET

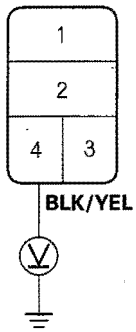

Is there battery voltage?

YES—Go to step 9.

NO—Repair open in the wire between the No. 30 fuse in the under-dash fuse/relay box and the compressor clutch relay. ■

9. Turn the ignition switch OFF.
10. Reinstall the compressor clutch relay.
11. Make sure the A/C switch is OFF.
12. Turn the ignition switch ON (II).
13. Using the backprobe set, measure the voltage between the No. 27 terminal of ECM/PCM connector A (31P) and body ground with the ECM/PCM connectors connected.

ECM/PCM CONNECTOR A (31P)

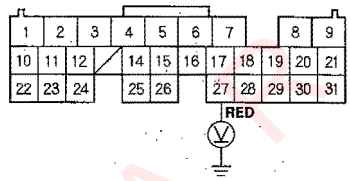

Wire side of female terminals

Is there battery voltage?

YES—Check for loose wires or poor connections at ECM/PCM connector A (31P). If the connections are good, check the ECM/PCM grounds. If the grounds are good, substitute a known-good ECM/PCM, and recheck. If the symptom/indication goes away, replace the original ECM/PCM then perform the ECM/PCM idle learn procedure (see page 11-239). ■

NO—Repair open in the wire between the compressor clutch relay and the ECM/PCM. ■

14. Disconnect the jumper wire.
15. Disconnect the compressor clutch 1P connector.
16. Check for continuity between the No. 2 terminal of the compressor clutch relay 4P socket and the No. 1 terminal of the compressor clutch 1P connector.

COMPRESSOR CLUTCH RELAY 4P SOCKET

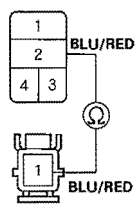

COMPRESSOR CLUTCH 1P CONNECTOR
Terminal side of male terminals

Is there continuity?

YES—Check the compressor clutch clearance, and the compressor clutch field coil (see page 21-82). Repair as needed. ■

NO—Repair open in the wire between the compressor clutch relay and the compressor clutch. ■

Protected by AIM

A/C Pressure Switch Circuit Troubleshooting

NOTE:
- Do not use this troubleshooting procedure if any of the following items are operative; condenser fan, radiator fan, A/C compressor. Refer to the symptom troubleshooting index.
- Before performing symptom troubleshooting, check for power train DTCs (see page 11-3).

1. Check for body DTCs using B-CAN system diagnosis test mode A troubleshooting (see page 22-108).

   Are there any DTCs indicated?

   YES—Do the appropriate troubleshooting for the DTC indicated.■

   NO—Go to step 2.

2. Disconnect the A/C pressure switch 4P connector.

3. Turn the ignition switch ON (II).

4. Measure the voltage between the No. 1 terminal of the A/C pressure switch 4P connector and body ground.

A/C PRESSURE SWITCH 4P CONNECTOR

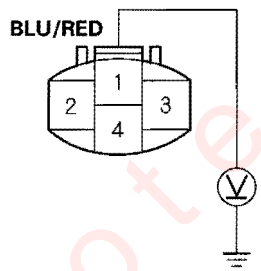

Wire side of female terminals

Is there 5 V or more?

YES—Go to step 5.

NO—Repair open in the wire between the relay control module and the A/C pressure switch.■

5. Turn the ignition switch OFF.

6. Check for continuity between the No. 1 and No. 4 terminals of the A/C pressure switch.

A/C PRESSURE SWITCH

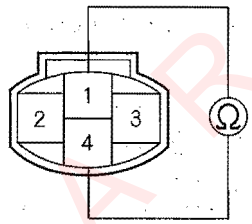

Is there continuity?

YES—Go to step 7.

NO—Go to step 16.

7. Reconnect the A/C pressure switch 4P connector.

8. Disconnect climate control unit connector A (20P).

9. Turn the ignition switch ON (II).

10. Measure the voltage between the No. 14 terminal of climate control unit connector A (20P) and body ground.

CLIMATE CONTROL UNIT CONNECTOR A (20P)

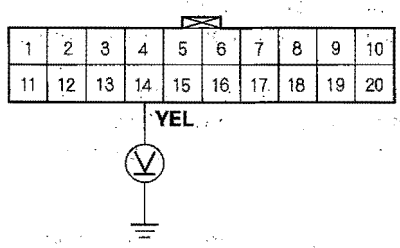

Wire side of female terminals

Is there 5 V or more?

YES—Go to step 11.

NO—Repair the open in the wire between the climate control unit and the A/C pressure switch.■

(cont'd)

Protected by AR

A/C Pressure Switch Circuit Troubleshooting (cont'd)

11. Turn the ignition switch OFF.

12. Measure the evaporator sensor resistance between the No. 5 and No. 18 terminals of climate control unit connector A (20P).

CLIMATE CONTROL UNIT CONNECTOR A (20P)

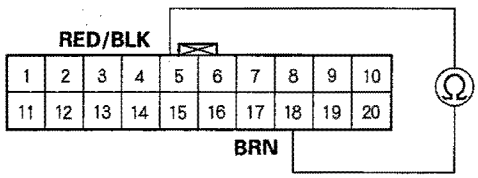

Wire side of female terminals

Is the resistance less than 24 k ohms?

YES—Go to step 13.

NO—Repair cause of high resistance in the evaporator temperature circuit. ■

13. Reconnect climate control unit connector A (20P).

14. Turn the ignition switch ON (II).

15. Check that blower motor operates at all speeds.

Does the blower motor operate at all speeds?

YES—Check for loose wires or poor connections at climate control unit connector A (20P) and at the A/C pressure switch 4P connector. If the connections are good, substitute a known-good climate control unit and recheck. If the symptom/indication goes away, replace the original climate control unit. ■

NO—Repair the problem in the blower motor circuit. ■

16. Check for proper A/C system pressure.

Is the pressure within specifications?

YES—Replace the A/C pressure switch. ■

NO—Repair the A/C pressure problem. ■

Protected by AR

In-car Temperature Sensor Test

1. Remove the in-car temperature sensor (see page 21-63).
2. Check for a change in resistance by heating the sensor with a hair drier or cooling the sensor in a cool cup of water.
3. Compare the resistance reading between the No. 1 and No. 2 terminals of the in-car temperature sensor with the specifications shown in the graph; the resistance should be within the specifications.

IN-CAR TEMPERATURE SENSOR

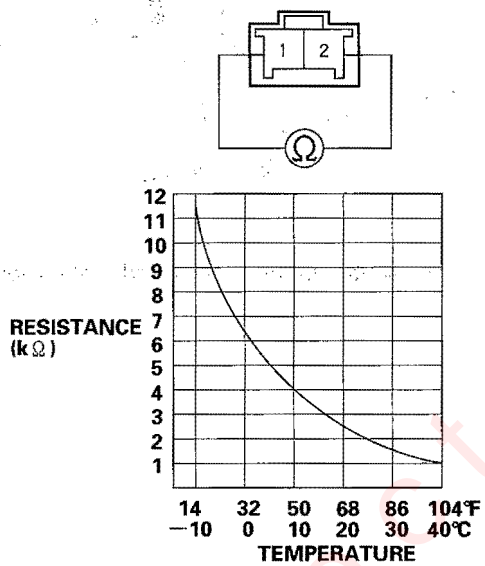

4. If the resistance is not as specified, replace the in-car temperature sensor (see page 21-63).

In-car Temperature Sensor Replacement

1. Remove the driver's dashboard lower cover (see page 20-82).
2. Remove the self-tapping screws and the in-car temperature sensor (A) from the driver's dashboard lower cover (B).

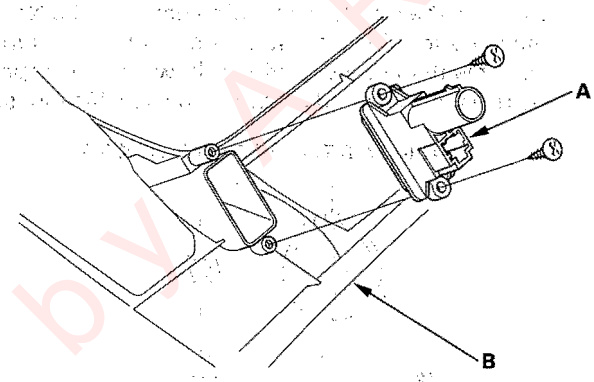

3. Install the sensor in the reverse order of removal. Be sure to connect the air hose securely.

Protected by AR

Outside Air Temperature Sensor Test

1. Remove the outside air temperature (see page 21-64).
2. Dip the sensor in ice water, and measure the resistance. Then pour warm water on the sensor, and check for a change in resistance.
3. Compare the resistance reading between the No. 1 and No. 2 terminals of the outside air temperature sensor with the specifications shown in the graph; the resistance should be within the specifications.

OUTSIDE AIR TEMPERATURE SENSOR

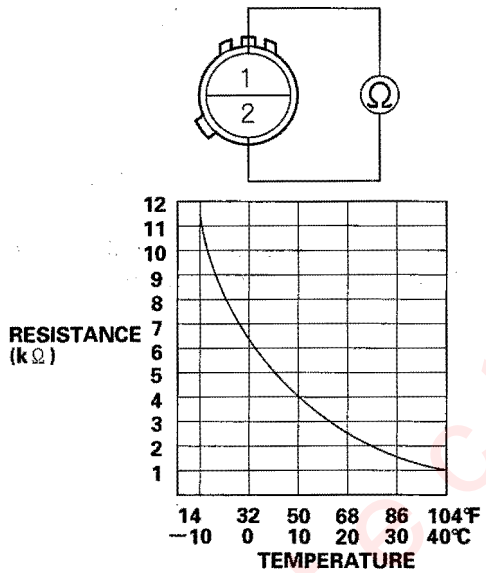

4. If the resistance is not as specified, replace the out side air temperature sensor (see page 21-64).

Outside Air Temperature Sensor Replacement

1. Lift the tab (A) to release the lock, then remove the outside air temperature sensor (B) from the back of the front bumper beam. Disconnect the 2P connector (C) from the outside air temperature sensor.

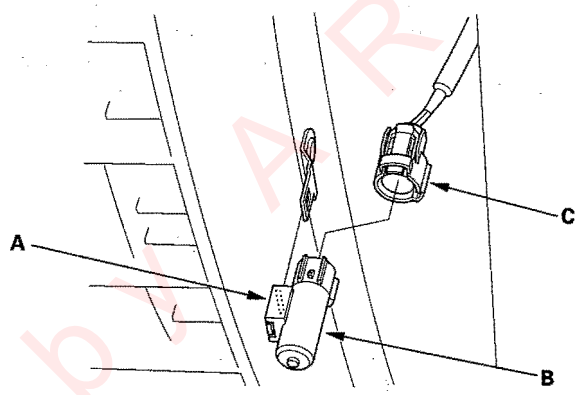

2. Install the sensor in the reverse order of removal.

Protected by AR

Sunlight Sensor Test

1. Remove the sunlight sensor (A) from the dashboard.

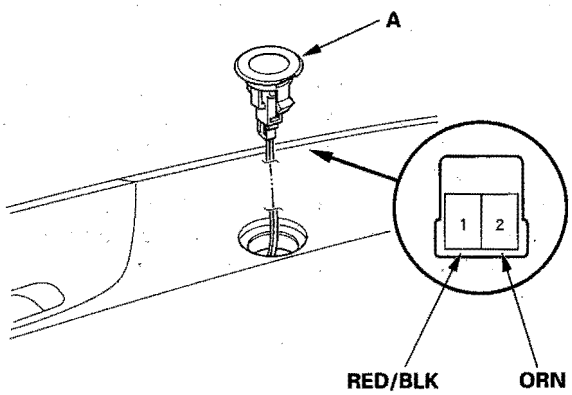

2. Turn the ignition switch ON (II). Measure the voltage between the terminals with the (+) probe on the No. 2 terminal and the (−) probe on the No. 1 terminal with the 2P connector connected.

   NOTE: The voltage readings will not change under the light of a flashlight or a fluorescent lamp. Voltage should be:

   - 3.6−3.7 V or more with the sensor out of direct sunlight.
   - 3.3−3.5 V or less with the sensor in direct sunlight.

3. If the voltage is not as specified, replace the sunlight sensor (see page 21-65).

Sunlight Sensor Replacement

1. Remove the sunlight sensor (A) from the sunlight sensor garnish (B), then disconnect the 2P connector (C). Be careful not to damage the sensor and the dashboard.

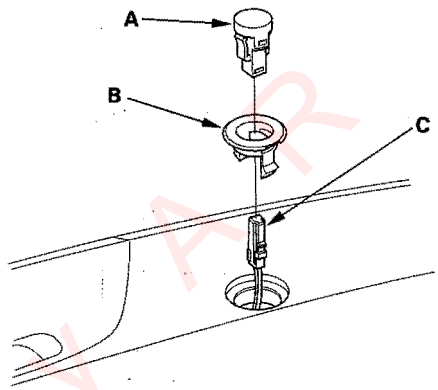

2. Install the sensor in the reverse order of removal.

Protected by AR

Evaporator Temperature Sensor Test

1. Remove the evaporator temperature sensor (see page 21-66).

2. Dip the sensor in ice water, and measure the resistance between its terminals.

EVAPORATOR TEMPERATURE SENSOR

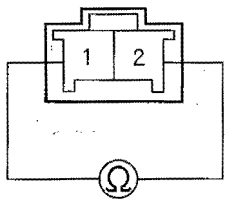

Terminal side of male terminals

3. Then pour warm water on the sensor, and check for a change in resistance.

4. Compare the resistance readings with the specifications shown in the graph; the resistance should be within the specifications.

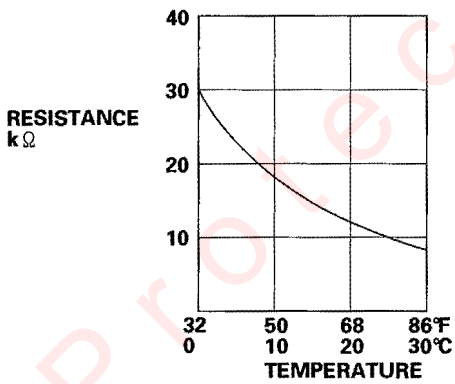

5. If the resistance is not as specified, replace the evaporator temperature sensor (see page 21-66).

Evaporator Temperature Sensor Replacement

1. Remove the passenger's dashboard lower cover (see page 20-84).

2. Disconnect the 4P connector (A) from the power transistor then remove the self-tapping screws and carefully pull out the power transistor (B). Disconnect the 2P connector (C) from the evaporator temperature sensor (D), then remove the connector clip (E). Remove the self-tapping screw, and carefully pull out the evaporator temperature.

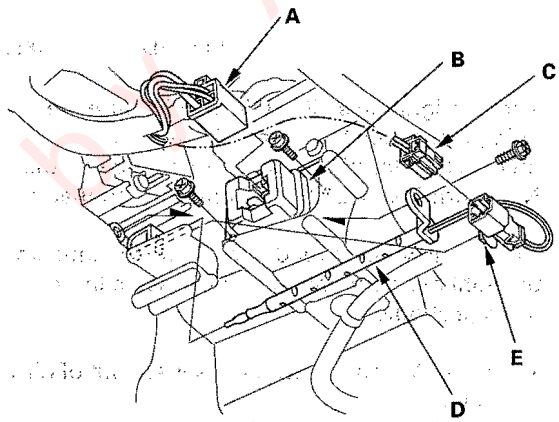

3. Install in the reverse order of removal.

Protected by AP

Power Transistor Test

1. Disconnect the 4P connector from the power transistor.

2. Measure the resistance between the No. 1 and No. 2 terminals of the power transistor. It should be about 1.5 kΩ.

   - If the resistance is within the specifications, go to step 3.
   - If the resistance is not within the specifications, replace the power transistor.

POWER TRANSISTOR

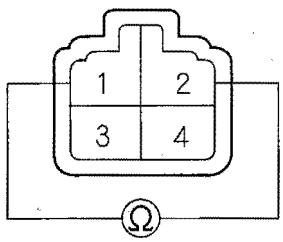

3. Carefully release the lock tab on the No. 4 terminal (BLU/YEL) (A) in the 4P connector, then remove the terminal and insulate it from body ground.

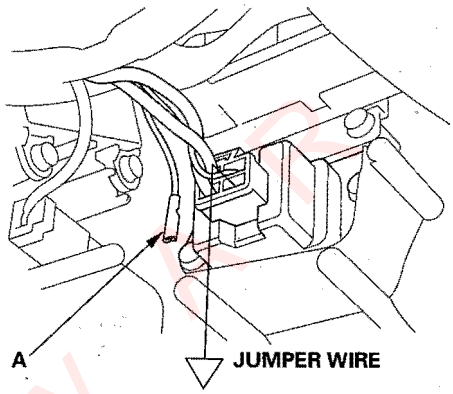

4. Reconnect the 4P connector to the power transistor.

5. Make sure the BLU/YEL wire is completely isolated, then supply 12 volts to the No. 4 cavity with a jumper wire.

6. Turn the ignition switch ON (II), and check that the blower motor runs.

   - If the blower motor does not run, replace the power transistor.
   - If the blower motor runs, the power transistor is OK.

Protected by KR

Driver's Air Mix Control Motor Test

NOTE: Before testing, check for HVAC DTCs (see page 21-8).

1. Disconnect the 5P connector from the driver's air mix control motor.

NOTICE
Incorrectly applying power and ground to the driver's air mix control motor will damage it. Follow the instructions carefully.

2. Connect battery power to the No. 1 terminal of the driver's air mix control motor, and ground the No. 2 terminal; the driver's air mix control motor should run, and stop at Max Hot. If it doesn't, reverse the connections; the driver's air mix control motor should run, and stop at Max Cool.

3. If the driver's air mix control motor did not run in step 2, remove it, then check the driver's air mix control linkage and door for smooth movement.

- If the linkage and door move smoothly, replace the driver's air mix control motor.
- If the linkage or door sticks or binds, repair them as needed.
- If the driver's air mix control motor runs smoothly, go to step 4.

DRIVER'S AIR MIX CONTROL MOTOR

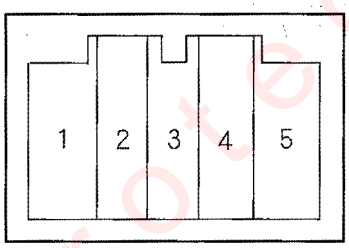

4. Measure the resistance between the No. 4 and No. 5 terminals. It should be between 4.2 to 7.8 kΩ.

5. Reconnect the driver's air mix control motor 5P connector, then turn the ignition switch ON (II).

6. Using the backprobe set, measure the voltage between the No. 3 and No. 5 terminals.

Max Cool—about 1.0 V
Max Hot—about 4.0 V

7. If either the resistance or voltage readings are not as specified, replace the driver's air mix control motor.

Driver's Air Mix Control Motor Replacement

1. Remove the driver's dashboard lower cover (see page 20-82).

2. Disconnect the 10P connector (A) from the driver's mode control motor. Disconnect the 5P connector (B) from the driver's air mix control motor (C). Remove the self-tapping screws and the driver's air mix control motor from the heater unit.

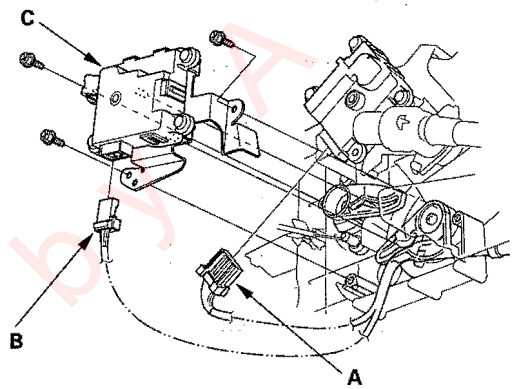

3. Install the motor in the reverse order of removal. Make sure the pin on the motor is properly engaged with the linkage. After installation, make sure the motor runs smoothly.

Protected by A P

Passenger's Air Mix Control Motor Test

NOTE: Before testing, check for HVAC DTCs (see page 21-8).

1. Disconnect the 5P connector from the passenger's air mix control motor.

   NOTICE
   Incorrectly applying power and ground to the passenger's air mix control motor will damage it. Follow the instructions carefully.

2. Connect battery power to the No. 1 terminal of the passenger's air mix control motor, and ground the No. 2 terminal; the passenger's air mix control motor should run, and stop at Max Hot. If it doesn't, reverse the connections; the passenger's air mix control motor should run, and stop at Max Cool.

3. If the passenger's air mix control motor did not run in step 2, remove it, then check the passenger's air mix control linkage and door for smooth movement.

   - If the linkage and door move smoothly, replace the passenger's air mix control motor (see page 21-69).
   - If the linkage or door sticks or binds, repair them as needed.
   - If the passenger's air mix control motor runs smoothly, go to step 4.

PASSENGER'S AIR MIX CONTROL MOTOR

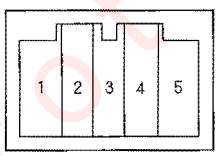

4. Measure the resistance between the No. 4 and No. 5 terminals. It should be between 4.2 to 7.8 kΩ.

5. Reconnect the passenger's air mix control motor 5P connector, then turn the ignition switch ON (II).

6. Using the backprobe set, measure the voltage between the No. 3 and No. 5 terminals.

   Max Cool—about 1.0 V
   Max Hot—about 4.0 V

7. If either the resistance or voltage readings are not as specified, replace the passenger's air mix control motor (see page 21-69).

Passenger's Air Mix Control Motor Replacement

1. Turn the ignition switch OFF.

2. Remove the glove box housing (see page 20-85).

3. Remove the throttle actuator control module (see page 11-216).

4. Remove the climate control unit (see page 21-73).

5. Disconnect the 10P connector (A) from the passenger's mode control motor. Remove the retainer (B) from the passenger's air mix control motor (C), then disconnect the 5P connector (D) from the passenger's air mix control motor. Remove the self-tapping screws and the passenger's air mix control motor from the heater unit.

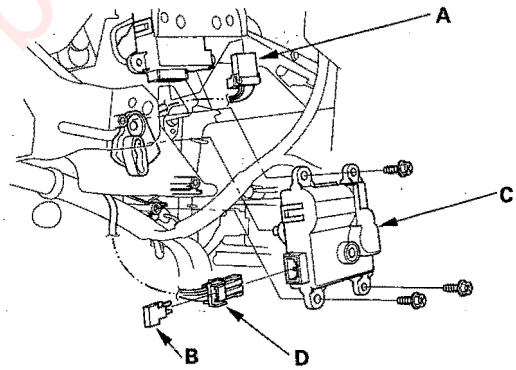

6. Install the motor in the reverse order of removal. Make sure the pin on the motor is properly engaged with the linkage. After installation, make sure the motor runs smoothly.

Protected by R

Driver's Mode Control Motor Test

NOTE: Before testing, check for HVAC DTCs (see page 21-8).

1. Disconnect the 10P connector from the driver's mode control motor.

   NOTICE
   Incorrectly applying power and ground to the driver's mode control motor will damage it. Follow the instructions carefully.

2. Connect battery power to the No. 2 terminal of the driver's mode control motor, and ground the No. 1 terminal; the driver's mode control motor should run smoothly, and stop at Vent. If it doesn't, reverse the connections; the driver's mode control motor should run smoothly, and stop at Defrost. When the driver's mode control motor stops running, disconnect battery power immediately.

DRIVER'S MODE CONTROL MOTOR

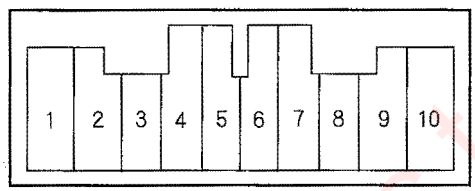

3. If the driver's mode control motor did not run in step 2, remove it, then check the driver's mode control linkage and doors for smooth movement.

   - If the linkage and doors move smoothly, replace the driver's mode control motor (see page 21-70).
   - If the linkage or doors stick or bind, repair them as needed.
   - If the driver's mode control motor runs smoothly, go to step 4.

4. Use a digital multimeter with an output of 1 mA or less at the 20 kΩ range. With the driver's mode control motor running as in step 2, check for continuity between the No. 6, 7, 8 and 9 terminals and the No. 10 terminal individually. There should be continuity for a moment at each terminal as the motor moves past the switch's terminal.

5. If there is no continuity for a moment at each terminal, replace the driver's mode control motor (see page 21-70).

Driver's Mode Control Motor Replacement

1. Remove the driver's dashboard under cover (see page 20-83)

2. Disconnect the 10P connector (A) from the driver's mode control motor (B). Remove the self-tapping screws and the driver's mode control motor from the heater unit.

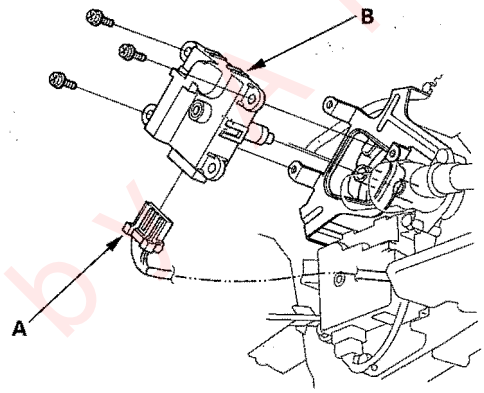

3. Install the motor in the reverse order of removal. After installation, make sure the motor runs smoothly.

Scanned by

Passenger's Mode Control Motor Test

NOTE: Before testing, check for HVAC DTCs (see page 21-8).

1. Disconnect the 10P connector from the passenger's mode control motor.

   NOTICE
   Incorrectly applying power and ground to the passenger's mode control motor will damage it. Follow the instructions carefully.

2. Connect battery power to the No. 2 terminal of the passenger's mode control motor, and ground the No. 1 terminal; the passenger's mode control motor should run smoothly, and stop at Vent. If it doesn't, reverse the connections; the passenger's mode control motor should run smoothly, and stop at Defrost. When the passenger's mode control motor stops running, disconnect battery power immediately.

PASSENGER'S MODE CONTROL MOTOR

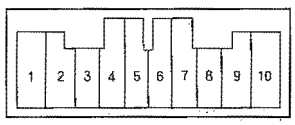

3. If the passenger's mode control motor did not run in step 2, remove it, then check the passenger's mode control linkage and doors for smooth movement.

   - If the linkage and doors move smoothly, replace the passenger's mode control motor (see page 21-71).
   - If the linkage or doors stick or bind, repair them as needed.
   - If the passenger's mode control motor runs smoothly, go to step 4.

4. Use a digital multimeter with an output of 1 mA or less at the 20 kΩ range. With the passenger's mode control motor running as in step 2, check for continuity between the No. 6, 7, 8 and 9 terminals and the No. 10 terminal individually. There should be continuity for a moment at each terminal as the motor moves past the switch's terminal.

5. If there is no continuity for a moment at each terminal, replace the passenger's mode control motor (see page 21-71).

Passenger's Mode Control Motor Replacement

1. Turn the ignition switch OFF.
2. Set the passenger's mode to VENT.
3. Remove the glove box housing (see page 20-85).
4. Remove the throttle actuator control module (see page 11-216).
5. Remove the climate control unit (see page 21-73).
6. Disconnect the 10P connector (A) from the passenger's mode control motor (B). Remove the self-tapping screws and the passenger's mode control motor from the heater unit.

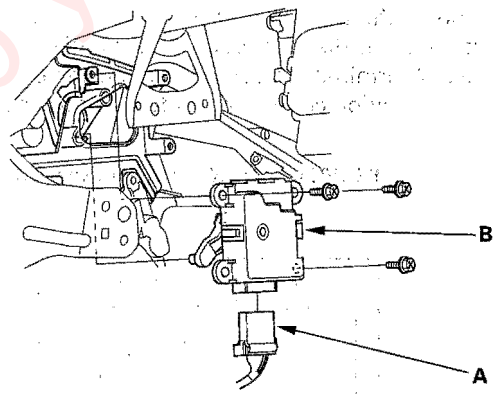

7. Install the motor in the reverse order of removal. After installation, make sure the motor runs smoothly.

Protected by A R

Recirculation Control Motor Test

NOTE: Before testing, check for HVAC DTCs (see page 21-8).

1. Disconnect the 5P connector from the recirculation control motor.

   NOTICE
   Incorrectly applying power and ground to the recirculation control motor will damage it. Follow the instructions carefully.

2. Connect battery power to the No. 5 terminal of the recirculation control motor, and ground the No. 1 and No. 2 terminals; the recirculation control motor should run smoothly. To avoid damaging the recirculation control motor, do not reverse power and ground. Disconnect the No. 1 or No. 2 terminals from ground; the recirculation control motor should stop at Fresh (when the No. 1 terminal is disconnected) or Recirculate (when the No. 2 terminal is disconnected). Don't cycle the recirculation control motor for a long time.

RECIRCULATION CONTROL MOTOR

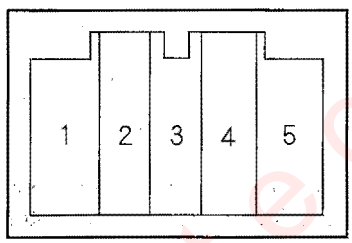

3. If the recirculation control motor did not run in step 2, remove it, then check the recirculation control linkage and doors for smooth movement.

   - If the linkage and doors move smoothly, replace the recirculation control motor (see page 21-72).
   - If the linkage or doors stick or bind, repair them as needed.

Recirculation Control Motor Replacement

1. Turn the ignition switch OFF.
2. Remove the glove box housing (see page 20-85).
3. Remove the throttle actuator control module (see page 11-216).
4. Disconnect the 5P connector (A) from the recirculation control motor (B). Remove the self-tapping screws and the recirculation control motor from the blower unit.

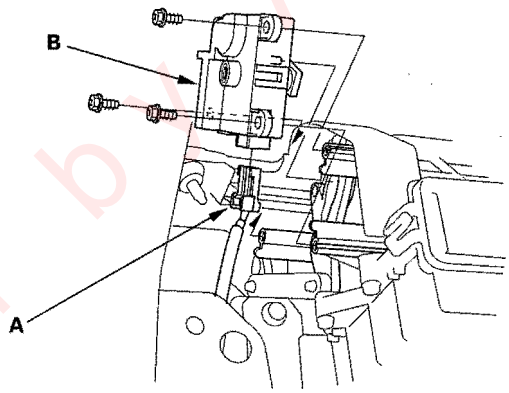

5. Install the motor in the reverse order of removal. Make sure the pin on the motor is properly engaged with the linkage. After installation, make sure the motor runs smoothly.

Protected by AR

Climate Control Switch Assembly Removal and Installation

1. Remove the audio-HVAC display module assembly (see page 22-437).
2. Remove the self-tapping screws and the audio unit (A) and bracket (B) from the display panel control unit (C).

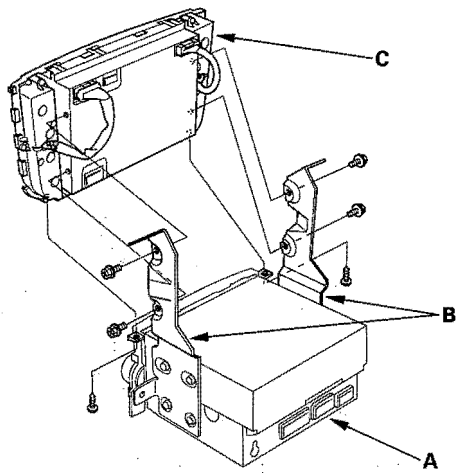

3. Disconnect 10P connector (A) and 16P connector (B) from the display panel control unit (C). Remove the self-tapping screws and the climate control switch assembly (D).

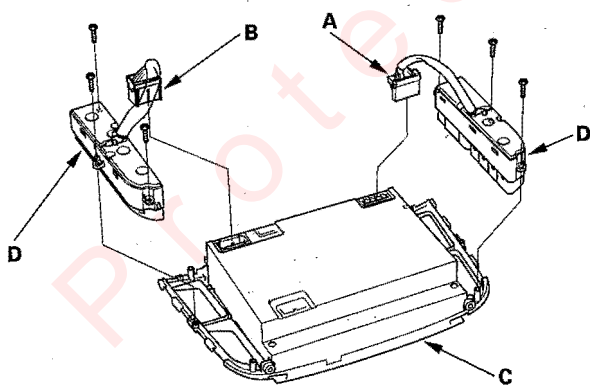

4. Install the control switch assembly in the reverse order of removal. After installation, operate the control switch assembly controls to see whether it works properly.
5. Run the self-diagnostic function to confirm that there are no problems in the system (see page 21-9).

Climate Control Unit Removal and Installation

1. Turn the ignition switch OFF.
2. Remove the glove box housing (see page 20-85).
3. Remove the throttle actuator control module (see page 11-216).
4. Disconnect the connectors (A) from the climate control unit (B), then remove the wire harness clip (C), the self-tapping screws and the climate control unit.

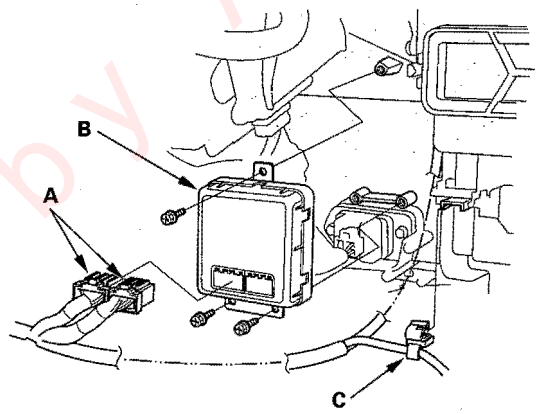

5. Install the control unit in the reverse order of removal. After installation, operate the control switch assembly controls to see whether it works properly.
6. Run the self-diagnostic function to confirm that there are no problems in the system (see page 21-9).

Protected by AR

Dust and Pollen Filter Replacement

The dust and pollen filter should be replaced every 30,000 miles (48,000 km) or 24 months whichever comes first. Replace the filter more often if the airflow is less than usual, or if the vehicle is driven in areas that have high concentrations of soot from industry or diesel powered vehicles.

1. Remove the glove box housing. (see page 20-85).
2. Remove the dust and pollen filter assembly from the evaporator.

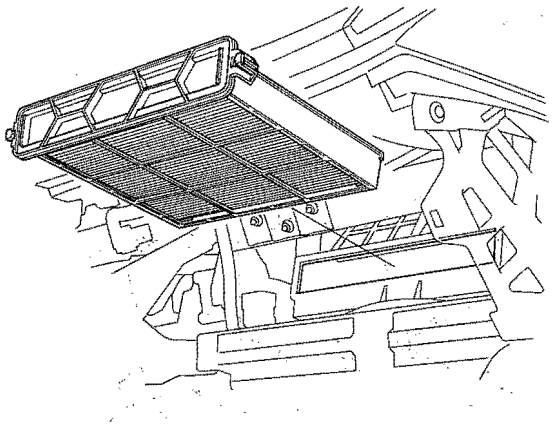

3. Remove the filter (A) from the housing (B), and replace the filter.

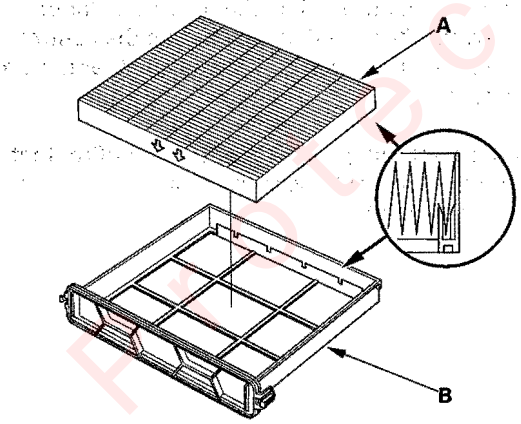

4. Install the filter in the reverse order of removal. Make sure that there is no air leaking out of the evaporator.

Blower Unit Removal and Installation

1. Remove the glove box housing (see page 20-85).
2. Remove the relays (A) and the wire harness clips (B), then remove the bolts and the glove box frame (C). Remove the self tapping screws, and the glove box striker (D).

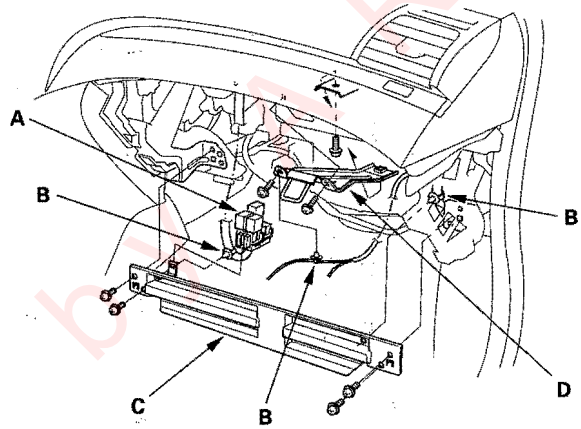

3. Disconnect the connectors (A) from the blower motor, and the recirculation control motor, then remove the wire harness clip (B) and the connector clip (C). Remove the mounting nuts, the mounting bolts and the blower unit (D).

   NOTE: One of the upper nuts is hidden behind the sound insulation. Look for a cut-out in the sound insulation.

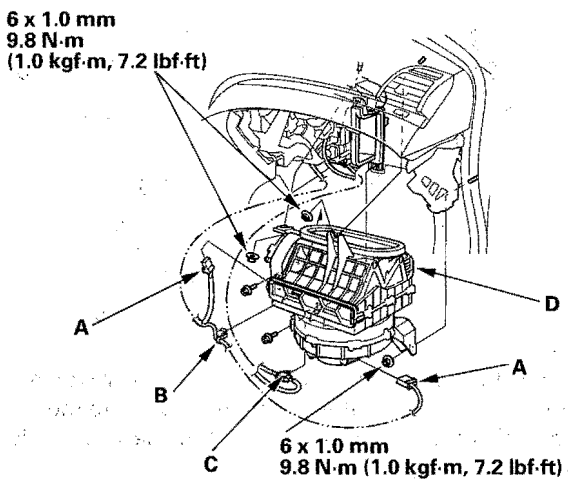

4. Install the unit in the reverse order of removal. Make sure that there is no air leakage.

Blower Unit Component Replacement

Note these items when overhauling the blower unit:

- The recirculation control motor (A), blower motor cooling hose (B), blower motor cover (C), the blower motor (D), and the dust and pollen filter (E) can be replaced without removing the blower unit.
- Before reassembly, make sure that the recirculation control linkage and doors move smoothly without binding.
- After reassembly, make sure the recirculation control motor runs smoothly (see page 21-72).

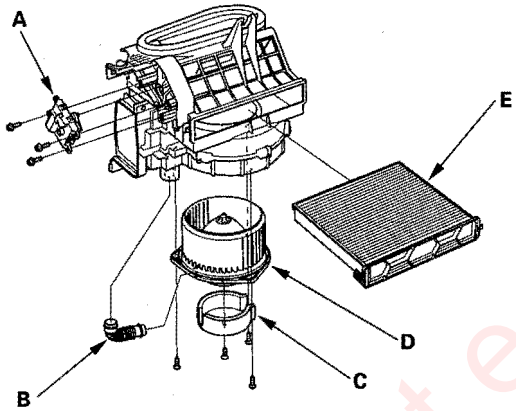

Evaporator Core Replacement

1. Recover the refrigerant with a recovery/recycling/charging station (see page 21-88).
2. Remove the bolt, then disconnect the suction line (A) and the receiver line (B) from the evaporator core.

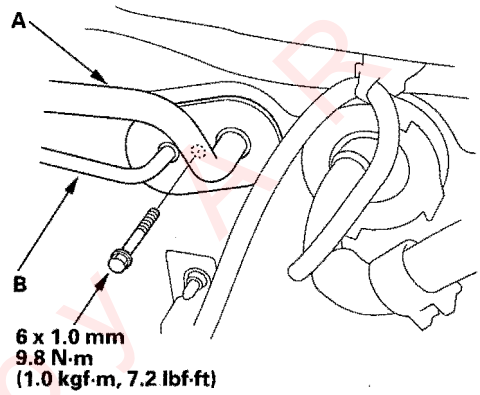

3. Remove the blower unit (see page 21-74).
4. Remove the throttle actuator control module (see page 11-216).
5. Remove the climate control unit (see page 21-73).
6. Disconnect the connector (A) from the power transistor, then remove the wire harness clip (B) the self-tapping screws, and the expansion valve cover (C).

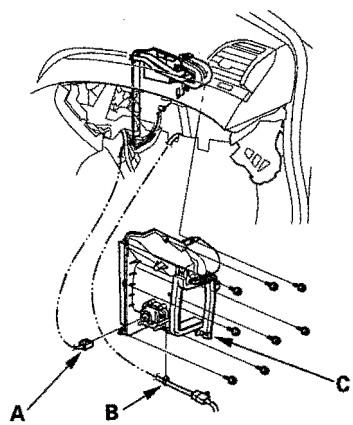

(cont'd)

Protected by ARP

Evaporator Core Replacement (cont'd)

7. Carefully pull out the evaporator core without bending the pipes.

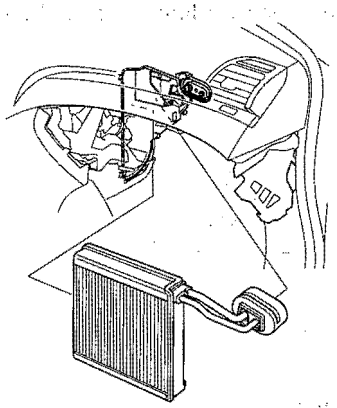

8. Install the core in the reverse order of removal, and note these items.

- If you're installing a new evaporator core, add refrigerant oil (DENSO ND-OIL 8) (see page 21-6).
- Replace the O-rings with new ones at each fitting, and apply a thin coat of refrigerant oil before installing them. Be sure to use the correct O-rings for HFC-134a (R-134a) to avoid leakage.
- Immediately after using the oil, reinstall the cap on the container, and seal it to avoid moisture absorption.
- Do not spill the refrigerant oil on the vehicle; it may damage the paint; if the refrigerant oil contacts the paint, wash it off immediately.
- Make sure that there is no air leakage.
- Charge the system (see page 21-90).

Heater Unit/Core Replacement

SRS components are located in this area. Review the SRS component locations (see page 23-11), and the precautions and procedures (see page 23-13) before performing repairs or service.

1. Make sure you have the anti-theft codes for the radio and the navigation system, then write down the XM radio channel presets.
2. Make sure the ignition is OFF, then disconnect the negative cable from the battery.
3. Disconnect the suction and receiver lines from the evaporator core (see page 21-75)
4. From under the hood, open the cable clamp (A), then disconnect the heater valve cable (B) from the heater valve arm (C). Turn the heater valve arm to the fully opened position as shown.

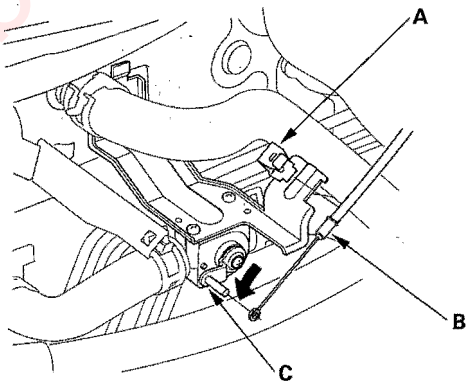

5. When the engine is cool, drain the engine coolant from the radiator (see page 10-6).

Protected by AR

6. Slide the hose clamps (A) back. Remove the bolt and water valve bracket, then disconnect the inlet heater hose (B) and the outlet heater hose (C) from the heater unit. Engine coolant will run out when the hoses are disconnected; drain it into a clean drip pan. Be sure not to let coolant spill on the electrical parts or the painted surfaces. If any coolant spills, rinse it off immediately.

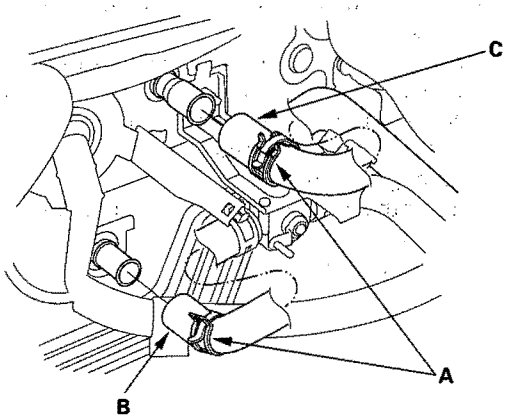

7. Remove the mounting nut from the heater unit. Take care not to damage or bend the fuel lines and the brake lines, etc.

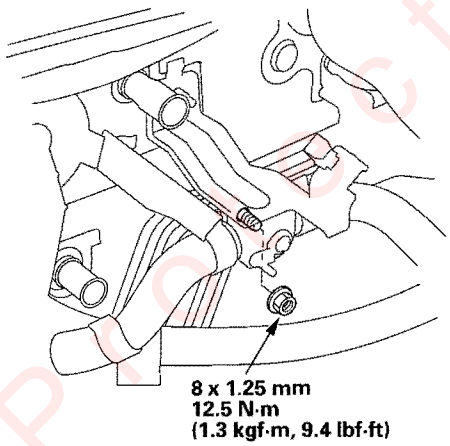

8. Remove the dashboard (see page 20-89).

9. Disconnect the connectors (A) from the driver's mode control motor, the driver's air mix control motor, the evaporator temperature sensor, the power transistor, the passenger's mode control motor, passenger's air mix control motor, and the recirculation control motor, then remove the wire harness clips (B), the wire harness (C), and the carpet clip (D).

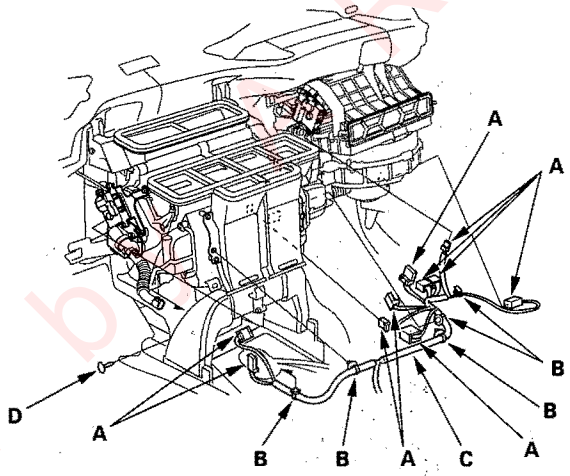

10. Remove the heater ducts (A). then remove the mounting nuts and the blower-heater unit (B).

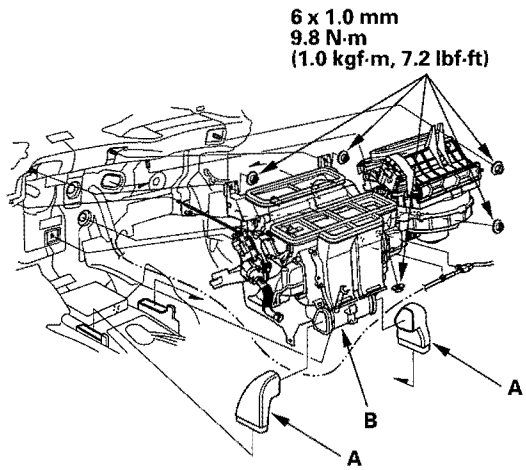

(cont'd)

Protected by

Heater Unit/Core Replacement (cont'd)

11. Remove the self-tapping screws, the evaporator temperature sensor (A) and the joint duct (B). Remove the self-tapping screws, then remove the passenger's heater outlet (C), and the heater core cover (D). Remove the self-tapping screws and the passenger's air mix control motor (E). Remove the self-tapping screws, the heater pipe brackets (F), the grommets (G) and carefully pull out the heater core (H) so you don't bend the inlet and outlet pipes.

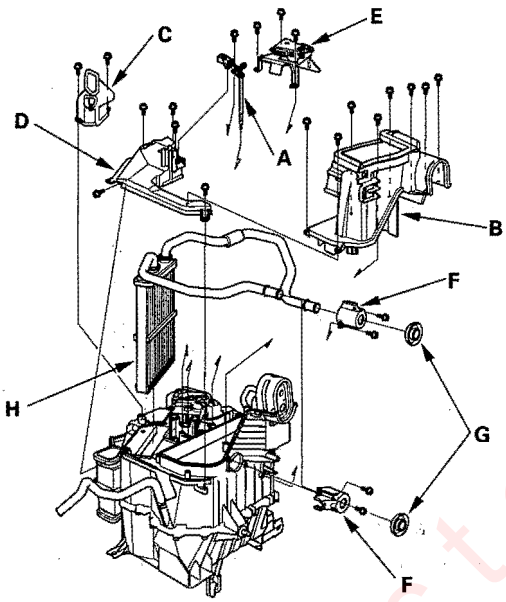

12. Install the heater core and the evaporator core in the reverse order of removal.

13. Install the heater unit in the reverse order of removal, and note these items:

    - Do not interchange the inlet and outlet heater hoses, and install the hose clamps securely.
    - Refill the cooling system with engine coolant (see page 10-6).
    - Adjust the heater valve cable (see page 21-79).
    - Make sure that there is no coolant leakage.
    - Make sure that there is no air leakage.
    - Refer to evaporator core replacement (see step 8 on page 21-76).
    - Enter the anti-theft codes for the radio and the navigation system, then enter the customer's XM radio channel presets.

Protected by A-R

Heater Valve Cable Adjustment

1. From under the hood, open the cable clamp (A), then disconnect the heater valve cable (B) from the heater valve arm (C).

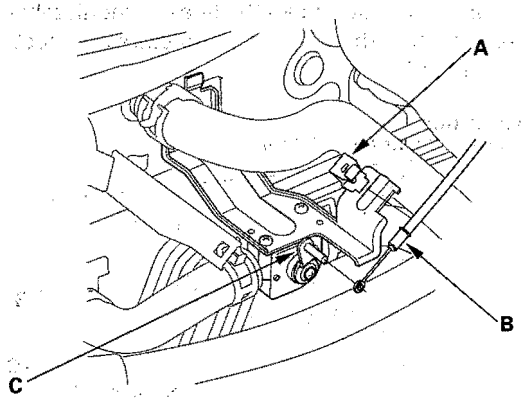

2. From under the dash, disconnect the heater valve cable housing from the cable clamp (A), and disconnect the heater valve cable (B) from the air mix control linkage (C).

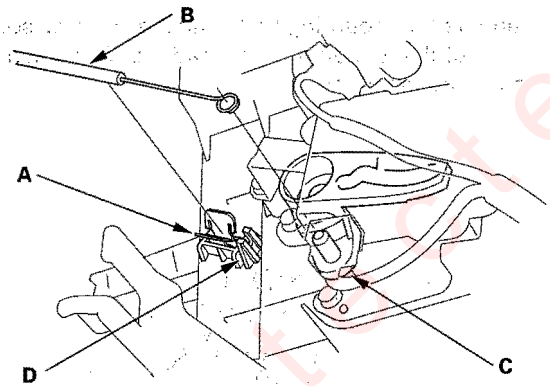

3. Set the temperature control dial to Max Cool (Lo) with the ignition switch ON (II).

4. Attach the heater valve cable (B) to the air mix control linkage (C) as shown step 2. Hold the end of the heater valve cable housing against the stop (D), then snap the heater valve cable housing into the cable clamp (A).

   NOTE: Make sure the ring-end of the cable is pushed all the way to the base of the pin on air mix control linkage.

5. From under the hood, turn the heater valve arm (C) to the fully closed position as shown, and hold it. Attach the heater valve cable (B) to the heater valve arm, and gently pull on the heater valve cable housing to take up any slack, then install the heater valve cable housing into the cable clamp (A).

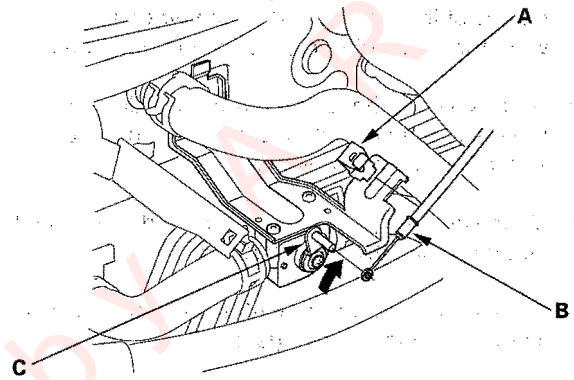

Protected by MR

Compressor Replacement

NOTE: Do not install a compressor into a system unless you are completely sure that the system is free of contamination. Installing a compressor into a contaminated system can result in premature compressor failure.

1. If the compressor is marginally operable, run the engine at idle speed, and let the air conditioning work for a few minutes, then shut the engine off.
2. Make sure you have the anti-theft codes for the radio and the navigation system, then write down XM radio channel presets.
3. Make sure the ignition is OFF, then disconnect the negative cable from the battery.
4. Recover the refrigerant with a recovery/recycling/charging station (see page 21-88).
5. Remove the intake manifold cover (see step 1 on page 4-19), and the alternator (see page 4-32).
6. Remove the compressor clutch connector (A) from the condenser fan shroud (B). Disconnect the condenser fan connector (C), then remove the wire harness clip (D) from the condenser fan shroud. Remove the hose (E) from the radiator (F). Loosen the lower mounting bolt, then remove the upper mounting bolts and the radiator fan shroud. Be careful not to damage the radiator fins when removing the condenser fan shroud.

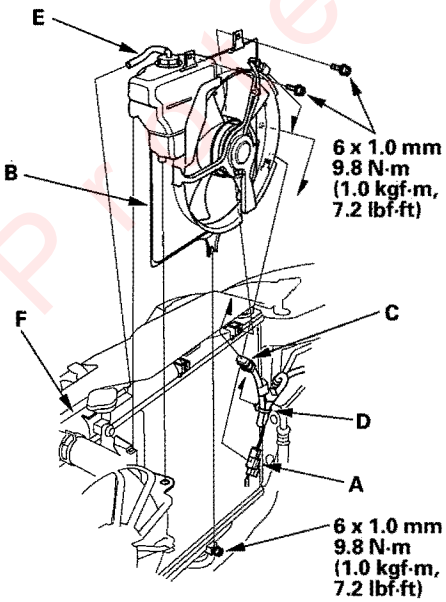

7. Disconnect the compressor clutch connector (A). Remove the bolt and the nuts, then disconnect the suction line (B) and discharge line (C) from the compressor. Plug or cap the lines immediately after disconnecting them to avoid moisture and dust contamination.

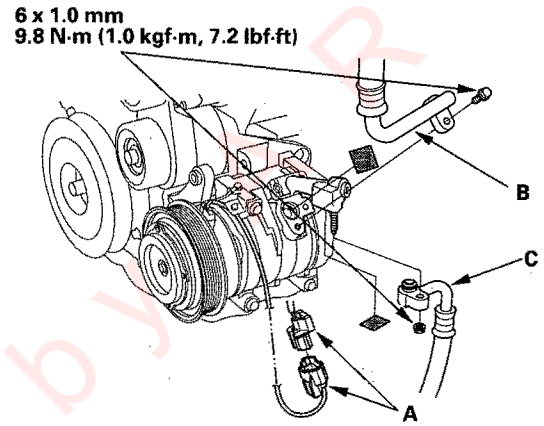

8. Remove the mounting bolts and the compressor. Be careful not to damage the radiator fins when removing the compressor.

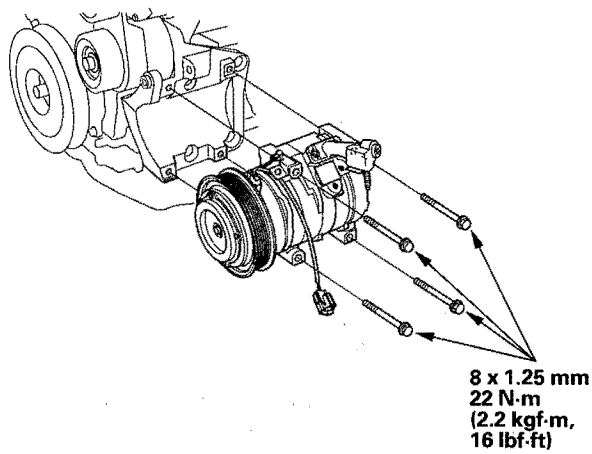

Presented by K

9. Install the compressor in the reverse order of removal, and note these items:

   - Inspect the A/C lines for any signs of contamination. Purge the system if necessary before installing the compressor.
   - If you're installing a new compressor, you must calculate the amount of refrigerant oil to be removed from it (see page 21-6). A new compressor comes with a full charge of oil.
   - Replace the O-rings with new ones at each fitting, and apply a thin coat of refrigerant oil before installing them. Be sure to use the correct O-rings for HFC-134a (R-134a) to avoid leakage.
   - Use refrigerant oil (DENSO ND-OIL 8) for HGC-134a DENSO piston type compressor only.
   - To avoid contamination, do not return the oil to the container once dispensed, and never mix it with other refrigerant oils.
   - Immediately after using the oil, reinstall the cap on the container, and seal it to avoid moisture absorption.
   - Do not spill the refrigerant oil on the vehicle; it may damage the paint; if the refrigerant oil contacts the paint, wash it off immediately.
   - Be careful not to damage the radiator fins when installing the compressor and the condenser fan shroud.
   - Charge the system (see page 21-90).
   - Enter the anti-theft codes for the radio and the navigation system, then enter the customer's XM radio channel presets.

Protected by AR

Compressor Clutch Check

1. Check the pressure plate for discoloration, peeling, or other damage. If there is damage, replace the clutch set (see page 21-83).

2. Check the pulley bearing play and drag by rotating the pulley by hand. Replace the clutch set with a new one if it is noisy or has excessive play/drag (see page 21-83).

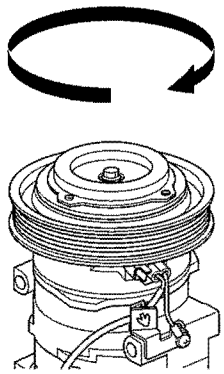

3. Measure the clearance between the rotor pulley (A) and the pressure plate (B) all the way around. If the clearance is not within specified limits, remove the pressure plate (see page 21-83) and add or remove shims as needed to increase or decrease clearance.

   Clearance: 0.3—0.55 mm (0.012—0.023 in.)

   NOTE: The shims are available in three thicknesses: 0.1 mm, 0.3 mm and 0.5 mm.

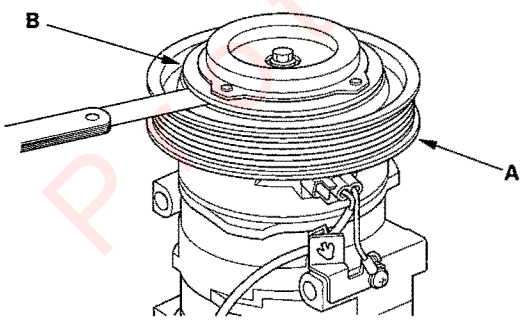

4. Check resistance of the field coil. If resistance is not within specifications, replace the field coil (see page 21-83).

   Field Coil Resistance: 3.9—4.3 ohms at 68°F (20°C)

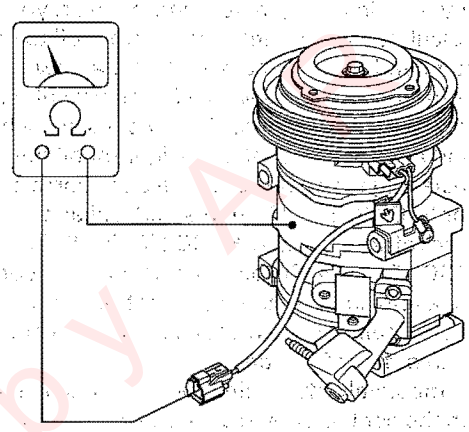

Protected by A

Compressor Clutch Overhaul

Special Tools Required
A/C clutch holder, Robinair 10204 or Kent-Moore J37872, or Honda Tool and Equipment KMT-J33939, commercially available

1. Remove the center bolt (A) while holding the pressure plate with a commercially available A/C clutch holder (B).

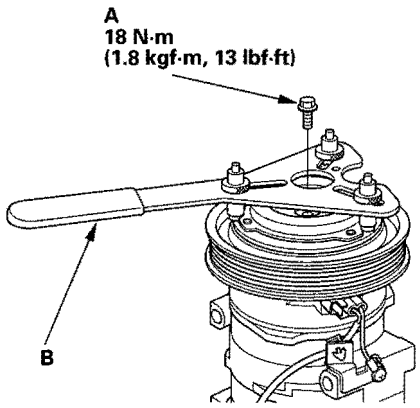

2. Remove the pressure plate (A) and shim(s) (B), taking care not to lose the shim(s). If the clutch needs adjustment, increase or decrease the number and thickness of shims as necessary, then reinstall the pressure plate, and recheck its clearance (see page 21-82).

   NOTE: The shims are available in three thicknesses: 0.1 mm, 0.3 mm and 0.5mm.

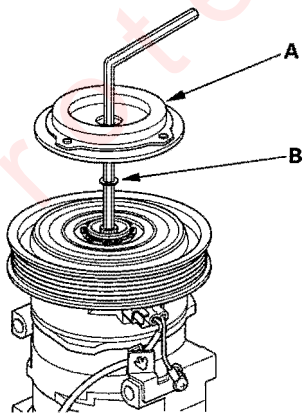

3. If you are replacing the field coil, remove the snap ring (A) with snap ring pliers, then remove the pulley (B). Be careful not to damage the pulley or the compressor.

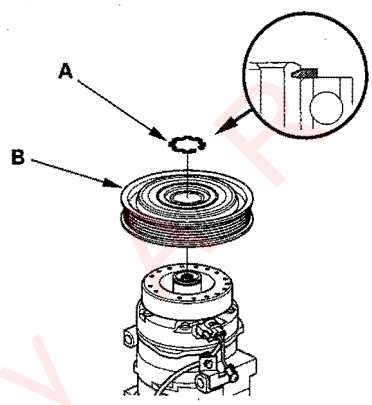

4. Remove the screw from the field coil ground terminal (A), then remove the wire harness (B) and the bracket (C). Disconnect the field coil connector (D). Remove the snap ring (E) with snap ring pliers, then remove the field coil (F). Be careful not to damage the field coil or the compressor.

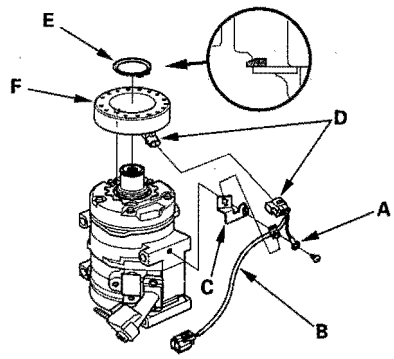

5. Reassemble the clutch in the reverse order of disassembly, and note these items:

   - Install the field coil with the wire side facing down, and align the boss on the field coil with the hole in the compressor.
   - Clean the pulley and compressor sliding surfaces with contact cleaner or other non-petroleum solvent.
   - Install new snap rings, note the installation direction, and make sure they are fully seated in the groove.
   - Make sure that the pulley turns smoothly after it's reassembled.
   - Route and clamp the wires properly or they can be damaged by the pulley.

Protected by

Compressor Relief Valve Replacement

1. Recover the refrigerant with a recovery/recycling/charging station (see page 21-88).
2. Remove the relief valve (A) and the O-ring (B). Plug the opening to keep foreign matter from entering the system and the compressor oil from running out.

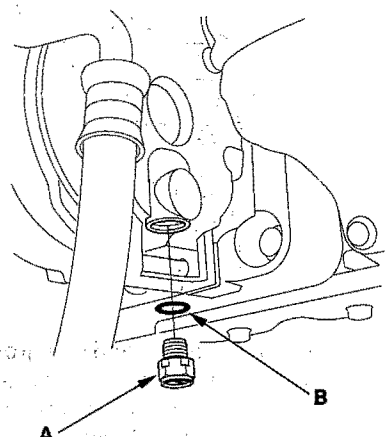

3. Clean the mating surfaces.
4. Replace the O-ring with a new one at the relief valve, and apply a thin coat of refrigerant oil before installing it.
5. Remove the plug, and install and tighten the relief valve.
6. Charge the system (see page 21-90).

Protected by AR

Condenser Replacement

1. Make sure you have the anti-theft code for the radio and the navigation system, then wire down the XM radio channel presets.
2. Recover the refrigerant with a recovery/recycling charging station (see page 21-88).
3. Remove the front bulkhead cover (see page 20-130).
4. Make sure the ignition is OFF, then remove the battery and the battery box.
5. Remove the clips (A), then remove the air intake cover (B).

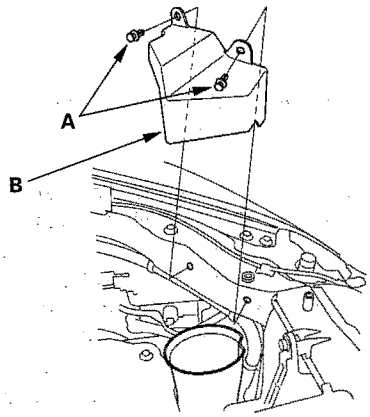

6. Remove the bolts and the radiator upper mount brackets.

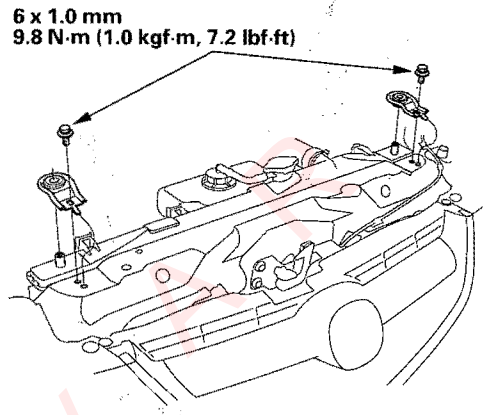

7. Remove the bolt, then disconnect the receiver line (A) from the condenser. Disconnect the A/C pressure switch connector (B).

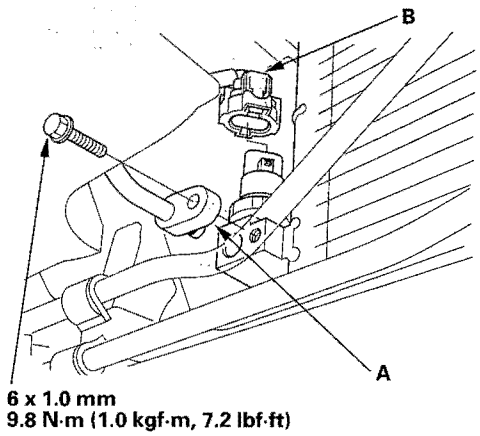

(cont'd)

Protected by ...

Condenser Replacement (cont'd)

8. Remove the bolts from the condenser.

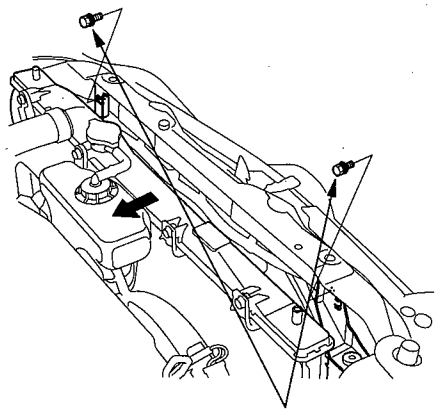

9. Remove the bolt, then disconnect the discharge line from the condenser.

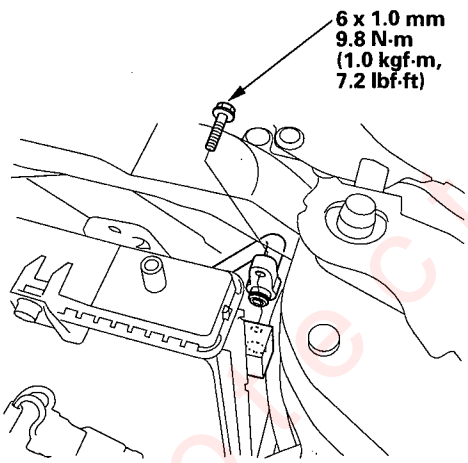

10. Remove the condenser by lifting it up. Be careful not to damage the radiator and condenser fins when removing the condenser.

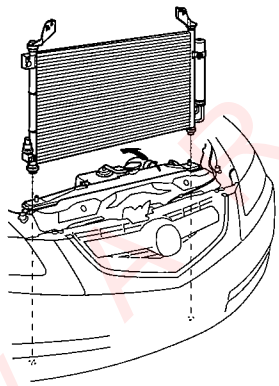

11. Install the condenser in the reverse order of removal, and note these items.

- If you're installing a new condenser, add refrigerant oil (DENSO ND-OIL 8) (see page 21-6).
- Replace the O-rings with new ones at each fitting, and apply a thin coat of refrigerant oil before installing them. Be sure to use the correct O-rings for HFC-134a (R-134a) to avoid leakage.
- Immediately after using the oil, reinstall the cap on the container, and seal it to avoid moisture absorption.
- Do not spill the refrigerant oil on the vehicle; it may damage the paint; if the refrigerant oil contacts the paint, wash it off immediately.
- Charge the system (see page 21-90).
- Enter the anti-theft codes for the radio and the navigation system, then enter the customer's XM radio channel presets.

Protected by AIR

Receiver/Dryer Desiccant Replacement

NOTE: Install the Receiver/Dryer as quickly as possible to preset the system from absorbing moisture from the air.

1. Remove the condenser (see page 21-85).

2. Remove the bolts from the condenser, then remove the receiver/dryer (A), the bracket (B) and the O-rings (C).

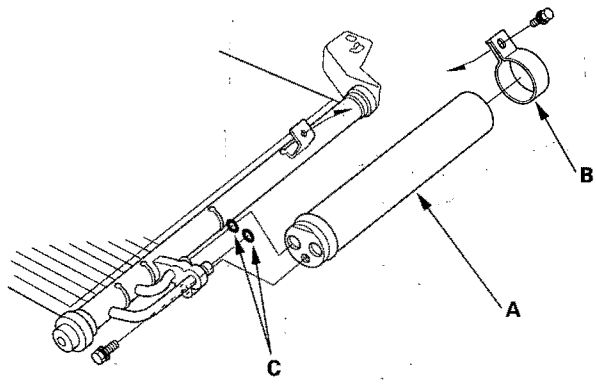

3. Install the receiver/dryer in the reverse order of removal, and note these items:

   Replace the O-rings with new ones, and apply a thin coat of refrigerant oil (DENSO ND-OIL 8) before installing them. Be sure to use the correct O-rings for HFC-134a (R-134a) to avoid leakage.

Protected by A R

Refrigerant Recovery

⚠CAUTION

- Air conditioning refrigerant or lubricant vapor can irritate your eyes, nose, or throat.
- Be careful when connecting service equipment.
- Do not breathe refrigerant or vapor.

If accidental system discharge occurs, ventilate work area before resuming service.

Additional health and safety information may be obtained from the refrigerant and lubricant manufacturers.

1. Connect a R-134a refrigerant recovery/recycling/charging station (A) to the high-pressure service port (B) and the low-pressure service port (C), as shown, following the equipment manufacturer's instructions.

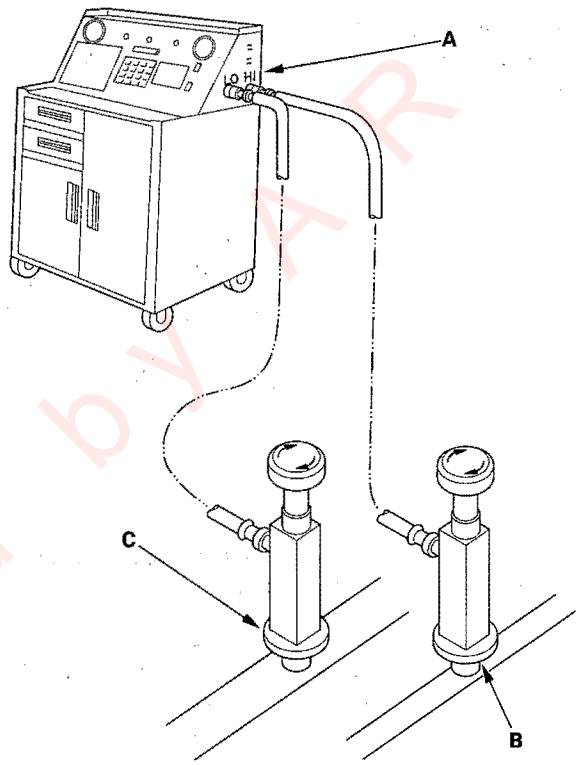

2. Measure the amount of refrigerant oil removed from the A/C system after the recovery process is completed. Be sure to put the same amount of new refrigerant oil back into the A/C system before charging.

Protected by AR

System Evacuation

⚠CAUTION

- Air conditioning refrigerant or lubricant vapor can irritate your eyes, nose, or throat.
- Be careful when connecting service equipment.
- Do not breathe refrigerant or vapor.

If accidental system discharge occurs, ventilate work area before resuming service.

Additional health and safety information may be obtained from the refrigerant and lubricant manufacturers.

1. When an A/C System has been opened to the atmosphere, such as during installation or repair, it must be evacuated using a R-134a refrigerant recovery/recycling/charging station. (If the system has been open for several days, the receiver/dryer should be replaced, and the system should be evacuated for several hours.)

2. Connect a R-134a refrigerant recovery/recycling/charging station (A) to the high-pressure service port (B) and the low-pressure service port (C), as shown, following the equipment manufacturer's instructions. Evacuate the system.

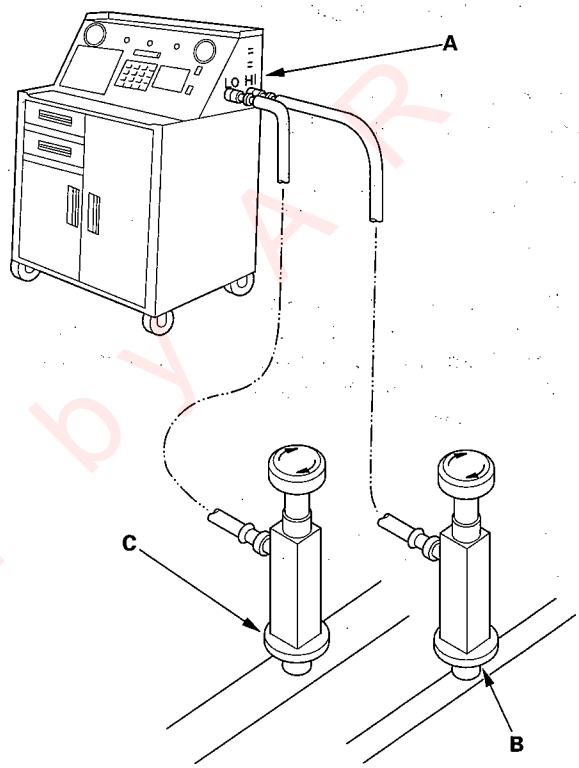

3. If the low-pressure does not reach more than 93.3 kPa (700 mmHg, 27.6 in.Hg) in 15 minutes, there is probably a leak in the system. Partially charge the system, and check for leaks (see step 3 on page 21-91).

Protected by AR

System Charging

⚠CAUTION

- Air conditioning refrigerant or lubricant vapor can irritate your eyes, nose, or throat.
- Be careful when connecting service equipment.
- Do not breathe refrigerant or vapor.

If accidental system discharge occurs, ventilate work area before resuming service.

Additional health and safety information may be obtained from the refrigerant and lubricant manufacturers.

1. Connect a R-134a refrigerant recovery/recycling/charging station (A) to the high-pressure service port (B) and the low-pressure service port (C), as shown, following the equipment manufacturer's instructions.

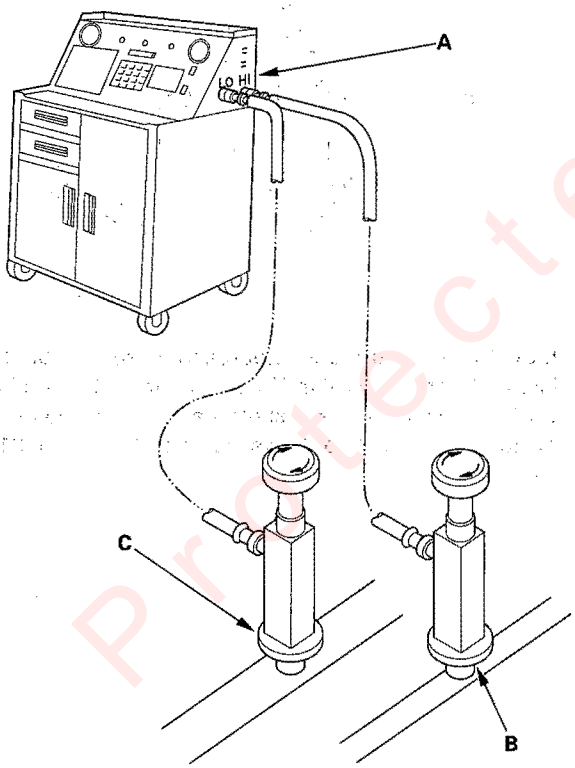

2. Evacuate the system (see page 21-89).
3. Add the same amount of new refrigerant oil to the system that was removed during recovery. Use only DENSO ND-OIL 8 refrigerant oil.
4. Charge the system with the specified amount of R-134a refrigerant. Do not overcharge the system; the compressor will be damaged.

   Select the appropriate units of measure for your refrigerant charging station.

   Refrigerant capacity:
   500 to 550 g
   0.50 to 0.55 kg
   1.1 to 1.2 lbs
   17.6 to 19.4 oz
5. Check for refrigerant leaks (see page 21-91).
6. Check for system performance (see page 21-92).

Protected by SAR

Refrigerant Leak Test

Special Tools Required
Leak detector, Honda Tool and Equipment YGK-H-10PM commercially available

⚠CAUTION

- Air conditioning refrigerant or lubricant vapor can irritate your eyes, nose, or throat.
- Be careful when connecting service equipment.
- Do not breathe refrigerant or vapor.

NOTE:
- If accidental system discharge occurs, ventilate work area before resuming service.
- Additional health and safety information may be obtained from the refrigerant and lubricant manufacturers.

1. Connect a R-134a refrigerant recovery/recycling/charging station (A) to the high-pressure service port (B) and the low-pressure service port (C), as shown, following the equipment manufacturer's instructions.

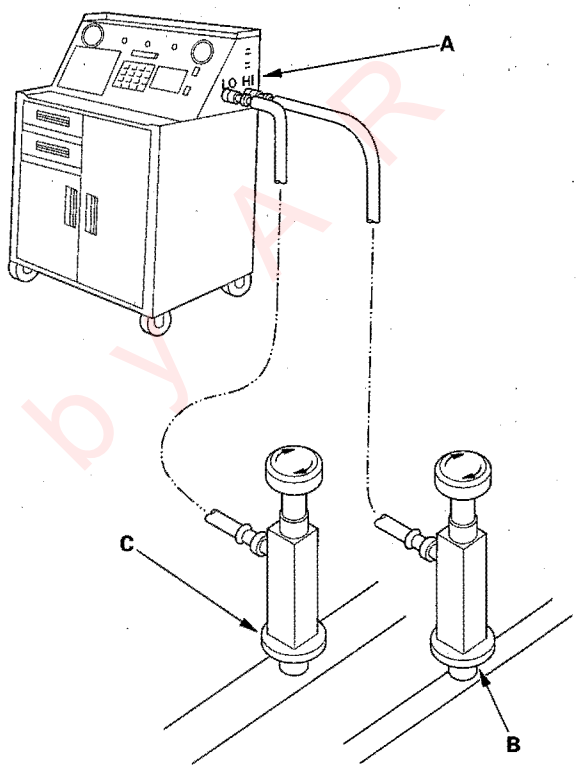

2. Open high pressure valve to charge the system to the specified capacity, then close the supply valve, and disconnect the charging station fittings.

   Select the appropriate units of measure for your refrigerant charging station.

   Refrigerant capacity:
   500 to 550 g
   0.50 to 0.55 kg
   1.1 to 1.2 lbs
   17.6 to 19.4 oz

3. Check the system for leaks using a R-134a refrigerant leak detector with an accuracy of 14 g (0.5 oz) per year or better.

4. If you find leaks that require the system to be opened (to repair or replace hoses, fittings, etc.), recover the system.

5. After checking and repairing leaks, the system must be evacuated.

Protected by AR

A/C System Test

Performance Test

⚠CAUTION

- Air conditioning refrigerant or lubricant vapor can irritate your eyes, nose, or throat.
- Be careful when connecting service equipment.
- Do not breathe refrigerant or vapor.

The performance test will help determine if the air conditioner system is operating within specifications.

NOTE:
- If accidental system discharge occurs, ventilate work area before resuming service.
- Additional health and safety information may be obtained from the refrigerant and lubricant manufacturers.

1. Connect a R-134a refrigerant recovery/recycling/charging station to the high-pressure service port and the low-pressure service port, following the equipment manufacturer's instructions.

2. Determine the relative humidity and air temperature.

3. Remove the glove box housing. (see page 20-85).

4. Insert a thermometer (A) in the center vent.

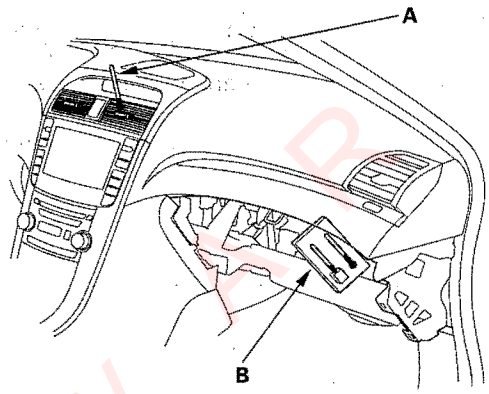

5. Place a thermometer (B) near the blower unit's recirculation inlet duct.

6. Test conditions:
   - Avoid direct sunlight.
   - Open hood.
   - Open front doors.
   - Set the temperature control dial to LO and turn off the dual mode.
   - Run the engine at 1,500 rpm.
   - No driver or passengers in vehicle.

7. After running the air conditioning for 10 minutes under the above test conditions, read the delivery temperature from the thermometer in the center vent, the intake temperature near the blower unit, and the discharge (high) and suction (low) pressures on the A/C gauges.

Protected by AR

8. To complete the charts:

- Mark the delivery temperature along the vertical line.
- Mark the intake temperature (ambient air temperature) along the bottom line.
- Draw a line straight up from the air temperature to the humidity.
- Mark a point 10 % above and 10 % below the humidity level.
- From each point, draw a horizontal line across the delivery temperature.
- The delivery temperature should fall between the two lines.
- Complete the low-side pressure test and high-side pressure test in the same way.
- Any measurements outside the line may indicate the need for further inspection.

Example	Intake temperature (dry):	86°F (30°C) Humidity level 70 %
	Intake temperature (wet):	77.9°F (25.5°C)
	Intake pressure:	314 kPa (3.2 kgf/cm²) (45.5 psi)
	Delivery temperature:	63.5°F (17.5°C)
	Delivery pressure:	1304 kPa (13.3 kgf/cm²) (189.2 psi)
Results:	Within normal range	

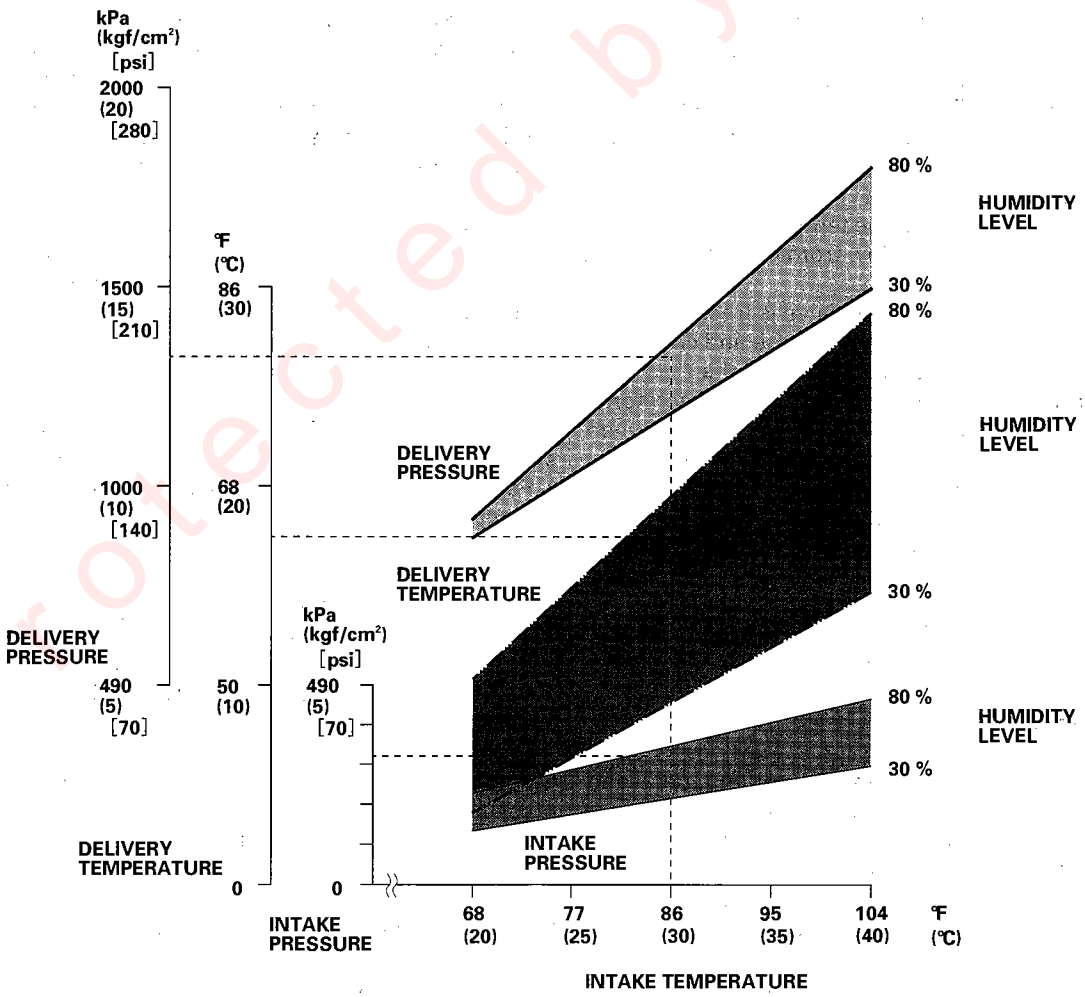

(cont'd)

Protected by AR

A/C System Test (cont'd)

Pressure Test

Test results	Related symptoms	Probable cause	Remedy
Discharge (high) pressure abnormally high	After stopping compressor, pressure drops about 196 kPa (2.0 kgf/cm², 28 psi) quickly, and then falls gradually.	Air in system	Recover, evacuate (see page 21-89), and recharge with specified amount (see page 21-90).
	Reduced or no airflow through condenser.	• Clogged condenser or radiator fins • Condenser or radiator fan not working properly	• Clean. • Check voltage and fan rpm. • Check fan direction.
	Line to condenser is excessively hot.	Restricted flow of refrigerant in system	Restricted lines.
Discharge pressure abnormally low	High and low pressures are balanced soon after stopping compressor. Low side is higher than normal.	• Faulty compressor discharge valve • Faulty compressor seal	Replace the compressor.
	Outlet of expansion valve is not frosted, low-pressure gauge indicates vacuum.	• Faulty expansion valve • Moisture in system	• Replace. • Recover, evacuate, and recharge with specified amount.
Suction (low) pressure abnormally low	Expansion valve is not frosted, and low-pressure line is not cold. Low-pressure gauge indicates vacuum.	• Frozen expansion valve (Moisture in system) • Faulty expansion valve	• Recover, evacuate, and recharge with specified amount. • Replace the expansion valve.
	Discharge temperature is low, and the airflow from vents is restricted.	Frozen evaporator	Run the fan with compressor off, then check evaporator temperature sensor.
	Expansion valve is frosted.	Clogged expansion valve	Clean or replace.
Suction pressure abnormally high	Low-pressure hose and check joint are cooler than the temperature around evaporator.	Expansion valve open too long	Repair or replace.
	Suction pressure is lowered when condenser is cooled by water.	Excessive refrigerant in system	Recover, evacuate, and recharge with specified amount.
	High and low-pressures are equalized as soon as the compressor is stopped, and both gauges fluctuate while running.	• Faulty gasket • Faulty high-pressure valve • Foreign particle stuck in high-pressure valve	Replace the compressor.
Suction and discharge pressures abnormally high	Reduced airflow through condenser.	• Clogged condenser or radiator fins • Condenser or radiator fan not working properly	• Clean. • Check voltage and fan rpm. • Check fan direction.
Suction and discharge pressures abnormally low	Low-pressure hose and metal end areas are cooler than evaporator.	Clogged or kinked low-pressure hose parts	Repair or replace.
	Temperature around expansion valve is too low compared with that around receiver/dryer.	Clogged high-pressure line	Repair or replace.
Refrigerant leaks	Compressor clutch is dirty.	Compressor shaft seal leaking	Replace the compressor.
	Compressor bolt(s) are dirty.	Leaking around bolt(s)	Tighten bolt(s) or replace compressor.
	Compressor gasket is wet with oil.	Gasket leaking	Replace the compressor.

Protected by A.P.

SUPPLEMENTAL RESTRAINT SYSTEM (SRS) (If electrical maintenance required)

The Acura TL SRS includes a driver's airbag in the steering wheel hub, a passenger's airbag in the dashboard above the glove box, seat belt tensioners in the front seat belt retractors, side curtain airbags in the sides of the roof, and side airbags in the front seat-backs. Information necessary to safely service the SRS is included in this Service Manual. Items marked with an asterisk (*) on the contents page include or are located near SRS components. Servicing, disassembling, or replacing these items requires special precautions and tools, and should be done only by an authorized Acura dealer.

- To avoid rendering the SRS inoperative, which could lead to personal injury or death in the event of a severe frontal collision, all SRS service work must be performed by an authorized Acura dealer.
- Improper service procedures, including incorrect removal and installation of the SRS, could lead to personal injury caused by unintentional deployment of the airbags and/or side airbags.
- Do not bump or impact the SRS unit, front impact sensors, side impact sensors whenever the ignition switch is ON (II), or for at least 3 minutes after the ignition switch is turned OFF. Otherwise, the system may fail in a collision, or airbags may deploy.
- SRS electrical connectors are identified by yellow color coding. Related components are located in the steering column, front console, dashboard, dashboard lower panel, in the dashboard above the glove box, in the front seats, in the roof side, and around the floor. Do not use electrical test equipment on these circuits.

Protected by AR

Body Electrical

Body Electrical
Special Tools 22-2
General Troubleshooting Information 22-3

Relay and Control Unit Locations 22-7

Connectors and Harnesses 22-13

Fuse/Relay Boxes 22-64

Power Distribution 22-67

Ground Distribution 22-70

Under-hood Fuse/ Relay Box
Removal and Installation 22-71
DTC Troubleshooting 22-72

Under-dash Fuse/ Relay Box 22-73

Battery 22-74

Relays 22-75

Ignition Switch
Test 22-77

Multiplex Integrated Control System (MICS)
Component Location Index 22-78
General Troubleshooting Information 22-81
DTC Troubleshooting Index 22-83
System Description 22-89
Troubleshooting-B-CAN System Diagnosis Test Mode A 22-108
Troubleshooting-B-CAN System Diagnosis Test Mode B 22-109
Troubleshooting-B-CAN System Diagnosis Test Mode C 22-110
Troubleshooting-B-CAN System Diagnosis Test Mode D 22-111
Troubleshooting-B-CAN System Diagnosis Test Mode 1 22-112
Gauge Control Module DTC Display 22-115
Circuit Diagram 22-116
DTC Troubleshooting 22-118
Multiplex Integrated Control Unit Input Test 22-130
Gauge Control Module Input Test 22-134
Door Multiplex Control Unit Input Test 22-135
Combination Switch Control Unit Input Test 22-136
Relay Control Module Input Test 22-137

Keyless/Security Alarm System
Component Location Index 22-138
System Descriptions 22-140
Circuit Diagram 22-142
DTC Troubleshooting 22-145
Control Unit Input Test 22-150
Keyless Receiver Unit Input Test 22-156
Door Lock Actuator Test ... 22-157
Door Lock Knob Switch Test 22-158
Door Lock Switch Test 22-159
Door Key Cylinder Switch Test 22-159
Security Indicator Test 22-160
Keyless Buzzer Test/Replacement 22-160
Hood Switch Test 22-161
Transmitter Test 22-162
Transmitter Programming 22-163

Horns
Component Location Index 22-164
Circuit Diagram 22-165
Horn Test/Replacement 22-165
Horn Switch Test 22-166

Exterior Lights
Component Location Index 22-167
Circuit Diagram 22-170
DTC Troubleshooting 22-178
Combination Light Switch Test/Replacement 22-182
Headlight Replacement 22-184
Headlight Adjustment 22-185
HID Lamp System Troubleshooting 22-186
HID Bulb Replacement 22-187
HID Unit Replacement 22-188
High/Low Beam Switching Solenoid Test 22-189
Bulb Replacement 22-190
Side Marker Light Replacement 22-191
Brake Pedal Position Switch Test 22-191
Back-up Light Bulb Replacement 22-192
License Plate Light Replacement 22-192
Taillight Replacement 22-193
Taillight/Brake Light LED Replacement 22-194
High Mount Brake Light Replacement 22-194

Turn Signal/Hazard Flasher
Component Location Index 22-195
Circuit Diagram 22-196
Turn Signal/Hazard Relay Input Test 22-198
Hazard Warning Switch Test 22-200

Dash Lights Brightness Controller
Circuit Diagram 22-201
Dash Light Brightness Controller Test/ Replacement 22-202

Interior Lights
Component Location Index 22-203
Circuit Diagram 22-204
Interior Light Switch Test/ Replacement 22-206
Front Individual Map Light Replacement 22-207
Rear Map Light Replacement 22-207
Glove Box Light Test/ Replacement 22-208
Courtesy Light Replacement 22-208
Vanity Mirror Light Switch Test 22-209
Vanity Mirror Light Replacement 22-209
Console Box Light Replacement 22-210
Ambient Light Test 22-210
Trunk Light Test/ Replacement 22-211
Trunk Lid Latch Switch Test 22-211

Entry Light Control System
Component Location Index 22-212
Circuit Diagram 22-213
Control Unit Input Test 22-214
Ignition Key Switch Test ... 22-217
Ignition Key Light Test 22-217

Homelink Remote Control System
Circuit Diagram 22-218
Test 22-218

Power Windows
Component Location Index 22-219
System Description 22-220
Resetting the Power Window Control Unit 22-221
Circuit Diagram 22-223
DTC Troubleshooting 22-226
Master Switch Input Test 22-232
Front Passenger's Power Window Switch Input Test 22-235
Driver's and Front Passenger's Window Motor Test 22-238
Rear Window Motor Test 22-239
Master Switch Replacement 22-239
Passenger's Power Window Switch Test/Replacement 22-240

Not to be copied by ANY

Wipers/Washers
Component Location Index 22-241
Circuit Diagram 22-242
DTC Troubleshooting 22-244
Wiper/Washer Switch Test/Replacement 22-248
Wiper/Washer Switch (Combination Switch Control Unit) Input Test 22-249
Wiper Motor Test 22-250
Washer Motor Test 22-250
Wiper Motor Replacement 22-251
Washer Reservoir Replacement 22-252
Washer Fluid Level Switch Test 22-252
Washer Tube Replacement 22-253

Gauges
Component Location Index 22-254
Circuit Diagram 22-256
Self-diagnostic Function ... 22-262
Gauge Control Module Replacement 22-265
Rewriting the ODO Data on a New Gauge Control Module 22-265
Outside Air Temperature Indicator Calibration 22-266
Select/Reset/Information Switch Test/ Replacement 22-268
DTC Troubleshooting 22-268

Reminder Systems, Key Light Timer, and Engine Oil Pressure Indicator Systems
Circuit Diagram 22-277
Control Unit Input Test 22-278

Rear Window Defogger
Component Location Index 22-281
Circuit Diagram 22-282
Function Test 22-283
Defogger Wire Repair 22-284

Moonroof
Component Location Index 22-285
Moonroof Calibration 22-286
Circuit Diagram 22-287
Moonroof Control Unit Input Test 22-288
Moonroof Switch Test/Replacement 22-290

Accessory Power Sockets
Component Location Index 22-291
Circuit Diagram 22-292
Front Accessory Power Socket Test/Replacement 22-293
Rear Accessory Power Socket Test/Replacement 22-294

Automatic Dimming Inside Mirror
Circuit Diagram 22-295
System Description 22-296
Test/Replacement 22-296

Seat Belt Tension Reducer
Circuit Diagram 22-297
Test 22-298

Trunk Lid Opener
Component Location Index 22-299
Circuit Diagram 22-300
Main Switch Test 22-301
Switch Test 22-301
Trunk Lid Opener Solenoid Test 22-302

Clock
Circuit Diagram 22-303
Replacement 22-304

Power Mirror
Component Location Index 22-305
Power Mirror Switch Test/Replacement 22-307
Power Mirror Actuator Test 22-308
Power Mirror Actuator Replacement 22-309

Seat Heaters
Component Location Index 22-311
Circuit Diagram 22-312
Seat Heater Test 22-313
Switch Test 22-314

Power Lumbar Supprot
Component Location Index 22-315
Circuit Diagram 22-316
Switch Test/ Replacement 22-317
Motor Test 22-317

Power Seats
Component Location Index 22-318
Circuit Diagram 22-319
Switch Test/ Replacement 22-320
Motor Test 22-321

Immobilizer System
Component Location Index 22-322
System Description 22-323
Circuit Diagram 22-324
Troubleshooting 22-325
Immobilizer Control Unit-Receiver Replacement 22-326

Driving Position Memory System (DPMS)
Component Location Index 22-327
System Description 22-329
Circuit Diagram 22-330
General Troubleshooting Information 22-336
System Input Test and Function Test 22-339
Power Seat Control Unit Input Test 22-348
Power Mirror Control Unit Input Test 22-350
DTC Troubleshooting 22-352
Driver's Power Seat Motor Test 22-384
Driving Position Memory Switch Test/Replacement 22-385
Switch Test/ Replacement 22-386

Audio System
Component Location Index 22-387
Speaker Test 22-389
Error Code List 22-390
System Description 22-391
Circuit Diagram 22-397
Symptom Troubleshooting Index 22-400
Symptom Troubleshooting 22-401
Audio Unit Removal/Installation 22-419
Audio-HVAC Subdisplay-Clock Removal/Installation 22-419
Stereo Amplifier Removal/Installation 22-420
XM Receiver Removal/Installation 22-420
Speaker Replacement 22-421
Radio Remote Switch Test/Replacement 22-423
Antenna Module Replacement 22-424
XM Antenna Replacement 22-424
Window Antenna Repair 22-425

Display Panel Control System
Component Location Index 22-426
General Troubleshooting Information 22-427
System Description 22-428
Circuit Diagram 22-430
DTC Troubleshooting 22-432
Control Unit Input Test 22-435
Audio-HVAC Display Module Assembly Removal/Installation 22-437
Display Panel Control Unit Removal/Installation 22-438

HandsFreeLink System
Component Location Index 22-439
General Troubleshooting Information 22-440
Circuit Diagram 22-443
Control Unit Input Test 22-445
DTC Troubleshooting 22-446
HFL Switch or HFL-Voice Control Switch Test/Replacement 22-451

Navigation System 22-453

Protected by R

Special Tools

Ref. No.	Tool Number	Description	Qty
①	07WAZ-001010A	MPCS (MCIC) Service Connector	1
②	07LAJ-PT3020A	Test Harness	1
③	07TAZ-001020A	Back Probe Adaptor	1

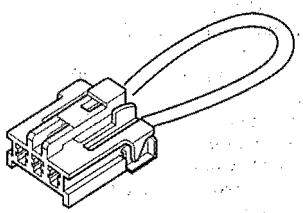

①

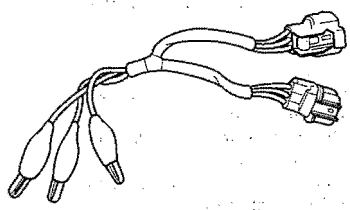

②

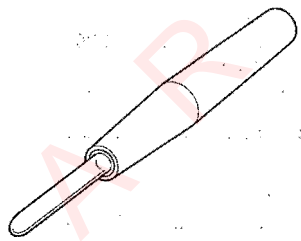

③

Protected by A R

General Troubleshooting Information

Tips and Precautions

Before Troubleshooting

1. Check applicable fuses in the appropriate fuse/relay box.

2. Check the battery for damage, state of charge, and clean and tight connections.

NOTICE

- Do not quick-charge a battery unless the battery ground cable has been disconnected, otherwise you will damage the alternator diodes.
- Do not attempt to crank the engine with the battery ground cable loosely connected or you will severely damage the wiring.

Handling Connectors

- Make sure the connectors are clean and have no loose wire terminals.
- Make sure multiple cavity connectors are packed with dielectric grease (except watertight connectors).
- All connectors have push-down release type locks (A).

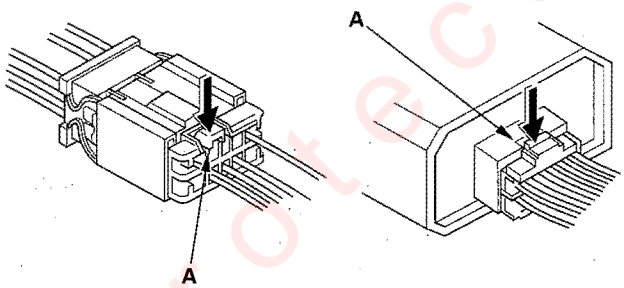

- Some connectors have a clip on their side used to attach them to a mount bracket on the body or on another component. This clip has a pull type lock.
- Some mounted connectors cannot be disconnected unless you first release the lock and remove the connector from its mount bracket (A).

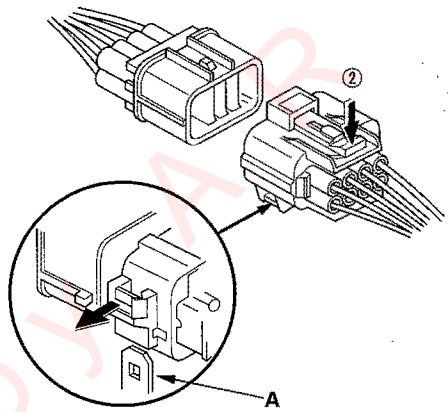

- Never try to disconnect connectors by pulling on their wires; pull on the connector halves instead.
- Always reinstall plastic covers.

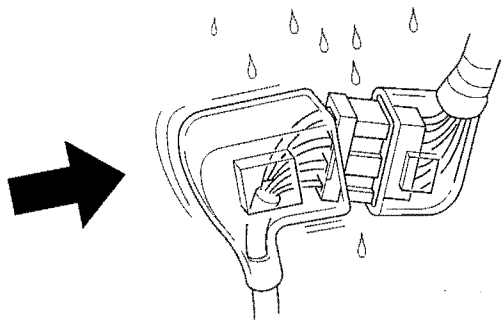

- Before connecting connectors, make sure the terminals (A) are in place and not bent.

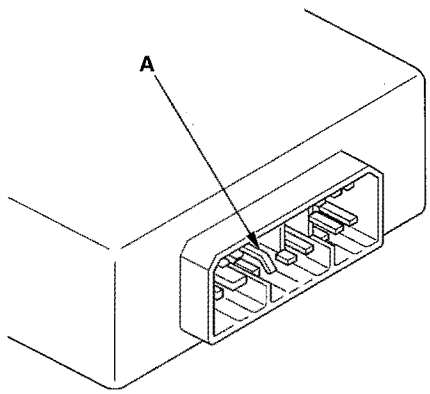

(cont'd)

Protected by AR

General Troubleshooting Information (cont'd)

- Check for loose retainer (A) and rubber seals (B).

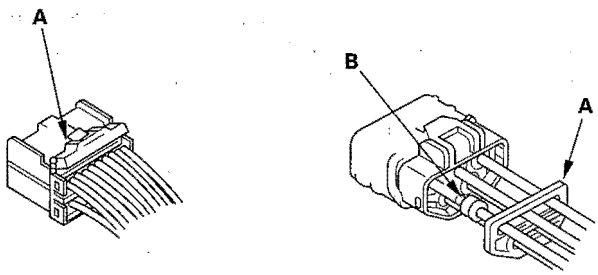

- The backs of some connectors are packed with dielectric grease. Add grease if necessary. If the grease is contaminated, replace it.

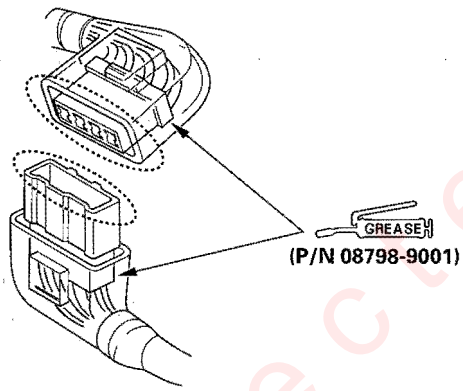

- Insert the connector all the way and make sure it is securely locked.
- Position wires so that the open end of the cover faces down.

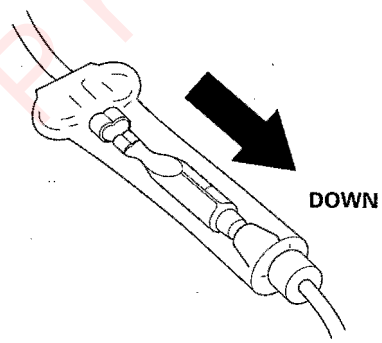

Handling Wires and Harnesses

- Secure wires and wire harnesses to the frame with their respective wire ties at the designated locations.
- Remove clips carefully; don't damage their locks (A).

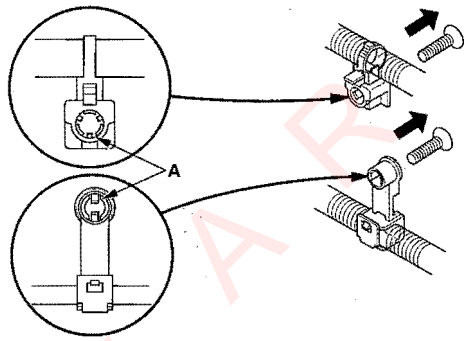

- Slip pliers (A) under the clip base and through the hole at an angle, then squeeze the expansion tabs to release the clip.

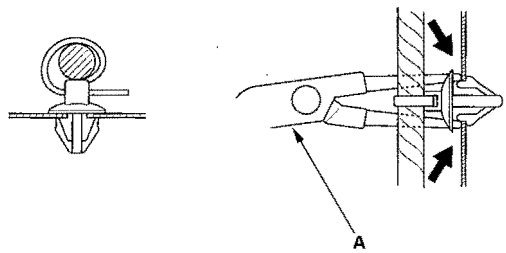

- After installing harness clips, make sure the harness doesn't interfere with any moving parts.
- Keep wire harnesses away from exhaust pipes and other hot parts, from sharp edges of brackets and holes, and from exposed screws and bolts.
- Seat grommets in their grooves properly (A). Do not leave grommets distorted (B).

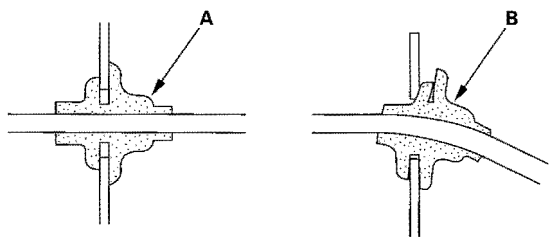

Protected by ARS

Testing and Repairs

- Do not use wires or harnesses with broken insulation. Replace them or repair them by wrapping the break with electrical tape.
- After installing parts, make sure that no wires are pinched under them.
- When using electrical test equipment, follow the manufacturer's instructions and those described in this manual.
- If possible, insert the probe of the tester from the wire side (except waterproof connector).

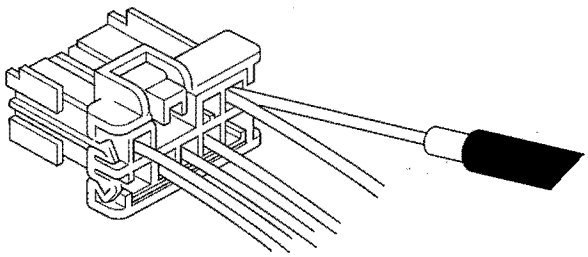

- Use back probe adaptor 07TAZ-001020A.

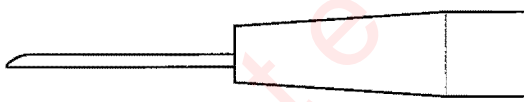

- Refer to the instructions in the Honda Terminal Kit for identification and replacement of connector terminals.

Five-step Troubleshooting

1. Verify The Complaint
   Turn on all the components in the problem circuit to verify the customer complaint. Note the symptoms. Do not begin disassembly or testing until you have narrowed down the problem area.

2. Analyze The Schematic
   Look up the schematic for the problem circuit. Determine how the circuit is supposed to work by tracing the current paths from the power feed through the circuit components to ground. If several circuits fail at the same time, the fuse or ground is a likely cause.

   Based on the symptoms and your understanding of the circuit operation, identify one or more possible causes of the problem.

3. Isolate The Problem By Testing The Circuit
   Make circuit tests to check the diagnosis you made in step 2. Keep in mind that a logical, simple procedure is the key to efficient troubleshooting. Test for the most likely cause of failure first. Try to make tests at points that are easily accessible.

4. Fix The Problem
   Once the specific problem is identified, make the repair. Be sure to use proper tools and safe procedures.

5. Make Sure The Circuit Works
   Turn on all components in the repaired circuit in all modes to make sure you've fixed the entire problem. If the problem was a blown fuse, be sure to test all of the circuits on the fuse. Make sure no new problems turn up and the original problem does not recur.

(cont'd)

Protected by KAR

General Troubleshooting Information (cont'd)

Wire Color Codes

The following abbreviations are used to identify wire colors in the circuit schematics:

WHT	White
YEL	Yellow
BLK	Black
BLU	Blue
GRN	Green
RED	Red
ORN	Orange
PNK	Pink
BRN	Brown
GRY	Gray
PUR	Purple
LT BLU	Light Blue
LT GRN	Light Green

The wire insulation has one color or one color with another color stripe. The second color is the stripe.

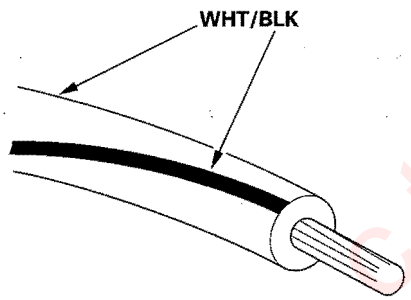

How to Check for DTCs with the Honda Diagnostic System (HDS)

1. Connect the Honda Diagnostic System (HDS) to the Data Link Connector (DLC) (A) located under the driver's side of the dashboard.

   NOTE: For specific operations, refer to the user's manual that came with the Honda Diagnostic System (HDS).

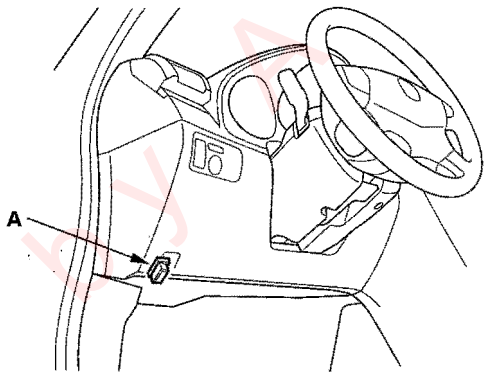

2. Select the TEST MODE MENU and check for Diagnostic Trouble Code (DTCs), and note them. Refer to the Troubleshooting Index and begin the appropriate troubleshooting procedure.

Protected by

Relay and Control Unit Locations

Engine Compartment

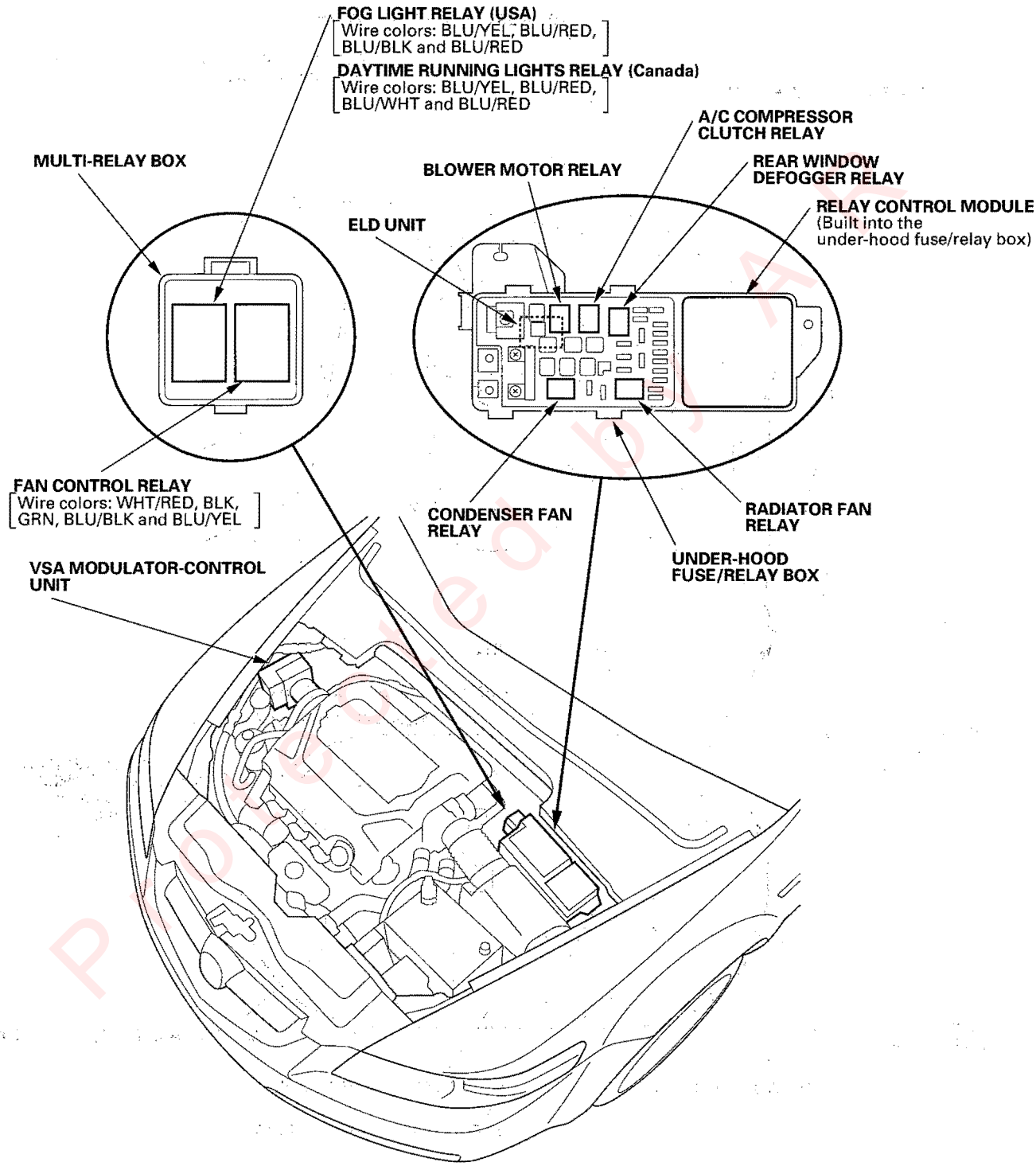

Produced by A

Relay and Control Unit Locations

Dashboard

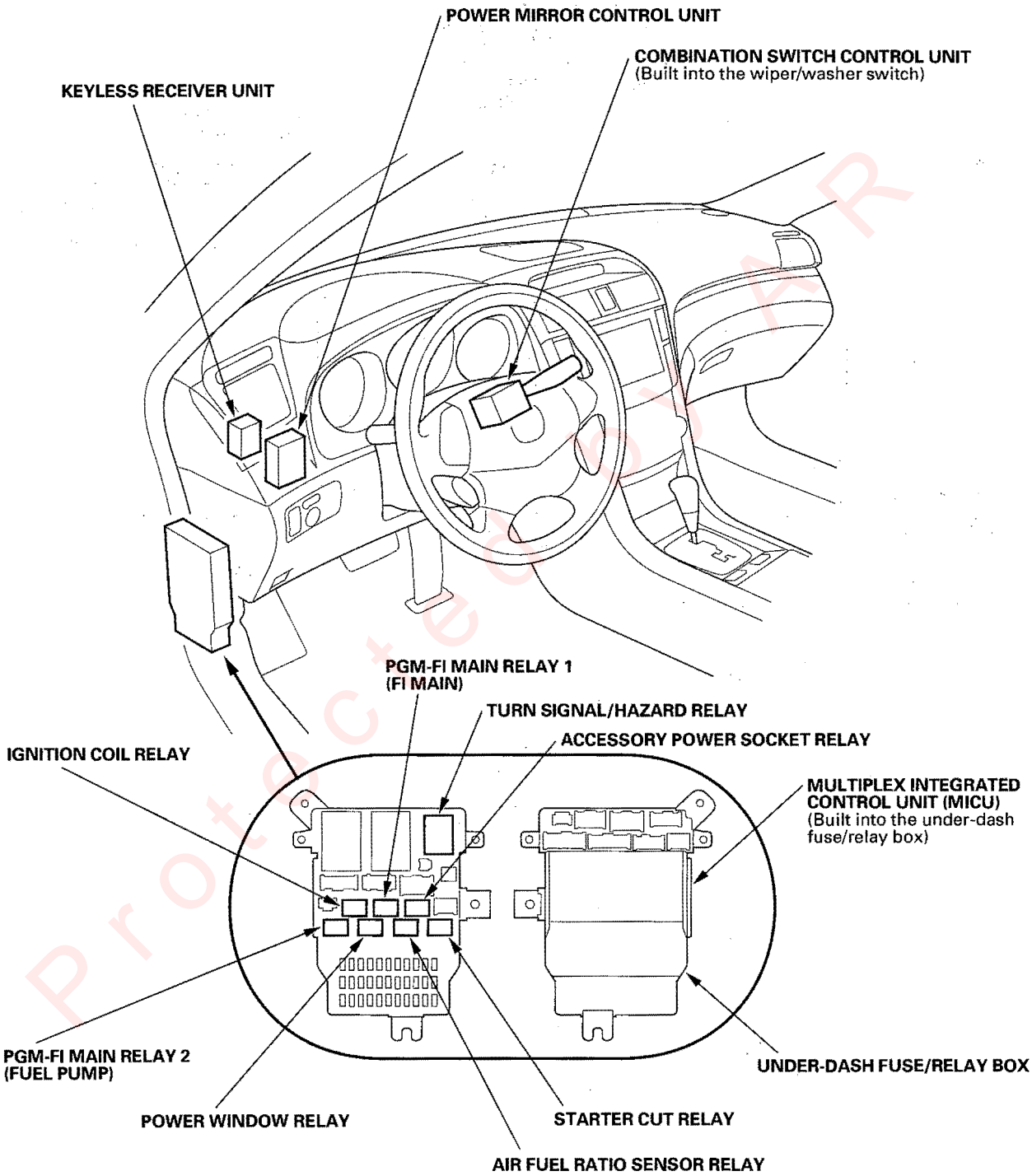

Protected by AR

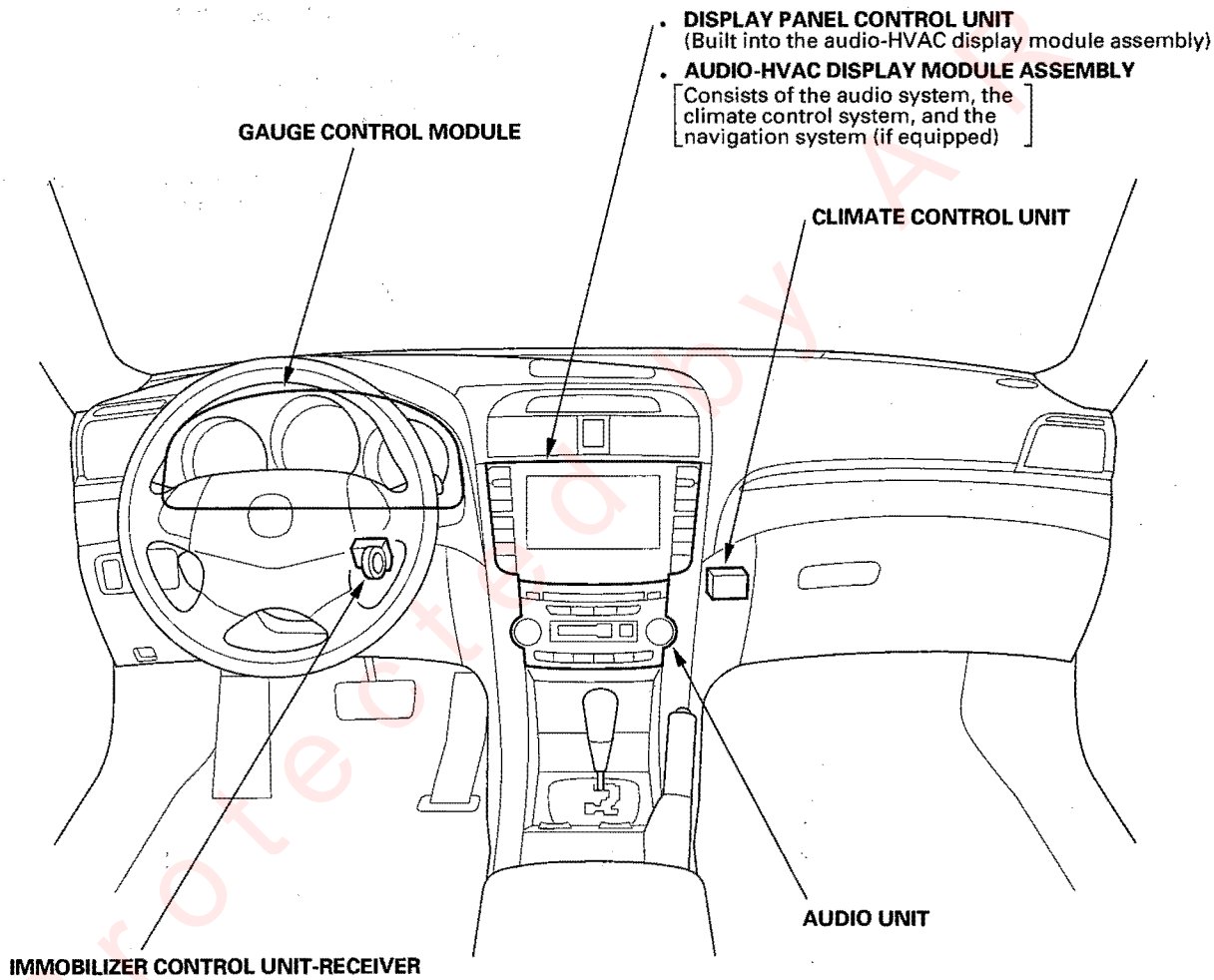

Protected by A

(cont'd)

Relay and Control Unit Locations

Dashboard (cont'd)

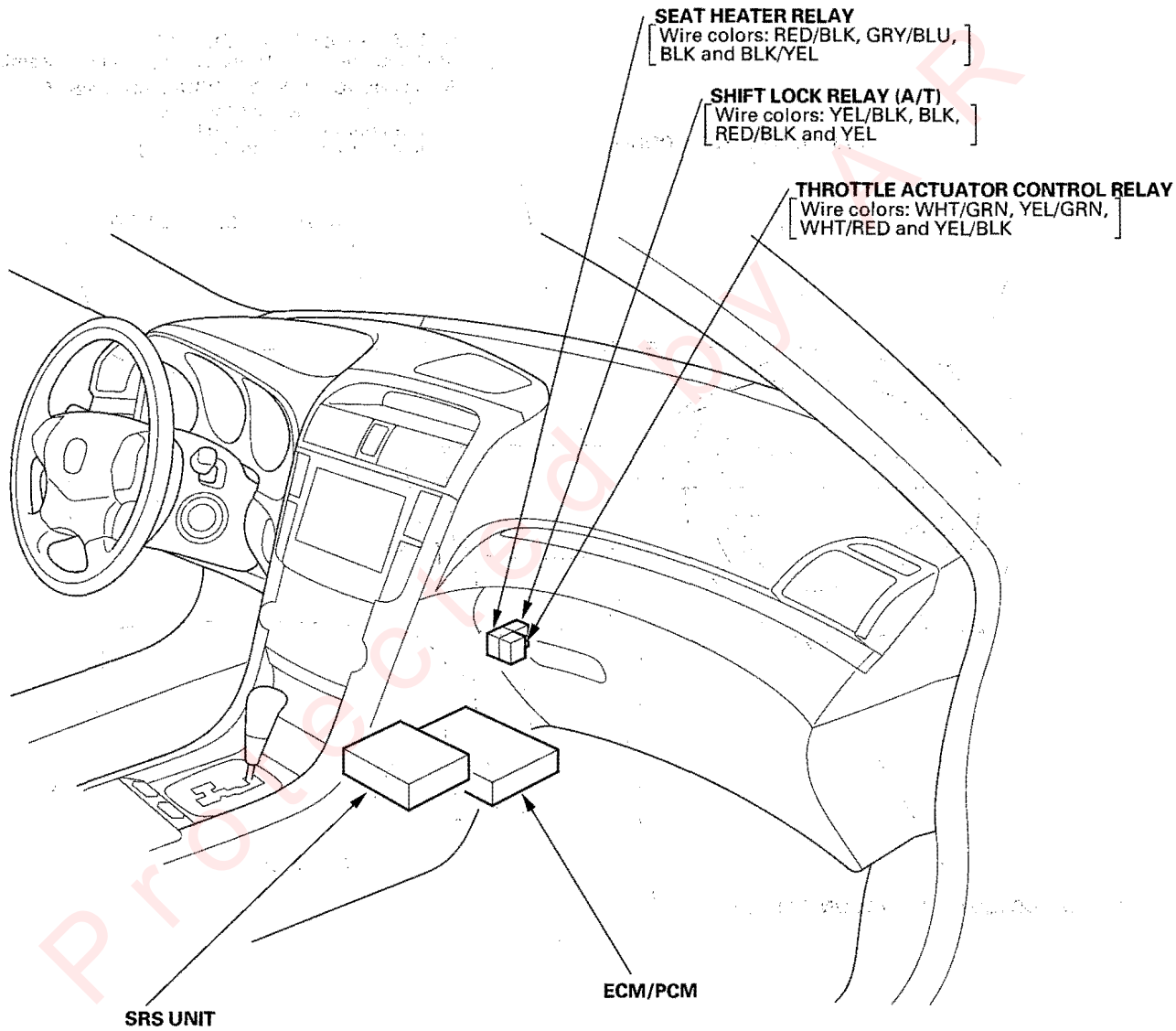

Protected by AR

Roof and Trunk

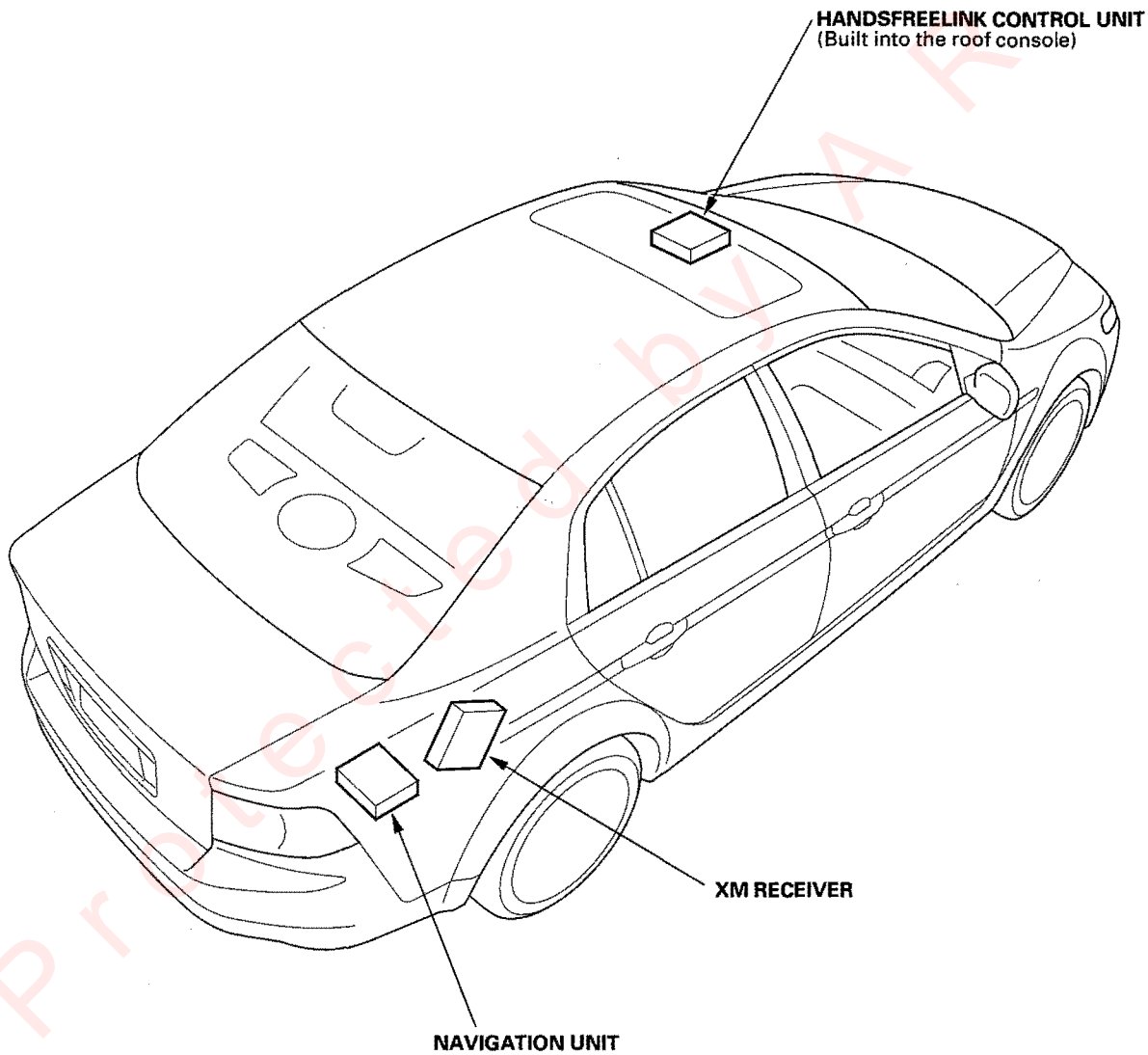

Protected by AR

Relay and Control Unit Locations

Door and Seat

Dirver's Door:

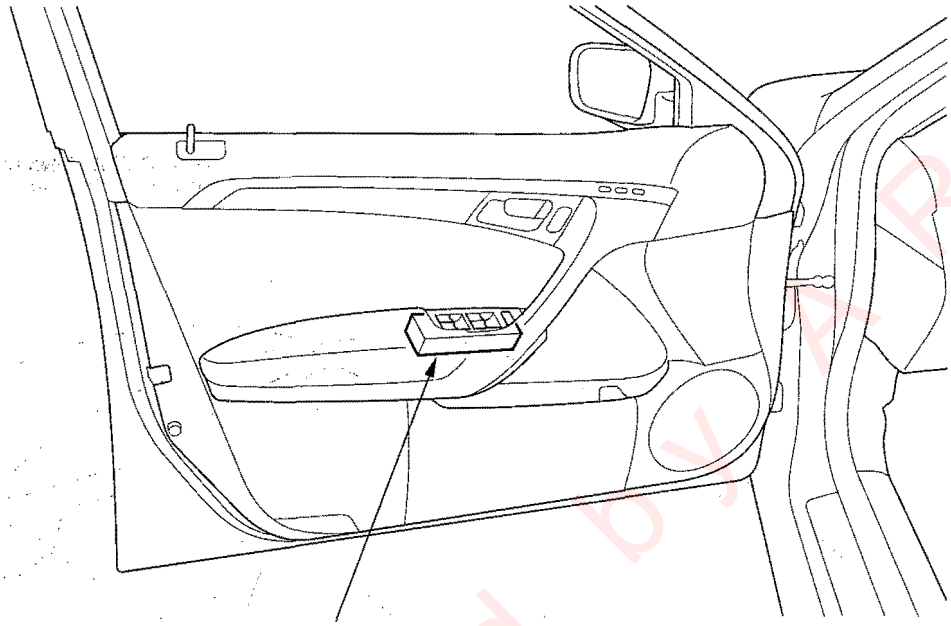

DOOR MULTIPLEX CONTROL UNIT
(Built into the power window master switch)

Driver's Seat:

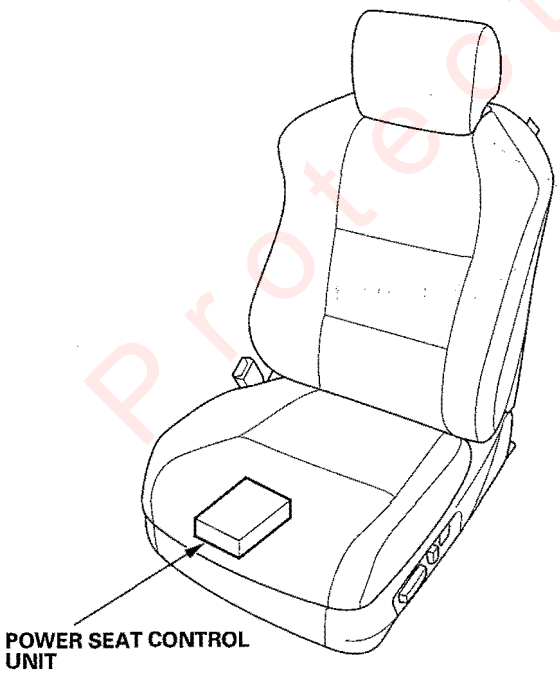

Front Passenger's Seat:

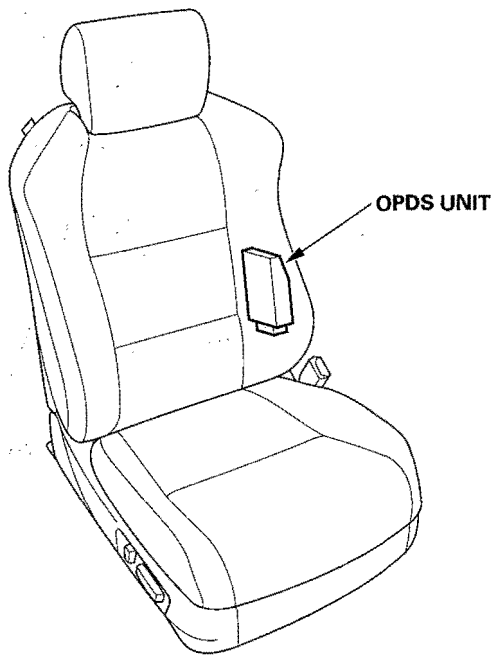

Protected by AR

Connectors and Harnesses

Connector Index

Identification numbers have been assigned to in-line connectors. The number is preceded by the letter "C" for connectors, "G" for ground terminals or "T" for non-ground terminals.

Harness	Location			
	Engine Compartment	Dashboard	Others (Floor, Door, Trunk, and Roof)	Notes
Battery ground cable	(−) G1			(see page 22-14)
Engine ground cable A	T1 G2			(see page 22-14)
Engine ground cable B	T2 G3			(see page 22-14)
Starter cable	T3 and (+) T101			(see page 22-14)
Engine wire harness	C101 through C105 C151 through C155 T101 and T102 G101 and G102			(see page 22-16)
CKP sensor subharness	C155			(see page 22-25)
A/T subharness	C151 G151			(see page 22-24)
Transmission range switch subharness	C152			(see page 22-24)
Knock sensor subharness	C154			(see page 22-25)
ECM/PCM wire harness	C101, C102, C103	C171 and C251		(see page 22-26)
Throttle actuator control module subharness		C251		(see page 22-26)
Cable reel subharness		C451		(see page 22-26)
Front engine compartment wire harness (left branch)	C301 and C305 G301			(see page 22-29)
Front engine compartment wire harness (right branch)	G201			(see page 22-29)
Engine compartment wire harness (left branch)	C153 and C301 G302	C302, C303, C304		(see page 22-32)
Engine compartment wire harness (right branch)	G202 and G203			(see page 22-32)
Dashboard wire harness (left branch)		C302, C303, C304, C451, C501, C502, C634, C651, C851 G501, G502		(see page 22-38)
Dashboard wire harness (right branch)		C171, C503, C504, C505, C514, C731, C732 G503 through G506		(see page 22-38)
Floor wire harness (left side)		C501 and C502	C701, C751, C901 G601 and G603	(see page 22-46)
Floor wire harness (right side)		C503, C504, C505, C601	C781, C801, C951 G602 and G604	(see page 22-46)
Rear wire harness			C701 G701	(see page 22-51)
Rear window defogger ground wire			G801	(see page 22-46)
Roof wire harness			C601 and C651	(see page 22-50)
Driver's door wire harness A			C631, C632, C633	(see page 22-52)
Driver's door subharness		C634	C631 and C632	(see page 22-52)
Driver's door wire harness B			C633	(see page 22-52)
Front passenger's door wire harness			C733 and C734	(see page 22-54)
Front passenger's door subharness		C731 and C732	C733 and C734	(see page 22-54)
Left rear door wire harness			C751	(see page 22-55)
Right rear door wire harness			C781	(see page 22-56)
Driver's seat wire harness			C901 and C902	(see page 22-58)
Driver's seat subharness			C902	(see page 22-58)
Front passenger's seat wire harness			C951 and C952	(see page 22-57)
Front passenger's seat subharness			C952	(see page 22-57)
OPDS unit harness				(see page 22-60)
Side curtain airbag harness				(see page 22-60)
A/C wire harness		C851		(see page 22-63)

Protected by AR

Connector to Harness Index

Starter Cable

Connector or Terminal	Ref	Cavities	Location	Connects to	Notes
T3	7		Left side of engine compartment	Starter motor	
T101	2		Left side of engine compartment	Under-hood fuse/relay box	
(+)	4		Battery	Battery positive terminal	

Battery Ground Cable

Connector or Terminal	Ref	Cavities	Location	Connects to	Notes
G1	6		Left side of engine compartment	Body ground, via battery ground cable	
(−)	5		Battery	Battery negative terminal	

Engine Ground Cable A

Connector or Terminal	Ref	Cavities	Location	Connects to	Notes
T1	8		Right side of engine compartment	Body ground, via battery ground cable	
G2	9		Right side of engine compartment	Body ground, via engine ground cable A	

Engine Ground Cable B

Connector or Terminal	Ref	Cavities	Location	Connects to	Notes
T2	1		Left side of engine compartment	Transmission housing	
G3	3		Left side of engine compartment	Body ground, via engine ground cable B	

Protected by A

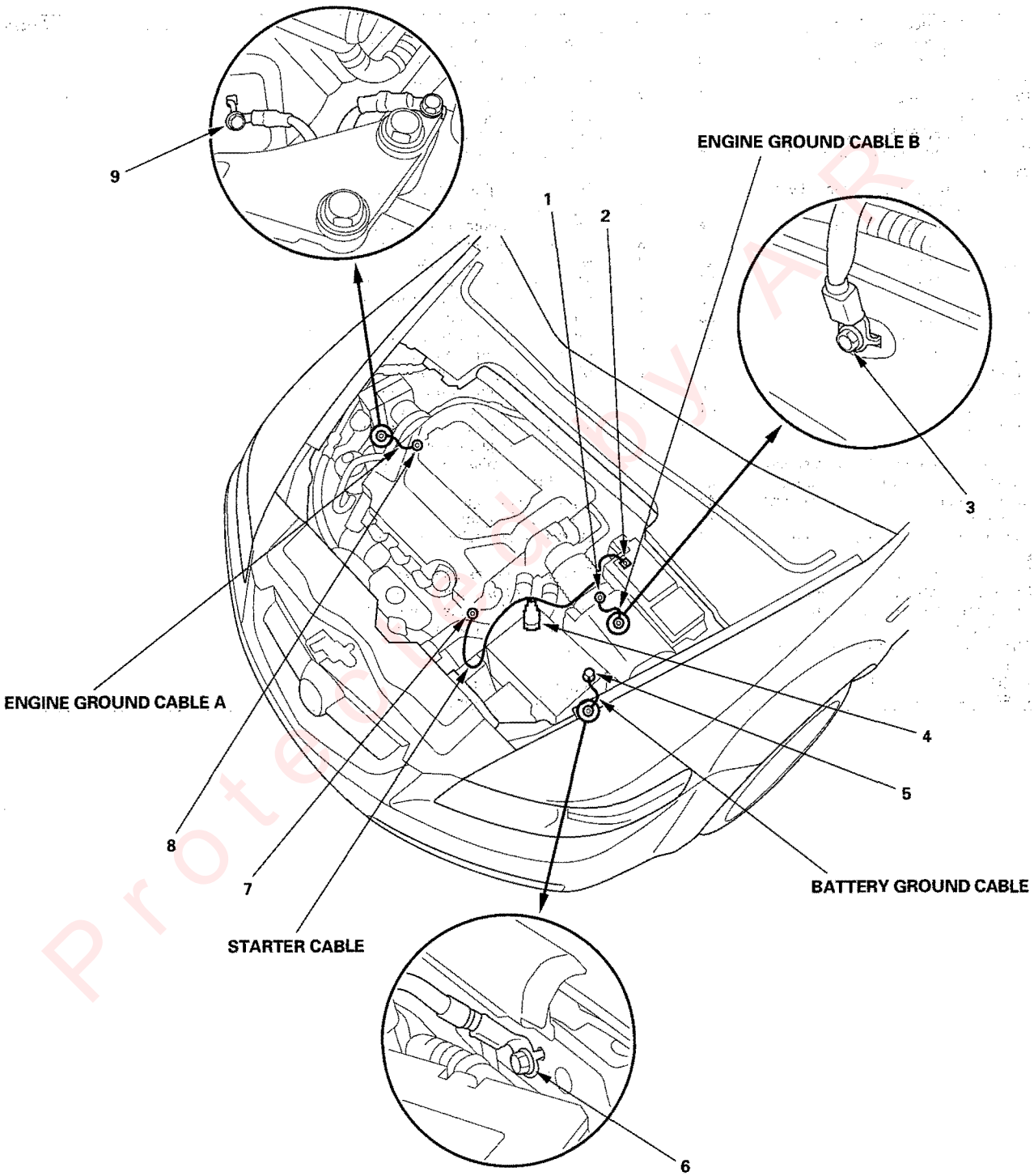

Protected by AR

Connector to Harness Index (cont'd)

Engine Wire Harness (M/T)

Connector or Terminal	Ref	Cavities	Location	Connects to	Notes
A/F sensor (bank 1, sensor 1)	12	8	Rear side of exhaust manifold		
A/F sensor (bank 2, sensor 1)	33	8	Front side of exhaust mainfold		
Alternator	38	4	Right side of engine compartment		
Back-up light switch	28	2	On the transmission housing		
CMP sensor	43	3	Left side of engine		
EGR valve and EGR valve lift sensor	31	6	Left side of engine		
Engine coolant temperature (ECT) sensor	25	2	Left side of engine		
Engine mount control solenoid valve	10	2	Middle of engine compartment		
Engine oil pressure switch	45	1	Right side of engine		
EVAP canister purge valve	14	2	Left side of engine compartment		
Ignition coil No. 1	4	3	Middle of engine compartment		
Ignition coil No. 2	6	3	Middle of engine compartment		
Ignition coil No. 3	11	3	Middle of engine compartment		
Ignition coil No. 4	39	3	Middle of engine compartment		
Ignition coil No. 5	36	3	Middle of engine compartment		
Ignition coil No. 6	34	3	Middle of engine compartment		
Injector No. 1	5	2	Middle of engine compartment		
Injector No. 2	7	2	Middle of engine compartment		
Injector No. 3	9	2	Middle of engine compartment		
Injector No. 4	41	2	Middle of engine compartment		
Injector No. 5	37	2	Middle of engine compartment		
Injector No. 6	35	2	Middle of engine compartment		
Input shaft (mainshaft) speed sensor	29	3	On the transmission housing		
Intake air temperature (IAT) sensor	24	2	Left side of engine		
Intake manifold tuning (IMT) actuator	44	5	Right side of engine		
MAP sensor	23	3	Left side of engine		
Output shaft (countershaft) speed sensor	30	3	On the transmission housing		
Reverse lockout solenoid	26	2	On the transmission housing		
Secondary HO2S (bank 1, sensor 2)	13	4	Rear side of exhaust manifold		
Secondary HO2S (bank 2, sensor 2)	32	4	Front side of exhaust manifold		
Starter solenoid	27	1	Left side of engine compartment		
Throttle actuator and throttle position sensor	21	6	Left side of engine		
VTEC oil pressure switch	46	2	Right side of engine		
VTEC solenoid valve	1	1	Right side of engine		

Protected by A R

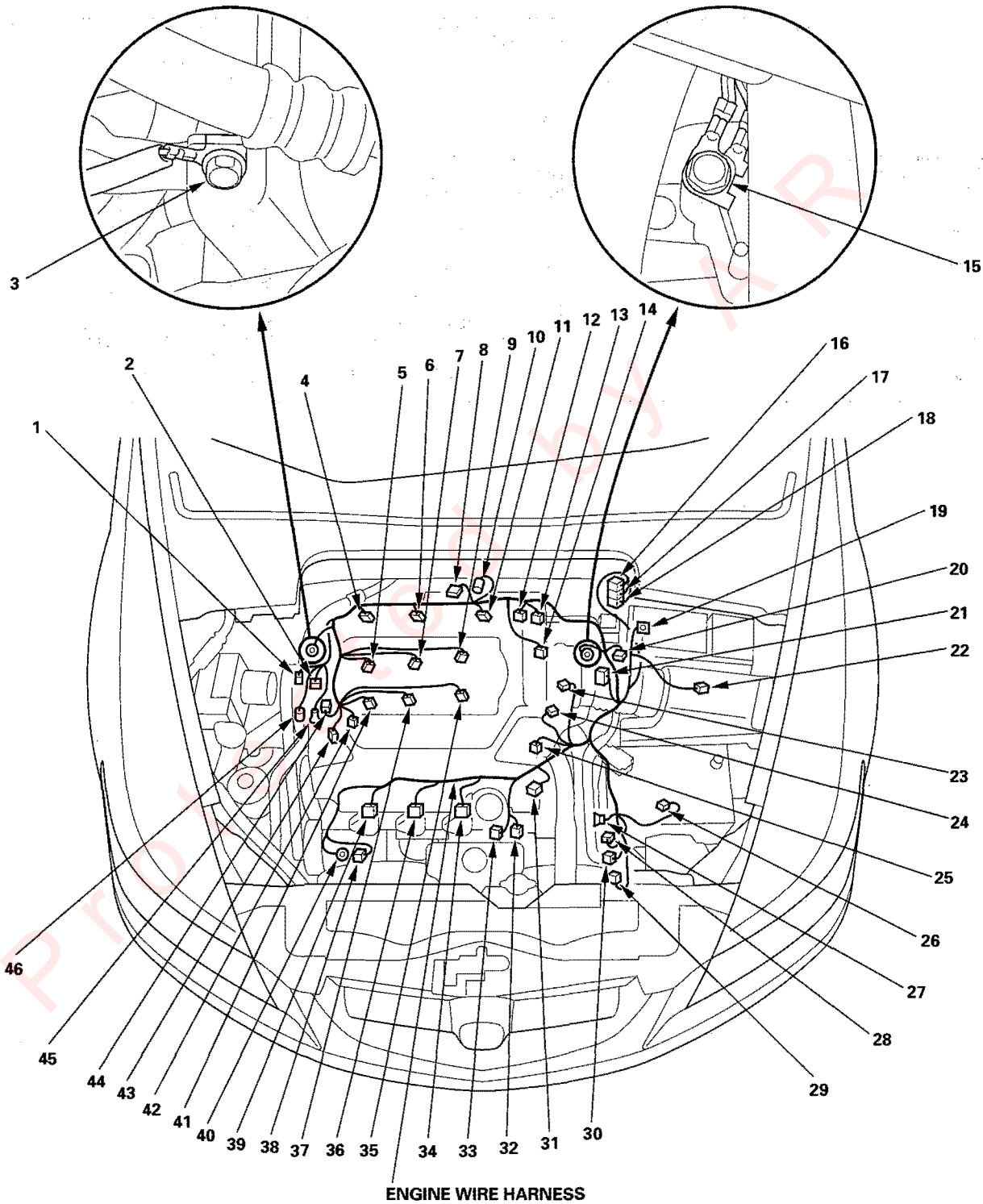
3
15
1
2
4
5
6
7
8
9
10
11
12
13
14
16
17
18
19
20
21
22
23
24
25
26
27
28
29
30
31
32
33
34
35
36
37
38
39
40
41
42
43
44
45
46
ENGINE WIRE HARNESS

(cont'd)

Connector to Harness Index (cont'd)

Engine Wire Harness (M/T) (cont'd)

Connector or Terminal	Ref	Cavities	Location	Connects to	Notes
C101	16	33	Left side of engine compartment	ECM/PCM wire harness (see page 22-26)	
C102	17	33	Left side of engine compartment	ECM/PCM wire harness (see page 22-26)	
C103	18	23	Left side of engine compartment	ECM/PCM wire harness (see page 22-26)	
C104 (Junction connector A)	8	24	Middle of engine compartment		
C105 (Junction connector B)	20	24	Left side of engine compartment		
C153	22	1	Right side of engine compartment	Engine compartment wire harness (see page 22-32)	
C154	42	1	Right side of engine	Knock sensor subharness (see page 22-25)	
C155	2	6	Right side of engine	CKP sensor subharness (see page 22-25)	
T102	19		Under-hood fuse/relay box		
T103	40		Middle of engine compartment	Alternator	
G101	15		Left side of engine compartment	Engine ground, via engine wire harness	
G102	3		Right side of engine compartment	Engine ground, via engine wire harness	

Protected by ARP

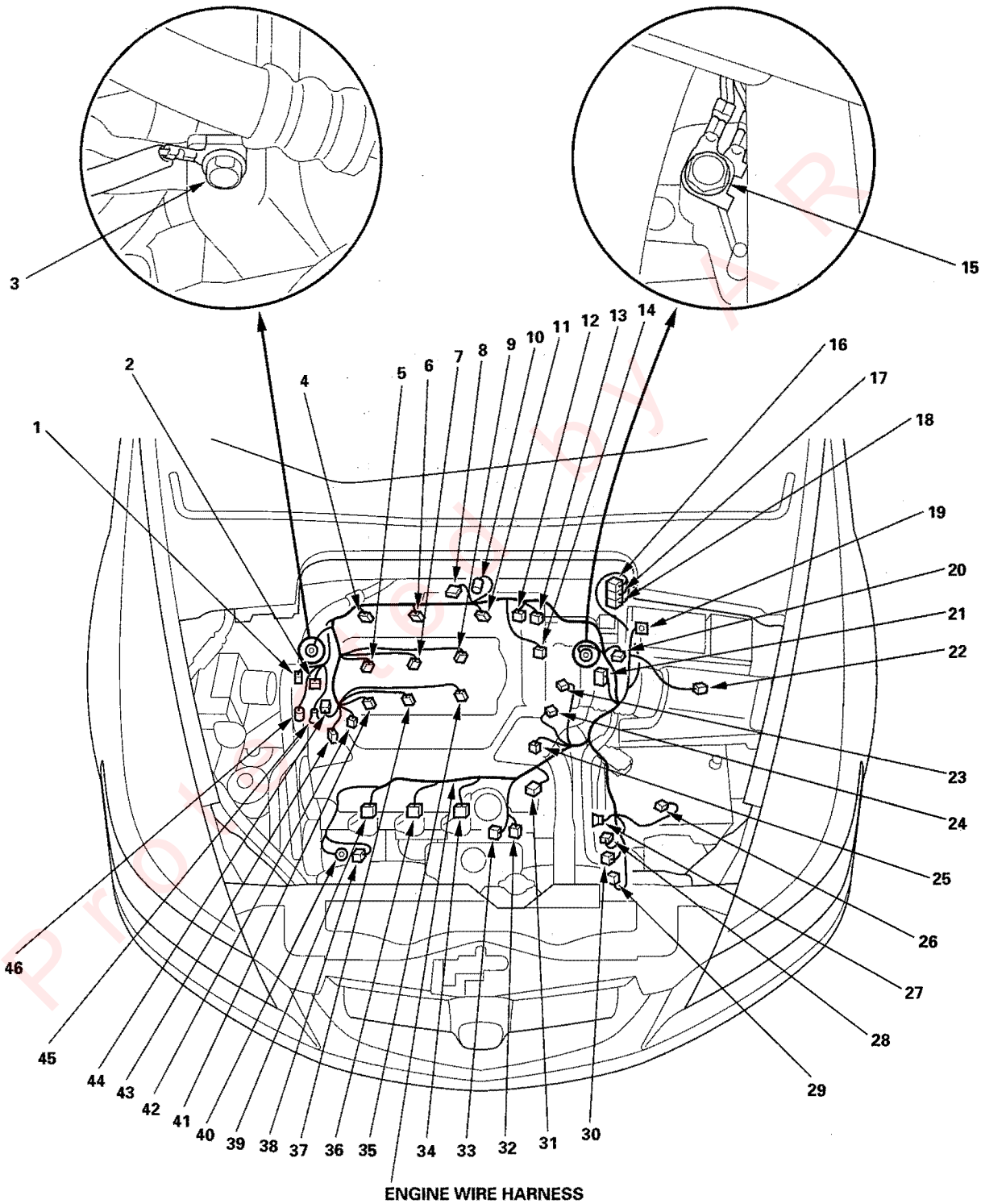
3
15
1
2
4
5
6
7
8
9
10
11
12
13
14
16
17
18
19
20
21
22
23
24
25
26
27
28
29
30
31
32
33
34
35
36
37
38
39
40
41
42
43
44
45
46
ENGINE WIRE HARNESS

Connector to Harness Index (cont'd)

Engine Wire Harness (A/T)

Connector or Terminal	Ref	Cavities	Location	Connects to	Notes
A/F sensor (bank 1, sensor 1)	12	8	Rear side of exhaust manifold		
A/F sensor (bank 2, sensor 1)	41	8	Front side of exhaust manifold		
Alternator	45	4	Right side of engine compartment		
A/T clutch pressure control solenoid valve A	31	2	On the transmission housing		
A/T clutch pressure control solenoid valve B	29	2	On the transmission housing		
A/T clutch pressure control solenoid valve C	33	2	On the transmission housing		
CMP sensor	51	3	Left side of engine		
EGR valve and EGR valve lift sensor	38	6	Left side of engine		
Engine coolant temperature (ECT) sensor	39	2	Left side of engine		
Engine mount control solenoid valve	10	2	Middle of engine compartment		
Engine oil pressure switch	53	1	Right side of engine		
EVAP canister purge valve	13	2	Left side of engine compartment		
Ignition coil No. 1	5	3	Middle of engine compartment		
Ignition coil No. 2	7	3	Middle of engine compartment		
Ignition coil No. 3	11	3	Middle of engine compartment		
Ignition coil No. 4	46	3	Middle of engine compartment		
Ignition coil No. 5	44	3	Middle of engine compartment		
Ignition coil No. 6	42	3	Middle of engine compartment		
Injector No. 1	4	2	Middle of engine compartment		
Injector No. 2	6	2	Middle of engine compartment		
Injector No. 3	8	2	Middle of engine compartment		
Injector No. 4	49	2	Middle of engine compartment		
Injector No. 5	48	2	Middle of engine compartment		
Injector No. 6	43	2	Middle of engine compartment		
Input shaft (mainshaft) speed sensor	30	3	On the transmission housing		
Intake air temperature (IAT) sensor	15	2	Left side of engine		
Intake manifold tuning (IMT) actuator	52	5	Right side of engine		
MAP sensor	16	3	Left side of engine		
Output shaft (countershaft) speed sensor	25	3	On the transmission housing		
Secondary HO2S (bank 1, sensor 2)	14	4	Rear side of exhaust manifold		
Secondary HO2S (bank 2, sensor 2)	40	4	Front side of exhaust manifold		
Shift solenoid valve A	36	2	On the transmission housing		
Shift solenoid valve B	37	2	On the transmission housing		
Shift solenoid valve C	34	2	On the transmission housing		
Starter solenoid	35	1	Left side of engine compartment		
Throttle actuator and throttle position sensor	26	6	Left side of engine		
Torque coverter clutch solenoid valve	32	2	On the transmission hosuing		
VTEC oil pressure switch	54	2	Right side of engine		
VTEC solenoid valve	1	1	Right side of engine		
4th clutch transmission fluid pressure switch	27	1	On the transmission housing		

Protected by A R

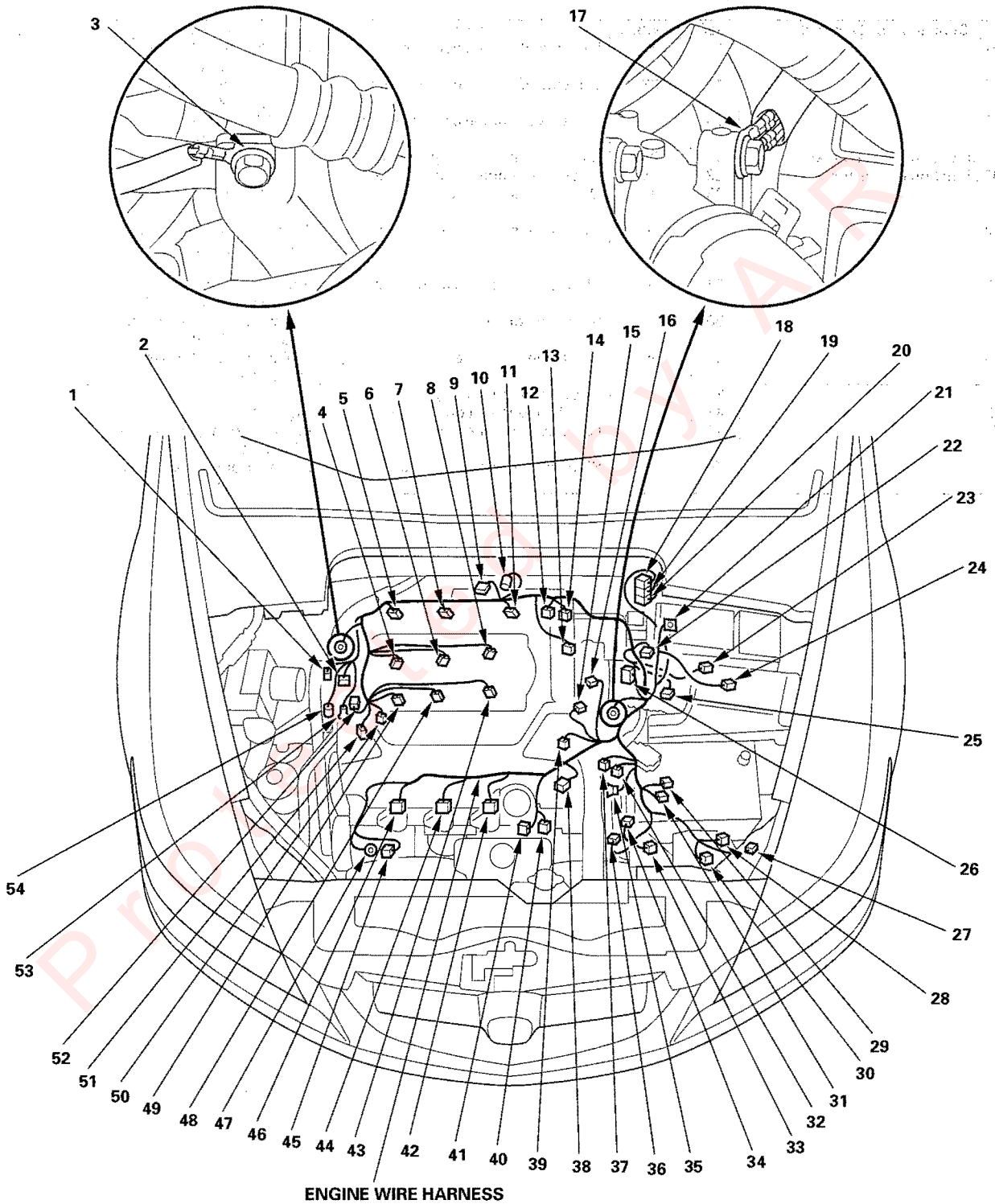

Protected by AR

(cont'd)

Connector to Harness Index (cont'd)

Engine Wire Harness (A/T) (cont'd)

Connector or Terminal	Ref	Cavities	Location	Connects to	Notes
C101	18	33	Left side of engine compartment	ECM/PCM wire harness (see page 22-26)	
C102	19	33	Left side of engine compartment	ECM/PCM wire harness (see page 22-26)	
C103	20	23	Left side of engine compartment	ECM/PCM wire harness (see page 22-26)	
C104 (Jnuction connector A)	9	24	Middle of engine compartment		
C105 (Jnuction connector B)	22	24	Left side of engine compartment		
C151	28	6	On transmission housing	A/T subharness (see page 22-24)	
C152	23	10	On transmission housing	Transmission range switch subharness (see page 22-24)	
C153	24	1	Right side of engine compartment	Engine compartment wire harness (see page 22-32)	
C154	50	1	Right side of engine	Knock sensor subharness (see page 22-25)	
C155	2	6	Right side of engine	CKP sensor subharness (see page 22-25)	
T102	21		Under-hood fuse/relay box		
T103	47		Middle of engine compartment	Alternator	
G101	17		Left side of engine compartment	Engine ground, via engine wire harness	
G102	3		Right side of engine compartment	Engine ground, via engine wire harness	

Protected by M R

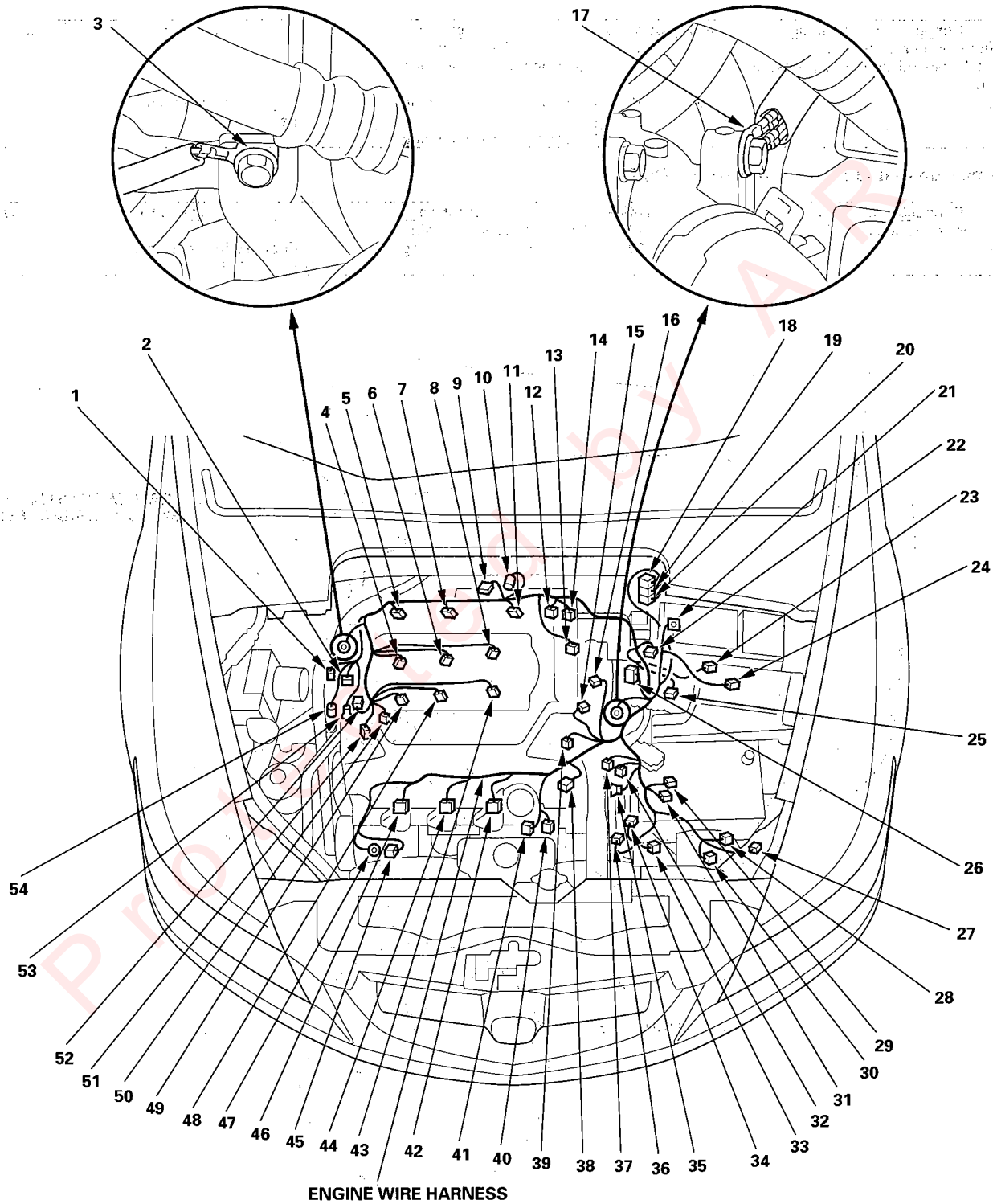

Protected by AR

Connector to Harness Index (cont'd)

A/T Subharness

Connector or Terminal	Ref	Cavities	Location	Connects to	Notes
A/T fluid temperature sensor	4	2	On transmission housing		
3rd clutch transmission fluid pressure switch	3	1	On transmission housing		
C151	6	6	On transmission housing	Engine wire harness (see page 22-16)	
G151	5		On transmission housing		

Transmission Range Switch Subharness (A/T)

Connector or Terminal	Ref	Cavities	Location	Connects to	Notes
Transmission range switch	2	10	On transmission housing		
C152	1	10	On transmission housing	Engine wire harness (see page 22-16)	

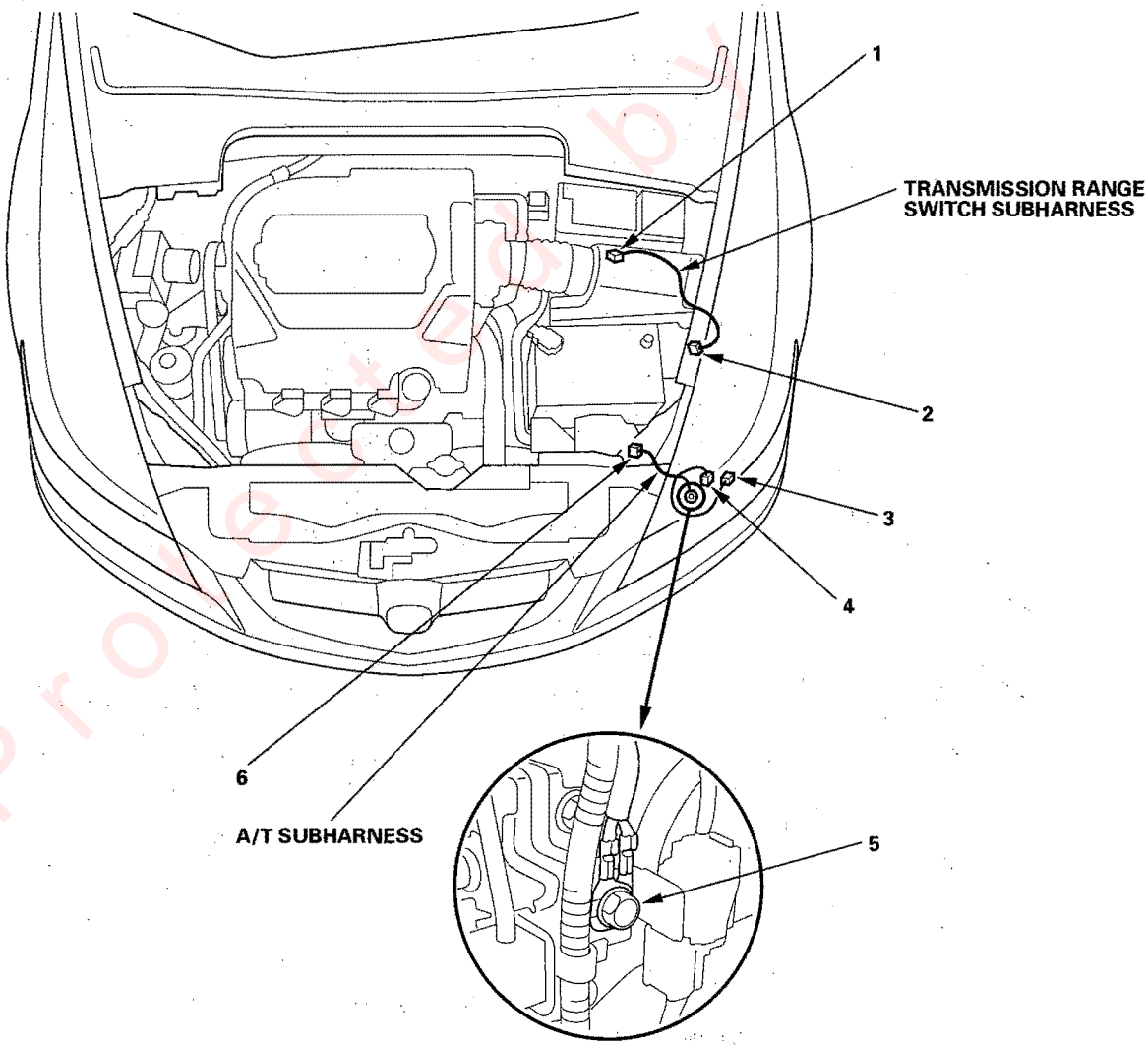

Protected by AR

Knock Sensor Subharness

Connector or Terminal	Ref	Cavities	Location	Connects to	Notes
Knock sensor	4	1	Middle of engine compartment		
C154	3	1	Right side of engine	Engine wire harness (see page 22-16)	

CKP Sensor Subharness

Connector or Terminal	Ref	Cavities	Location	Connects to	Notes
CKP sensor	2	6	Behind crankshaft pulley		
C155	1	6	Right side of engine	Engine wire harness (see page 22-16)	

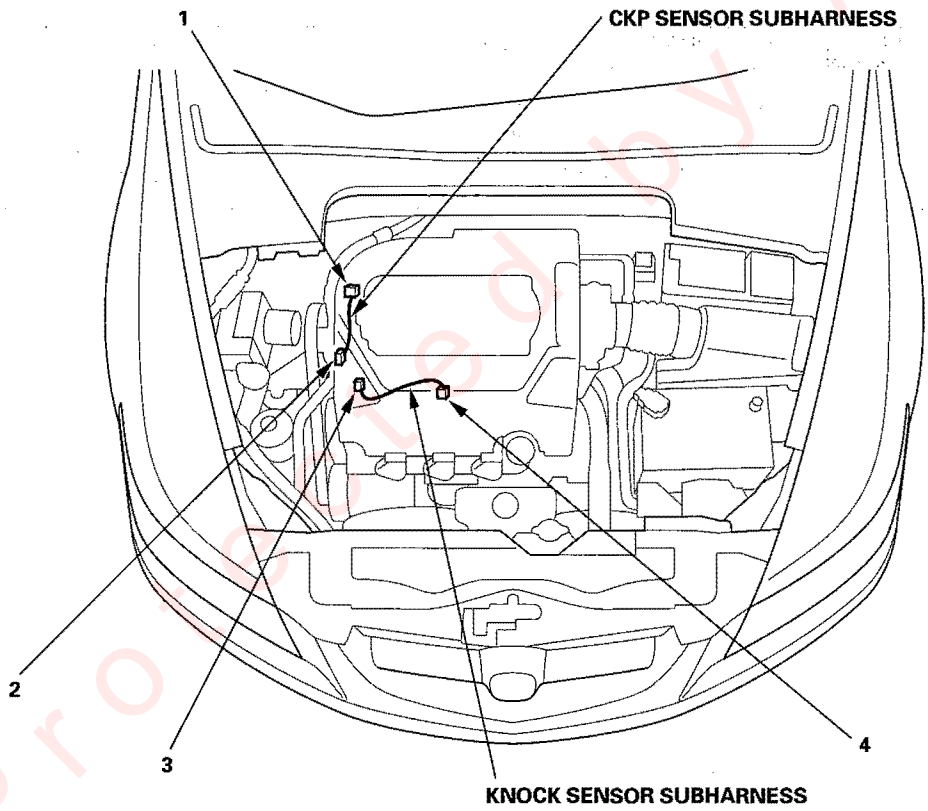

Protected by A R

Connector to Harness Index (cont'd)

ECM/PCM Wire Harness (Dashboard branch)

Connector or Terminal	Ref	Cavities	Location	Connects to	Notes
ECM/PCM connector B	7	6	Under middle side of dash		
ECM/PCM connector D	5	24	Under middle side of dash		
ECM/PCM connector E	4	17	Under middle side of dash		
PCM connector C	6	31	Under middle side of dash		
C171	3	17	Under middle of dash	Dashboard wire harness (see page 22-38)	
C251	2	13	Under middle of dash	Throttle actuator control module subharness	

Throttle Actuator Control Module Subharness

Connector or Terminal	Ref	Cavities	Location	Connects to	Notes
Throttle actuator control module	1	16	Under right side of dash		
C251	2	13	Under middle of dash	ECM/PCM wire harness	

Cable Reel Subharness

Connector or Terminal	Ref	Cavities	Location	Connects to	Notes
Cruise control master switch and set/ resume/cancel switch	12	7	Steering column		
HFL-voice control switch	9	5	Steering column		
Horn	8	1	Steering column		
Radio remote switch	10	7	Steering column		
C451	11	13	Steering column	Dashboard wire harness (see page 22-38)	

Protected by AR

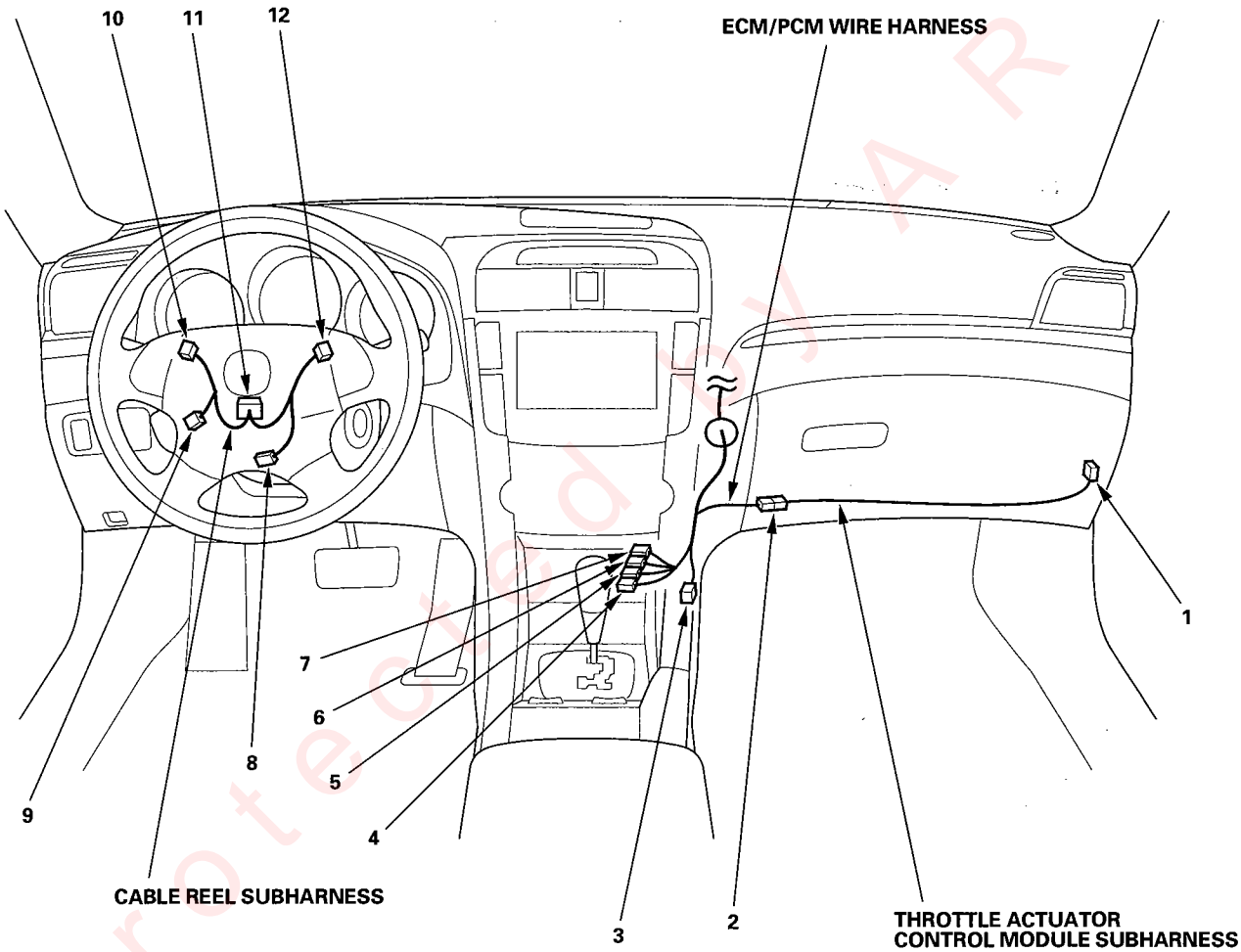

Protected by AR

Connector to Harness Index (cont'd)

ECM/PCM Wire Harness (Engine compartment branch)

Connector or Terminal	Ref	Cavities	Location	Connects to	Notes
APP sensor	1	6	Right side of engine		
C101	2	33	Left side of engine compartment	Engine wire harness (see page 22-16)	
C102	3	33	Left side of engine compartment	Engine wire harness (see page 22-16)	
C103	4	23	Left side of engine compartment	Engine wire harness (see page 22-16)	

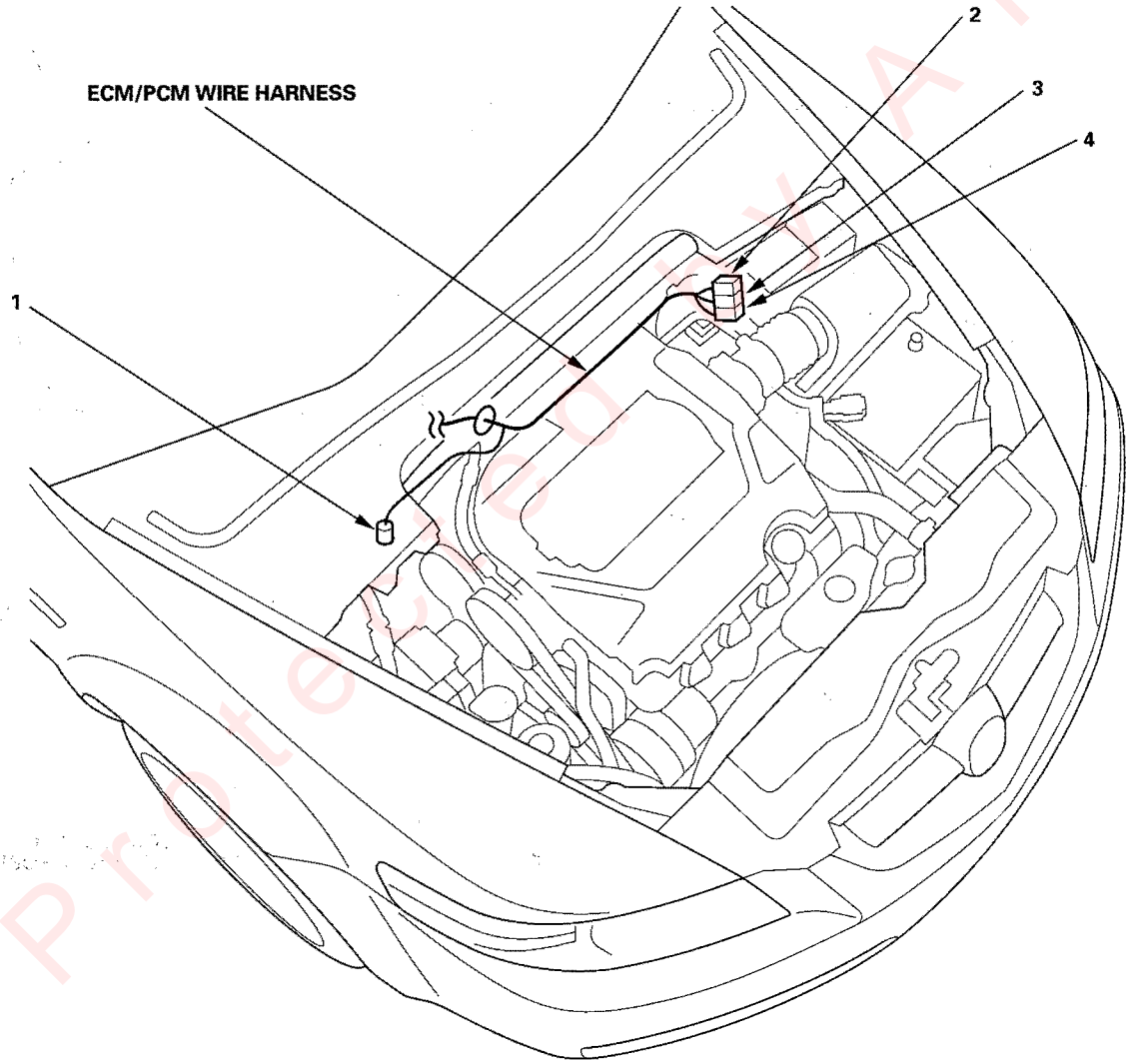

Protected by A R

Front Engine Compartment Wire Harness (Right branch)

Connector or Terminal	Ref	Cavities	Location	Connects to	Notes
A/C compressor clutch	3	1	Front of engine compartment		
A/C pressure switch	2	4	Front of engine compartment		
Condenser fan motor	1	2	Front of engine compartment		
Horn (low)	9	1	Right of engine compartment		
Right fog light	4	2	Behind right headlight		
Right front turn signal/parking light	8	3	Behind right headlight		
Right headlight (igniter unit)	6	2	Behind right headlight		
Right headlight (high/low switching solenoid)	7	3	Behind right headlight		
G201	5		Right front fenderwell	Body ground, via front engine compartment wire harness	

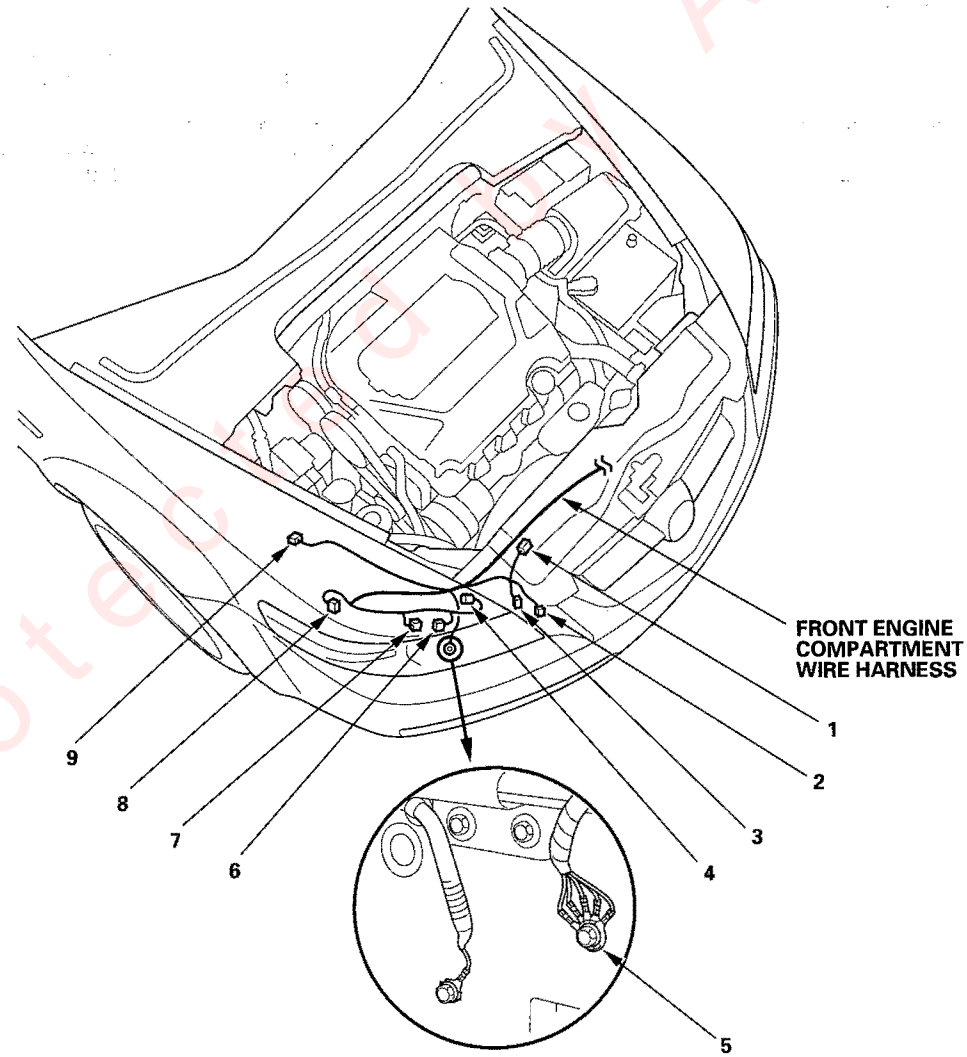

(cont'd)

Connector to Harness Index (cont'd)

Front Engine Compartment Wire Harness (Left branch)

Connector or Terminal	Ref	Cavities	Location	Connects to	Notes
Fan control relay	2	5	Left side of engine compartment		
Fog light relay/DRL relay	1	4	Left side of engine compartment		
Hood switch	15	2	Front of engine compartment		
Horn (high)	5	1	Left of engine compartment		
Left fog light	12	2	Behind left headlight		
Left front turn signal/parking light	8	3	Behind left headlight		
Left headlight (igniter unit)	11	2	Behind left headlight		
Left headlight (high/low switching solenoid)	10	3	Behind left headlight		
Outside air temperature sensor	14	2	Front of engine compartment		
Radiator fan motor	13	2	Front of engine compartment		
Under-hood fuse/relay box connector F (see page 22-64)	3	20	Left side of engine compartment		
Under-hood fuse/relay box connector H (see page 22-64)	4	14	Left side of engine compartment		
C301	6	1	Left side of engine compartment	Engine compartment wire harness (see page 22-32)	USA
C301	6	2	Left front fenderwell	Engine compartment wire harness (see page 22-32)	Canada
C305 (Junction connector)	7	5	Left side of engine compartment		Canada
G301	9		Left front fenderwell	Body ground, via front engine compartment wire harness	

Protected by AR

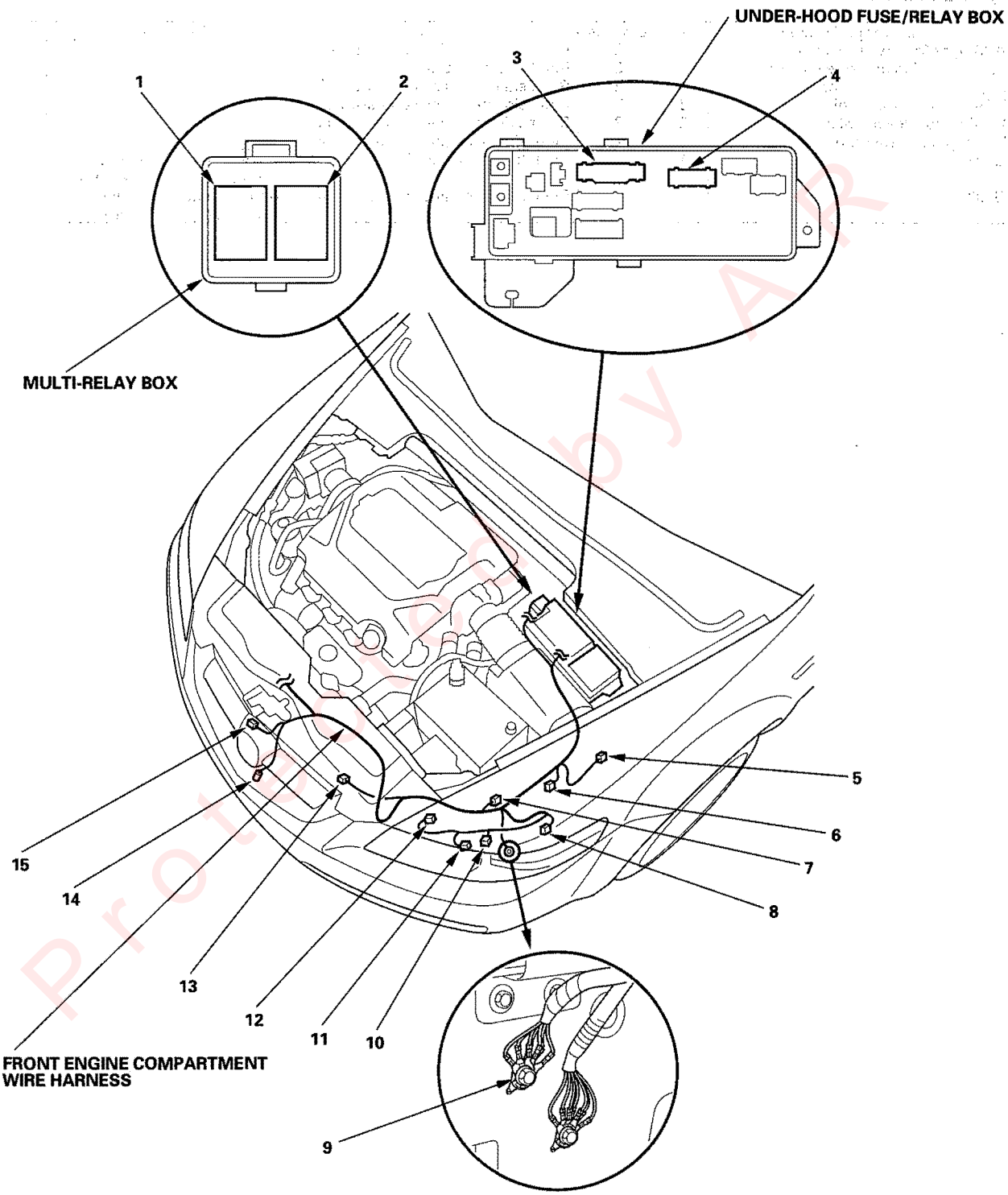

Protected by AR

Connector to Harness Index (cont'd)

Engine Compartment Wire Harness (Right branch)

Connector or Terminal	Ref	Cavities	Location	Connects to	Notes
ABS right front wheel sensor	8	2	Right side of engine compartment		
Power steering pressure (PSP) switch	7	2	Right side of engine compartment		
Right front airbag sensor	4	2	Right side of engine compartment		
VSA modulator-control unit	6	47	Right side of engine compartment		
Washer fluid level switch	2	2	Right side of engine compartment		Canada
Windshield washer motor	3	2	Right side of engine compartment		
G202	1		Right front fenderwell	Body ground, via engine compartment wire harness	
G203	5		Right side of engine compartment	Body ground, via engine compartment wire harness	

Protected by A

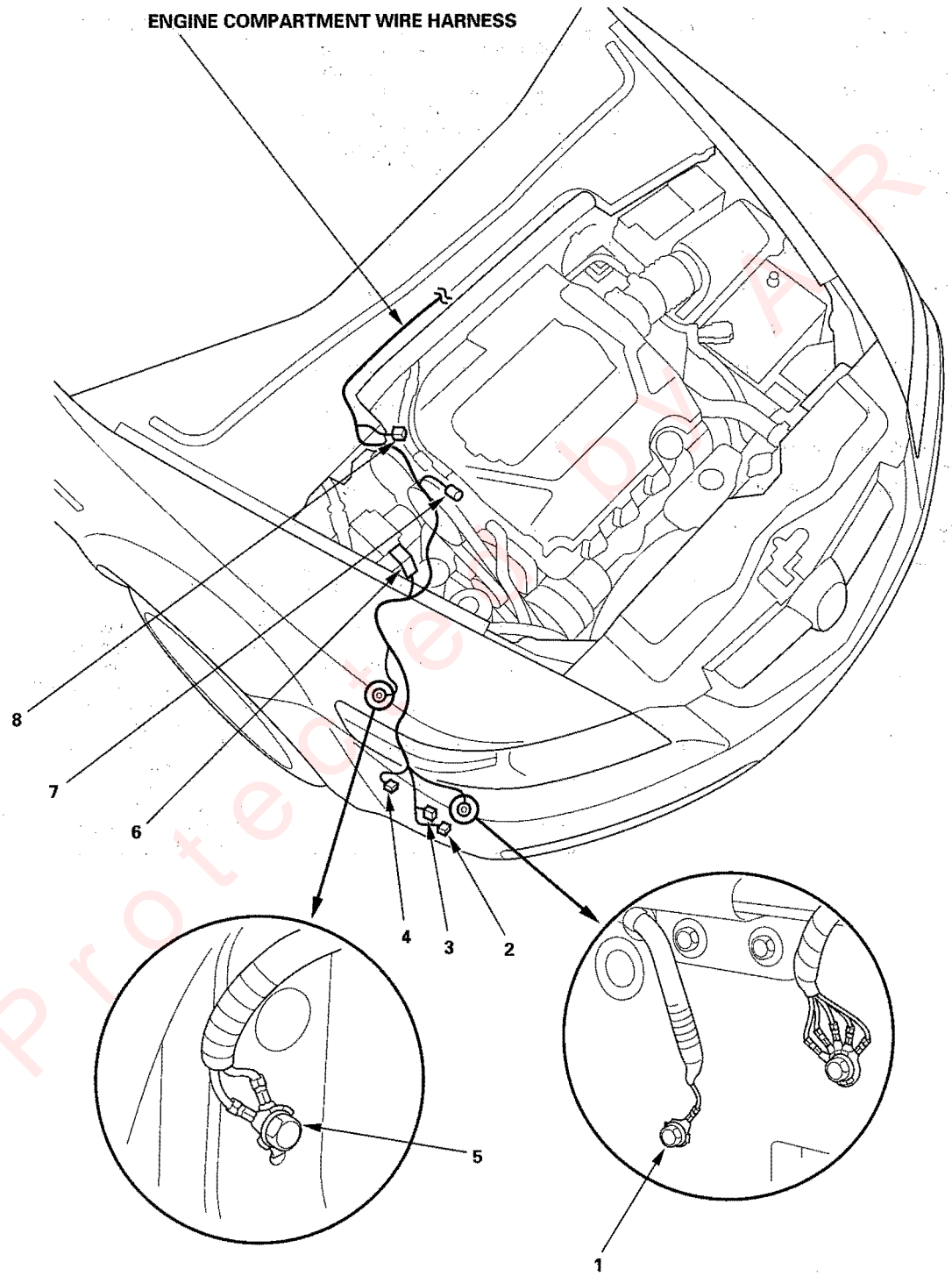

(cont'd)

Connector to Harness Index (cont'd)

Engine Compartment Wire Harness (M/T) (Left branch)

Connector or Terminal	Ref	Cavities	Location	Connects to	Notes
ABS left front wheel sensor	8	2	Left side of engine compartment		
Brake fluid level switch	9	2	Left side of engine compartment		
Diode (for radiator fan relay)	11	2	Under left side of dash		
Keyless buzzer	19	2	Left side of engine compartment		
Left front airbag sensor	22	2	Left side of engine compartment		
Left side marker light	18	2	Left side of engine compartment		
Under-dash fuse/relay box connector B (see page 22-66)	16	6	Under left side of dash		
Under-dash fuse/relay box connector C (see page 22-66)	15	12	Under left side of dash		
Under-dash fuse/relay box connector D (see page 22-66)	17	17	Under left side of dash		
Under-hood fuse/relay box connector A (ELD unit) (see page 22-64)	6	3	In under-hood fuse/relay box		
Under-hood fuse/relay box connector C (see page 22-64)	1	2	Behind under-hood fuse/relay box		
Under-hood fuse/relay box connector D (see page 22-64)	7	9	Behind under-hood fuse/relay box		
Under-hood fuse/relay box connector E (see page 22-64)	2	16	Behind under-hood fuse/relay box		
Under-hood fuse/relay box connector G (see page 22-64)	5	2	Behind under-hood fuse/relay box		
Under-hood fuse/relay box connector J (see page 22-64)	3	5	Behind under-hood fuse/relay box		
Under-hood fuse/relay box connector W (see page 22-64)	4	10	Behind under-hood fuse/relay box		
Windshield wiper motor	10	5	Left side of engine compartment		
C153	20	1	Left side of engine compartment	Engine wire harness (see page 22-16)	
C301	21	1	Left side of engine compartment	Front engine compartment wire harness (see page 22-29)	USA
C301	21	2	Left side of engine compartment	Front engine compartment wire harness (see page 22-29)	Canada
C302	13	22	Under left side of dash	Dashboard wire harness (see page 22-38)	
C303	12	14	Under left side of dash	Dashboard wire harness (see page 22-38)	
C304	14	4	Under left side of dash	Dashboard wire harness (see page 22-38)	
G302	23		Left front fenderwell	Body ground, via engine compartment wire harness	

Protected by A R

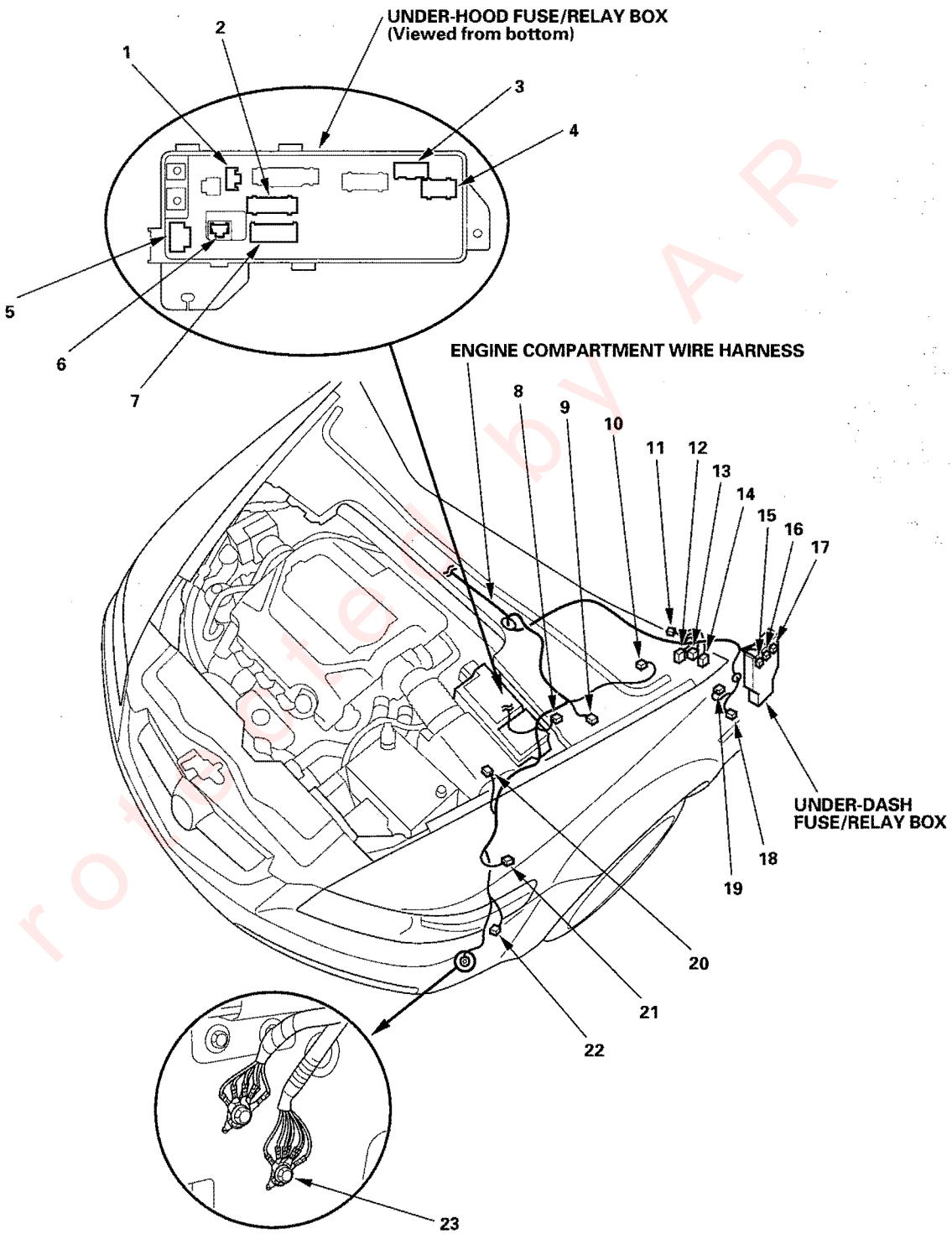

Protected by AR

(cont'd)

Connector to Harness Index (cont'd)

Engine Compartment Wire Harness (A/T) (Left branch)

Connector or Terminal	Ref	Cavities	Location	Connects to	Notes
ABS left front wheel sensor	8	2	Left side of engine compartment		
Brake fluid level switch	9	2	Left side of engine compartment		
Diode (for radiator fan relay)	11	2	Under left side of dash		
Keyless buzzer	19	2	Left side of engine compartment		
Left front airbag sensor	22	2	Left side of engine compartment		
Left side marker light	18	2	Left side of engine compartment		
Under-dash fuse/relay box connector B (see page 22-66)	16	6	Under left side of dash		
Under-dash fuse/relay box connector C (see page 22-66)	15	12	Under left side of dash		
Under-dash fuse/relay box connector D (see page 22-66)	17	17	Under left side of dash		
Under-hood fuse/relay box connector A (ELD unit) (see page 22-64)	6	3	In under-hood fuse/relay box		
Under-hood fuse/relay box connector C (see page 22-64)	1	2	Behind under-hood fuse/relay box		
Under-hood fuse/relay box connector D (see page 22-64)	7	9	Behind under-hood fuse/relay box		
Under-hood fuse/relay box connector E (see page 22-64)	2	16	Behind under-hood fuse/relay box		
Under-hood fuse/relay box connector G (see page 22-64)	5	2	Behind under-hood fuse/relay box		
Under-hood fuse/relay box connector J (see page 22-64)	3	5	Behind under-hood fuse/relay box		
Under-hood fuse/relay box connector K (see page 22-64)	4	10	Behind under-hood fuse/relay box		
Windshield wiper motor	10	5	Left side of engine compartment		
C153	20	1	Left side of engine compartment	Engine wire harness (see page 22-16)	
C301	21	1	Left side of engine compartment	Front engine compartment wire harness (see page 22-29)	USA
C301	21	2	Left side of engine compartment	Front engine compartment wire harness (see page 22-29)	Canada
C302	13	22	Under left side of dash	Dashboard wire harness (see page 22-38)	
C303	12	14	Under left side of dash	Dashboard wire harness (see page 22-38)	
C304	14	4	Under left side of dash	Dashboard wire harness (see page 22-38)	
G302	23		Left front fenderwell	Body ground, via engine compartment wire harness	

Protected by AR

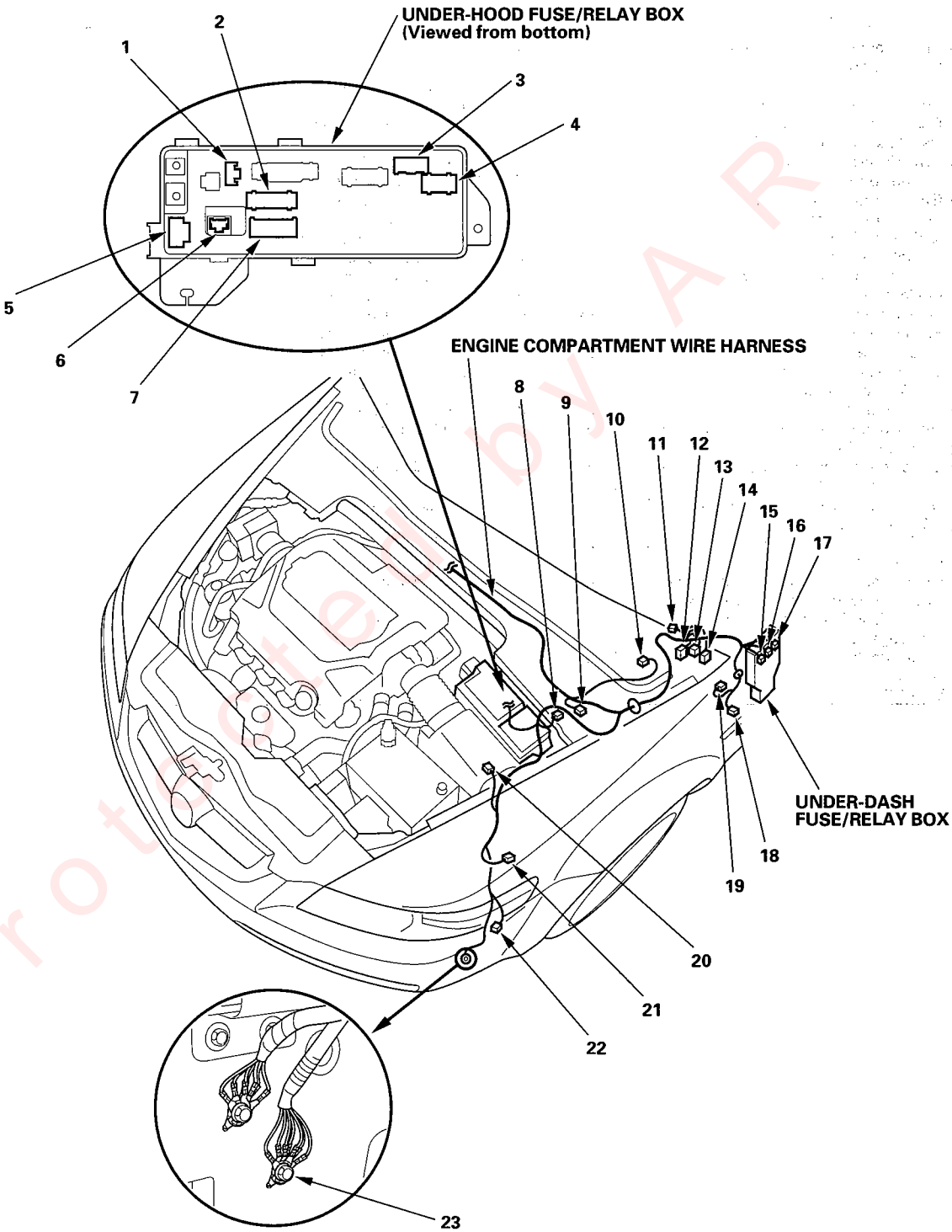

Protected by A R

Connector to Harness Index (cont'd)

Dashboard Wire Harness (Left branch)

Connector or Terminal	Ref	Cavities	Location	Connects to	Notes
Brake pedal position switch	35	4	Under left side of dash		
Clutch interlock switch	40	2	Under left side of dash		
Clutch pedal position switch	41	3	Under left side of dash		
Combination switch control unit	27	8	In steering column cover		
Dash lights brightness controller	34	6	Under left side of dash		
Data link connector (DLC)	12	16	Under left side of dash		
Driver's airbag inflator	33	4	In steering column cover		
Gauge control module connector A	21	30	Behind gauge assembly		
Gauge control module connector B	23	18	Behind gauge assembly		
Ignition key switch	29	6	In steering column cover		
Ignition switch	31	7	In steering column cover		
Immobilizer control unit-receiver	28	7	In steering column cover		
In-car temperature sensor	32	2	Under left side of dash		
Keyless receiver unit	17	5	Under left side of dash		
Power mirror control unit	36	26	Under left side of dash		
Power mirror switch	37	13	Under left side of dash		
Select/reset/information switch	26	6	Under left side of dash		
Steering angle sensor	22	5	In steering column cover		
Trunk lid opener switch	42	5	Under left side of dash		
Tweeter (left side)	16	2	Left side of dash		
Under-dash fuse/relay box connector A (see page 22-66)	4	6	Left kick panel		
Under-dash fuse/relay box connector N (see page 22-66)	5	45	Left kick panel		
Under-dash fuse/relay box connector P (MICU) (see page 22-66)	1	30	Left kick panel		
Under-dash fuse/relay box connector Q (MICU) (see page 22-66)	2	14	Left kick panel		
Under-dash fuse/relay box connector R (MES connector) (see page 22-66)	6	2	Left kick panel		
Under-dash fuse/relay box connector S (see page 22-66)	7	2	Left kick panel		
Under-dash fuse/relay box connector X (see page 22-66)	3	39	Left kick panel		
VSA OFF switch	38	5	Under left side of dash		

Protected by AR

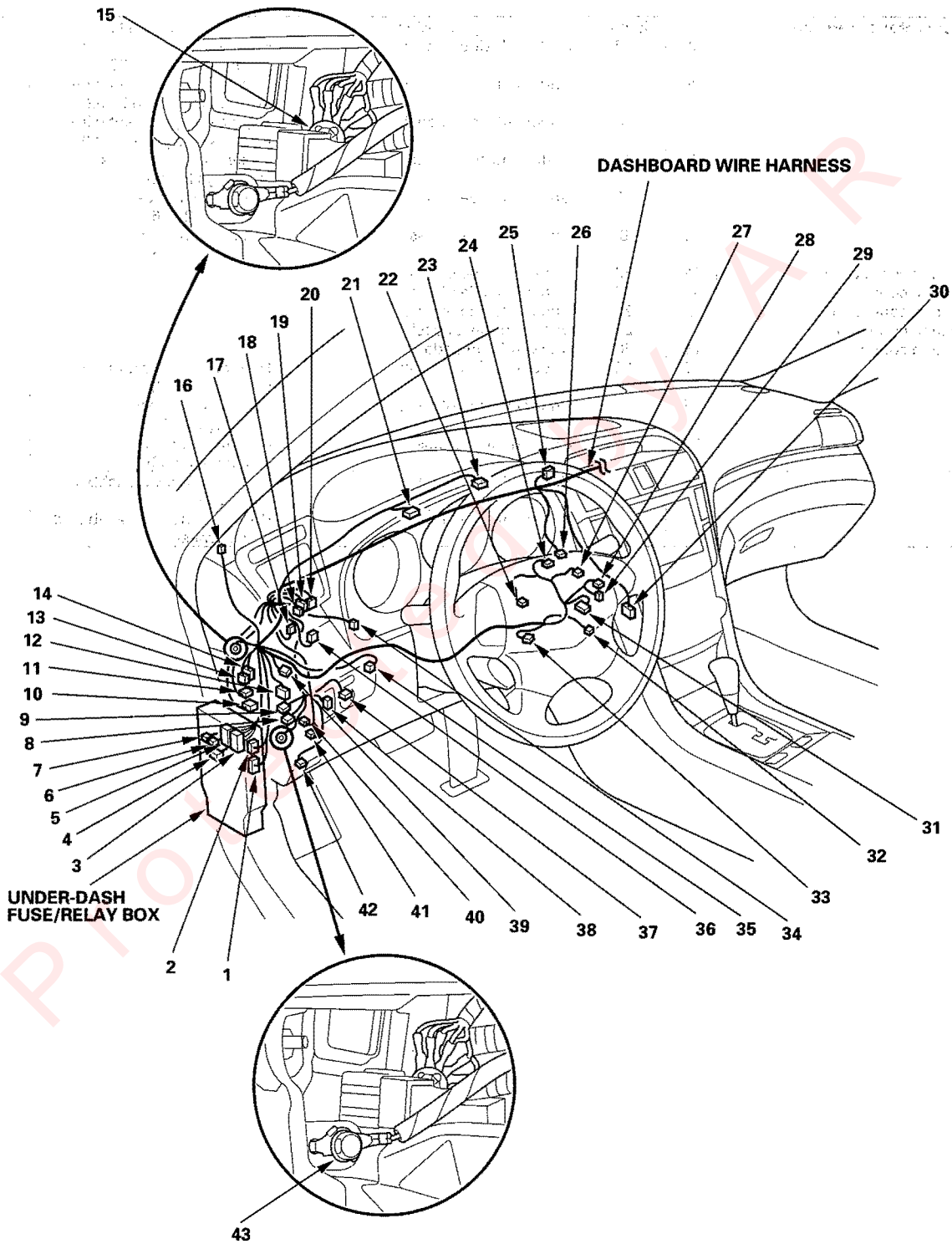
15
DASHBOARD WIRE HARNESS
24
25
26
27
28
29
30
23
22
21
20
19
18
17
16
14
13
12
11
10
9
8
7
6
5
4
3
UNDER-DASH
FUSE/RELAY BOX
2
1
42
41
40
39
38
37
36
35
34
33
32
31
43

(cont'd)

Connector to Harness Index (cont'd)

Dashboard Wire Harness (Left branch) (cont'd)

Connector or Terminal	Ref	Cavities	Location	Connects to	Notes
C302	19	22	Under left side of dash	Engine compartment wire harness (see page 22-32)	
C303	20	14	Under left side of dash	Engine compartment wire harness (see page 22-32)	
C304	18	4	Under left side of dash	Engine compartment wire harness (see page 22-32)	
C451	24	13	In steering column cover	Cable reel subharness (see page 22-26)	
C501	14	20	Under left side of dash	Floor wire harness (see page 22-46)	
C502	13	8	Under left side of dash	Floor wire harness (see page 22-46)	
C506 (Junction connector)	39	20	Under left side of dash		
C507 (Junction connector)	8	28	Under left side of dash		
C508 (Junction connector)	9	28	Under left side of dash		
C509 (Junction connector)		28	Under middle of dash		
C510 (Junction connector)	25	20	Under middle of dash		
C634	10	12	Under left side of dash	Driver's door subharness (see page 22-52)	
C651	11	16	Under left side of dash	Roof wire harness (see page 22-50)	
C851	30	14	Under middle of dash	A/C wire harness (see page 22-63)	
G501	15		Under left side of dash	Body ground, via dashboard wire harness	
G502	43		Under left side of dash	Body ground, via dashboard wire harness	

Protected by AK

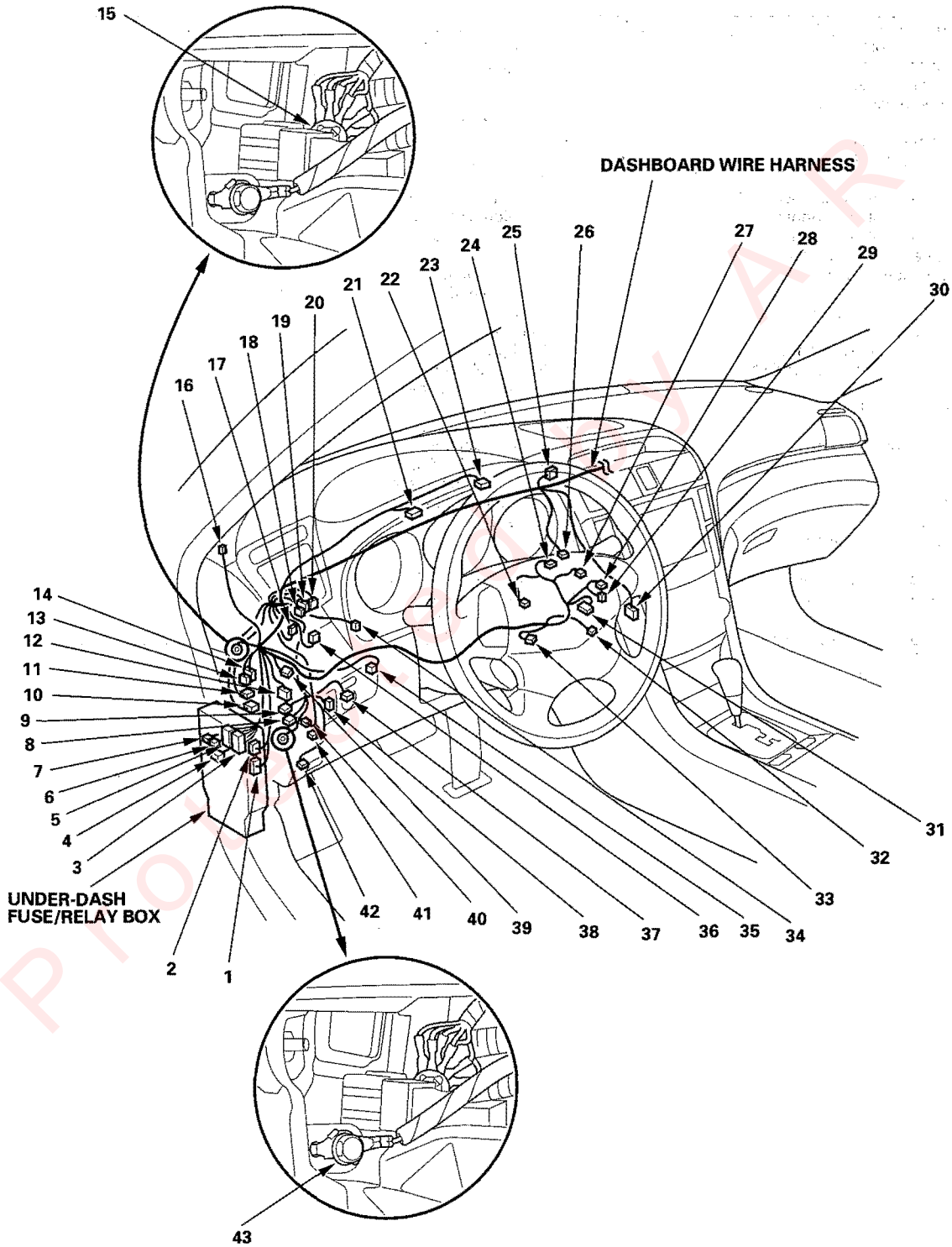
DASHBOARD WIRE HARNESS
UNDER-DASH FUSE/RELAY BOX
1
2
3
4
5
6
7
8
9
10
11
12
13
14
15
16
17
18
19
20
21
22
23
24
25
26
27
28
29
30
31
32
33
34
35
36
37
38
39
40
41
42
43

(cont'd)

Connector to Harness Index (cont'd)

Dashboard Wire Harness (Right branch)

Connector or Terminal	Ref	Cavities	Location	Connects to	Notes
A/T shift lock solenoid	37	2	Under console panel		
Audio amplifier connector A	20	14	Under right side of dash		
Audio amplifier connector B	19	20	Under right side of dash		
Audio-HVAC subdisplay-clock	9	10	Middle of dash		1
Clock	9	5	Middle of dash		2
Audio unit connector A	4	20	Middle of dash		
Audio unit connector B	3	14	Middle of dash		
Audio unit connector C	2	26	Middle of dash		
Display panel control unit connector A	6	14	Under middle of dash		
Display panel control unit connector B	7	6	Under middle of dash		
Display panel control unit connector E	5	22	Under middle of dash		
Cigarette lighter light (optional)	34	2	Middle of dash		
Driver's seat heater switch	41	6	Under console panel		
ECM/PCM connector A	30	31	Under middle of dash		
Front accessory power socket	33	2	Under console panel		
Front center speaker	10	2	Middle of dash		
Front passenger's airbag inflator	29	4	Under right side of dash		
Front passenger's seat heater switch	40	6	Under console panel		
Glove box light	17	2	Under right side of dash		
Hazard warning switch	8	5	Middle of dash		
Parking brake switch	42	1	Behind rear console		
Rear accessory power socket	44	2	Behind rear console		
Seat heater relay	13	4	Under right side of dash		
Shift lock relay	28	5	Under right side of dash		
SRS unit connector A	35	28	Under console panel		
Sunlight sensor	14	2	Middle of dash		
Transmission gear selection switch/ Park pin switch	39	8	Under console panel		
Throttle actuator control module relay	15	4	Under right side of dash		
Trunk lid opener main switch	16	2	Under right side of dash		
Tweeter (right)	18	2	Right side of dash		
Yaw rate-lateral acceleration sensor	36	5	Under console panel		

1: With navigation system
2: Without navigation system

Protected by A R

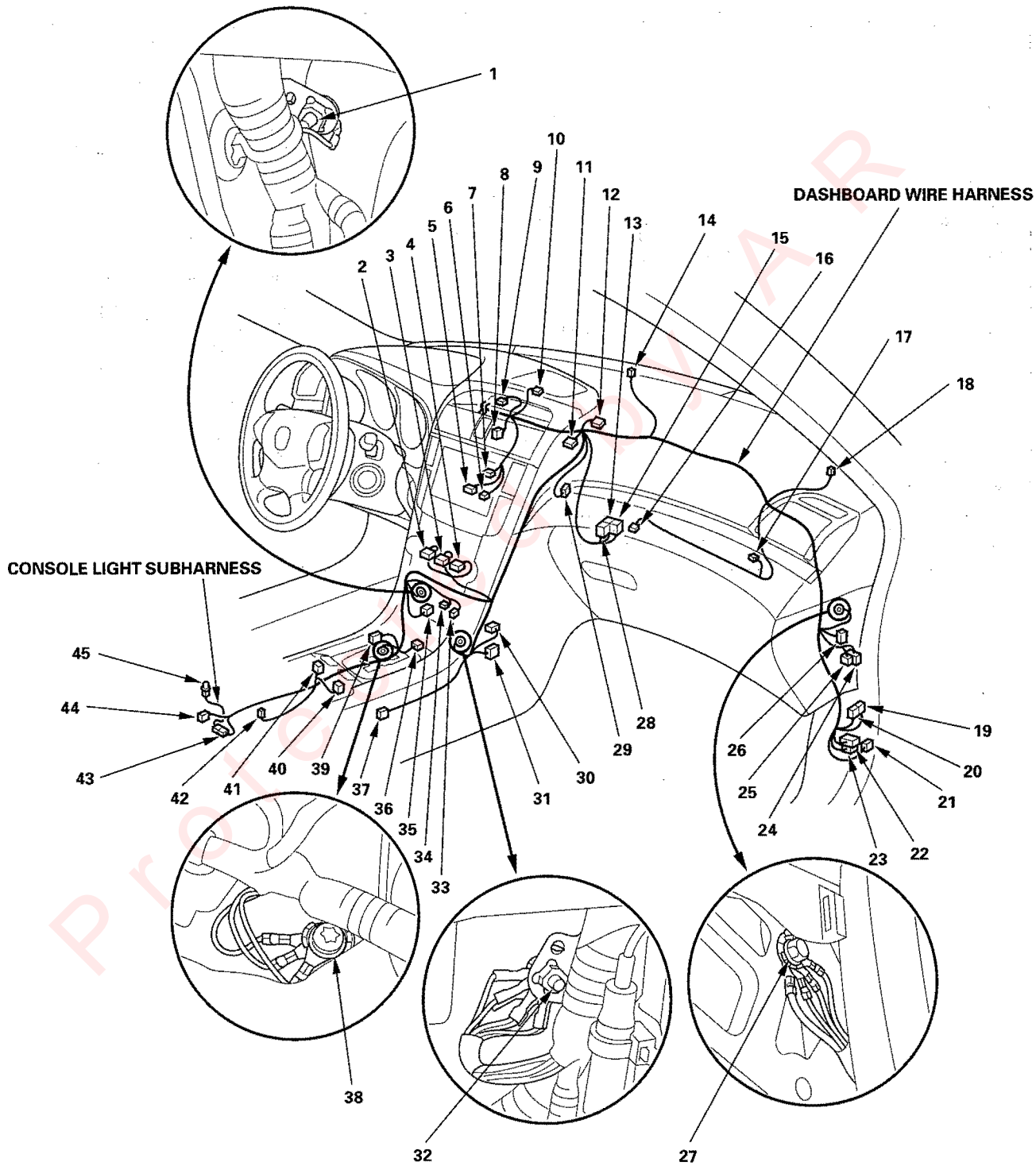
DASHBOARD WIRE HARNESS
CONSOLE LIGHT SUBHARNESS
1
2
3
4
5
6
7
8
9
10
11
12
13
14
15
16
17
18
19
20
21
22
23
24
25
26
27
28
29
30
31
32
33
34
35
36
37
38
39
40
41
42
43
44
45

(cont'd)

Connector to Harness Index (cont'd)

Dashboard Wire Harness (Right branch) (cont'd)

Connector or Terminal	Ref	Cavities	Location	Connects to	Notes
C171	31	17	Under middle of dash	ECM/PCM wire harness (see page 22-26)	
C503	22	12	Under right side of dash	Floor wire harness (see page 22-46)	
C504	23	17	Under right side of dash	Floor wire harness (see page 22-46)	
C505	21	3	Under right side of dash	Floor wire harness (see page 22-46)	
C511 (Junction connector)	11	20	Under right side of dash		
C512 (Junction connector)	12	28	Under right side of dash		
C513 (Junction connector)	26	28	Under right side of dash		
C514	43	2	Behind rear console	Console light subharness	
C731	25	13	Under right side of dash	Front passenger's door subharness (see page 22-54)	
C732	24	14	Under right side of dash	Front passenger's door subharness (see page 22-54)	
G503	32		Under console panel	Body ground, via dashboard wire harness	
G504	1		Under middle of dash	Body ground, via dashboard wire harness	
G505	38		Under middle of dash	Body ground, via dashboard wire harness	
G506	27		Under right side of dash	Body ground, via dashboard wire harness	

Console Light Subharness

Connector or Terminal	Ref	Cavities	Location	Connects to	Notes
Rear console light	45	——	Behind rear console		
C514	43	2	Behind rear console	Dashboard wire harness	

Protected by R

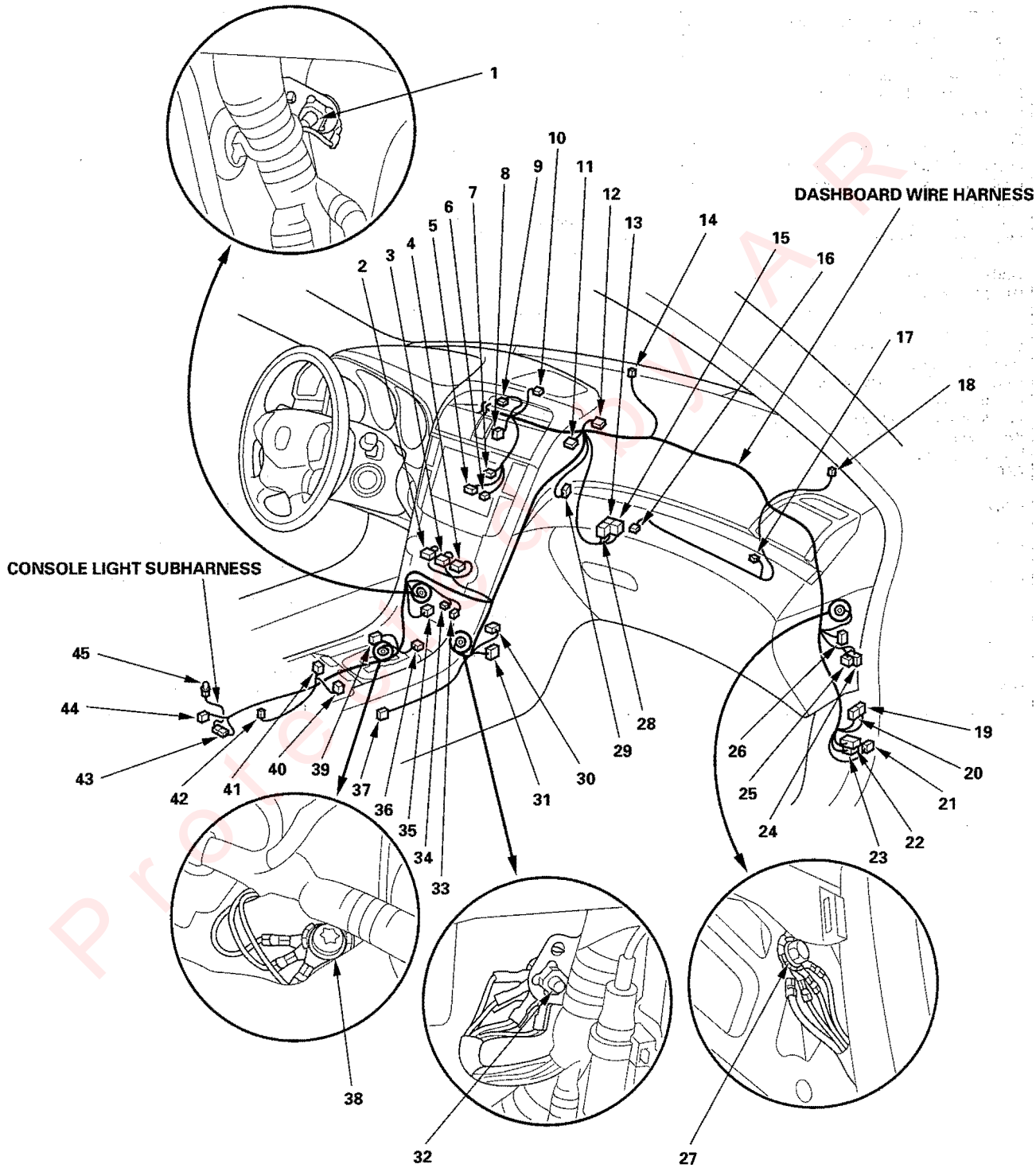

Protected by COPYRIGHT

Connector to Harness Index (cont'd)

Floor Wire Harness (Left branch)

Connector or Terminal	Ref	Cavities	Location	Connects to	Notes
ABS left rear wheel sensor	17	2	Under left side of vehicle		
Driver's door switch	25	1	Left B-pillar		
Driver's seat belt tensioner	22	2	Left B-pillar		
Driver's seat belt tension reducer solenoid	23	2	Left B-pillar		
Driver's side airbag inflator	20	2	Under driver's seat		
EVAP canister vent shut valve	19	2	Under left side of vehicle		
Fuel pump/fuel gauge sending unit	15	5	Fuel tank		
Fuel tank pressure (FTP) sensor	18	3	Under left side of vehicle		
Left rear door switch	16	1	Left C-pillar		
Left rear speaker	13	2	Left side of rear shelf		
Left side impact sensor	26	2	Under driver's seat		
Trunk light	11	2	Middle of rear shelf		
Under-dash fuse/relay box connector E (see page 22-66)	2	16	Under left side of dash		
Under-dash fuse/relay box connector F (see page 22-66)	1	14	Under left side of dash		
Under-dash fuse/relay box connector G (see page 22-66)	4	6	Under left side of dash		
Under-dash fuse/relay box connector H (see page 22-66)	3	14	Under left side of dash		
Window antenna amplifier connector A	8	1	Left C-pillar		
Window antenna amplifier connector B	9	1	Left C-pillar		
Woofer speaker	12	2	Middle of rear shelf		
C501	6	20	Under left side of dash	Dashboard wire harness (see page 22-38)	
C502	5	8	Under left side of dash	Dashboard wire harness (see page 22-38)	
C701	14	8	Left C-pillar	Rear wire harness (see page 22-51)	
C751	24	8	Left B-pillar	Left rear door wire harness (see page 22-55)	
C901	21	16	Under driver's seat	Driver's seat wire harness (see page 22-58)	
G601	7		Under driver's seat	Body ground, via floor wire harness	
G603	10		Beside of fuel pump connector	Body ground, via floor wire harness	

Protected by AR

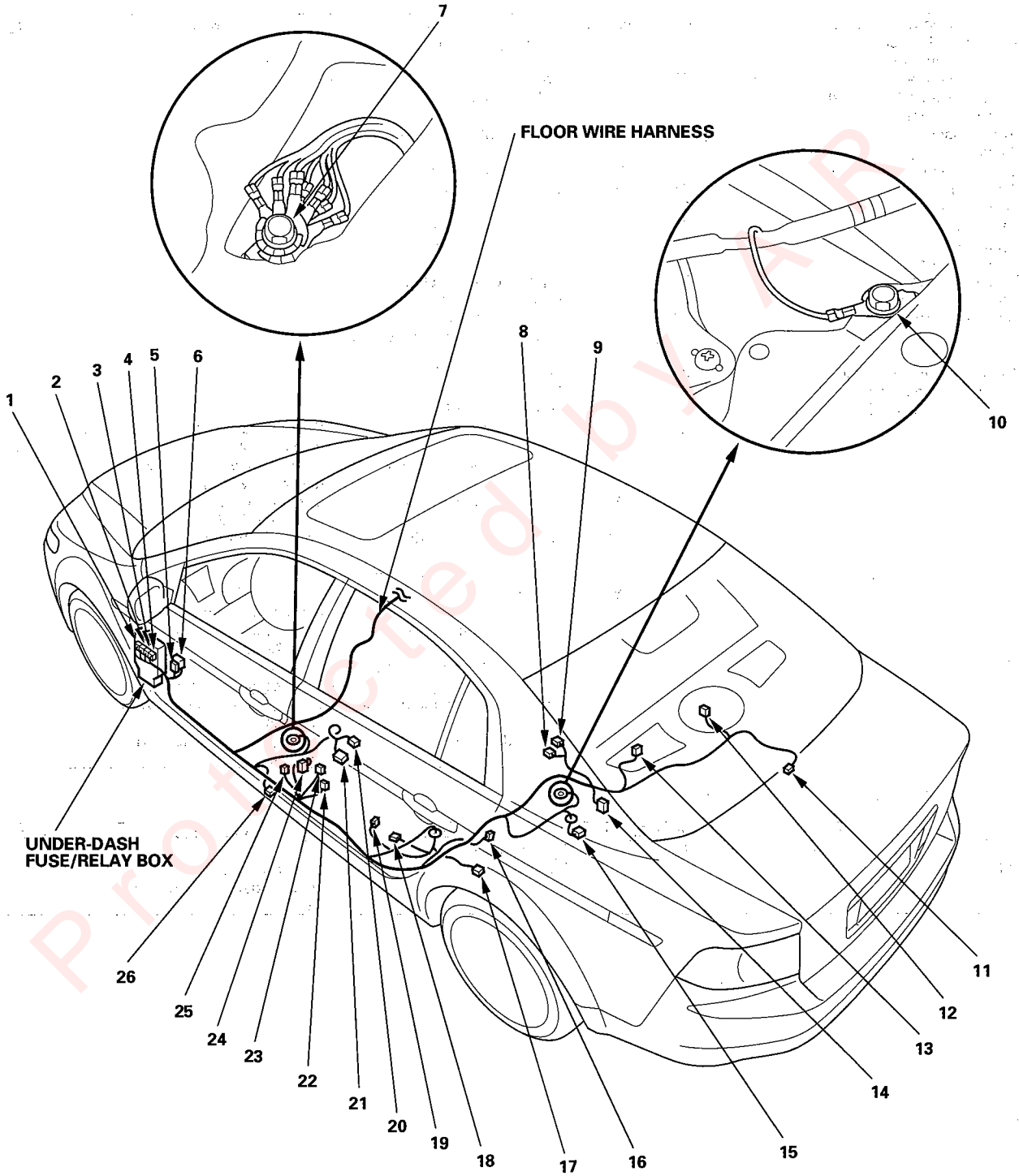

Protected by AR

(cont'd)

Connector to Harness Index (cont'd)

Floor Wire Harness (Right branch)

Connector or Terminal	Ref	Cavities	Location	Connects to	Notes
ABS right wheel sensor	19	2	Under right side of vehicle		
Front passenger's door switch	12	1	Right B-pillar		
Front passenger's seat belt tensioner	17	4	Right B-pillar		
Front passenger's seat belt tension reducer solenoid	16	2	Right B-pillar		
Front passenger's side airbag inflator	6	2	Under front passenger's seat		
Navigation inspection connector	28	2	Right side of trunk		
Navigation unit connector A	23	20	Right side of trunk		
Navigation unit connector B	25	8	Right side of trunk		
Navigation unit connector C	22	14	Right side of trunk		
Navigation unit connector D	24	5	Right side of trunk		
Right brake/taillight	29	3	Right side of trunk		
Right rear door switch	18	1	Right C-pillar		
Right rear speaker	31	2	Right side of rear shelf		
Right rear side marker light	26	2	Right side of trunk		
Right rear turn signal light	30	2	Right side of trunk		
Right side impact sensor	13	2	Under front passenger's seat		
XM receiver	21	14	Right side of trunk		
XM receiver feeder cable A	20	———	Right side of trunk		
XM receiver feeder cable B	2	———	Roof		
SRS unit connector B	4	28	Under middle of dash		
C503	8	12	Under right side of dash	Dashboard wire harness (see page 22-38)	Without Navigation
C504	10	17	Under right side of dash	Dashboard wire harness (see page 22-38)	
C505	9	3	Under right side of dash	Dashboard wire harness (see page 22-38)	
C601	11	13	Under right side of dash	Roof wire harness (see page 22-50)	
C602 (Junction connector)	15	24	Under front passenger's seat		
C781	14	8	Right B-pillar	Right rear door wire harness (see page 22-56)	
C801	5	4	Under front passenger's seat	OPDS unit harness (see page 22-60)	
C951	3	10	Under front passenger's seat	Front passenger's seat wire harness (see page 22-57)	
G602	7		Under front passenger's seat	Body ground, via floor wire harness	
G604	27		Right side of trunk	Body ground, via floor wire harness	

Rear Window Defogger Ground Wire

Connector or Terminal	Ref	Cavities	Location	Connects to	Notes
Rear window defogger connector B (−)	32	1	Right C-pillar		
G801	1		Right C-pillar	Body ground, via rear window defogger ground wire	

Protected by AR

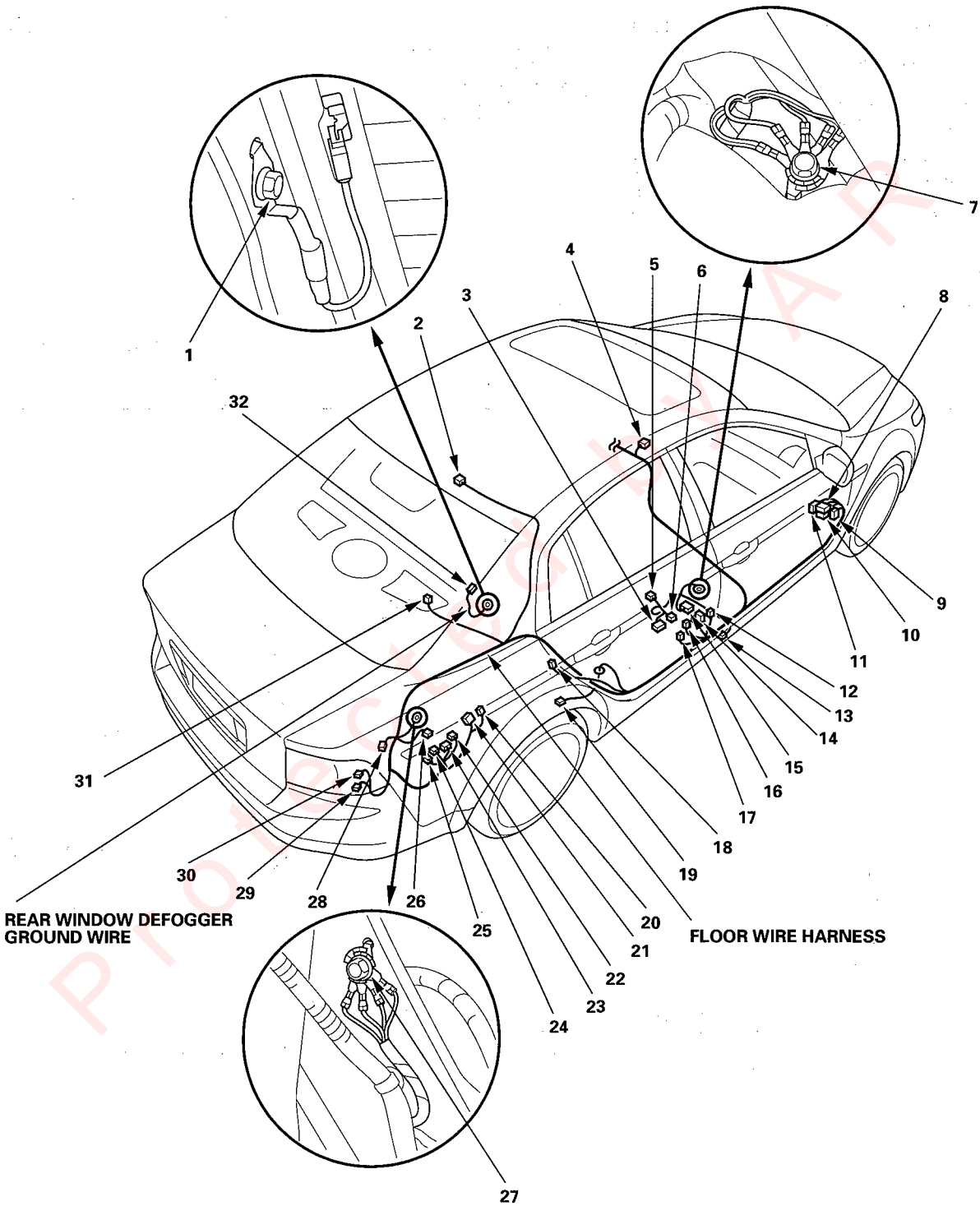

Protected by AR

Connector to Harness Index (cont'd)

Roof Wire Harness

Connector or Terminal	Ref	Cavities	Location	Connects to	Notes
Automatic dimming inside mirror	12	3	Behind rear view mirror		
Driver's vanity mirror light	11	2	Driver's sunvisor		
Driver's vanity mirror light switch	10	2	Driver's sunvisor		
Front passenger's vanity mirror light	4	2	Front passenger's sunvisor		
Front passenger's vanity mirror light switch	3	2	Front passenger's sunvisor		
HandsFreeLink control unit	5	22	Roof		
High mount brake light	7	2	Roof		
Moonroof switch	6	7	Roof		
Moonroof control unit	9	10	Roof		
Noise condenser (for high mount brake light)	15	2	Roof		
Rear map light	8	3	Roof		
Roof console	2	20	Roof		
Under-dash fuse/relay box connector W (see page 22-66)	14	5	Under left side of dash		
C601	1	13	Under right side of dash	Floor wire harness (see page 22-46)	* 1
C651	13	16	Under right side of dash	Dashboard wire harness (see page 22-38)	

* 1: With navigation

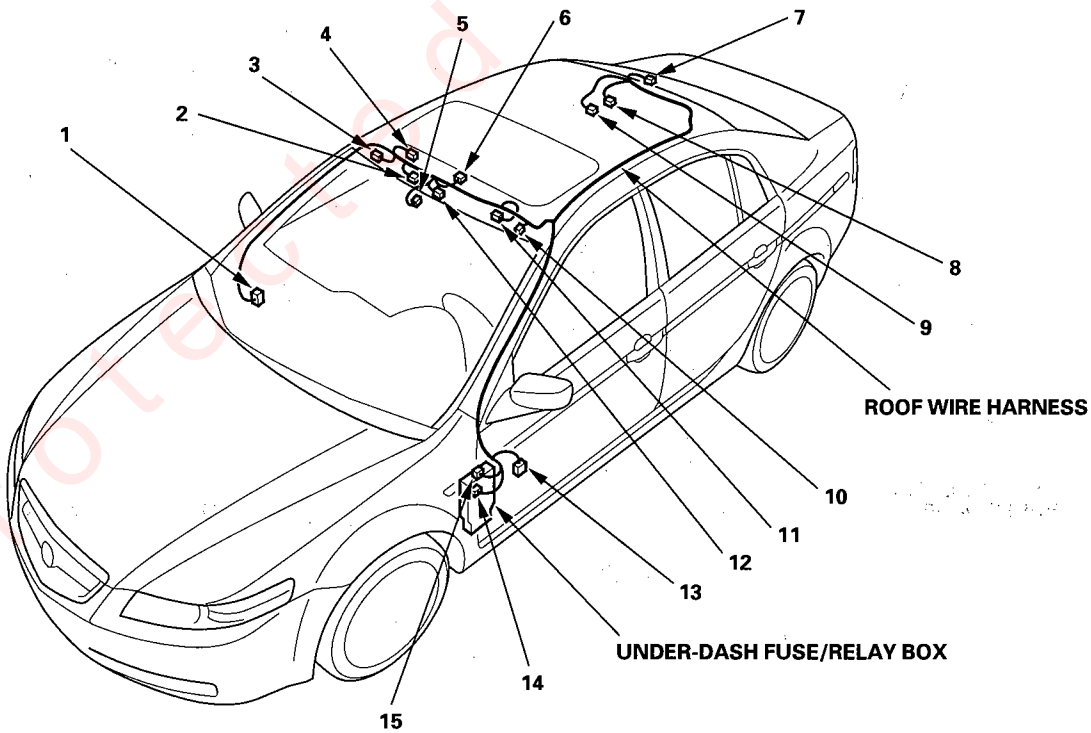

Protected by AR

Rear Wire Harness

Connector or Terminal	Ref	Cavities	Location	Connects to	Notes
Left back-up light	5	2	Left side of trunk		
Left license plate light	4	2	Middle of trunk		
Left rear side marker light	9	2	Left side of trunk		
Left rear turn signal light	7	2	Left side of trunk		
Left taillight/brake light	6	3	Left side of trunk		
Right back-up light	1	2	Right side of trunk		
Right license plate light	2	2	Middle of trunk		
Trunk lid latch switch/opener solenoid	3	3	Middle of trunk		
C701	10	8	Left side of trunk	Floor wire harness (see page 22-46)	
G701	8		Left side of trunk	Body ground, via rear wire harness	

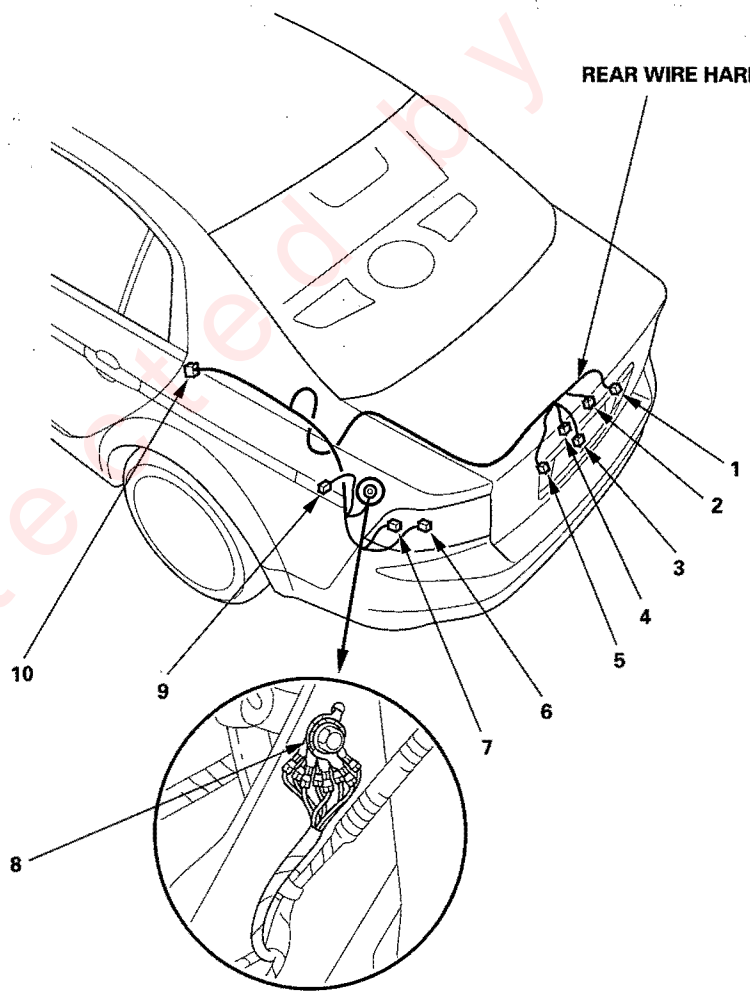

Protected by A R

Connector to Harness Index (cont'd)

Driver's Door Wire Harness A

Connector or Terminal	Ref	Cavities	Location	Connects to	Notes
Left power mirror	7	13	Driver's door		
Left speaker	13	2	Driver's door		
Door multiplex control unit connector A	2	22	Driver's door		
Door multiplex control unit connector B	3	14	Driver's door		
Driver's door key cylinder switch	15	3	Driver's door		
Driver's door lock actuator	17	2	Driver's door		
Driver's door lock knob switch	18	3	Driver's door		
Driver's door lock switch	4	5	Driver's door		
Driver's power window motor	14	6	Driver's door		
Driving position memory switch	5	10	Driver's door		
C631	8	20	Driver's door	Driver's door subharness	
C632	12	14	Driver's door	Driver's door subharness	
C633	1	4	Driver's door	Driver's door wire harness B	
C635 (Junction connector)	6	20	Driver's door		

Driver's Door Subharness

Connector or Terminal	Ref	Cavities	Location	Connects to	Notes
Under-dash fuse/relay box connector J (see page 22-66)	10	21	Under left side of dash		
Under-dash fuse/relay box connector K (see page 22-66)	11	12	Under left side of dash		
C631	8	20	Driver's door	Driver's door wire harness A	
C632	12	14	Driver's door	Driver's door wire harness A	
C634	9	12	Under left side of dash	Dashboard wire harness (see page 22-38)	

Driver's Door Wire Harness B

Connector or Terminal	Ref	Cavities	Location	Connects to	Notes
Driver's door courtesy light	16	2	Driver's door		
Security indicator	19	2	Driver's door		
C633	1	4	Driver's door	Driver's door wire harness A	

Protected by AR

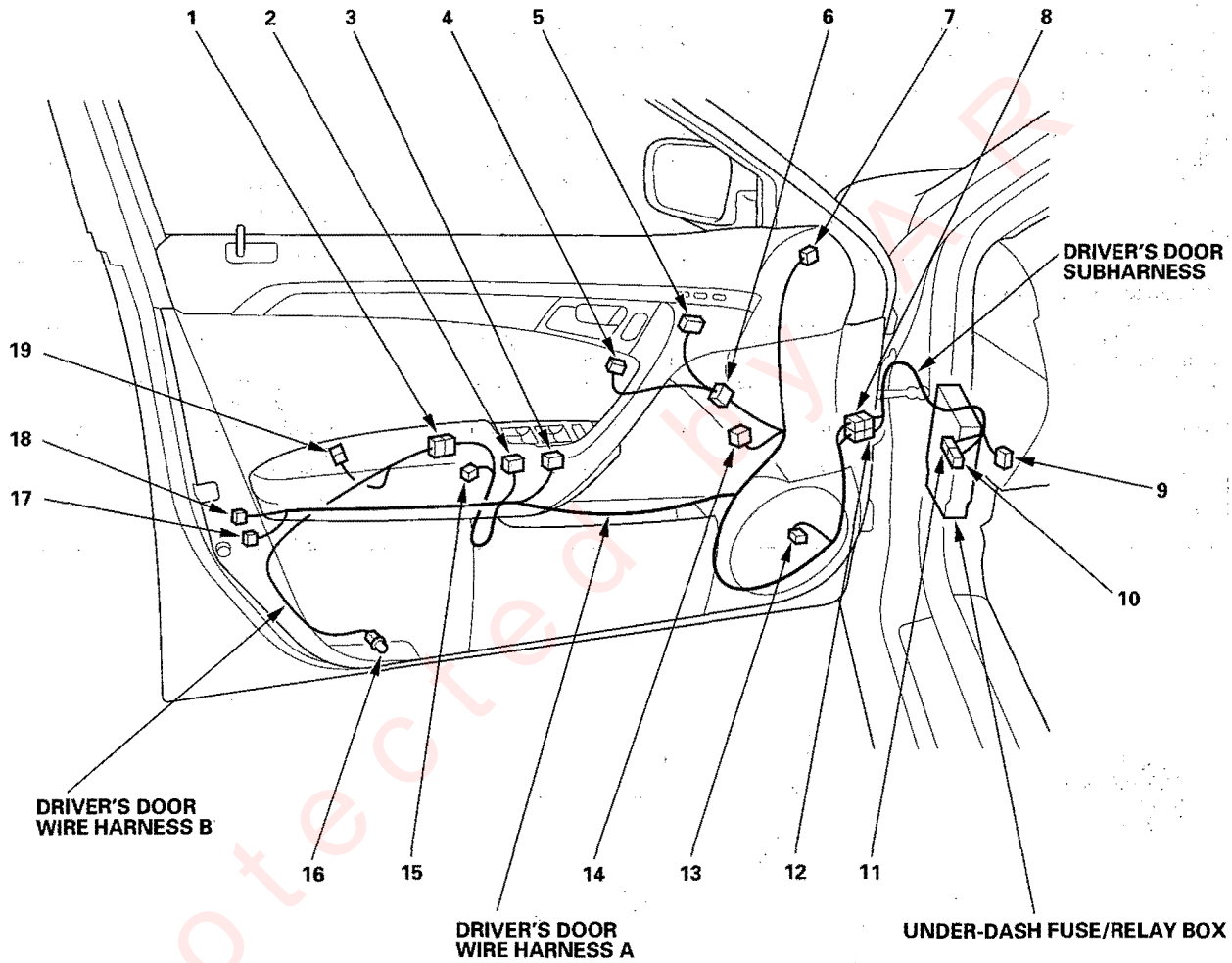

Protected by ARR

Connector to Harness Index (cont'd)

Front Passenger's Door Wire Harness

Connector or Terminal	Ref	Cavities	Location	Connects to	Notes
Front passenger's door courtesy light	9	2	Front passenger's door		
Front passenger's door lock actuator	8	2	Front passenger's door		
Front passenger's door lock knob switch	7	3	Front passenger's door		
Front passenger's door lock switch	5	5	Front passenger's door		
Front passenger's power window switch	6	14	Front passenger's door		
Front passenger's power window motor	4	6	Front passenger's door		
Right power mirror	3	13	Front passenger's door		
Right speaker	10	2	Front passenger's door		
C733	2	20	Front passenger's door	Front passenger's door subharness	
C734	11	14	Front passenger's door	Front passenger's door subharness	

Front Passenger's Door Subharness

Connector or Terminal	Ref	Cavities	Location	Connects to	Notes
Right side marker light	1	2	Right fender		
C731	12	13	Under right side of dash	Dashboard wire harness (see page 22-38)	
C732	13	14	Under right side of dash	Dashboard wire harness (see page 22-38)	
C733	2	20	Front passenger's door	Front passenger's door wire harness	
C734	11	14	Front passenger's door	Front passenger's door wire harness	

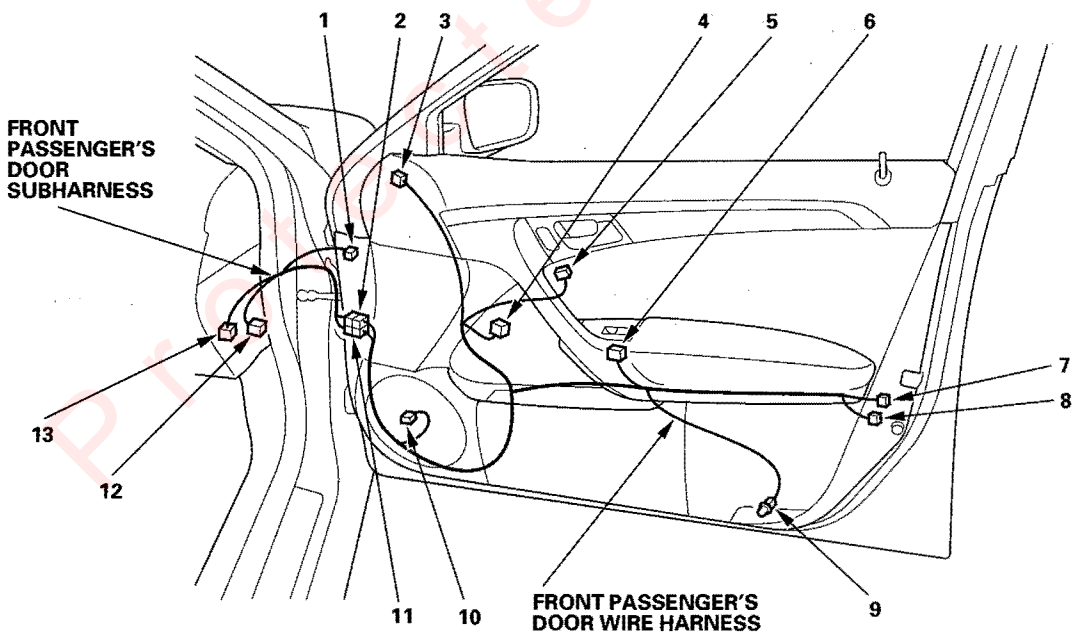

Printed by AR

Left Rear Door Wire Harness

Connector or Terminal	Ref	Cavities	Location	Connects to	Notes
Left rear door lock actuator	4	2	Left rear door		
Left rear door lock knob switch	5	3	Left rear door		
Left rear power window switch	1	6	Left rear door		
Left rear power window motor	2	6	Left rear door		
C751	3	8	Left B-pillar	Floor wire harness (see page 22-46)	

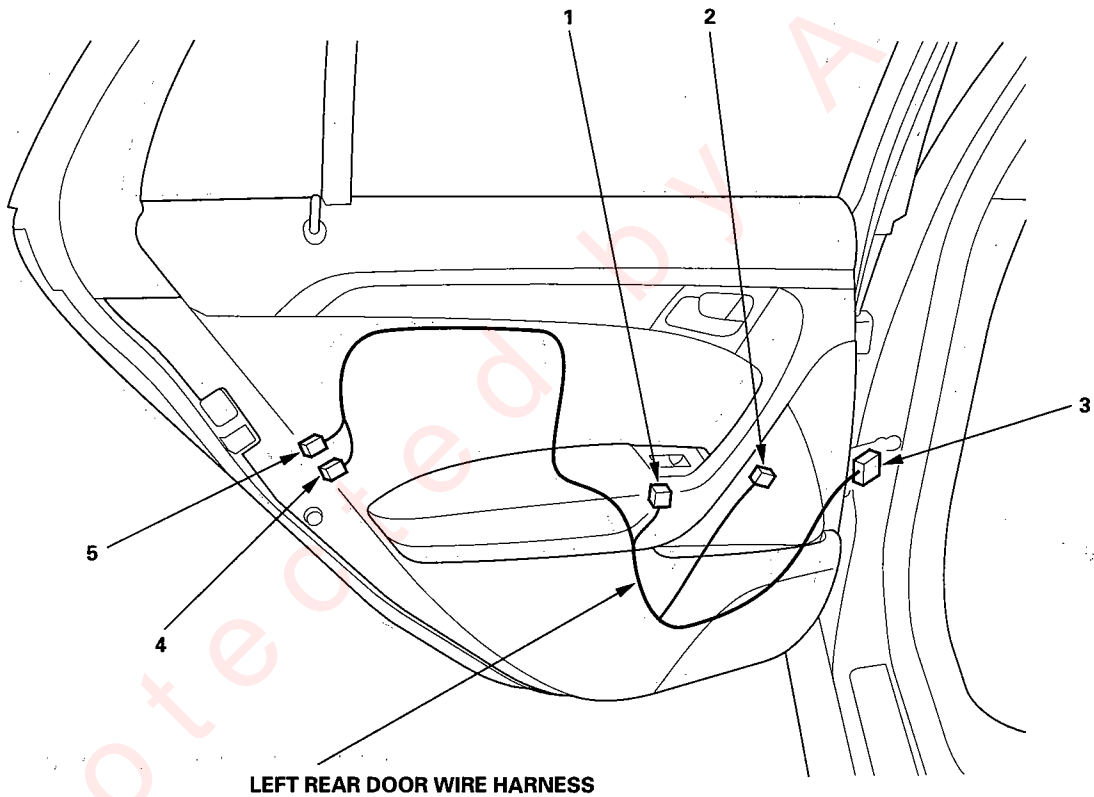

LEFT REAR DOOR WIRE HARNESS

Protected by AR

Connector to Harness Index (cont'd)

Right Rear Door Wire Harness

Connector or Terminal	Ref	Cavities	Location	Connects to	Notes
Right rear door lock actuator	4	2	Right rear door		
Right rear door lock knob switch	3	3	Right rear door		
Right rear power window switch	2	6	Right rear door		
Right rear power window motor	1	6	Right rear door		
C781	5	8	Right B-pillar	Floor wire harness (see page 22-46)	

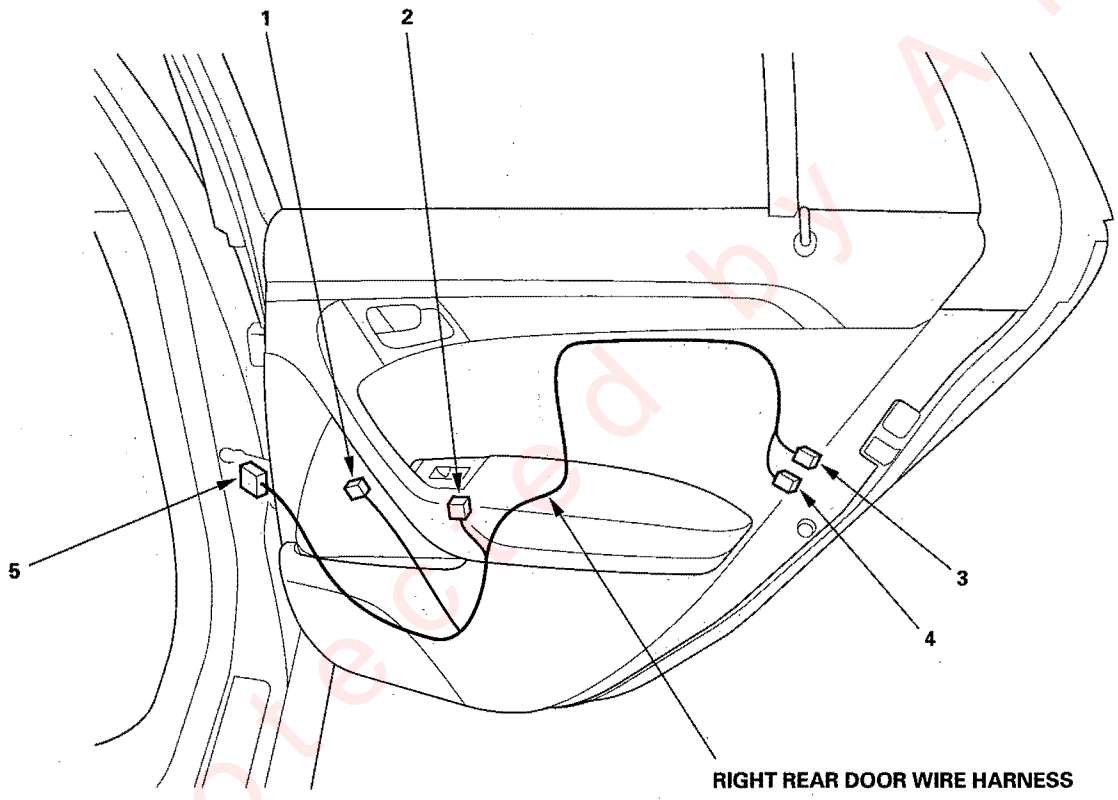

RIGHT REAR DOOR WIRE HARNESS

Protected by AR

Front Passenger's Seat Wire Harness

Connector or Terminal	Ref	Cavities	Location	Connects to	Notes
Front passenger's power seat adjustment switch	5	12	Right side of front passenger's seat		
Front passenger's power seat slide motor	2	2	Under front passenger's seat		
Front passenger's seat belt buckle switch	1	3	Front passenger's seat		
Front passenger's seat heater	3	3	Front passenger's seat		
C951	4	10	Under front passenger's seat	Floor wire harness (see page 22-46)	
C952	6	2	Under front passenger's seat	Front passenger's seat subharness	

Front Passenger's Seat Subharness

Connector or Terminal	Ref	Cavities	Location	Connects to	Notes
Front passenger's power seat recline motor	7	2	Front passenger's seat		
C952	6	2	Front passenger's seat	Front passenger's seat wire harness	

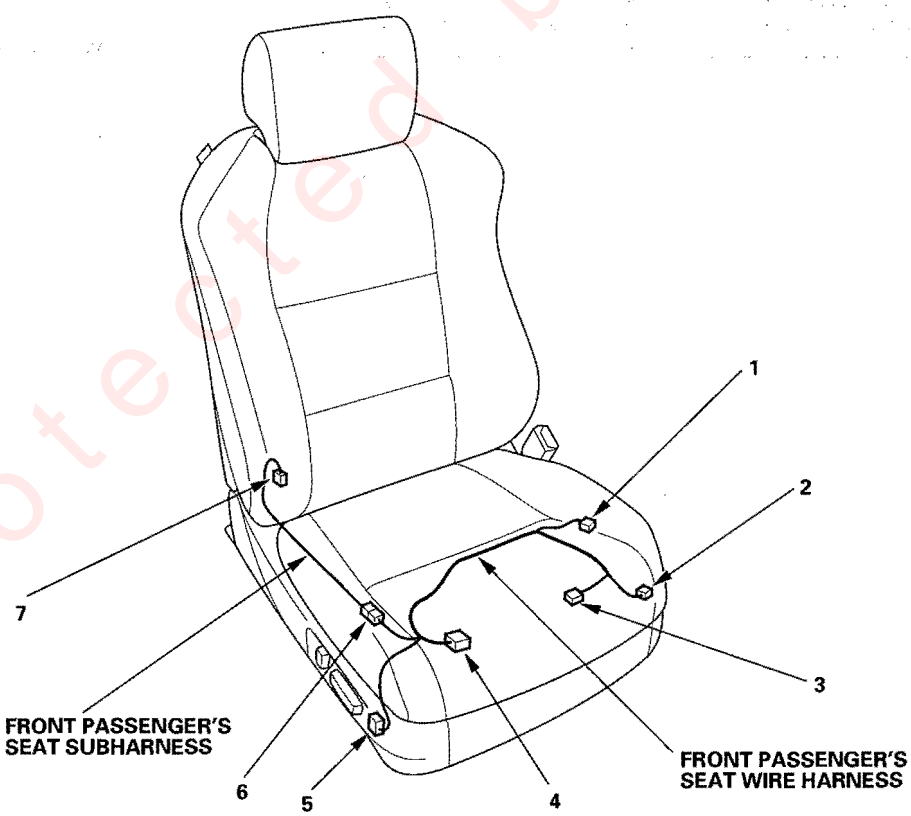

Protected by AR

Connector to Harness Index (cont'd)

Driver's Seat Wire Harness

Connector or Terminal	Ref	Cavities	Location	Connects to	Notes
Driver's power seat adjustment switch	4	12	Left side of driver's seat		
Driver's power seat front up-down motor	16	5	Under driver's seat		
Driver's power seat rear up-down motor	3	5	Under driver's seat		
Driver's power seat slide gear box	13	3	Under driver's seat		
Driver's power seat slide motor	6	2	Under driver's seat		
Driver's seat belt buckle switch	12	3	Driver's seat		
Driver's seat heater	9	3	Driver's seat		
Driver's seat lumbar switch	2	5	Under driver's seat		
Power seat control unit connector A	15	20	Under driver's seat		
Power seat control unit connector B	11	8	Under driver's seat		
Power seat control unit connector C	14	12	Under driver's seat		
Power seat control unit connector D	10	6	Under driver's seat		
C901	8	16	Under driver's seat	Floor wire harness (see page 22-46)	
C902	7	8	Under driver's seat	Driver's seat subharness	

Driver's Seat Subharness

Connector or Terminal	Ref	Cavities	Location	Connects to	Notes
Lumbar motor	18	2	Driver's seat		
Recline motor	1	5	Driver's seat		
Seat back heater connector A	5	2	Driver's seat		
Seat back heater connector B	17	2	Driver's seat		
C902	7	8	Under driver's seat	Driver's seat wire harness	

Protected by A R

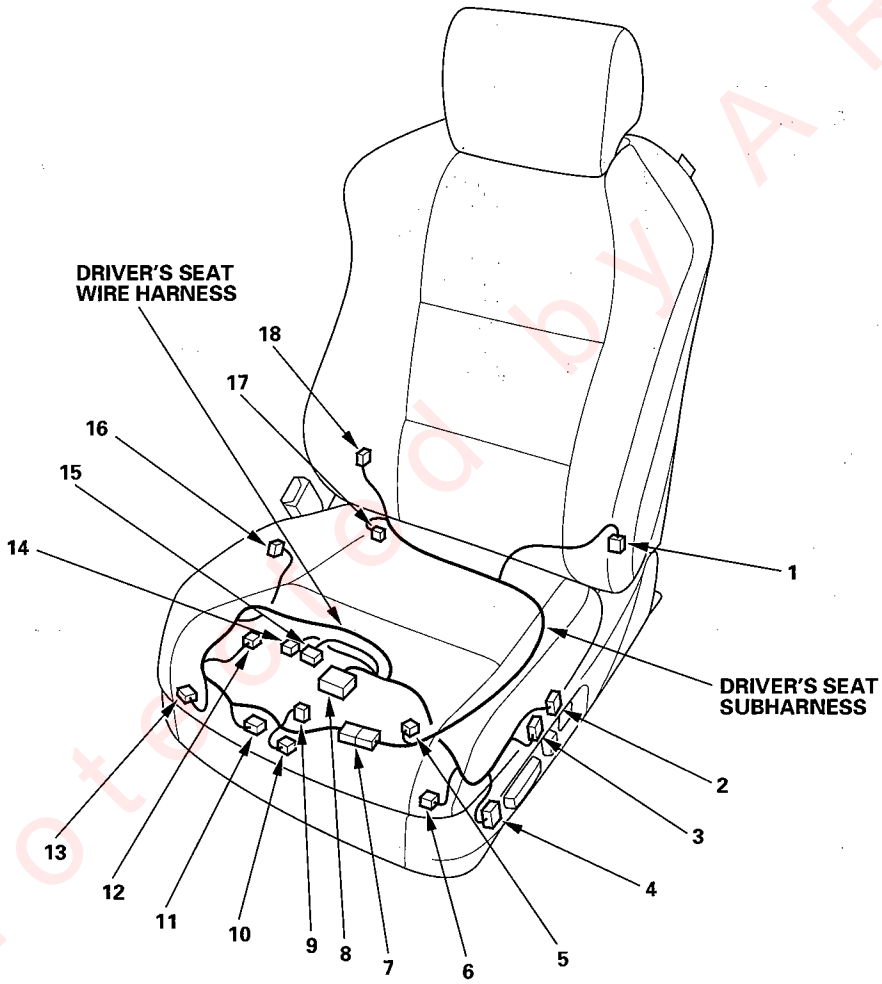

Protected by AR

Connector to Harness Index (cont'd)

Dashboard Wire Harness (SRS branch)

Connector or Terminal	Ref	Cavities	Location	Connects to	Notes
Driver's airbag	2	4	Under left side of dash		
Front passenger's airbag	6	4	Under right side of dash		
SRS unit connector A	3	28	Under middle of dash		
Under-dash fuse/relay box connector R (see page 22-66)	16	2	Under left side of dash		
Under-dash fuse/relay box connector S (see page 22-66)	17	2	Under left side of dash		
C403	1	4	Under left side of dash	Engine compartment wire harness (see page 22-32)	
C501	18	20	Under left side of dash	Floor wire harness	
G505	13			Body ground, via dashboard wire harness	

Floor Wire Harness (SRS branch)

Connector or Terminal	Ref	Cavities	Location	Connects to	Notes
Driver's seat belt tensioner	12	4	Left B-pillar		
Driver's side airbag	15	2	Under left side of dash		
Front passenger's seat belt tensioner	7	4	Right B-pillar		
Front passenger's side airbag	10	2	Under front passenger's seat		
Left side impact sensor (1st)	14	2	Under driver's seat		
Right side impact sensor (1st)	8	2	Under front passenger's seat		
SRS unit connector B	4	28	Under middle of dash		
C501	18	20	Under light side dash	Dashboard wire harness	
C801	11	4	Under front passenger's seat	OPDS unit harness	

OPDS Unit Harness

Connector or Terminal	Ref	Cavities	Location	Connects to	Notes
OPDS unit connector D	9	8	In front passenger's seat		
C801	11	4	Under front passenger's seat	Floor wire harness	

Side Curtain Airbag Harness

Connector or Terminal	Ref	Cavities	Location	Connects to	Notes
SRS unit connector C	5	16	Under middle of dash		

Protected by AR

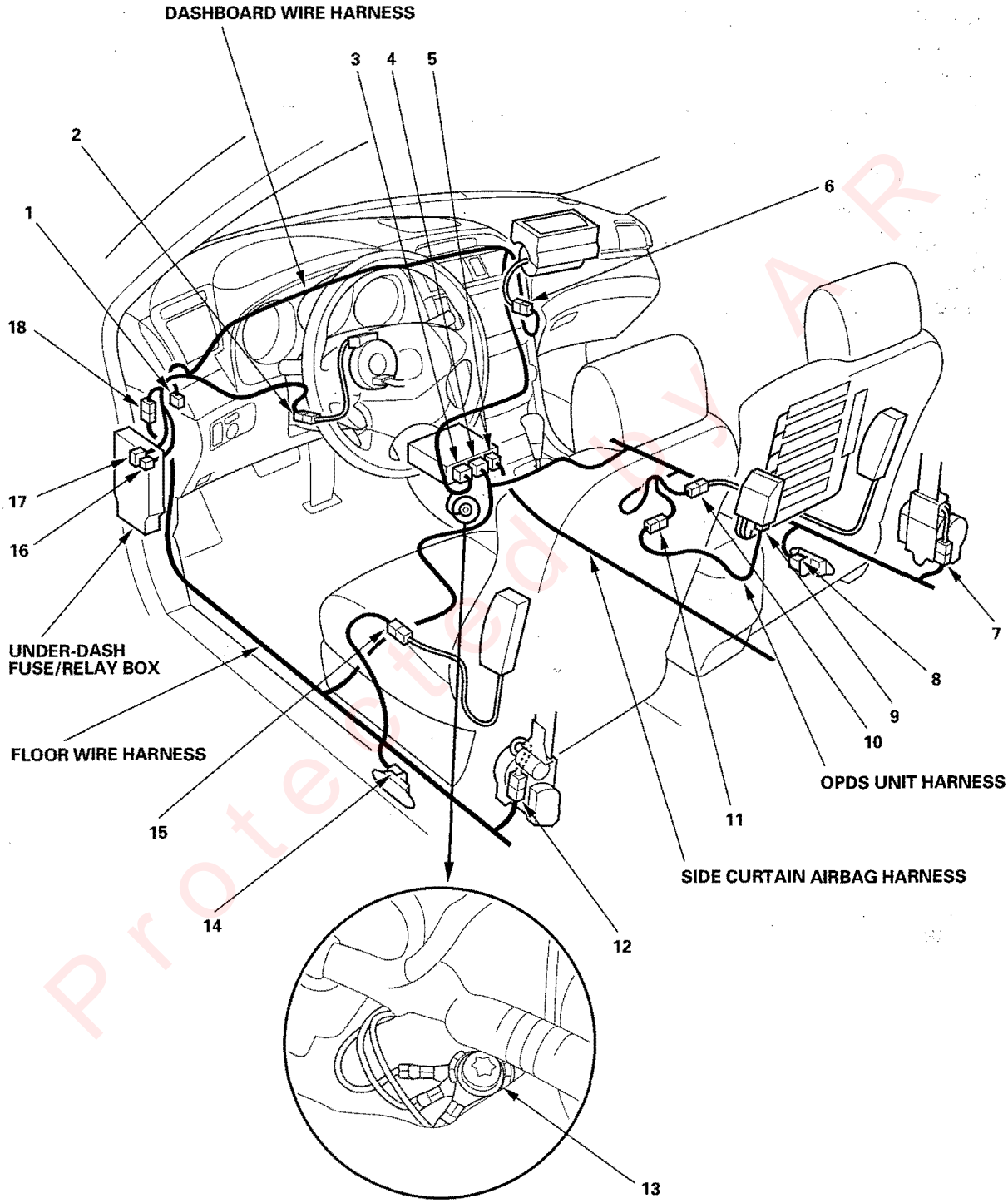

Protected by AR

Connector to Harness Index (cont'd)

Dashboard Wire Harness (SRS branch)

Connector or Terminal	Ref	Cavities	Location	Connects to	Notes
SRS unit connector A	1	28	Under middle of dash		

Floor Wire Harness (SRS branch)

Connector or Terminal	Ref	Cavities	Location	Connects to	Notes
SRS unit connector B	2	28	Under middle of dash		

Side Curtain Airbag Harness

Connector or Terminal	Ref	Cavities	Location	Connects to	Notes
Left side impact sensor (2nd)	6	2	Left quarter panel		
Left side curtain airbag	7	2	Left C-pillar		
Right side curtain airbag	4	2	Right quarter panel		
Right side impact sensor (2nd)	5	2	Right C-pillar		
SRS unit connector C	3	16	Under middle of dash		

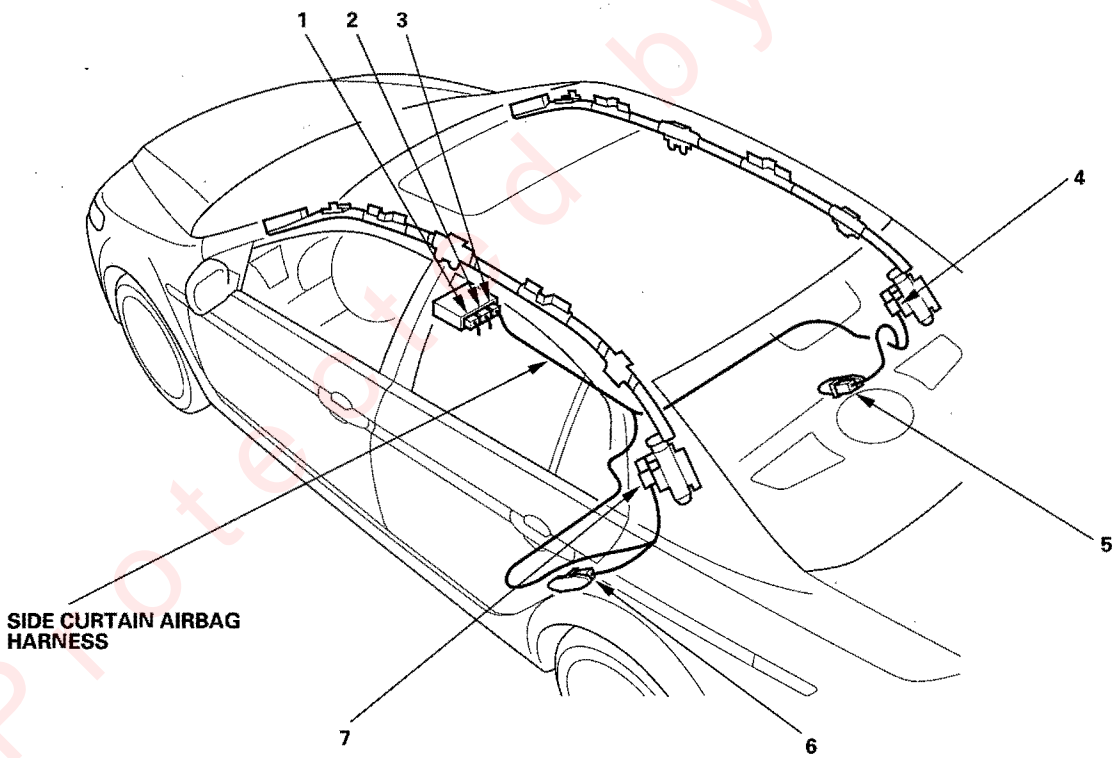

Protected by A R

A/C Wire Harness

Connector or Terminal	Ref	Cavities	Location	Connects to	Notes
Blower motor	7	2	Under middle of dash		
Climate control unit connector A	8	20	Under middle of dash		
Climate control unit connector B	9	16	Under middle of dash		
Driver's air mix control motor	1	5	Under middle of dash		
Driver's mode control motor	2	10	Under middle of dash		
Evaporator temperature sensor	3	2	Under middle of dash		
Front passenger's air mix control motor	4	5	Under middle of dash		
Front passenger's mode control motor	5	10	Under middle of dash		
Power transistor	10	4	Under middle of dash		
Recirculation control motor	6	5	Under middle of dash		
C851	11	14	Under middle of dash	Dashboard wire harness (see page 22-38)	

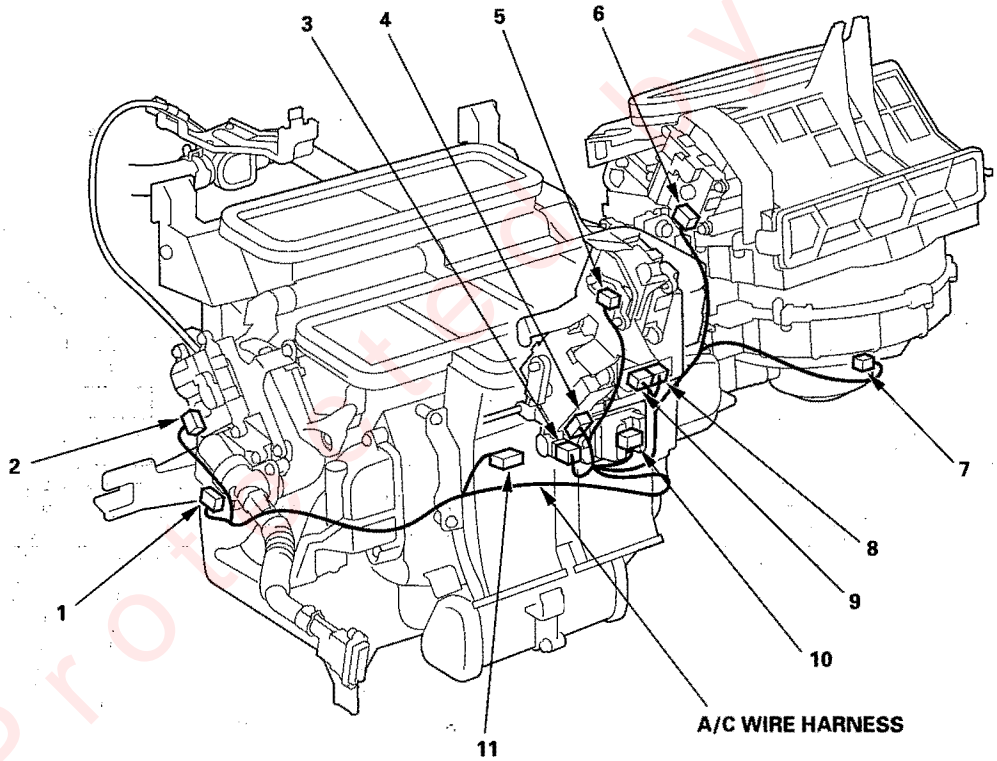

Proprietary A R

Connector to Fuse/Relay Box Index

Under-hood Fuse/Relay Box

Socket	Ref	Terminal	Connects to
A/C compressor clutch relay	2	4	
A (ELD unit)	5	3	Engine compartment wire harness (see page 22-32)
B	7		Not used
Blower motor relay	1	4	
C	8	2	Engine compartment wire harness (see page 22-32)
Condenser fan relay	15	4	
D	4	9	Engine compartment wire harness (see page 22-32)
E	9	16	Engine compartment wire harness (see page 22-32)
F	10	20	Front engine compartment wire harness (see page 22-29)
G	6	2	Engine compartment wire harness (see page 22-32)
H	11	14	Front engine compartment wire harness (see page 22-29)
J	12	5	Engine compartment wire harness (see page 22-32)
K	13	10	Engine compartment wire harness (see page 22-32)
Radiator fan relay	14	4	
Rear window defogger relay	3	4	
T101	17		Starter cable (see page 22-14)
T102	16		Engine wire harness (see page 22-16)

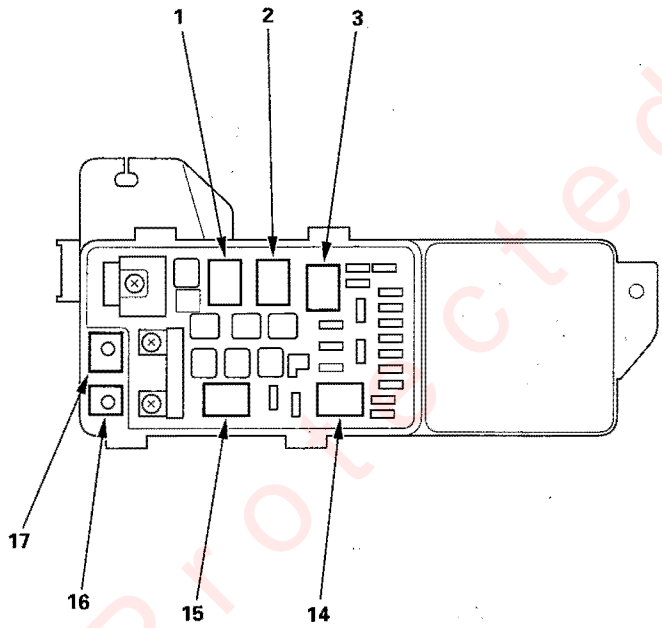

(Viewed from top)

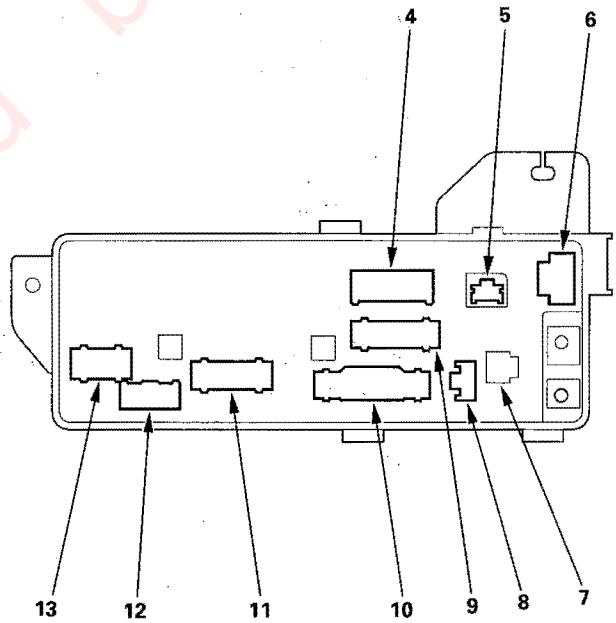

(Viewed from bottom)

Protected by AR

Under-hood Multi-relay Box

Socket	Ref	Terminal	Connects to
Fog lights/daytime running lights relay	1	4	Front engine compartment wire harness (see page 22-29)
Fan control relay	2	5	Front engine compartment wire harness (see page 22-29)

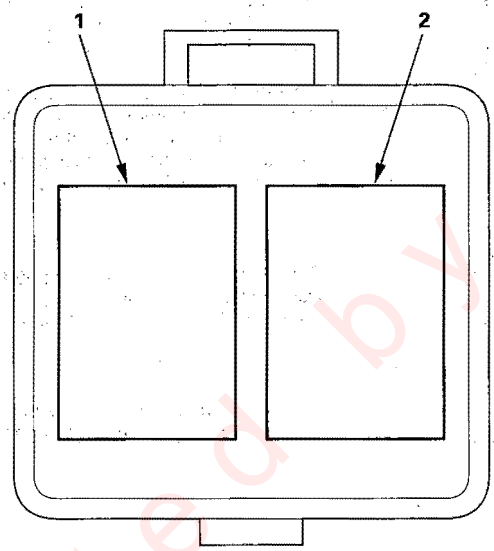

Protected by AR

Connector to Fuse/Relay Box Index (cont'd)

Under-dash Fuse/Relay Box

Socket	Ref	Terminal	Connects to
A	6	6	Dashboard wire harness (see page 22-38)
Accessory power socket relay	19	4	
A/F sensor relay	20	4	
B	12	6	Engine compartment wire harness (see page 22-32)
C	11	12	Engine compartment wire harness (see page 22-32)
D	13	17	Engine compartment wire harness (see page 22-32)
E	8	16	Floor wire harness (see page 22-46)
F	9	14	Floor wire harness (see page 22-46)
G	14	6	Floor wire harness (see page 22-46)
H	15	14	Floor wire harness (see page 22-46)
Ignition coil relay	23	4	
J	27	21	Driver's door subharness (see page 22-52)
K	26	12	Driver's door subharness (see page 22-52)
M	25	3	MICS service check connector
N	2	45	Dashboard wire harness (see page 22-38)
P (MICU)	17	30	Dashboard wire harness (see page 22-38)
PGM-FI main relay 1	21	4	
PGM-FI main relay 2	24	4	
Power window relay	22	4	
Q (MICU)	16	14	Dashboard wire harness (see page 22-38)
R (MES connector)	3	2	Dashboard wire harness (see page 22-38)
S	5	2	Dashboard wire harness (see page 22-38)
Starter cut relay	18	4	
T	7	6	Optional connector
Turn signal/hazard relay	4	6	
W	10	5	Roof wire harness (see page 22-50)
X	1	39	Dashboard wire harness (see page 22-38)

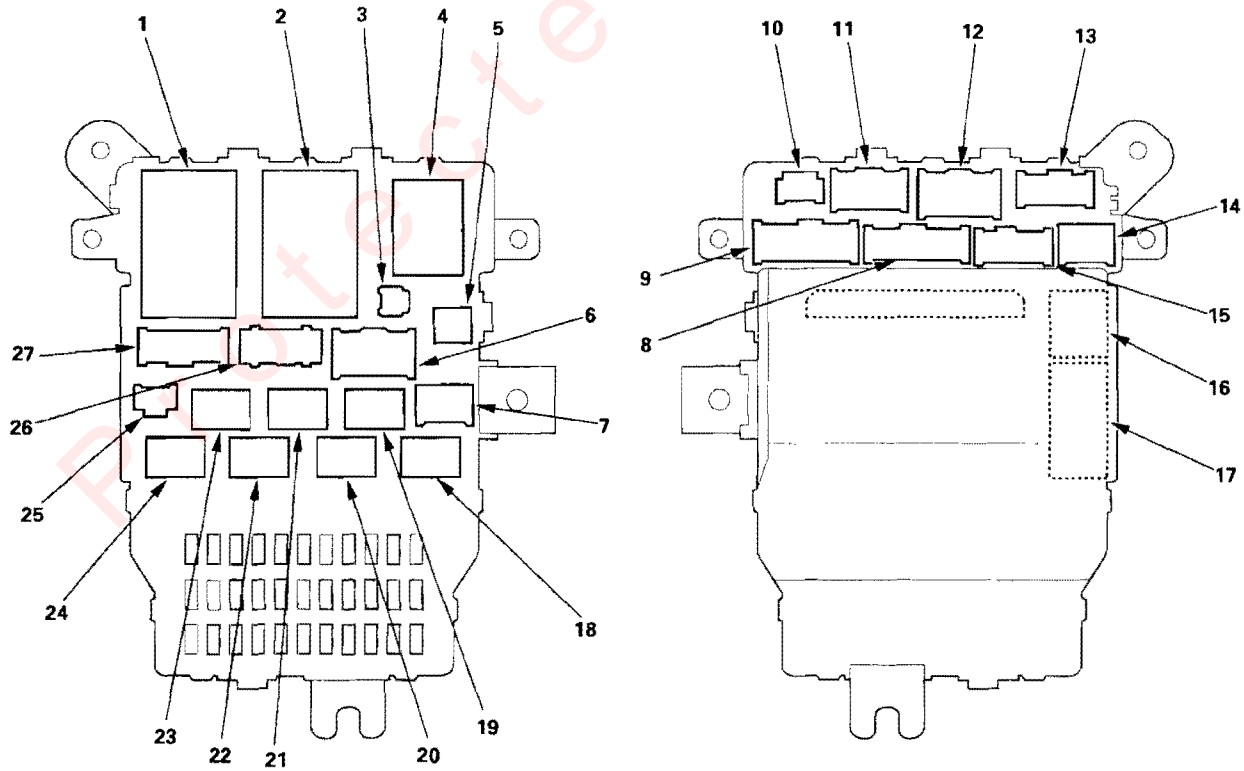

Protected by AR

Fuse to Components Index

Under-hood Fuse/Relay Box

Fuse Number	Amps	Wire Color	Component(s) or Circuit(s) Protected
1	15A	RED/YEL	Left headlight (igniter unit)
2	30A	Internal connection	Relay control module
3	7.5A	WHT/YEL	Left headlight (high/low switching solenoid)
4	10A	RED/BLK	Audio-HVAC display module light, A/T gear position console light, Center pocket light, Dash lights brightness control switch light, Driver's and front passenger's door lock switch light, Driving position memory switch light, Glove box light, Hazard warning switch light, Front parking lights, License plate lights, Moonroof switch light, Navigation unit, Power mirror switch light, Relay control module, Rear side marker lights, Roof console, Seat heater switches lights, Select/reset/information switch light, Side marker lights, Taillights, Trunk lid opener switch light, VSA OFF switch light
5	7.5A	WHT/GRN	Right headlight (high/low switching solenoid)
6	15A	RED/GRN	Right headlight (igniter unit)
7	7.5A	Internal connection	Relay control module
8	15A	WHT/GRN	CKP sensor A/B, CMP sensor, Data link connector (DLC), ECM/PCM (2 wires), Injectors, PGM-FI main relay 1, PGM-FI main relay 2, Throttle actuator control module relay
9	30A	BLU/YEL	Condenser fan motor (via condenser fan relay)
10	20A (USA)	BLU/RED	Fog lights relay, Fog lights
	15A (Canada)		Daytime running lights relay, Daytime running lights
11	30A	BLU/BLK	Radiator fan motor (via radiator fan relay)
12	7.5A	BLU/RED	A/C compressor clutch (via A/C compressor clutch relay)
13	20A	RED	Brake lights, ECM/PCM, High mount brake light, Multiplex integrated control unit (MICU)
		Internal connection	Horn relay, Horns
14	40A	BLK/YEL	Rear window defogger (via rear window defogger relay)
15	40A	YEL	No. 5 through No. 9 fuses in the under-dash fuse/relay box
		Internal connection	No. 7 fuse in the under-hood fuse/relay box
16	15A	WHT/BLK	Multiplex integrated control unit (MICU), Turn signal/hazard relay
17	30A	WHT/RED	VSA modulator-control unit (+B-MR)
18	40A	WHT	VSA modulator-control unit (+B-FSR)
19	40A	GRN/WHT	No. 1 through No. 4 fuses in the under-dash fuse/relay box
20	40A	BLU	No. 12 through No. 17 fuses in the under-dash fuse/relay box
21	40A	WHT/BLU	Blower motor (via blower motor relay)
22	120A	———	Battery, Power distribution
23	50A (IG)	WHT	Ignition switch (BAT)
	50A (P/W)	WHT/BLU	Power window relay, No. 24 through No. 28 fuses in the under-dash fuse/relay box

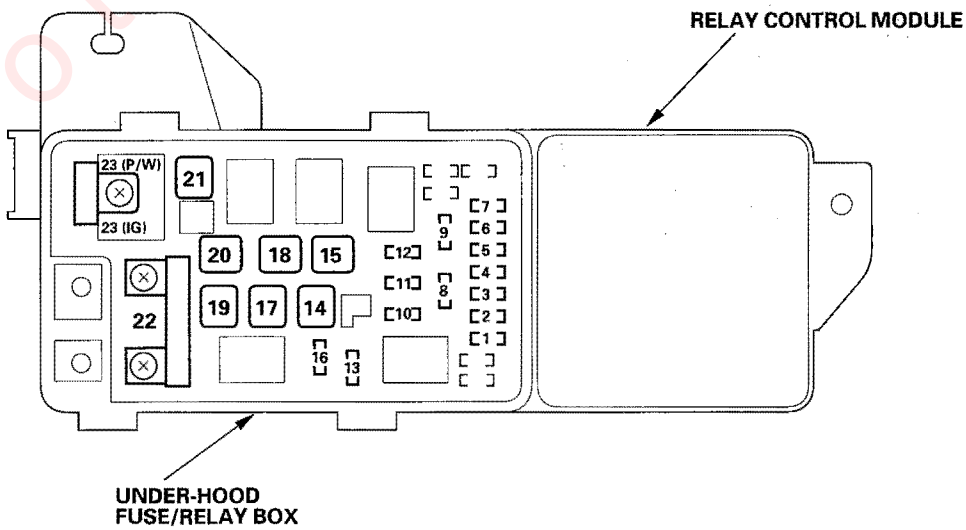

(cont'd)

Fuse to Components Index (cont'd)

Under-dash Fuse/Relay Box

Fuse Number	Amps	Wire Color	Component(s) or Circuit(s) Protected
1	15A	WHT/GRN	Throttle actuator control module (via throttle actuator control module relay)
2	15A	Fuse/relay box socket	Ignition coil (IG) relay
		BLK/WHT	Ignition coils (via ignition coil relay)
3	———	———	Not used
4	15A	WHT/BLK	A/F sensors (front and rear bank), Secondary HO2S (front and rear bank)
5	20A	WHT	Audio amplifier, Audio unit
6	7.5A	GRY/BLU	Courtesy lights, HandsFreeLink control unit, Ignition key light, Keyless receiver unit, Map lights, Roof console, Trunk light, Vanity mirror lights
7	7.5A	WHT/RED	Audio-HVAC display module, Clock (without navigation), Combination switch control unit, Gauge control module, Front passenger's power window switch/control unit, Immobilizer control unit-receiver, Navigation unit, Security indicator, Power window master switch, Power mirror control unit, XM receiver unit
		Fuse/relay box socket	Multiplex integrated control unit (MICU)
8	20A	WHT	Trunk lid opener solenoid
		Fuse/relay box socket	Multiplex integrated control unit (MICU)
9	15A	WHT/RED	Front accessory power socket, Rear accessory power socket
10	7.5A	WHT	OPDS unit, SRS unit
11	30A	GRN	Windshield wiper motor
12	———	———	Not used
13	20A	RED/WHT	Front passenger's power seat recline motor
14	20A	WHT/BLU	Driver's power seat control unit
15	20A	RED/BLK	Seat heaters and seat heater switches indicator light
16	20A	WHT/RED	Driver's power seat control unit, Driver's seat lumbar motor
17	20A	WHT/GRN	Front passenger's power seat slide motor
18	15A	BLK/YEL	Alternator, ECM/PCM (via brake pedal position switch), ELD unit, Engine mount control solenoid valve, EVAP canister purge valve, EVAP vent shut solenoid valve, Reverse lockout solenoid (M/T), VSA modulator-control unit
19	15A	BLK/GRN	ECM/PCM, Immobilizer control unit-receiver
		YEL/GRN	Fuel pump (via PGM-FI main relay 2)
20	7.5A	YEL/GRN	Automatic dimming inside mirror, Power mirror control unit, Windshield washer motor
21	7.5A	YEL	Back-up lights, Clock (without navigation), Combination switch control unit, Gauge control module, Keyless receiver unit, Multiplex integrated control unit (MICU), Relay control module, Shift lock relay (A/T), Seat belt tension reducers
22	10A	WHT/RED	SRS unit
23	7.5A	YEL/WHT	Radiator fan relay
		Fuse/relay box socket	A/F sensor relay
24	20A	YEL/RED	Left rear power window motor
25	20A	YEL/BLU	Right rear power window motor
26	30A	GRN/BLK	Front passenger's power window motor
27	30A	GRN/WHT	Driver's power window motor
28	20A	GRN	Moonroof control unit
29	———	———	Not used
30	7.5A	BLK/YEL	A/C compressor clutch relay, Blower motor relay, Climate control unit, Condenser fan relay, Power mirror actuators and defoggers, Radiator fan relay, Recirculation control motor, Rear window defogger relay
31	———	———	Not used
32	7.5A	YEL/RED	Audio unit, Audio-HVAC display module, Navigation unit, Shift lock solenoid (A/T), HandsFreeLink control unit
		Fuse/relay box socket	Accessory power socket relay, Multiplex integrated control unit (MICU)
33	———	———	Not used

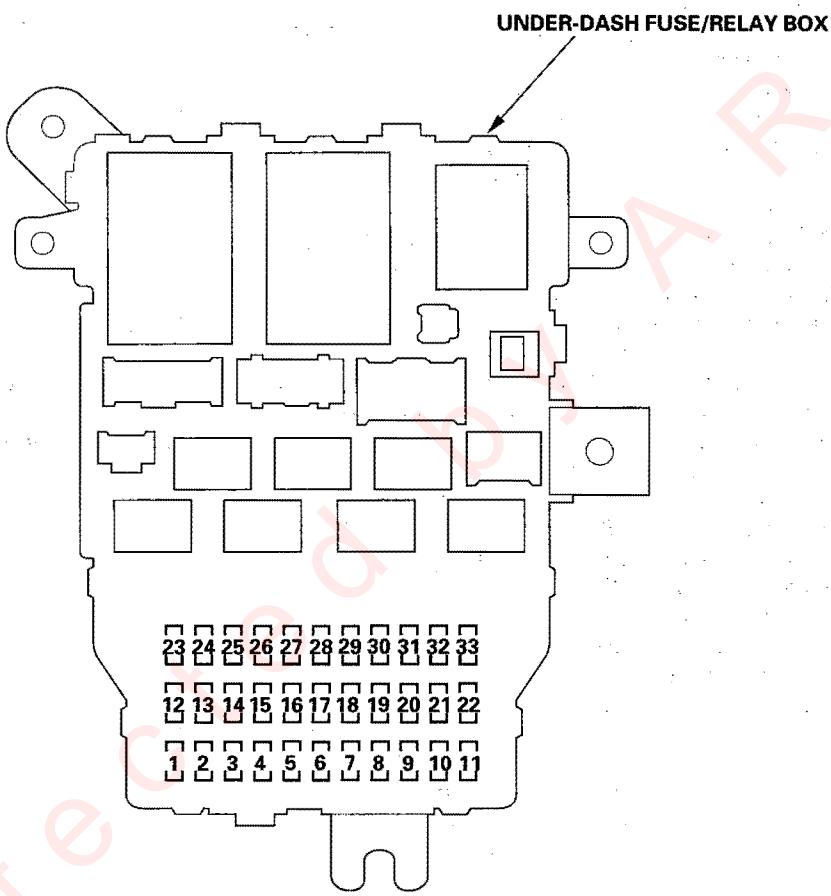

Protected by AR

Ground Distribution

Ground to Components Index

Ground	Component or circuit grounded
G1	Battery terminal
G2	Engine mount bracket
G3	Transmission housing
G101 and G102	ECM/PCM (PG1 and PG2 are BLK; LG1 and LG2 are BRN/YEL) BLK: EGR valve, Ignition coils, Immobilizer control unit-receiver, Transmission range switch (A/T), Throttle actuator control module BRN/YEL: CKP sensor A/B, CMP sensor
	Shielding between ECM/PCM and knock sensor, between ECM/PCM and Secondary HO2S (bank1, bank2), throttle actuator control module and throttle body have BRN/YEL wire
G151	A/T clutch pressure control solenoid valves A, B, C, Shift control solenoid valves A, B, C, TCC solenoid valve
G201	A/C pressure switch, Right headlights, Right fog light, Right front turn signal/parking light
G202	Power steering pressure (PSP) switch, Washer fluid level switch (Canada)
G203	VSA modulator-control unit (2 wires)
G301	Fan control relay, Hood switch, Left headlights, Left fog light, Left front turn signal/parking light, Radiator fan motor
G302	Blower motor relay, Brake fluid level switch, ELD unit, Keyless buzzer, Left front side marker light, Relay control module, Windshield wiper motor
G501	Audio-HVAC display module assembly, Cable reel, Dash lights brightness controller, Select/reset/information switch, Door multiplex control unit, Gauge control module (2 wires), Ignition key switch, Key interlock solenoid (A/T), Keyless receiver unit, Moonroof control unit, Noise condenser, Power mirror control unit, Power mirror switch, VSA OFF switch BLU/BLK: Power seat control unit
	Shielding between the turn signal indicators in the gauge control module and under-dash fuse/relay box has BLK wire
G502	Multiplex integrated control unit (MICU)
G503	Accessory power socket relay, Accessory power sockets (front/rear), Audio-HVAC display module assembly, Automatic dimming inside mirror, Climate control unit, Combination switch control unit, Console box light, Clutch interlock switch (M/T), Clutch pedal position switch (M/T), Data link connector (DLC), Seat heater switches (driver's/front passenger's), High mount brake light, HandsFreeLink control unit, Park pin switch (A/T), Relay control module, Roof console, Vanity mirror light switches, Sportshift mode switch (A/T)
	(G503 connects to G601 via under-dash fuse/relay box)
	Shielding between the ECM/PCM, gauge control module, navigation unit and VSA modulator-control unit have BRN wire
G504	Audio unit
G505	Memory erase signal (MES) connector, SRS unit (2 wires)
G506	Audio amplifier, Front passenger's door lock switch, Front passenger's door lock knob switch, Front passenger's power window switch, Glove box light, Power transistor, Right front side marker light, Right power mirror defogger, Seat heater relay, Shift lock relay
G601	Driver's door lock knob switch, Driver's door lock switch, Driver's door key cylinder switch, Driver's seat belt switch, Driver's seat heater, Left power mirror defogger, Left rear door lock knob switch, Left power window switch, Left side turn signal light, Multiplex integrated control unit (MICU) (2 wires), MICS service check connector, Power seat control unit (3 wires), Turn signal/hazard relay
	(G601 connects to G503 via under-dash fuse/relay box)
G602	Front passenger's power seat (2 wires), Front passenger's seat belt switch, Front passenger's seat heater, OPDS unit, Right rear door lock knob switch, Right rear power window switch
G603	Fuel pump
G604	Navigation unit, Right brake light/taillight, Right rear side marker light, Right rear turn signal light, XM receiver unit
	Shielding between the right rear turn signal light and gauge control module has BLK wire
G701	Back-up lights, Left brake light/taillight, Left rear side marker light, Left rear turn signal light, License plate lights, Trunk lid latch switch/trunk lid opener solenoid
	Shielding between the left rear turn signal light and gauge control module has BLK wire

Under-hood Fuse/Relay Box

Removal and Installation

Removal

1. Make sure you have the anti-theft codes for the radio and the navigation system, then write down the channels for the XM radio presets. Make sure the ignition switch is OFF.
2. Disconnect the battery negative cable, then disconnect the positive cable, and wait at least 3 minutes.
3. Remove the under-hood multi-relay box from the under-hood fuse/relay box.
4. Remove the screws (A) from the alternator and battery cable terminals.

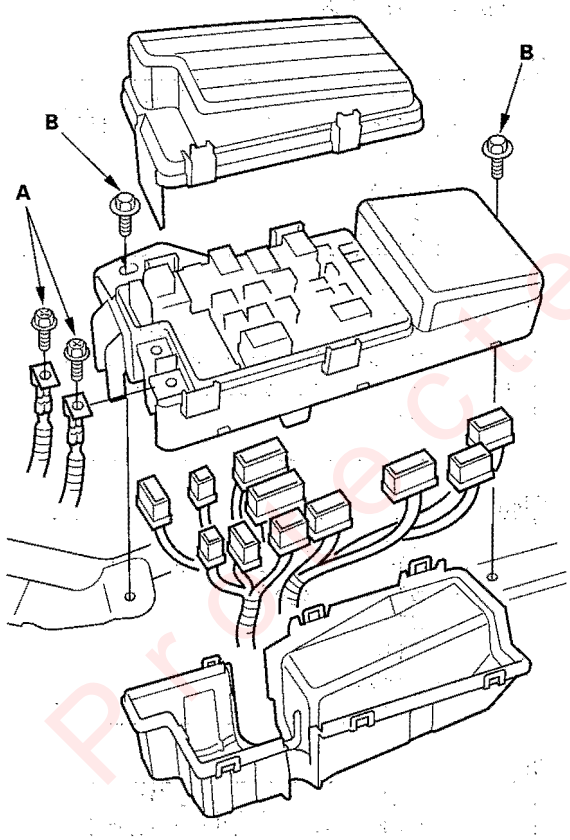

5. Remove the two mounting bolts (B) from the under-hood fuse/reley box.
6. Remove the under cover from the under-hood fuse/ reley box.
7. Disconnect the connectors from the under-hood fuse/reley box.

Installation

1. Connect the connectors to the under-hood fuse/ relay box, then install the under-hood fuse/relay box in the reverse order of removal.
2. Install the removed parts in the reverse order of removal.
3. Connect the both positive cable and negative cable to the battery.
4. Enter the anti-theft codes for the radio and navigation system, then enter the customer's XM radio channel presets.
5. Confirm that all systems work properly.

Protected by A R

DTC Troubleshooting

B1055: Relay Control Module lost communication with MICU

B1056: Relay Control Module lost communication with MICU (alarm)

B1057: Relay Control Module lost communication with MICU (door switch message)

B1058: Relay Control Module lost communication with Door Multiplex Control Unit (door lock switch message)

B1059: Relay Control Module lost communication with Door Multiplex Control Unit (panic message)

B1060: Relay Control Module lost communication with Gauge Control Module (VSP/NE message)

B1061: Relay Control Module lost communication with Gauge Control Module (A/T message)

B1062: Relay Control Module lost communication with Combination Switch Control Unit (headlight switch message)

B1063: Relay Control Module lost communication with Combination Switch Control Unit (wiper switch message)

NOTE: If you are troubleshooting multiple DTCs, be sure to follow the instructions in B-CAN system diagnosis test mode A (see page 22-108).

1. Clear the DTCs with the HDS.
2. Turn the ignition switch OFF and then back ON (II).
3. Check for DTCs with the HDS.

   Is DTC B1055, B1056, B1057, B1058, B1059, B1060, B1061, B1062 and/or B1063 indicated?

   YES—Go to step 4.

   NO—Intermittent failure, the communication line is OK at this time.■
4. Check for DTCs other than those listed at previous step.

   Are any other DTCs present?

   YES—Go to step 5.

   NO—Perform Relay Control Module Input Test (see page 22-137).
5. Find the chart that contains at least one retrieved DTC in column A and one retrieved DTC in column B. Perform the input test for the ECU listed in that chart.
   If no DTC from column B is found, then continue to Relay Control Module Input Test (see page 22-137).■

Chart 1

A	B	ECU
B1055 B1056 B1057	B1157 B1159 B1225 B1806 B1807	MICU (see page 22-130)

Chart 2

A	B	ECU
B1058 B1059	B1006 B1010 B1160 B1809	Door Multiplex Control Unit (see page 22-135)

Chart 3

A	B	ECU
B1060 B1061	B1008 B1011 B1705 B1706 B1805 B1808	Gauge Control Module (see page 22-134)

Chart 4

A	B	ECU
B1062 B1063	B1007 B1009 B1155 B1156	Combination Switch Control Unit (see page 22-136)

Protected by A R

Under-dash Fuse/Relay Box

Removal and Installation

SRS components are located in this area. Review the SRS component locations (see page 23-11) and precautions and procedures (see page 23-13) before performing repairs or servicing.

Removal

1. Make sure you have the anti-theft codes for the radio and the navigation system, then write down the channels for the XM radio presets. Make sure the ignition switch is OFF.
2. Disconnect the battery negative cable, then disconnect the positive cable, and wait at least 3 minutes.
3. Remove the left front door sill trim and left kick panel (see page 20-62).
4. Disconnect the connectors from the fuse side of the under-dash fuse/relay box (A).

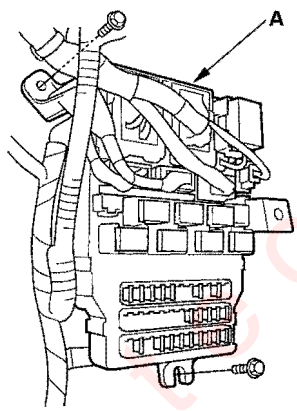

5. Remove the two mounting bolts and pull the fuse/relay box away from the body.
6. Disconnect the connectors and remove the under-dash fuse/relay box.

   NOTE: Some SRS harness connectors are spring-loaded lock type (see page 23-20).

Installation

1. Connect the connectors to the under-dash fuse/relay box, then install the under-dash fuse/relay box in the reverse order of removal.
2. Install the removed parts in the reverse order of removal.
3. Connect both the positive cable and negative cable to the battery.
4. Enter the anti-theft codes for the radio and navigation system, then enter the customer's XM radio channel presets.
5. Confirm that all systems work properly.

Protected by AR

Battery Test

⚠ WARNING

A battery can explode if you do not follow the proper procedure, causing serious injury to anyone nearby. Follow all procedures carefully and keep sparks and open flames away from the battery.

Use either a JCI or Bear ARBST tester, and follow the manufacturer's procedures. If you don't have one of these computerized testers, follow this conventional test procedure:

1. Be sure the temperature of the electrolyte is between 70°F (21°C) and 100°F (38°C).
2. Inspect the battery case for cracks or leaks.
   - If the case is damaged, replace the battery. ■
   - If the case looks OK, go to step 3.
3. Check the indicator EYE.
   - If the EYE indicates the battery is charged, go to step 4.
   - If the EYE indicates a low charge, go to step 7.
4. Apply a 300 amp load for 15 seconds to remove the surface charge.
5. Wait 15 seconds, then apply a test load of 280 amps for 15 seconds.
6. Record battery voltage.
   - If voltage is above 9.6 volts, the battery is OK. ■
   - If voltage is below 9.6 volts, go to step 7.
7. Charge the battery on High (40 amps) until the EYE shows the battery is charged, plus an additional 30 minutes. If the battery charge is very low, it may be necessary to bypass the charger's polarity protection circuitry.
   - If the EYE indicates the battery is charged within three hours, the battery is OK. ■
   - If the EYE indicates the battery is not charged within three hours, replace the battery. ■

Protected by A R

Power Relay Test

Use this chart to identify the type of relay, then do the test listed for it.

NOTE: For the turn signal/hazard relay input test (see page 22-198).

Relay	Test
A/C compressor clutch relay	Normally-open type
Accessory power socket relay	
Blower motor relay	
Condenser fan relay	
Ignition coil relay	
Air fuel ratio sensor relay	
PGM-FI main relay 1, 2	
Power window relay	
Radiator fan relay	
Rear window defogger relay	
Starter cut relay	
Seat heater relay	
Throttle actuator control relay	
Fog lights/Daytime running lights relay	
Shift lock relay	Five-terminal type
Fan control relay	

Normally-open type

Check for continuity between the terminals.

- There should be continuity between the No. 1 and No. 2 terminals when power and ground are connected to the No. 3 and No. 4 terminals.
- There should be no continuity between the No. 1 and No. 2 terminals when power is disconnected.

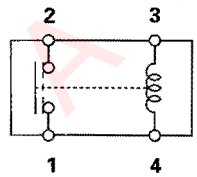

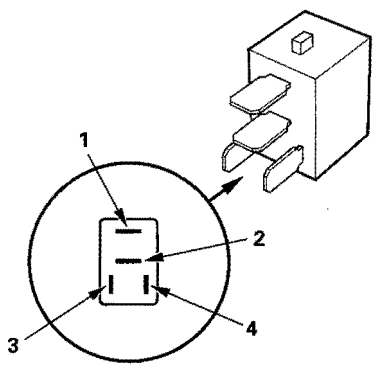

(cont'd)

Protected by AP

Power Relay Test (cont'd)

Five-terminal type B

Check for continuity between the terminals.

- There should be continuity between the No. 1 and No. 2 terminals when power and ground are connected to the No. 3 and No. 5 terminals.
- There should be continuity between the No. 1 and No. 4 terminals when power is disconnected.

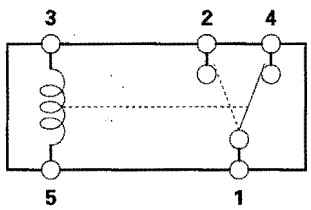

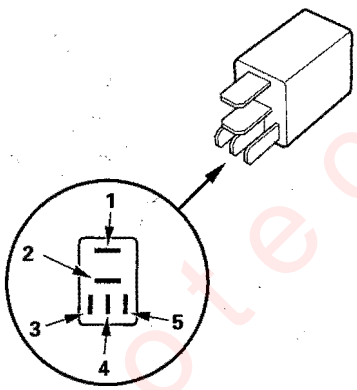

Protected by AR

Ignition Switch

Test

SRS components are located in this area. Review the SRS component locations (see page 23-11) and precautions and procedures (see page 23-13) before performing repairs or servicing.

1. Make sure you have the anti-theft code for the radio and the navigation system, then write down the channels for the XM radio presets. Make sure the ignition switch is OFF.
2. Disconnect the battery negative cable.
3. Remove the left front door sill trim and left kick panel (see page 20-62).
4. Disconnect the 6P connector from the driver's under-dash fuse/relay box.

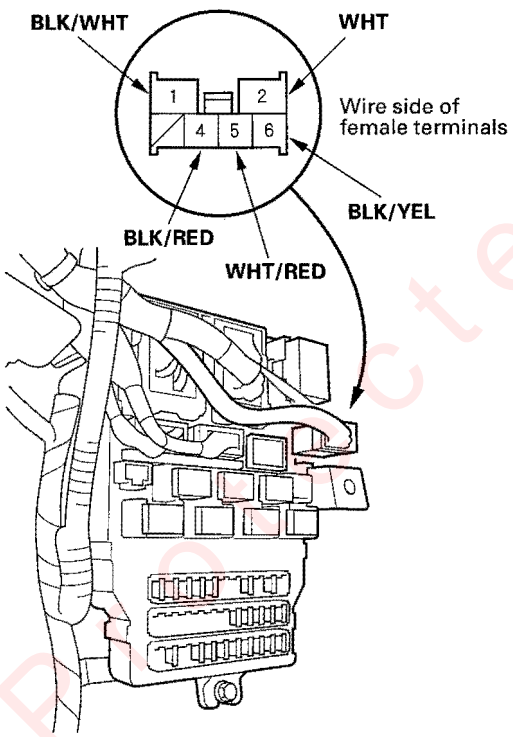

5. Check for continuity between the terminals in each switch position according to the table.

Terminal / Position	WHT/RED (ACC)	WHT (BAT)	BLK/YEL (IG1)	BLK/RED (IG2)	BLK/WHT (ST)
O (LOCK)					
I (ACC)	○——	——○			
II (ON)	○——	——○	——○	——○	
III (START)		○——	——○		——○

6. If the continuity checks do not agree with the table, replace the steering lock.
7. After reconnecting the battery, enter the anti-theft code for the radio and the navigation system, then enter the customer's XM radio channel presets.

Protected by AR

Component Location Index

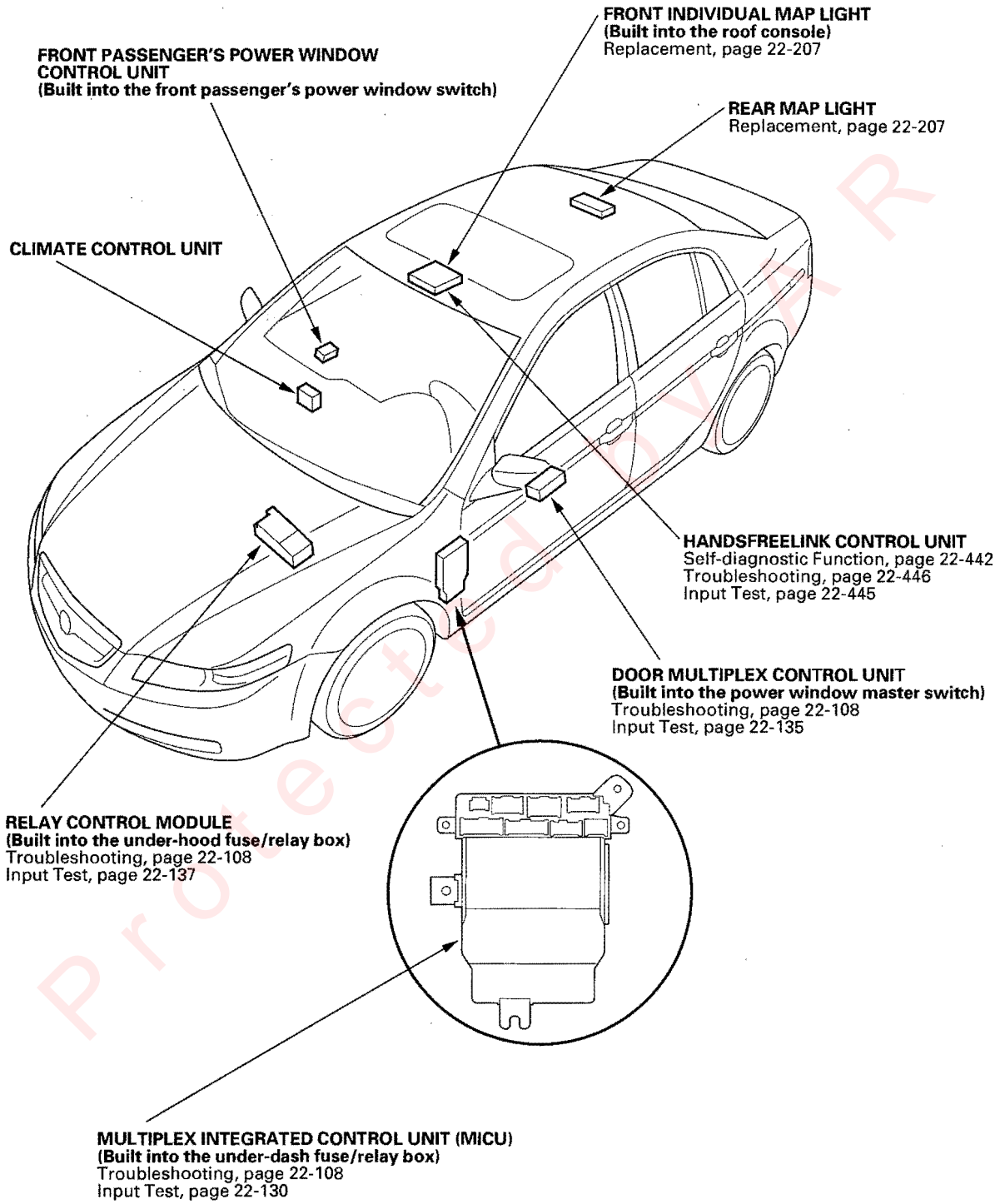

Protected by VAR

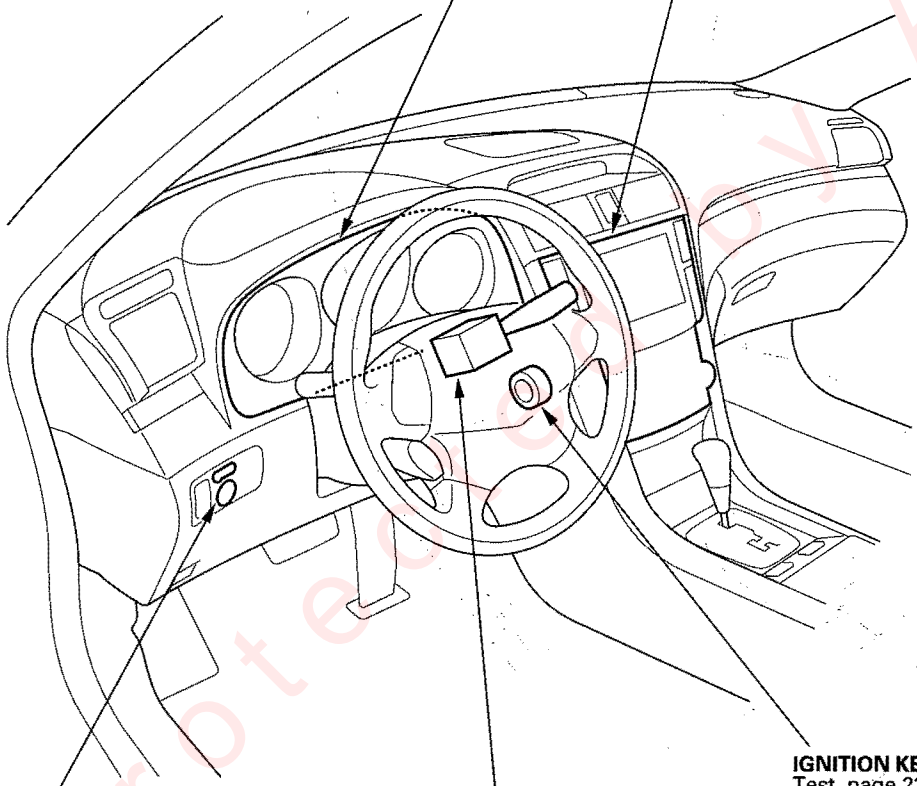

GAUGE CONTROL MODULE
Troubleshooting, page 22-268
Self-diagnostic Function, page 22-262
Input Test, page 22-134

DISPLAY PANEL CONTROL UNIT
Self-diagnostic Function, page 22-427
Troubleshooting, page 22-108
Input Test, page 22-435

IGNITION KEY LIGHT
Test, page 22-217

COMBINATION SWITCH CONTROL UNIT
(Built into the wiper/washer switch)
Input Test, page 22-136

POWER MIRROR CONTROL UNIT
Input Test, page 22-350

Protected by VAR

(cont'd)

Component Location Index (cont'd)

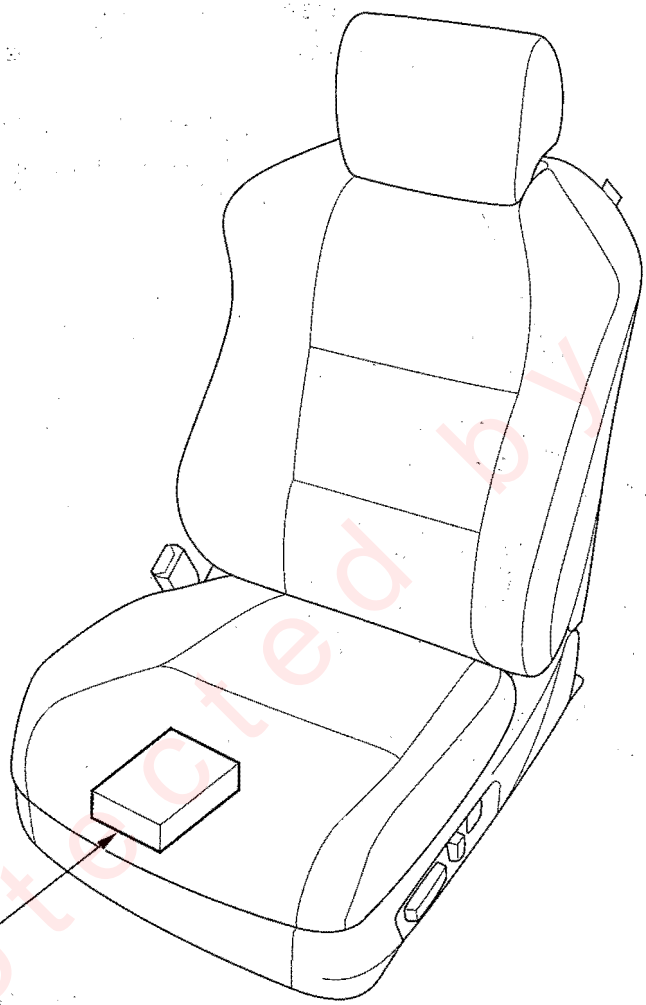

POWER SEAT CONTROL UNIT
Troubleshooting, page 22-352
Input Test, page 22-348

Protected by AR

General Troubleshooting Information

Troubleshooting CAN Circuit Related Problems

Using the HDS (Preferred method)

1. Go to B-CAN System Diagnosis Test Mode A to check for "Connected units" and DTCs (see page 22-108).
2. If no DTCs are retrieved, go to B-CAN System Diagnosis Test Mode C (see page 22-110) or D (see page 22-111).

Without HDS (Use only if the HDS is unavailable)

1. Check for communication circuit problems using B-CAN System Diagnosis Test Mode 1 (see page 22-112).
2. Check for DTCs while in Mode 1 (see page 22-112).

   NOTE: If the problem is related to the display panel control unit or HandsFreeLink system, check for DTCs first with their own self-diagnostic function.

   - HandsFreeLink control unit self-diagnostic function (see page 22-442).
   - Display panel control unit self-diagnostic function (see page 22-427).

3. Sort, and then troubleshoot the DTCs in the order below.

   – 1 Battery voltage DTCs
   – 2 Internal error DTCs
   – 3 Loss of communication DTCs
   (begining with the lowest number first; for example, if B1006 and B1059 are retrieved, troubleshoot B1006 first)
   – 4 Signal error DTCs

4. If no DTCs are retrieved, use B-CAN System Diagnosis Test Mode 2 to check all inputs related to failure (see step 11 on page 22-113).

Protected by AR

(cont'd)

General Troubleshooting Information (cont'd)

Loss of Communication DTC cross-reference chart

When an ECU is unable to communicate with the other ECUs on the circuit, the other units will set loss of communication DTCs. Use this chart to find the control unit that is not communicating.

1. Find the Transmitting Unit that is in the same row as all of the loss of communication DTCs retrieved.
2. Perform the input test for the transmitting unit.

Transmitting Unit	Message	Receiving Unit/Loss of Communication DTC						
		MICU	Relay Control Module	Door Multiplex Control Unit	Gauge Control Module	Combination Switch Control Unit	Display Panel Control Unit	Power Seat Control Unit
MICU	Alarm		B1056					
	MICU		B1055	RX	B1157	B1255		B1806
	Door Switch		B1057	RX	B1159			B1807
Relay Control Module	Relay Control Module	B1005			B1158			
Door Multiplex Control Unit	Panic	B1010	B1059					
	Door Lock Switch	B1006	B1058		B1160			
	Memory Switch							B1809
Gauge Control Module	VSP/NE	B1011	B1060				B1706	B1805
	A/T	B1008	B1061					B1808
	ENGTEMP						B1705	
	ILLUMI							
Combination Switch Control Unit	Headlight Switch	B1007	B1062		B1155			
	Wiper Switch	B1009	B1063		B1156			
ECM/PCM					B1168 B1169			
Climate Control Unit							B1726	

RX: Receiving unit does not set a loss of communication DTC.

Protected by A

DTC Troubleshooting Index

NOTE: Record all DTCs, and sort them by DTC type using the DTC troubleshooting index, then troubleshoot the DTC(s) in this order:

- Battery voltage DTCs
- Internal error DTCs
- Loss of communictaion DTCs (begining with the lowest number first; for example, if B1006 and B1059 are retrieved, troubleshoot B1006 first).
- Signal error DTCs

DTC	Description	ECU	DTC type	Page
B1000	Communication circuit error (BUS Off)	MICU	Loss of Communication	(see page 22-118)
B1001	MICU internal error (CPU error)	MICU	Internal Error	(see page 22-123)
B1002	MICU internal error (EEPROM error)	MICU	Internal Error	(see page 22-123)
B1005	MICU lost communication with Relay Control Module	MICU	Loss of Communication	(see page 22-125)
B1006	MICU lost communication with Door Multiplex Control Unit (door lock switch message)	MICU	Loss of Communication	(see page 22-125)
B1007	MICU lost communication with Combination Switch Control Unit (headlight switch message)	MICU	Loss of Communication	(see page 22-126)
B1008	MICU lost communication with Gauge Control Module (A/T message)	MICU	Loss of Communication	(see page 22-126)
B1010	MICU lost communication with Door Multiplex Control Unit (panic message)	MICU	Loss of Communication	(see page 22-127)
B1011	MICU lost communication with Gauge Control Module (VSP/NE message)	MICU	Loss of Communication	(see page 22-127)
B1026	Passenger's door lock switch malfunction	MICU	Signal Error	(see page 22-134)
B1050	Communication circuit error (BUS Off)	Relay Control Module	Loss of Communication	(see page 22-119)
B1055	Relay Control Module lost communication with MICU	Relay Control Module	Loss of Communication	(see page 22-72)
B1056	Relay Control Module lost communication with MICU (alarm message)	Relay Control Module	Loss of Communication	(see page 22-72)
B1057	Relay Control Module lost communication with MICU (door switch message)	Relay Control Module	Loss of Communication	(see page 22-72)
B1058	Relay Control Module lost communication with Door Multiplex Control Unit (door lock switch message)	Relay Control Module	Loss of Communication	(see page 22-72)
B1059	Relay Control Module lost communication with Door Multiplex Control Unit (panic message)	Relay Control Module	Loss of Communication	(see page 22-72)
B1060	Relay Control Module lost communication with Gauge Control Module (VSP/NE message)	Relay Control Module	Loss of Communication	(see page 22-72)
B1061	Relay Control Module lost communication with Gauge Control Module (A/T message)	Relay Control Module	Loss of Communication	(see page 22-72)
B1062	Relay Control Module lost communication with Combination Switch Control Unit (headlight switch message)	Relay Control Module	Loss of Communication	(see page 22-72)
B1063	Relay Control Module lost communication with Combination Switch Control Unit (wiper switch message)	Relay Control Module	Loss of Communication	(see page 22-72)

(cont'd)

DTC Troubleshooting Index (cont'd)

DTC	Description	ECU	DTC type	Page
B1075	Headlight switch malfunction	Relay Control Module	Signal Error	(see page 22-178)
B1076	Windshield wiper signal error	Relay Control Module	Signal Error	(see page 22-244)
B1077	Wiper switch (As) malfunction	Relay Control Module	Signal Error	(see page 22-246)
B1080	Power supply circuit (IG1 line) input error for Relay Control Module and MICU	Relay Control Module	Battery voltage	(see page 22-128)
B1100	Communication circuit error (BUS Off)	Door Multiplex Control Unit	Loss of Communication	(see page 22-119)
B1102	Door Multiplex Control Unit internal error	Door Multiplex Control Unit	Internal Error	(see page 22-124)
B1125	Driver's power window motor A pulse malfunction	Door Multiplex Control Unit	Signal Error	(see page 22-226)
B1126	Driver's power window motor B pulse malfunction	Door Multiplex Control Unit	Signal Error	(see page 22-226)
B1127	Driver's door lock key cylinder switch malfunction	Door Multiplex Control Unit	Signal Error	(see page 22-146)
B1128	Driver's door lock switch malfunction	Door Multiplex Control Unit	Signal Error	(see page 22-147)
B1129	Driver's door lock knob switch malfunction	Door Multiplex Control Unit	Signal Error	(see page 22-148)
B1130	Front passenger's power window motor A pulse malfunction	Door Multiplex Control Unit	Signal Error	(see page 22-227)
B1131	Front passenger's power window motor B pulse malfunction	Door Multiplex Control Unit	Signal Error	(see page 22-227)
B1140	Driver's power window position detect circuit malfunction	Door Multiplex Control Unit	Signal Error	(see page 22-228)
B1141	Door Multiplex Control Unit lost communication with Door Multiplex Control Unit (UART BUS line failure)	Door Multiplex Control Unit	Loss of Communication	(see page 22-228)
B1142	Door Multiplex Control Unit lost communication with front passenger's power window switch (UART line open)	Door Multiplex Control Unit	Loss of Communication	(see page 22-229)
B1143	Door MPCS internal error	Door Multiplex Control Unit	Signal Error	(see page 22-230)
B1144	Abnormal signal from keyless receiver unit	Door Multiplex Control Unit	Signal Error	(see page 22-149)
B1145	Front passenger's power window position detect circuit malfunction	Door Multiplex Control Unit	Signal Error	(see page 22-230)
B1146	Front passenger's power window switch malfunction	Door Multiplex Control Unit	Signal Error	(see page 22-231)

Protected by AP

DTC	Description	ECU	DTC type	Page
B1150	Communication circuit error (BUS Off)	Gauge Control Module	Loss of Communication	(see page 22-120)
B1152	Gauge Control Module internal error	Gauge Control Module	Internal Error	(see page 22-268)
B1155	Gauge Control Module lost communication with Combination Switch Control Unit (headlight switch message)	Gauge Control Module	Loss of Communication	(see page 22-269)
B1156	Gauge Control Module lost communication with Combination Switch Control Unit (wiper switch message)	Gauge Control Module	Loss of Communication	(see page 22-269)
B1157	Gauge Control Module lost communication with MICU	Gauge Control Module	Loss of Communication	(see page 22-270)
B1158	Gauge Control Module lost communication with Relay Control Module	Gauge Control Module	Loss of Communication	(see page 22-270)
B1159	Gauge Control Module lost communication with MICU (door switch message)	Gauge Control Module	Loss of Communication	(see page 22-271)
B1160	Gauge Control Module lost communication with Door Multiplex Control Unit (door lock switch message)	Gauge Control Module	Loss of Communication	(see page 22-271)
B1168	Gauge Control Module lost communication with ECM/PCM (engine messages)	Gauge Control Module	Loss of Communication	(see page 22-272)
B1169	Gauge Control Module lost communication with PCM (A/T messages)	Gauge Control Module	Loss of Communication	(see page 22-273)
B1175	Fuel gauge sending unit signal malfunction	Gauge Control Module	Signal Error	(see page 22-274)
B1177	Abnormal battery voltage (7.5 V)	Gauge Control Module	Battery voltage	(see page 22-275)
B1178	F-CAN communication circuit error	Gauge Control Module	Loss of Communication	(see page 22-276)
B1202	Climate Control Unit internal error	Climate Control Unit	Internal Error	(see page 21-49)
B1225	Open in the in-car temperature sensor circuit	Climate Control Unit	Signal Error	(see page 21-24)
B1226	Short in the in-car temperature sensor circuit	Climate Control Unit	Signal Error	(see page 21-25)
B1227	Open in the outside air temperature sensor circuit	Climate Control Unit	Signal Error	(see page 21-26)
B1228	Short in the outside air temperature sensor circuit	Climate Control Unit	Signal Error	(see page 21-27)
B1229	Open in the sunlight sensor circuit	Climate Control Unit	Signal Error	(see page 21-28)
B1230	Short in the sunlight sensor circuit	Climate Control Unit	Signal Error	(see page 21-30)
B1231	Open in the evaporator temperature sensor circuit	Climate Control Unit	Signal Error	(see page 21-31)
B1232	Short in the evaporator temperature sensor circuit	Climate Control Unit	Signal Error	(see page 21-32)
B1233	Open in the driver's air mix control motor circuit	Climate Control Unit	Signal Error	(see page 21-33)
B1234	Short in the driver's air mix control motor circuit	Climate Control Unit	Signal Error	(see page 21-34)
B1235	Problem in the driver's air mix control linkage, door, or motor	Climate Control Unit	Signal Error	(see page 21-36)

(cont'd)

Protected by SAR

DTC Troubleshooting Index (cont'd)

DTC	Description	ECU	DTC type	Page
B1236	Open in the passenger's air mix control motor circuit	Climate Control Unit	Signal Error	(see page 21-36)
B1237	Short in the passenger's air mix control motor circuit	Climate Control Unit	Signal Error	(see page 21-37)
B1238	Problem in the passenger's air mix control linkage, door, or motor	Climate Control Unit	Signal Error	(see page 21-39)
B1239	Open or short in the mode control motor circuit	Climate Control Unit	Signal Error	(see page 21-39)
B1240	Problem in the driver's mode control linkage, doors, or motor	Climate Control Unit	Signal Error	(see page 21-41)
B1241	Problem in the driver's blower motor circuit	Climate Control Unit	Signal Error	(see page 21-44)
B1242	Problem in the passenger's mode control linkage, doors, or motor	Climate Control Unit	Signal Error	(see page 21-42)
B1243	Problem in the passenger's blower motor circuit	Climate Control Unit	Signal Error	(see page 21-44)
B1250	Communication circuit error (BUS Off)	Combination Switch Control Unit	Loss of Communication	(see page 22-120)
B1255	Combination Switch Control Unit lost communication with MICU	Combination Switch Control Unit	Loss of Communication	(see page 22-129)
B1275	Headlight switch OFF position circuit malfunction	Combination Switch Control Unit	Signal Error	(see page 22-179)
B1276	Headlight switch SMALL position circuit malfunction	Combination Switch Control Unit	Signal Error	(see page 22-180)
B1278	Headlight switch ON position circuit malfunction	Combination Switch Control Unit	Signal Error	(see page 22-180)
B1279	Dimmer switch circuit malfunction	Combination Switch Control Unit	Signal Error	(see page 22-181)
B1280	Turn signal switch circuit malfunction	Combination Switch Control Unit	Signal Error	(see page 22-181)
B1281	Windshield wiper switch MIST position circuit malfunction	Combination Switch Control Unit	Signal Error	(see page 22-248)
B1282	Windshield wiper switch INT (AUTO) position circuit malfunction	Combination Switch Control Unit	Signal Error	(see page 22-248)
B1283	Windshield wiper switch LOW position circuit malfunction	Combination Switch Control Unit	Signal Error	(see page 22-248)
B1284	Windshield wiper switch HIGH position circuit malfunction	Combination Switch Control Unit	Signal Error	(see page 22-248)

Protected by AP

DTC	Description	ECU	DTC type	Page
B1700	Communication circuit error (BUS Off)	Display panel control unit	Loss of Communication	(see page 22-121)
B1701	Display panel control unit internal error (CPU error)	Display panel control unit	Internal Error	(see page 22-432)
B1702	Display panel control unit internal error (EEPROM error)	Display panel control unit	Internal Error	(see page 22-432)
B1705	Display panel control unit lost communication with Gauge Control Module (engine coolant temperature message)	Display panel control unit	Loss of Communication	(see page 22-433)
B1706	Display panel control unit lost communication with Gauge Control Module (VSP/NE message)	Display panel control unit	Loss of Communication	(see page 22-433)
B1725	Navigation Display Screen temperature too high	Display panel control unit	Loss of Communication	(see page 22-434)
B1726	Display Panel Control Unit lost communication with Climate Control Unit	Display panel control unit	Loss of Communication	(see page 21-48)
B1750	Communication circuit Error (BUS Off)	HandsFreeLink Control Unit	Loss of Communication	(see page 22-121)
B1751	HandsFreeLink Control Unit CPU Error (Anomalous CPU)	HandsFreeLink Control Unit	Internal Error	(see page 22-446)
B1775	Microphone Input/Output Shorted to Power	HandsFreeLink Control Unit	Signal Error	(see page 22-447)
B1776	Microphone Input/Output Shorted to Ground/Open	HandsFreeLink Control Unit	Signal Error	(see page 22-448)
B1779	HFL-Voice Control Switch (Pick Up/Hang Up Switch) Open	HandsFreeLink Control Unit	Signal Error	(see page 22-449)
B1780	HFL-Voice Control Switch (Pick Up/Hang Up Switch) Short	HandsFreeLink Control Unit	Signal Error	(see page 22-450)
B1792	HandsFreeLink Control Unit Internal Error	HandsFreeLink Control Unit	Signal Error	(see page 22-451)
B1800	Communication circuit error (BUS Off)	Power Seat Control Unit	Loss of Communication	(see page 22-122)
B1802	Power Seat Control Unit internal error (EEPROM error)	Power Seat Control Unit	Internal Error	(see page 22-352)
B1805	Power Seat Control Unit lost communication with Gauge Control Module (VSP/NE message)	Power Seat Control Unit	Loss of Communication	(see page 22-352)
B1806	Power Seat Control Unit lost communication with MICU	Power Seat Control Unit	Loss of Communication	(see page 22-353)
B1807	Power Seat Control Unit lost communication with Door Multiplex Control Unit (door switch message)	Power Seat Control Unit	Loss of Communication	(see page 22-353)
B1808	Power Seat Control Unit lost communication with Gauge Control Module (A/T message)	Power Seat Control Unit	Loss of Communication	(see page 22-354)
B1809	Power Seat Control Unit lost communication with Door Multiplex Control Unit (memory switch message)	Power Seat Control Unit	Loss of Communication	(see page 22-354)

(cont'd)

DTC Troubleshooting Index (cont'd)

DTC	Description	ECU	DTC type	Page
B1825	Slide motor pulse error	Power Seat Control Unit	Signal Error	(see page 22-355)
B1826	Front up-down motor pulse error	Power Seat Control Unit	Signal Error	(see page 22-359)
B1827	Rear up-down motor pulse error	Power Seat Control Unit	Signal Error	(see page 22-362)
B1828	Recline motor pulse error	Power Seat Control Unit	Signal Error	(see page 22-365)
B1829	A/T P signal and VSS signal mismatch	Power Seat Control Unit	Signal Error	(see page 22-368)
B1830	Right mirror horizontal sensor malfunction	Power Seat Control Unit	Signal Error	(see page 22-369)
B1831	Right mirror vertical sensor malfunction	Power Seat Control Unit	Signal Error	(see page 22-372)
B1832	Left mirror horizontal sensor malfunction	Power Seat Control Unit	Signal Error	(see page 22-375)
B1833	Left mirror vertical sensor malfunction	Power Seat Control Unit	Signal Error	(see page 22-378)
B1834	M/T harness poor ground	Power Seat Control Unit	Signal Error	(see page 22-381)
B1837	Power seat position memory recall error	Power Seat Control Unit	Signal Error	(see page 22-381)
B1843	Power Seat Control Unit lost communication with other units (UART communication error 2)	Power Seat Control Unit	Loss of Communication	(see page 22-382)

Protected by AP

System Description

Body Controller Area Network (B-CAN) and Fast Controller Area Network (F-CAN)

The fast controller area network (F-CAN) and the body controller area network (B-CAN) share information between multiple electronic control units (ECUs). B-CAN communication moves at a slower speed for convenience related items and for other functions. F-CAN information moves at a faster speed for "real time" functions such as fuel and emissions data. To allow both systems to share information, the gauge control module translates information from the B-CAN to the F-CAN and from the F-CAN to the B-CAN.

The ECUs on the B-CAN and the F-CAN transmit and receive information in the form of structured messages that may be received by several different ECUs on the network at one time. These messages are transmitted and received across a communication circuit that consists of a single wire that is shared by all the ECUs on the circuit. Since messages on the F-CAN are typically of higher importance, a second wire is used for communication circuit integrity monitoring. A backup circuit is also added to the headlight and wiper circuits on the B-CAN in the event of a network wire or ECU failure that would effect the operation of the system.

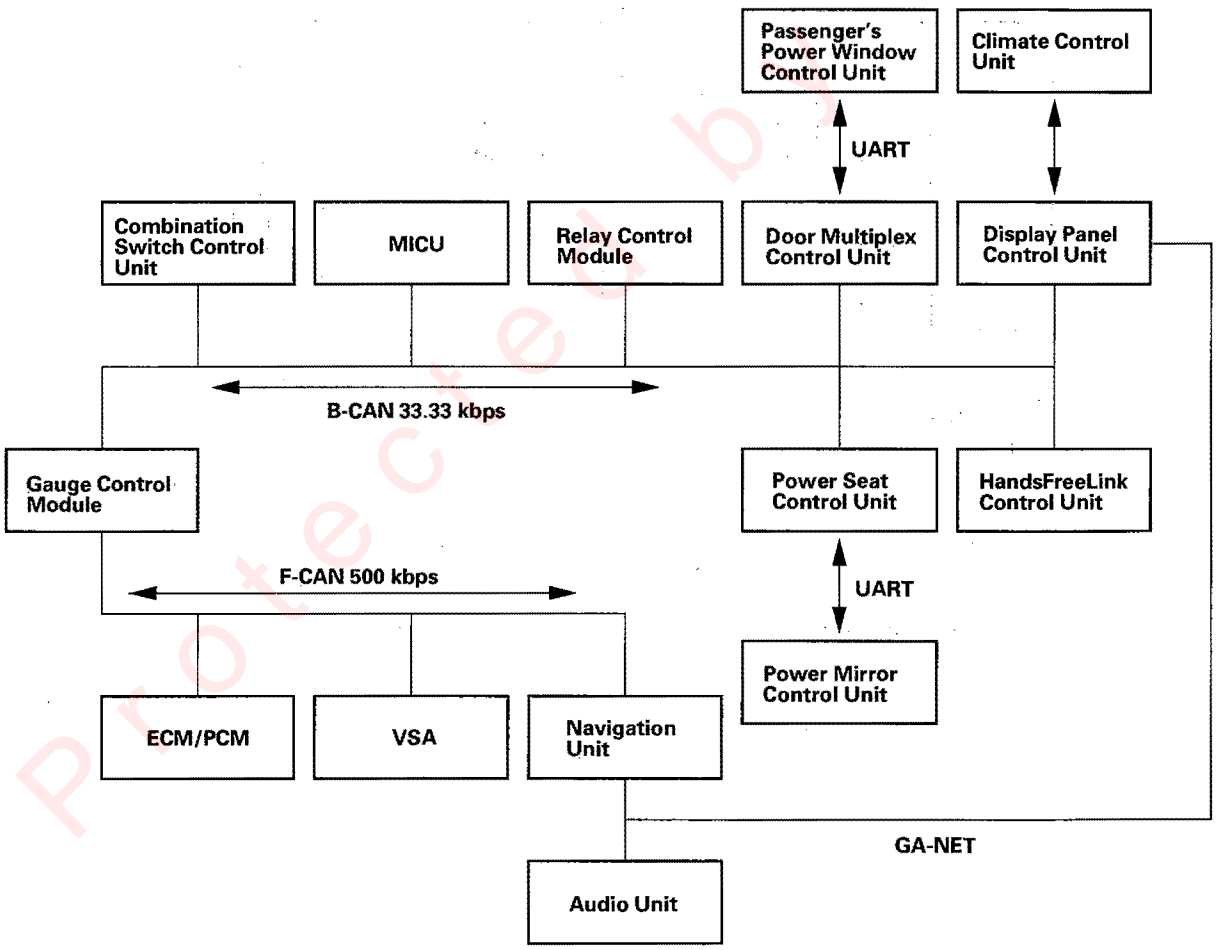

Protected by AP

(cont'd)

System Description (cont'd)

Messages are transmitted by an ECU (that monitors an input) over the communication circuit. ECUs that use the message (information related to that input) are the receivers. For example, the combination switch control unit monitors the wiper switch. When the wiper switch is placed in the low speed position, the combination switch control unit transmits that message on the communication circuit. The relay control module receives the message and turns on the wipers by providing a ground for the relay.

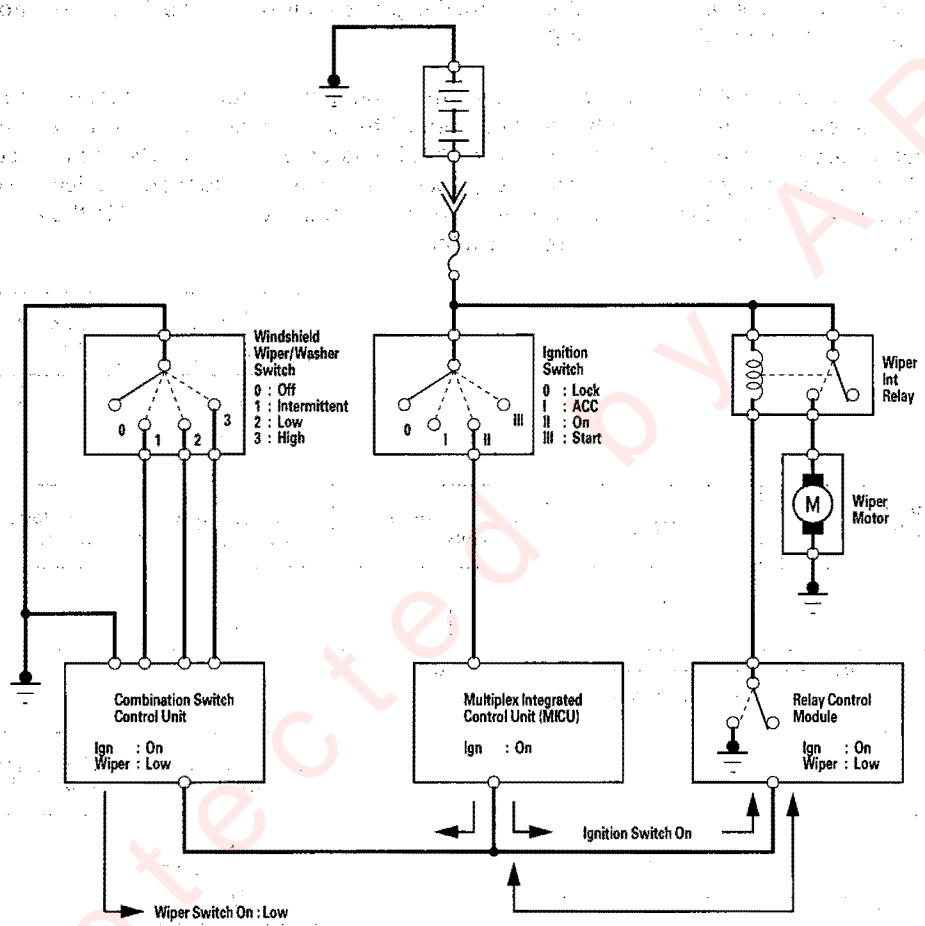

Protected by AR

Connected ECUs

Several ECUs are connected to each of the two networks. The gauge control module is part of both networks since it is the "gateway" between them. Here is a list of ECUs and the network they are connected to.

B-CAN ECUs

- Gauge control module
- Relay control module
- Multiplex intergrated control unit (MICU)
- Door multiplex control unit
- Combination switch control unit
- Display panel control unit
- HandsFreeLink control unit
- Power seat control unit

F-CAN ECUs

- Gauge control module
- ECM/PCM
- Navigation unit
- VSA (vehicle stability assist)

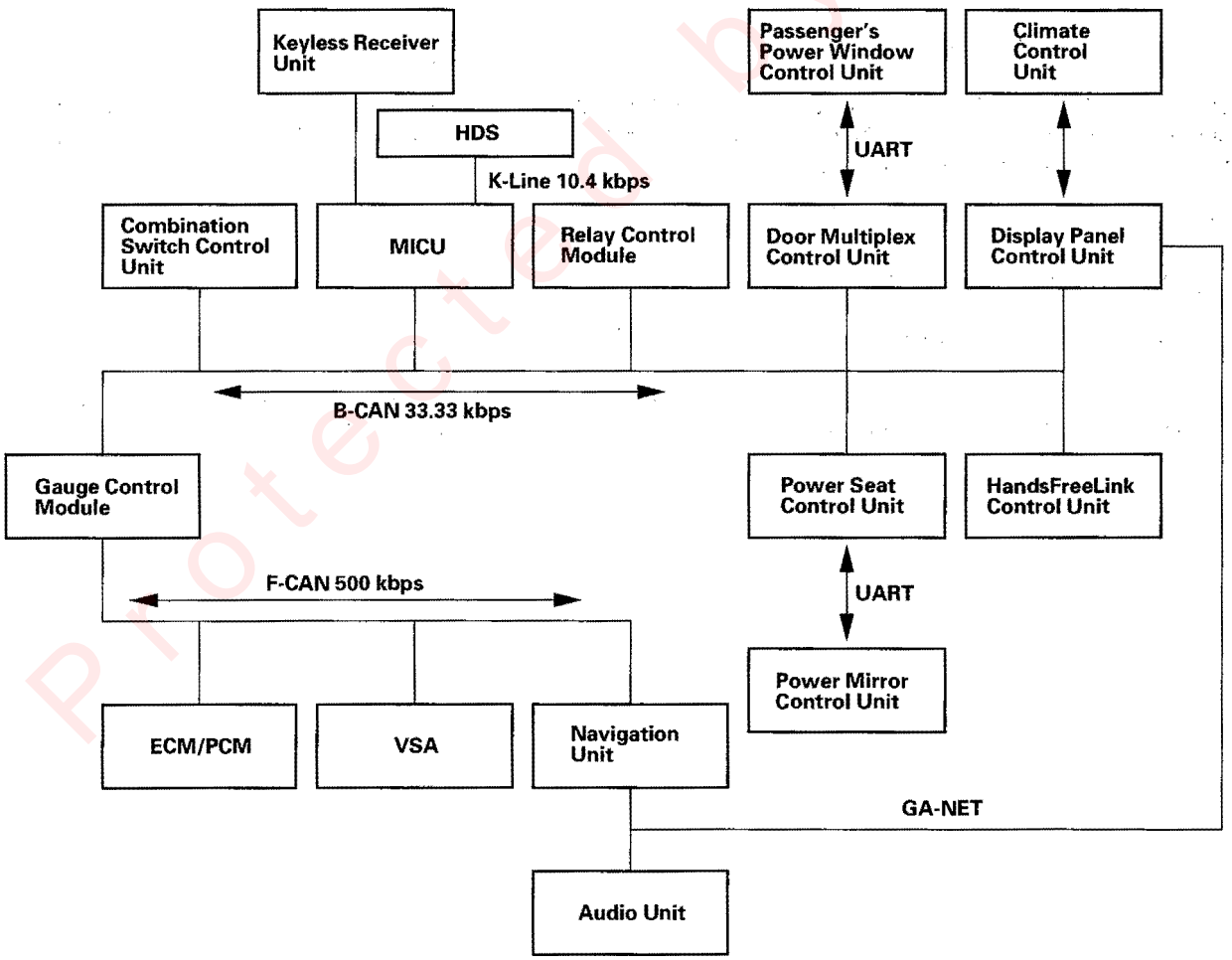

(cont'd)

System Description (cont'd)

Network "Loss of Communication" Error Checking

The B-CAN and the F-CAN send messages to each other to check the integrity of the network communication circuit. They do this by sending a specific digital message out after an event. For example, after turning the ignition switch to ON (II). After the switch to ON, all the ECUs on the communication circuit expect to receive a message from other specific units within a specified amount of time. If the message is not received, the ECU will transmit a DTC reporting that the control units did not communicate.

Examples of communication circuit test

Normal circuit

1. Ignition switch is turned ON (II).
2. The door multiplex control unit transmits a door switch signal.
3. The multiplex integrated control unit (MICU), relay control module, and gauge control module receive the door lock switch signal.
4. The communication circuit test is passed.

Since the door lock switch message was received by all the ECUs expecting to receive a signal, the communication circuit between those units is OK. There are multiple signal sent and received by each ECU during this time to insure that the communication circuit is intact.

Failed circuit

1. Ignition switch is turned ON (II).
2. The door multiplex control unit transmits a door switch signal.
3. The multiplex integrated control unit (MICU), relay control module, and gauge control module expect to receive the door lock switch signal, but since there is a break in the communication circuits, it is not received.

Protected by AR

8. Each ECU that expects to receive the door lock switch signal from the door multiplex control unit will transmit DTCs for the signal that it did not receive.

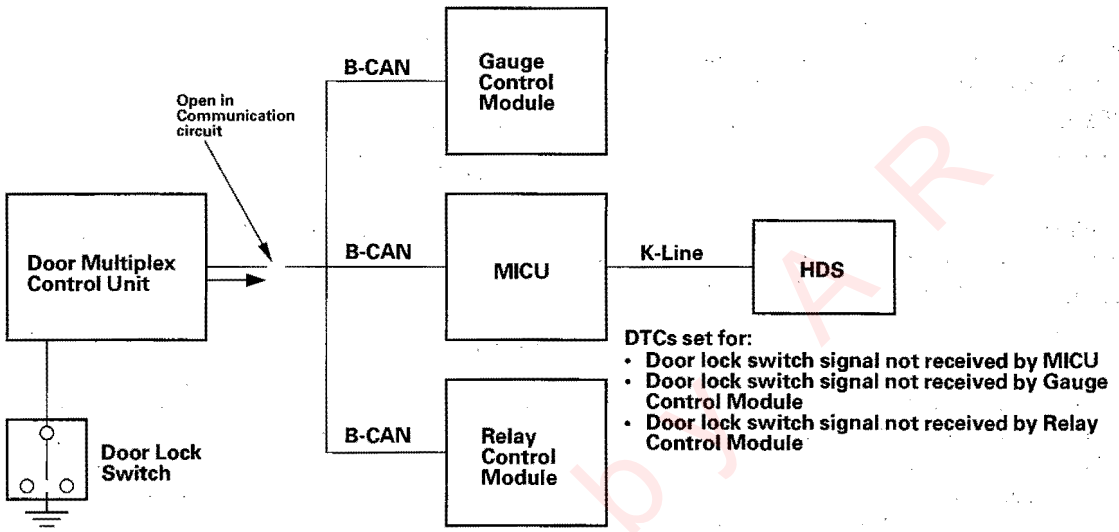

Since there is a break in the communication circuit, the door lock switch signal could not be received by the gauge control module, multiplex integrated control unit (MICU), or the relay control module. Each of these units will set "loss of communication" error codes for the signal(s) they did not receive. There may be multiple communication DTCs if the unit that has become disconnected from the network would normally transmit multiple messages during the communication line test. For example, the door multiplex control unit sends the keyless panic signal and door lock switch signal during the communication circuit test.

Diagnostic Trouble Codes (DTC)

There are three types of DTCs used by the CAN networks.

Internal error DTCs	The ECUs run internal checks. If one finds that there is an internal ECU problem, it will set an internal error DTC. Confirm that the battery and charging system are OK. If so, this indicates that the ECU needs to be replaced.
Loss of communication DTCs	Loss of communication DTCs (and Bus-off DTCs) are set when there is a problem with the communication between ECUs. This could be in the connections, the wiring, or the ECU (as called out in the DTC Troubleshooting index).
Signal error DTCs	The ECUs can run diagnostics on some input circuits to determine if those circuits are functioning properly (no opens or shorts). If a circuit fails the diagnostic test, a DTC will set. (NOTE: Not all input circuit are tested for errors.)

(cont'd)

System Description (cont'd)

B-CAN System Switch Device Index

Combination Switch Control Unit	
Input signal	**Output signal/Device**
Dimmer switch, Lighting switch, Passing switch, Turn signal switch, Wiper/washer switch, Intermittent dwell time controller	None

Relay Control Module	
Input signal	**Output signal/Device**
Daytime running lights control (Canada), Hood switch, Horn switch, Windshield wiper motor, Windshield wiper fail-safe, Rear window defogger	Daytime running lights control (Canada), Headlight, Parking light, Horn, Windshield washer motor, Windshield wiper motor

Door Multiplex Control Unit	
Input signal	**Output signal**
Driver's door key cylinder switch (lock/unlock), Driver's door lock knob switch (lock/unlock), Driver's door lock switch, Driver's power window switches (up, down, auto up, auto down), Passenger's power window switches (up, down), Driver's power window motor pulser, Key-off timer, Keyless receiver unit	Driver's power window motor, Passenger's power window switches, Power window relay control, Passenger's power window enable, Security, Moonroof control unit, Memory seat switches and indicators

Multiplex Integrated Control Unit	
Input signal	**Output signal/Device**
Brake pedal position switch, Door switches, Ignition key cylinder switch, Park pin switch (A/T), Passenger's door lock knob switches (unlock), Passenger's door lock switch, Seat belt switch (unbuckled), Transmission range switch (P, R), Trunk lid latch switch	Door lock actuators, Hazard warning lights, Interior lights, Ignition key light, Key interlock solenoid, Turn signal lights, Moonroof control unit, Trunk lid opener solenoid, Door courtesy lights, Key-off timer, Keyless buzzer

Display Panel Control Unit	
Input signal	**Output signal/Device**
HandsFreeLink, Illumination positive, Illumination negative, Illumination (LED)	Clock, Audio-HVAC subdisplay-clock

Protected by AR

B-CAN System Switch Device Index

Gauge Control Module	
Input signal	**Output signal/Device**
Dash lights brightness controller, Daytime running lights signal (Canada), Engine oil pressure switch signal, Washer fluid level switch signal (Canada), Parking brake switch, Brake fluid level switch, Fuel gauge sending unit, Select/Reset/Information switch, Cruise control combination switch (set, cancel, resume, master), VSA OFF switch, A/T park position, MET INH from ECM/PCM	Dash lights, Fuel gauge, Gauge lights, Indicator, LEDs, Speedometer, Tachometer, ECT gauge, Warning buzzer, Odometer/Outside air temperature display

Climate Control Unit	
Input signal	**Output signal/Device**
Evaporator temperature sensor, In-car temperature sensor, Outside air temperature sensor, Sunlight sensor, Air mix motor position (Driver's and Passenger's), Mode motors position, Blower motor control feedback, Ground (Canada)	Air mix control motors (Driver's/Passenger's), Blower motor transistor, Mode control motors, Recirculation motor

Power Seat Control Unit	
Input signal	**Output signal/Device**
Back-up light switch signal, Driving position memory switch signal, Memory sensors, M/T ground	Driver's power seat motors

Power Mirror Control Unit	
Input signal	**Output signal/Device**
Mirror switches, Mirror position sensors	Mirror actuator

HandsFreeLink Control Unit	
Input signal	**Output signal/Device**
Remoto switches, Microphone input (without navigation), Microphone input (with navigation) via navigation unit, Bluetooth communication with cellphone	HandsFreeLink information

Protected by A R

(cont'd)

System Description (cont'd)

HDS Inputs and Commands

System Menu	Data List	Data List Indication
Wiper	Brake Pedal Position Switch	Brake pedal pushed: ON Brake pedal released: OFF
	Windshield Wiper Motor Park Switch	Wipers in park position: ON Wipers in other position: OFF
	Windshield Wiper Switch (BACK-UP)	Wiper switch in HI position: ON Wiper switch in other position: OFF
	Windshield Wiper Switch (LOW)	Wiper switch in LOW position: ON Wiper switch in other position: OFF
	Windshield Wiper Switch (HIGH)	Wiper switch in HI position: ON Wiper switch in other position: OFF
	Windshield Wiper Switch (MIST)	Wiper switch in MIST position: ON Wiper switch in other position: OFF
	Windshield Washer Switch	Washer switch on: ON Washer switch off: OFF
	Windshield Wiper Motor HI Command	Wiper high speed command on: ON Wiper high speed command off: OFF
	Windshield Wiper Motor Lo Command	Wiper low speed command on: ON Wiper high low command off: OFF
	Windshield Washer Motor Command	Washer command on: ON Washer command off: OFF
	Intermittent Wiper Dwell Timer	Switch at short setting: about 0.0 Switch at long setting: about 250

Protected by

System Menu	Data List	Data List Indication
Power window	Driver's Door Switch	Door open: ON Door closed: OFF
	Front Passenger's Door Switch	Door open: ON Door closed: OFF
	P/W Main Switch	On: ON Off: OFF
	P/W Master Switch (Driver's window AUTO)	Auto position: ON Neutral position: OFF
	P/W Master Switch (Driver's window UP)	Up position: ON Neutral position: OFF
	P/W Master Switch (Driver's window DOWN)	Down position: ON Neutral position: OFF
	P/W Master Sw. (Front Passenger's Wndw UP)	Up position: ON Neutral position: OFF
	P/W Master Sw. (Front Passenger's Wndw DOWN)	Down position: ON Neutral position: OFF
	P/W Master Switch (Left Rear window UP)	UP position: ON Neutral position: OFF
	P/W Master Switch (Left Rear window DOWN)	Down position: ON Neutral position: OFF
	P/W Master Sw. (Right Rear Wndw UP)	UP position: ON Neutral position: OFF
	P/W Master Sw. (Right Rear Wndw DOWN)	Down position: ON Neutral position: OFF
	Driver's P/W Motor Pulse A	Window in motion: DETECT Window stopped: NONE
	Driver's P/W Motor Pulse B	Window in motion: DETECT Window stopped: NONE
	Driver's P/W Motor Command	OFF/UP/DOWN
	Front Passenger's P/W Motor Command	OFF/UP/DOWN
	Left Rear P/W Motor Command	OFF/UP/DOWN
	Right Rear P/W Motor Command	OFF/UP/DOWN
	P/W Relay Command	On command: ON Off command: OFF
	Moonroof Timer Command	Enabled: ON Disabled: OFF
	P/W Master Sw. (Passenger's Wndw AUTO)	Auto position: ON Neutral position: OFF
	Power Window Passenger's Side, UP Switch	Up position: ON Neutral position: OFF
	Power Window Passenger's Side, DOWN Switch	Down position: ON Neutral position: OFF
	Power Window Passenger's Side, AUTO Switch	Down position: ON Neutral position: OFF
	Passenger's Power Window Motor Pulse A	Window in motion: DETECT Window stopped NONE
	Passenger's Power Window Motor Pulse B	Window in motion: DETECT Window stopped NONE
	Moonroof Command	OFF/CLOSE/OPEN

Protected by FSR

(cont'd)

System Description (cont'd)

System Menu	Data List	Data List Indication
Lighting	Driver's Door Switch	Door open: ON Door closed: OFF
	Ignition Switch (IG1)	Ignition ON (II): ON Other positions: OFF
	Headlight Switch (OFF)	In off position: ON In other positions: OFF
	Headlight Switch (PARKING)	In park light position: ON In other positions: OFF
	Headlight Switch (HEADLIGHT)	In headlight position: ON In other position: OFF
	Headlight Switch (BACK-UP)	In headlight position: ON In headlight position: OFF
	Headlight Switch (DIMMER)	In high-beam position: ON In low-beam position: OFF
	Headlight Switch (PASSING)	Passing switch on: ON Passing switch off: OFF
	Turn Signal Switch (LEFT)	In left position: ON Neutral position: OFF
	Turn Signal Switch (RIGHT)	In right position: ON Neutral position: OFF
	Fog Light Sw.	Switch on: ON Switch on: OFF
	Ignition Key Cylinder Light Command	Light on command: ON Light off command: OFF
	Interior Light Command	Light on command: ON Light off command: OFF
	Left Turn Signal Command	Light on command: ON Light off command: OFF
	Right Turn Signal Command	Light on command: ON Light off command: OFF
	Headlight Command	Light on command: ON Light off command: OFF
	Headlight High Beam Command	Light on command: ON Light off command: OFF
	Parking Light Command	Light on command: ON Light off command: OFF
	Fog Light Command	Light on command: ON Light off command: OFF
	Rear Defroster Command	Defroster on command: ON Defroster off command: OFF
	DRL Command (Canada)	DRL on command: ON DRL off command: OFF

Protected by CARFAX

System Menu	Data List	Data List Indication
Gauge	Driver's Door Switch	Door open: ON Door closed:OFF
	Front Passenger's Door Switch	Door open: ON Door closed:OFF
	Driver's Rear Door Switch	Door open: ON Door closed:OFF
	Passenger's Rear Door Switch	Door open: ON Door closed:OFF
	Trunk Lid/Tailgate Switch	Trunk open: ON Trunk closed: OFF
	Headlight Switch (OFF)	In off position: ON In other positions: OFF
	Headlight Switch (PARKING)	In park light position: ON In other positions: OFF
	Headlight Switch (HEADLIGHT)	In headlight position: ON In other positions: OFF
	Headlight Switch (DIMMER)	In high-beam position: ON In low-beam position: OFF
	Headlight Switch (PASSING)	Passing switch on: ON Passing switch off: OFF
	Turn Signal Switch (LEFT)	In left position: ON Neutral position: OFF
	Turn Signal Switch (RIGHT)	In right position: ON Neutral position: OFF
	Left Turn Signal Command	Light on command: ON Light off command: OFF
	Right Turn Signal Command	Light on command: ON Light off command: OFF
	Headlight Command	Light on command: ON Light off command: OFF
	Headlight High Beam Command	Light on command: ON Light off command: OFF
	Parking Light Command	Light on command: ON Light off command: OFF
	Brake Pedal Position Switch	Brake pedal pushed: ON Brake pedal released: OFF
	Fog Light Sw.	Switch on: ON Switch off: OFF
	Cruise Control Main Switch	Switch on: ON Switch off: OFF
	Cruise Control Set Sw.	Switch pushed: ON Switch released: OFF
	Cruise Control Resume Sw.	Switch pushed: ON Switch released: OFF
	VSA/TCS Off Sw.	Switch on: ON Switch off: OFF
	Illumination Volume Plus Switch	Switch pushed: ON Switch released: OFF
	Illumination Volume Minus Switch	Switch pushed: ON Switch released: OFF
	Illumination Volume Max Switch	Switch pushed: ON Switch released: OFF
	Select/Reset Switch	Switch pushed: ON Switch released: OFF
	INFO Previous Switch	Switch pushed: ON Switch released: OFF
	INFO Next Switch	Switch pushed: ON Switch released: OFF

(cont'd)

System Description (cont'd)

System Menu	Data List	Data List Indication
Gauge	Ignition Key Cylinder Switch	Key in ignition: ON Key out of ignition: OFF
	Driver's Seat Belt Buckle Switch	Unbuckled: ON Buckled: OFF
	Cruise Control Main Sw. Indicator (Operation Lamp)	Cruise set: ON Cruise not set: OFF
	Engine Oil Pressure Switch	Engine off (low pressure): ON Engine running: OFF
	Washer Fluid Level Switch	Fluid level low: ON Fluid level normal: OFF
	Gauge Select/Reset Switch	Reset button pushed: ON Reset button released: OFF
	Parking Brake Switch	Park brake lever pulled: ON Park brake lever released: OFF
	Brake Fluid Level Switch	Fluid level low: ON Fluid level normal: OFF
	Fuel Sending Unit Input 1	Fuel tank empty: 4V Fuel tank half full: 2.5V Fuel tank full: 1V
	Fuel Sending Unit Input 2	Fuel tank empty: 5° Fuel tank half full: 50° Fuel tank full: 100°
	ABS Indicator	Indicator command on: ON Indicator command off: OFF
	EBD (Brake Light) Indicator	Indicator command on: ON Indicator command off: OFF
	MIL Indicator	Indicator command on: ON Indicator command off: OFF
	Washer Fluid Level Indicator (Canada)	Indicator command on: ON Indicator command off: OFF
	DRL Indicator (Canada)	Indicator command on: ON Indicator command off: OFF
	Low Oil Pressure Indicator	Indicator command on: ON Indicator command off: OFF
	Charging System Indicator	Indicator command on: ON Indicator command off: OFF
	Cruise Master Switch ON Indicator	Indicator command on: ON Indicator command off: OFF
	Maintenance Required Indicator	Indicator command on: ON Indicator command off: OFF
	High Beam Indicator	Indicator command on: ON Indicator command off: OFF
	Parking Light ON Indicator	Indicator command on: ON Indicator command off: OFF
	Low Fuel Warning Indicator	Indicator command on: ON Indicator command off: OFF
	Front Fog Indicator	Indicator command on: ON Indicator command off: OFF
	Fuel Gauge Needle Command	Fuel tank empty: 4V Fuel tank half full: 2.5V Fuel tank full: 1V
	VSA/TCS Active Indicator	Indicator command on: ON Indicator command off: OFF
	VSA/TCS Indicator (Warning)	Indicator command on: ON Indicator command off: OFF

Protected by CARFAX

System Menu	Data List	Data List Indication
Door lock	Driver's Door Switch	Door open: ON Door closed: OFF
	Front Passenger's Door Switch	Door open: ON Door closed: OFF
	Driver's Rear Door Switch	Door open: ON Door closed: OFF
	Passenger's Rear Door Switch	Door open: ON Door closed: OFF
	Driver's Door Lock Switch (LOCK)	Switch pushed: ON Switch released: OFF
	Driver's Door Lock Switch (UNLOCK)	Switch pushed: ON Switch released: OFF
	Front Passenger's Door Lock Sw. (LOCK)	Switch pushed: ON Switch released: OFF
	Front Passenger's Door Lock Sw. (UNLOCK)	Switch pushed: ON Switch released: OFF
	Driver's Door Lock Knob Switch (LOCK)	Knob up: ON Knob down: OFF
	Driver's Door Lock Knob Switch (UNLOCK)	Knob up: ON Knob down: OFF
	Front Passenger's Door Lock Knob Sw. (UNLOCK)	Knob up: ON Knob down: OFF
	Driver's Rear Door Lock Knob Switch (UNLOCK)	Knob up: ON Knob down: OFF
	Passenger's Rear Door Lock Knob Switch (UNLOCK)	Knob up: ON Knob down: OFF
	Driver's Door Key Cylinder Switch (LOCK)	Key turned to lock: ON Neutral position: OFF
	Driver's Door Key Cylinder Switch (UNLOCK)	Key turned to unlock: ON Neutral position: OFF
	Door LOCK Command	Lock command: ON Other: OFF
	Door UNLOCK Command	Unlock command: ON Other: OFF
	Driver's Door UNLOCK Command	Unlock command: ON Other: OFF
Climate control	A/C Pressure Switch/Thermal Protector	A/C on: ON

Protected by AR

(cont'd)

System Description (cont'd)

System Menu	Data List	Data List Indication
Keyless	Driver's Door Switch	Door open: ON Door closed: OFF
	Front Passenger's Door Switch	Door open: ON Door closed: OFF
	Driver's Rear Door Switch	Door open: ON Door closed: OFF
	Passenger's Rear Door Switch	Door open: ON Door closed: OFF
	Trunk Lid/Tailgate Switch	Trunk open: ON Trunk closed: OFF
	Driver's Door Lock Switch (LOCK)	Switch pushed: ON Switch released: OFF
	Driver's Door Lock Switch (UNLOCK)	Switch pushed: ON Switch released: OFF
	Front Passenger's Door Lock Sw. (LOCK)	Switch pushed: ON Switch released: OFF
	Front Passenger's Door Lock Sw. (UNLOCK)	Switch pushed: ON Switch released: OFF
	Driver's Door Lock Knob Switch (LOCK)	Knob up: ON Knob down: OFF
	Driver's Door Lock Knob Switch (UNLOCK)	Knob up: ON Knob down: OFF
	Front Passenger's Door Lock Knob Sw. (UNLOCK)	Knob up: ON Knob down: OFF
	Driver's Rear Door Lock Knob Switch (UNLOCK)	Knob up: ON Knob down: OFF
	Passenger's Rear Door Lock Knob Sw. (UNLOCK)	Knob up: ON Knob down: OFF
	Driver's Door Key Cylinder Switch (LOCK)	Key turned to lock: ON Neutral position: OFF
	Driver's Door Key Cylinder Switch (UNLOCK)	Key turned to lock: ON Neutral position: OFF
	Ignition Switch (IG1)	Ignition ON (II): ON Other positions: OFF
	Door LOCK Command	Lock command: ON Other: OFF
	Door UNLOCK Command	Unlock command: ON Other: OFF
	Driver's Door UNLOCK Command	Unlock command: ON Other: OFF
	Trunk Lid Release Command	Release command: ON Other: OFF
	Keyless Buzzer Command	Buzzer on command: ON Buzzer off command: OFF

Protected by CARFAX

System Menu	Data List	Data List Indication
Security	Driver's Door Switch	Door open: ON Door closed: OFF
	Front Passenger's Door Switch	Door open: ON Door closed: OFF
	Driver's Rear Door Switch	Door open: ON Door closed: OFF
	Passenger's Rear Door Switch	Door open: ON Door closed: OFF
	Trunk Lid/Tailgate Switch	Trunk open: ON Trunk closed: OFF
	Hood Switch	Hood open: ON Hood closed: OFF
	Driver's Door Lock Switch (LOCK)	Switch pushed: ON Switch released: OFF
	Driver's Door Lock Switch (UNLOCK)	Switch pushed: ON Switch released: OFF
	Front Passenger's Door Lock Sw. (LOCK)	Switch pushed: ON Switch released: OFF
	Front Passenger's Door Lock Sw. (UNLOCK)	Switch pushed: ON Switch released: OFF
	Driver's Door Lock Knob Switch (LOCK)	Knob up: ON Knob down: OFF
	Driver's Door Lock Knob Switch (UNLOCK)	Knob up: ON Knob down: OFF
	Front Passenger's Door Lock Knob Sw. (UNLOCK)	Knob up: ON Knob down: OFF
	Driver's Rear Door Lock Knob Switch (UNLOCK)	Knob up: ON Knob down: OFF
	Passenger's Rear Door Lock Knob Sw. (UNLOCK)	Knob up: ON Knob down: OFF
	Driver's Door Key Cylinder Switch (LOCK)	Key turned to lock: ON Neutral position: OFF
	Driver's Door Key Cylinder Switch (UNLOCK)	Key turned to unlock: ON Neutral position: OFF
	Ignition Switch (IG1)	Ignition ON (II): ON Other position: OFF
	Horn Command	Horn on command: ON Horn off command: OFF
	Door LOCK Command	Lock command: ON Other: OFF
	Door UNLOCK Command	Unlock command: ON Other: OFF
	Driver's Door UNLOCK Command	Unlock command: ON Other: OFF
	Trunk Lid Release Command	Release command: ON Other: OFF
	Headlight Command	Light on command: ON Light off command: OFF
	Headlight High Beam Command	Light on command: ON Light off command: OFF
	Parking Light Command	Light on command: ON Light off command: OFF
	Security Indicator Command	Indicator on command: ON Indicator off command: OFF

(cont'd)

System Description (cont'd)

System Menu	Data List	Data List Indication
Display Panel Control Unit	OFF Switch	Switch on: ON Switch off: OFF
	DUAL Switch	Switch on: ON Switch off: OFF
	Recirculate Switch	Switch on: ON Switch off: OFF
	A/C Compressor Switch	Switch on: ON Switch off: OFF
	Rear Defroster Switch	Switch on: ON Switch off: OFF
	Driver Temp Up Switch	Switch on: ON Switch off: OFF
	Driver Temp Down Switch	Switch on: ON Switch off: OFF
	Passenger Temp Up Switch	Switch on: ON Switch off: OFF
	Passenger Temp Down Switch	Switch on: ON Switch off: OFF
	Driver Temp AUTO Switch	Switch on: ON Switch off: OFF
	Passenger Temp AUTO Switch	Switch on: ON Switch off: OFF
	Driver MODE Switch	Switch on: ON Switch off: OFF
	Passenger MODE Switch	Switch on: ON Switch off: OFF
	Fan Speed Up Switch	Fan speed up switch pushed: ON Fan speed up switch release: OFF
	Fan Speed Down Switch	Fan speed down switch pushed: ON Fan speed down switch release: OFF
	Navi Map/Guide Switch	Switch on: ON Switch off: OFF
	Navi Menu Switch	Switch on: ON Switch off: OFF
	Navi Setup Switch	Switch on: ON Switch off: OFF
	Navi Info Switch	Switch on: ON Switch off: OFF
	Navi Zoom In Switch	Switch pushed: ON Switch release: OFF
	Navi Zoom Out Switch	Switch pushed: ON Switch release: OFF
	Navi Cancel Switch	Switch on: ON Switch off: OFF
	Navi Audio Switch	Switch on: ON Switch off: OFF

Protected by U.S.A.R.

System Menu	Data List	Data List Indication
Display Panel Control Unit	Joystick-Enter	Joystick enter: ON Other position: OFF
	Joystick-Up	Joystick up: ON Other position: OFF
	Joystick-Up Right	Joystick up right: ON Other position: OFF
	Joystick-Right	Joystick right: ON Other position: OFF
	Joystick-Down Right	Joystick down right: ON Other position: OFF
	Joystick-Down	Joystick down: ON Other position: OFF
	Joystick-Down Left	Joystick down left: ON Other position: OFF
	Joystick-Left	Joystick left: ON Other position: OFF
	Joystick-Up Left	Joystick left up: ON Other position: OFF
	Rear Defogger Indicator	Indicator command on: ON Indicator command off: OFF
	DEF Indicator	Indicator command on: ON Indicator command off: OFF
	Recirculation Indicator	Indicator command on: ON Indicator command off: OFF
	DUAL Indicator	Indicator command on: ON Indicator command off: OFF
	Display Backlight (Navi)	Backlight command on: ON Backlight command off: OFF
	Front Panel Segment LCD (Non-Navi)	On command: ON Off command: OFF
	Subdisplay Segment LCD (Navi)	On command: ON Off command: OFF

Protected by R

(cont'd)

System Description (cont'd)

Output

System	Description	Data List
Gauge	Speedometer displays value inputted	Speedometer
	Tachometer displays value inputted	Tachometer
	Fuel gauge displays value inputted	Fuel Level Gauge
	Temperature gauge displays value inputted	Engine Temperature Gauge
	Turns VSA activation indicator on/off	VSA/TCS Activation Indicator
	Turns VSA indicator on/off	VSA/TCS Indicator
	Turns ABS indicator on/off	ABS Indicator
	Turns EBD indicator on/off	EBD Indicator
	Turns cruise indicator on/off	Cruise Activation Indicator
	Turns MIL on/off	MIL Status
	Turns DRL indicator on/off	Daytime Running Light Indicator (Canada)
	Turns low oil pressure indicator on/off	Engine Oil Pressure Indicator
	Turns charging system indicator on/off	Charging System Indicator
	Turns cruise main indicator on/off	Cruise Control Main Switch Indicator
	Turns high beam indicator on/off	High Beam Indicator
	Turns lights-on indicator on/off	Light On Indicator
	Turns low fuel indicator on/off	Low Fuel Indicator
	Turns fog light indicator on/off	Front Fog Light Indicator
	Displays inputted value	Trip Meter
	Turns A/T P position indicator on/off	A/T Gear Position Indicator (P)
	Turns A/T R position indicator on/off	A/T Gear Position Indicator (R)
	Turns A/T N position indicator on/off	A/T Gear Position Indicator (N)
	Turns A/T D position indicator on/off	A/T Gear Position Indicator (D)
	Turns A/T M position indicator on/off	A/T Gear Position Indicator (M)
	Turns A/T 1 position indicator on/off	A/T Gear Position Indicator (L)
	Turns S-mode segment on/off	Sequential Shift
	Controls gauge illumination brightness to inputted value	Illumination Brightness Control
	Turns key-in beeper on/off	Key Alarm Chime
	Turns lights-on beeper on/off	Headlight Alarm Chime
	Turns seat belt reminder beeper on/off	Seat belt Reminder Chime
	Rewriting the odo data, etc	METER REPLACEMENT (ODO REWRITE etc.)
Ligthing	Turns ignition ley light on/off	Ignition Key Cylinder Light Command
	Turns interior lights on/off	Interior Light Command
	Turns left turn signal lights on/off	Left Turn Signal Command
	Turns right turn signal lights on/off	Right Turn Signal Command
	Turns headlights on/off	Headlight Command
	Turns headlights high beam on/off	Headlight High Beam Command
	Turns parking lights on/off	Parking Light Command
	Turns fog lights on/off	Front Fog Light
	Turns daytime running lights on/off	Daytime Running Light Signal (Canada)

Protected by R

Output

System	Description	Data List
Keyless	Turns trunk lid opener solenoid on/off	Trunk Lid/Tailgate Release Command
	Turns keyless buzzer on/off	Keyless Buzzer
Power window	Runs driver's window up	Driver's Window Up
	Runs driver's window down	Driver's Window Down
	Runs front passenger's window up	Front Passenger's Window Up
	Runs front passenger's window down	Front Passenger's Window Down
	Runs left rear window up	Left Rear Window Up
	Runs left rear window down	Left Rear Window Down
	Runs right rear window up	Right Rear Window Up
	Runs right rear window down	Right Rear Window Down
	Turns power window relay on/off	Power Window Relay
	Runs moonroof open/close	Moonroof:Open/Close
	Reset power window master switch	Resetting the power window—Driver side
	Reset front passenger's window switch	Resetting the power window—Assistant side
Wiper	Turns wiper low speed on/off	Windshield Wiper Motor Low Command
	Turns wiper high speed on/off	Windshied Wiper Motor Hight Command
	Turns washer on/off	Windshied Washer Command
	Turns rear window defogger on/off	Rear Deffoger
Security	Turns horns on/off	Horn Command
	Turns security indicator on/off	Security Indicator
Display panel* control unit	Turns TFT-LCD backlight on/off	Front Panel Display: TFT-LCD backlight (With Navi)—Turn on for 5s.
	Turns segment LCD on/off	Front Panel Display: Segment LCD (Without Navi)—Turn on for 5s.
	Turns subdisplay segment LCD on/off	Front Panel Display: Sub display segment LCD—Turn on for 5s.
Power seat and power mirror	Turns driving position memory switch indicator 1 on/off	Power Seat: Memory Position 1 Indicator
	Turns driving position memory switch indicator 2 on/off	Power Seat: Memory Position 2 Indicator
	Runs slide motor forward	Power Seat: Slide Motor—Full Forward
	Runs slide motor backward	Power Seat: Slide Motor—Full Backward
	Runs front up-down motor up	Power Seat: Front UP-DOWN Motor—Full Up
	Runs front up-down motor down	Power Seat: Front UP-DOWN Motor—Full Down
	Runs rear up-down motor up	Power Seat: Rear UP-DOWN Motor—Full Up
	Runs rear up-down motor down	Power Seat: Rear UP-DOWN Motor—Full Down
	Runs recline motor forward	Power Seat: Recline Motor—Full Forward
	Runs recline motor backward	Power Seat: Recline Motor—Full Backward
	Turns memory buzzer on for 5 seconds	Power Seat: memory Buzzer—5 seconds
	Runs left power mirror up	Power Mirror: Left Power Mirror—Full Up
	Runs left power mirror down	Power Mirror: Left Power Mirror—Full Down
	Runs left power mirror right	Power Mirror: Left Power Mirror—Full Right
	Runs left power mirror left	Power Mirror: Left Power Mirror—Full Left
	Runs right power mirror up	Power Mirror: Right Power Mirror—Full Up
	Runs right power mirror down	Power Mirror: Right Power Mirror—Full Down
	Runs right power mirror right	Power Mirror: Right Power Mirror—Full Right
	Runs right power mirror left	Power Mirror: Right Power Mirror—Full Left

Protected

Troubleshooting - B-CAN System Diagnosis Test Mode A

Perform this diagnosis first if the symptom is related to the B-CAN system.

NOTE: Always cycle the ignition switch within 3 seconds when prompted in the DTC troubleshooting procedures in this section.

1. Check the symptom against this list of B-CAN related systems:

   - Gauge control module
   - Exterior lights
   - Turn signals
   - Entry light control
   - Interior lights
   - Safety indicators
   - Rear window defogger
   - HandsFreeLink
   - Horns (security and panic)
   - Chimes (key, seat belt, lights-on and parking brake)
   - Power windows
   - Power window/moonroof timer
   - Wiper/washer
   - Security
   - Keyless entry
   - Power door locks
   - Climate control
   - Key interlock
   - Dash light brightness
   - Driving position memory

   Is the symptom related to the B-CAN system?

   YES—Go to step 2.

   NO—Go to the system troubleshooting for the system with the symptom.■

2. Connect the Honda Diagnostic System (HDS), then turn the ignition switch ON (II).

3. From the BODY ELECTRICAL SYSTEM SELECTION MENU, select UNIT INFORMATION, and then select CONNECTED UNIT listed to see if it is communicating with the HDS.

   - MICU
   - Door multiplex control unit
   - Gauge control module
   - Combination switch control unit
   - Relay control module
   - Display panel control unit
   - Power seat control unit
   - HandsFreeLink control unit

   NOTE:
   - If the unit is communicating with the scan tool or the HDS, DETECT will be displayed.
   - If the unit is not communicating, "Not Available" will be displayed.

   Are all control units communicating with the HDS?

   YES—Go to step 4.

   NO—If any of them are not communicating, go to B-CAN System Diagnosis Test Mode B (see page 22-109). If all units are not communicating, go to DTC B1000 troubleshooting (see page 22-118).■

Protected by AR

4. Select the system that has the problem from the BODY ELECTRICAL SYSTEM SELECTION MENU, then select DTCs.

   Are any DTCs indicated?

   YES—Go to step 5.

   NO—If the problem is related to one of the following items, go to B-CAN System Diagnosis Test Mode C (see page 22-110).

   - Exterior lights
   - Turn signals
   - Entry light control
   - Interior lights
   - Horns (security and panic)
   - Power windows
   - Wiper/washer
   - Power door locks

   If the problem is related to one of the following items, go to the troubleshooting for that individual system.■

   - Gauge control module
   - Safety indicators
   - Chimes (key, seat belt and lights-on)
   - Rear window defogger (climate control)
   - Security
   - Keyless entry
   - Climate control
   - Key interlock
   - Dash light brightness
   - Audio system
   - Navigation
   - Driving position memory
   - HandsFreeLink

5. Record all DTCs, and sort them by DTC type using the DTC Troubleshooting Index.

6. Troubleshoot the DTC(s) in this order:

   - Battery voltage DTCs.
   - Internal error DTCs.
   - Loss of communication DTCs. Begin troubleshooting with the lowest number first (Example: if DTC B1006 and B1058 are retrieved, begin by troubleshooting B1006).
   - Signal error DTCs.

Troubleshooting - B-CAN System Diagnosis Test Mode B

Perform this diagnosis if any of the control units are not communicating (Not Available is displayed in the HDS) as found by the B-CAN System Diagnosis Test Mode A.

1. Using the HDS, select the system that has the symptom from the BODY ELECTRICAL SYSTEM SELECTION MENU.

2. Select DTCs, and then check for loss of communication DTCs (use the DTC Troubleshooting Index to find the DTC type).

   Are any loss of communication DTCs indicated?

   YES—Go to step 3.

   NO—Replace the MICU.■

3. Perform the input test for the unit not communicating with the HDS.

Unit not communicating
MICU (see page 22-130)
Door multiplex control unit (see page 22-135)
Gauge control module (see page 22-134)
Relay control module (see page 22-137)
Display panel control unit (see page 22-435)
Combination switch control unit (see page 22-136)
Power seat control unit (see page 22-348)
HandsFreeLink control unit (see page 22-445)

Protected by ARR

Troubleshooting - B-CAN System Diagnosis Test Mode C

Perform this diagnosis if a component that is controlled by the B-CAN system does not stop or turn off.

NOTE:
- If the component does not turn ON, go to B-CAN System Diagnosis Test Mode D (see page 22-111).
- See the B-CAN system unit input/output index for a list of input and output devices and the control units that monitor the input and controls the output devices (see page 22-94).
- Always cycle the ignition switch within 3 seconds when prompted in the DTC troubleshooting procedures in this section.

1. Check for DTCs by selecting the TEST MODE MENU from the HDS.

   Are any DTCs indicated?

   YES—Go to B-CAN System Diagnosis Test Mode A (see page 22-108).■

   NO—Go to step 2.

2. Turn OFF the switch that controls the malfunctioning component.

3. Select DATA LIST from the TEST MODE MENU, and check the input of the switch that controls the component.

   Does the HDS indicate the switch is OFF?

   YES—Go to step 4.

   NO—Go to step 6.

4. In the DATA LIST, check the output signal of the malfunctioning component.

   Is the output signal OFF?

   YES—Go to step 5.

   NO—Replace the control unit that controls the device that will not turn OFF (see page 22-96).■

5. Check the relay if applicable, then check for a short in the wire between the relay and the component, relay and control unit or the component and control unit.

   Are the relay and the wire harness OK?

   YES—Replace the control unit that controls the component that will not turn OFF.■

   NO—Replace the relay or repair the wire harness.■

6. Check the switch, then check for a short in the wire between the switch and the control unit that monitors the switch.

   Is the switch and wire harness OK?

   YES—Replace the control unit that monitors the switch.■

   NO—Replace the switch or repair the wire harness.■

Protected by A R

Troubleshooting - B-CAN System Diagnosis Test Mode D

Perform this diagnosis a component that is controlled by the B-CAN system does not run or come on.

NOTE:
- If the component does not turn off or stop, go to B-CAN System Diagnosis Test Mode C (see page 22-110).
- See the B-CAN system unit input/output index for a list of input and output devices and the control units that monitor the input and controls the output devices (see page 22-95).
- Always cycle the ignition switch within 3 seconds when prompted in the DTC troubleshooting procedures in this section.

1. Check the fuse of the malfunctioning output device.

   Is the fuse OK?

   YES—Go to step 2.

   NO—Replace the fuse and recheck.■

2. Check for DTCs by selecting the TEST MODE MENU from the HDS.

   Are any DTCs indicated ?

   YES—Go to B-CAN System Diagnosis Test Mode A (see page 22-108).■

   NO—Go to step 3.

3. Turn ON the switch that controls the malfunctioning component.

4. Select DATA LIST from the TEST MODE MENU, and check output signal for the malfunctioning component.

   Is there an output signal?

   YES—Go to step 5.

   NO—Go to step 9.

5. Check the relay and ground, then check for an open or a short in the circuit for the malfunctioning component.

   Are the relay and circuit OK?

   YES—Go to step 6.

   NO—Replace the relay or repair the wire circuit.■

6. Perform the function test for the malfunctioning component.

   Does the output device pass the function test?

   YES—Go to step 7.

   NO—Replace the component.■

7. With the malfunctioning output device connected, connect a voltmeter between the malfunctioning output device and body ground on the wire that the control unit uses to control the output device circuit.

8. Select MISC. TEST from the TEST MODE MENU, and do the forced operation test of the malfunctioning component.

   Is there a change in voltage (12 V to 0 V or 0 V to 12 V)?

   YES—Replace the component.■

   NO—Replace the control unit that controls the malfunctioning component.■

9. Select DATA LIST from the TEST MODE MENU, and make sure the switch signal input for the malfunctioning system indicates a change when operated.

   Does the switch input indicated ON when the switch is ON?

   YES—Replace the control unit that controls the malfunctioning component.■

   NO—Go to step 10.

10. Check the switch and its ground (if applicable), then check for an open or a short in the wire between the switch and the control unit that monitors it.

    Is the switch and the wire harness OK?

    YES—Replace the control unit that monitors the switch.■

    NO—Replace the switch or repair the wire harness.■

Protected by FSR

Troubleshooting - B-CAN System Diagnosis Test Mode 1

Perform this diagnosis if the HDS is not available.

1. Check the No. 7 (7.5A) fuse and No. 21 (7.5A) fuse in the under-dash fuse/relay box.

   Are the fuses OK?

   YES—Go to step 2.

   NO—Find and repair the cause of the blown fuse. ■

2. Remove the left kick panel (see page 20-62).

3. Turn the ignition switch ON (II), and move the interior light switch in middle position.

4. Connect the MPCS service connector (A) to the MCIC socket (B) in the under-dash fuse/relay box.

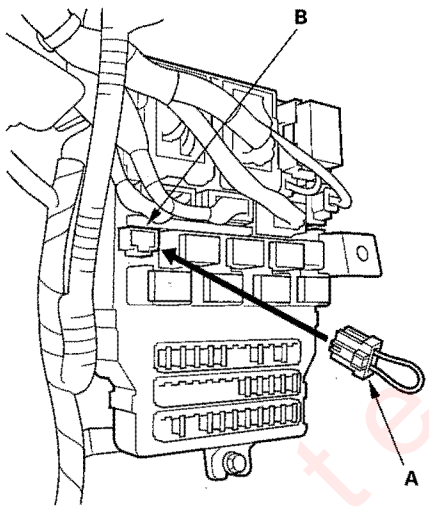

5. Wait 5 seconds, and watch the map lights. When the system enters Mode 1, the front and rear map lights will flash quickly once, and a double beep will be heard.

6. If there is a DTC, the map lights and ignition key light will blink, pause, then repeat the DTC as long as the ignition switch ON (II).

   Is there a repeating DTC?

   YES—Count the blinks, then go to step 7.

   NO—Go to step 8.

7. About 1 second after you go into self-diagnosis Mode 1, the map lights will indicate the DTC, and repeat it every 3 seconds. If there is more than one DTC, the system will indicate them in ascending order, beginning from the DTC with the lowest numerical value. Troubleshoot the DTCs as indicated below:
   - DTC 2, 3, 4 and 5 simultaneously: Check for an open in the BLU wire between multiplex integrated control unit D11 and relay control module I7, BRN/BLK wire between multiplex integrated control unit J4 and door multiplex control unit A5, LT GRN wire between multiplex integrated control unit X27 and combination switch control unit No. 4, BRN/YEL wire between multiplex integrated control unit N28 and gauge B11. If the wire is OK, substitute a known-good under-dash fuse/relay box (multiplex integrated control unit), under-hood fuse/relay box, power window master switch, wiper/washer switch and gauge one at a time, in that order, and recheck for the DTCs after each substitution.
   - DTC 1 only: Go to MICU input test (see page 22-130).
   - DTC 2 only (no other DTCs present): Go to the relay control module input test. If all inputs are OK, substitute a known-good relay control module and then a MICU, one at a time, and then check for DTCs. If a DTC recurs after a substitution, replace that unit.
   - DTC 3 only (no other DTCs present): Go to the door multiplex control unit input test. If all inputs are OK, substitute a known-good door multiplex control unit and then a MICU, one at a time, and then check for DTCs. If a DTC recurs after a substitution, replace that unit.
   - DTC 4 only (no other DTCs present): Go to the combination switch control unit input test. If all inputs are OK, substitute a known-good wiper/washer switch and then a MICU, one at a time, and then check for DTCs. If a DTC recurs after a substitution, replace that unit.
   - DTC 5 only (no other DTCs present): Go to the gauge control module input test. If all inputs are OK, substitute a known-good gauge control module and then a MICU, one at a time, and then check for DTCs. If a DTC recurs after a substitution, replace that unit.

Protected by ...

DTC	Cause
1	The MICU cannot receive signals from the BUS communication line.
2	The MICU cannot receive signals from the relay control module communication line.
3	The MICU cannot receive signals from the power window communication line.
4	The MICU cannot receive signals from the combination switch communication line.
5	The MICU cannot receive signals from the gauge control module.

8. Check for B-CAN DTCs indicated by the gauge control module while still in Test Mode 1.

   Are any DTCs indicated?

   YES—Go to step 9.

   NO—Go to step 11.

9. Record all DTCs and sort them by type using the DTC Troubleshooting Index.

10. Troubleshoot the DTCs in these order:

    - Battery voltage DTCs
    - Internal error DTCs
    - Loss of communication DTCs (begin with the lowest number first; for example, if B1006 and B1059 are retrieved, troubleshoot B1006 first)
    - Signal error DTCs

Test Mode 2:

11. Remove the MPCS service connector from the under-dash fuse/relay box socket for 5—10 seconds, then re-insert it to enter Mode 2. When the system enters Mode 2, the front and rear map lights will flash two times quickly.

    NOTE: If the MPCS connector is disconnected for too short or too long of a time, or the ignition switch is turned OFF, the system will return to Test Mode 1.

12. In the table below is a list of circuits that can be checked in Test Mode 2. Operate the switch that is most closely related to the problem. If the circuit is OK, the map lights will blink once. If the circuit is faulty, there will be no indication.

MICU

Item
Driver's door switch (OPEN)
Front passenger's door switch (OPEN)
Left rear door switch (OPEN)
Right rear door switch (OPEN)
Trunk lid latch switch (OPEN)
Front passenger's door lock knob switch (UNLOCK)*
Left rear door lock knob switch (UNLOCK)
Right rear door lock knob switch (UNLOCK)*
Audio-HVAC display module security ground (disconnected)
Driver's seat belt switch (unbuckled)
Brake pedal position switch (ON; brake pedal pressed)
Passenger's door lock switch (LOCK/UNLOCK)

* The front passenger's and door lock knob switches must be in the locked position when beginning the test.

RELAY CONTROL MODULE

Item
Windsheld wiper switch (AUTO STOP/PARK)
Hood switch (open)
A/C pressure switch/thermal protector (A/C ON)

COMBINATION SWITCH CONTROL UNIT

Item
Turn signal switch (LEFT)
Turn signal switch (RIGHT)
Combination light switch (ON; each position)
Dimmer switch (ON)
Passing switch (ON)
Windshield wiper switch (ON)
Intermittent wiper dwell timer
Windshield washer switch (ON)

(cont'd)

Troubleshooting - B-CAN System Diagnosis Test Mode 1 (cont'd)

POWER WINDOW MASTER SWITCH (DOOR MULTIPLEX CONTROL UNIT)

Item
Power window master switch (Driver's window UP)
Power window master switch (Driver's window DOWN)
Power window master switch (Driver's window AUTO UP)
Power window master switch (Driver's window AUTO DOWN)
Power window master switch (Front passenger's window UP)
Power window master switch (Front passenger's window DOWN)
Power window master switch (Left rear window UP)
Power window master switch (Left rear window DOWN)
Power window master switch (Right rear window UP)
Power window master switch (Right rear window DOWN)
Driver's door key cylinder switch* (LOCK)
Driver's door key cylinder switch* (UNLOCK)
Driver's door lock switch (LOCK)
Driver's door lock switch (UNLOCK)
Driver's door lock knob switch (LOCK)
Driver's door lock knob switch (UNLOCK)
Driver's position memory switches (1, 2, memo)
Passenger's power window switch
Passenger's power window switch (UP)
Passenger's power window switch (DOWN)
Passenger's power window switch (AUTO UP)
Passenger's power window switch (AUTO DOWN)

* A second key is necessary to check the key cylinder inputs.
Be sure to rotate the key cylinder switch two times to each position (lock and lock, unlock and unlock) to ensure the door lock knob switch is in the appropriate position.

GAUGE CONTROL MODULE

Item
Parking brake switch (ON; parking brake applied)
Cruise control main SET/RESUME/CANCEL switch (ON; switch pressed)
Transmission range switch (P, R, N, D)
Washer fluid level switch (fluid removed) (Canada)
Brake fluid level switch (fluid removed)
Illumination control switches (+, −, MAX)
MID switches (Select/Reset, <INFO, INFO>)

POWER SEAT CONTROL UNIT

Item
Power seat slide switch (Forward, Backward)
Power seat front up-down switch (UP, Down)
Power seat rear up-down switch (UP, Down)
Power seat recline switch (Forward, Recline)

POWER MIRROR CONTROL UNIT

Item
Mirror select switch (Left, Center, Right)
Mirror switch (Left, Right, Up, Down)

Does the map lights indicate proper switch operation?

YES—Go to function and input test for the system related to the failure.■

NO—Repair the open, short, or replace the faulty switch.■

Protected by MAR

Gauge Control Module DTC Display

While in Test Mode 1, the DTCs which have been detected and stored individually by various B-CAN (Body-controller Area Network) units, will be shown one by one on the multi-information display when the communication between the Multiplex Integrated Control Unit (MICU) and the gauge control module is normal. To scroll through the DTCs, press the select/reset switch beside the gauge control module.

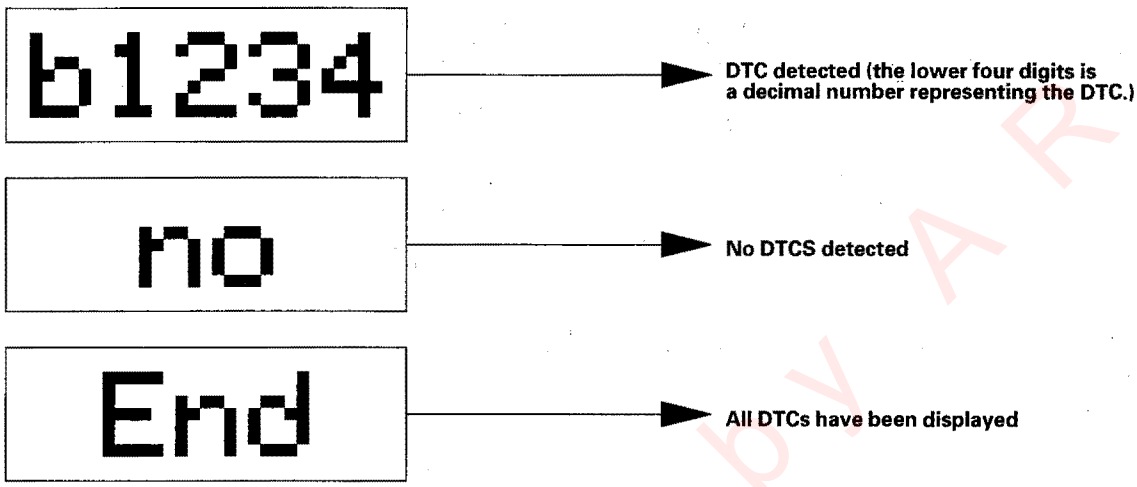

The unit that has been stored the code can be identified by the number shown on the multi-information display.

MICU	10
Relay control module	11
Door multiplex control unit	30
Gauge control module	50
Climate control unit	51
Display panel control unit	52
Combination switch control unit	70
HandsFreeLink control unit	94
Power seat control unit	95

How to clear the DTC

While in Test Mode 1, press and hold down the SELECT/RESET switch button for more than 13 seconds.

Protected by AR

Multiplex Integrated Control System (MICS)

Circuit Diagram

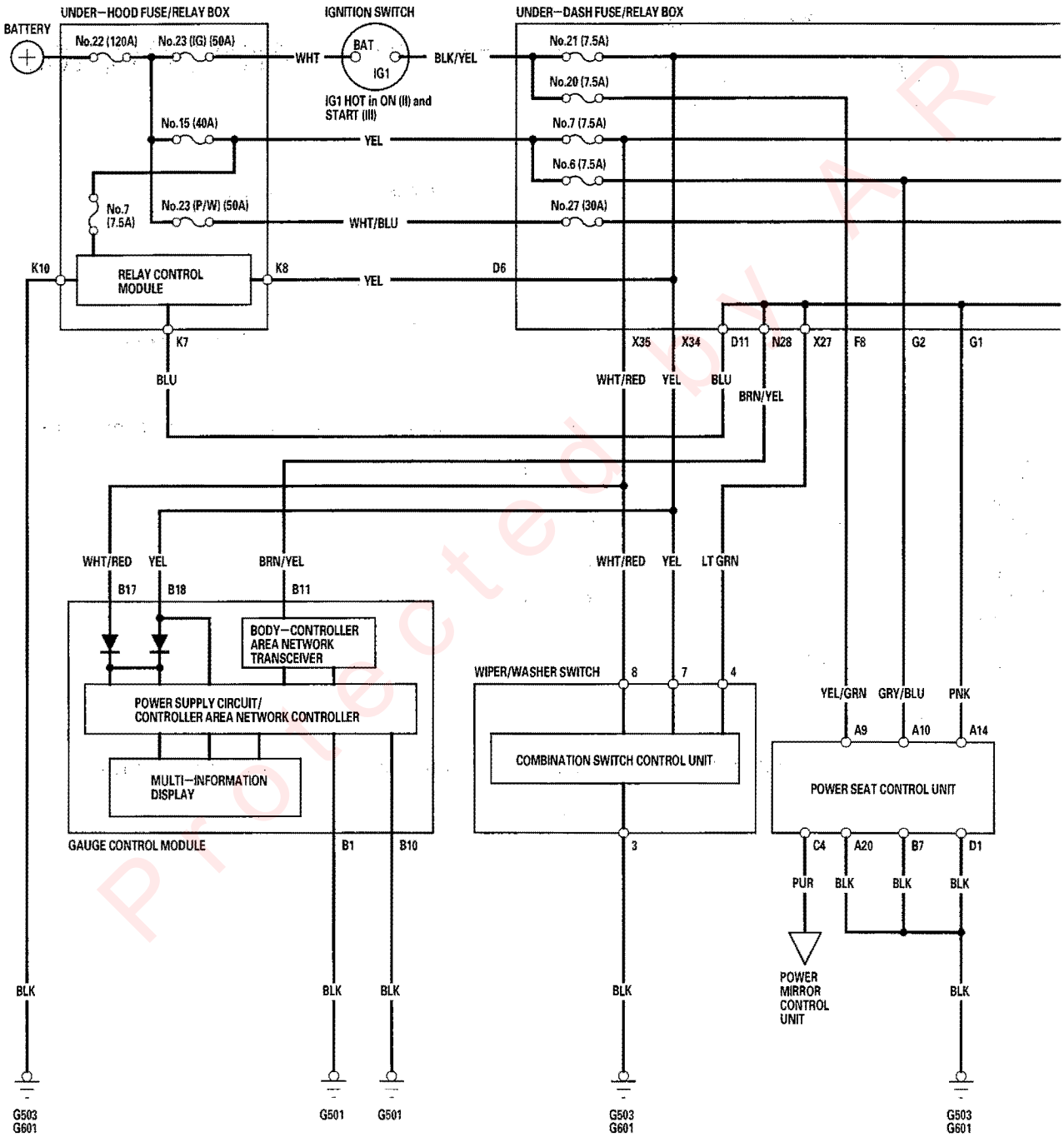

Protected by AR

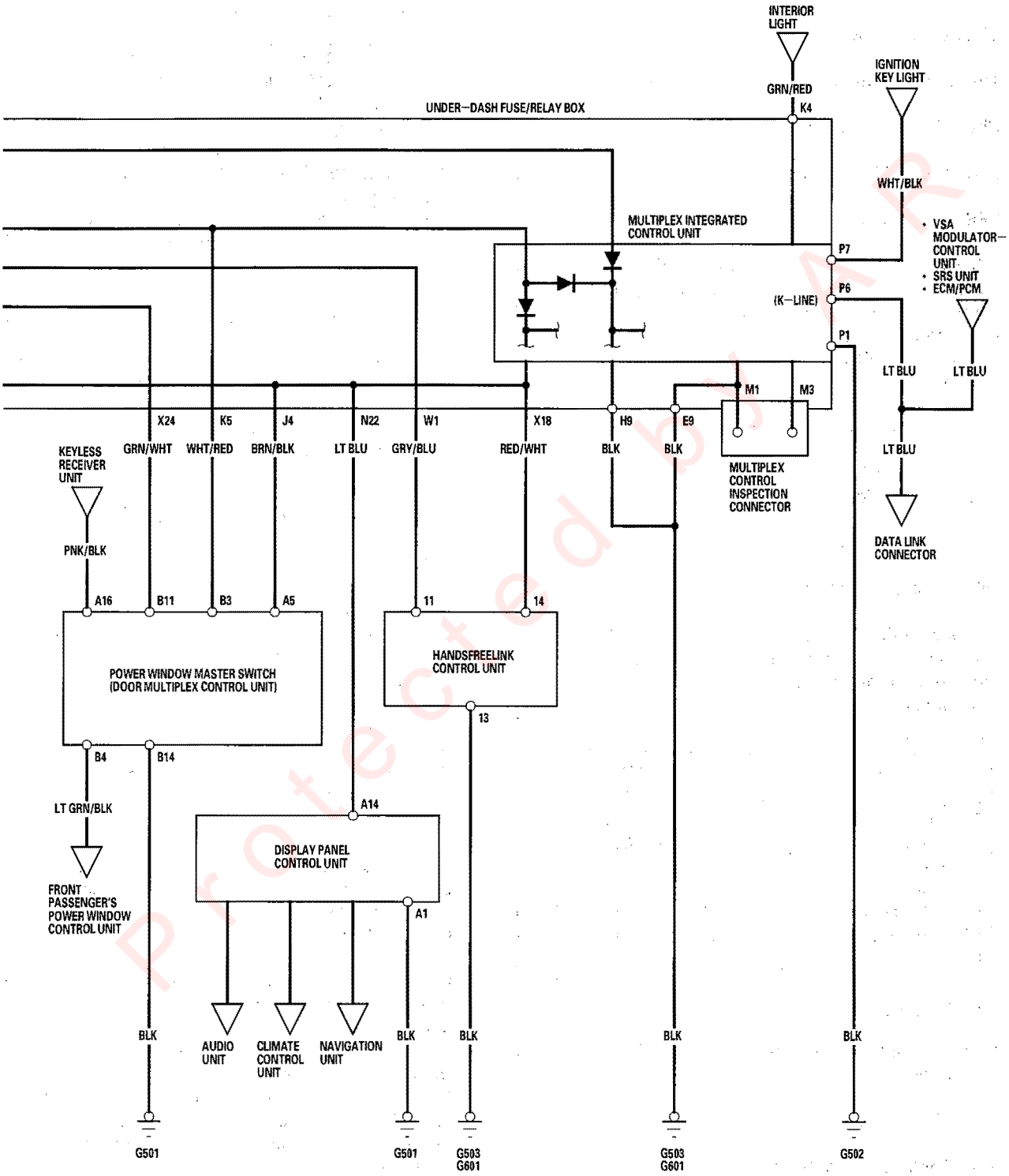

Protected by AR

DTC Troubleshooting

DTC B1000: Communication Bus Line Error

1. Clear the DTCs with the HDS.
2. Turn the ignition switch OFF, and then back ON (II).
3. Check for DTCs with the HDS.

   Is DTC B1000 indicated?

   YES—Go to step 4.

   NO—Intermittent failure. The communication bus line is OK at this time. Check for loose or poor connections, or worn/shorted wires. If the connections are good, check the battery condition (see page 22-74) and the charging system (see page 4-25).■
4. Check for DTCs with the HDS.

   Are DTC B1005, B1006, B1007, B1008, B1010, and B1011 indicated?

   YES—Go to step 5.

   NO—Replace the MICU.■
5. Disconnect the appropriate connector at each control unit in the table one at a time. Clear the DTC, then recheck for DTCs after each unit is disconnected.

Control Unit	Appropriate Connector
Gauge Control Module	Connector B (18P)
Relay Control Module	Connector I (10P)
Door Multiplex Control Unit	Power window master switch connector A (22P)
Combination switch Control Unit	Connector (8P)
Power Seat Control Unit	Connector A (20P)
Display Panel Control Unit	Connector A (14P)
HandsFreeLink Control Unit	Connector (22P)

   Is DTC B1000 indicated with each individual unit disconnected?

   YES—Go to step 6.

   NO—Replace the control unit that was disconnected and B1000 did not reset.■
6. Disconnect all of the appropriate connectors for each of the units in the table.

Control Unit	Appropriate Connector
Gauge Control Module	Connector B (18P)
Relay Control Module	Connector K (10P)
Door Multiplex Control Unit	Power window master switch connector A (22P)
Combination Switch Control Unit	Connector (8P)
Power Seat Control Unit	Connector A (20P)
Display Panel Control Unit	Connector A (14P)
HandsFreeLink Control Unit	Connector (22P)

7. Disconnect under-dash fuse/relay box connectors X (39P), N (45P), J (30P), G (8P), D (17P).
8. Check for continuity between each of the under-dash fuse/relay box terminals listed in the table below and body ground.

Connected Control Unit	Under-dash fuse/relay box terminal
Gauge Control Module	N28
Relay Control Module	D11
Door Multiplex Control Unit	J4
Combination Switch Control Unit	X27
Power Seat Control Unit	G1
Display Panel Control Unit	N22
HandsFreeLink Control Unit	X18

   Is there continuity?
   YES—Repair the short in the wire between the under-dash fuse/relay box and the connected control unit.■
   NO—Go to step 9.
9. Check for voltage between each of the under-dash fuse/relay box terminals listed in the table above and body ground.

   Is there 1 V or less?
   YES—Replace the under-dash fuse/relay box.■
   NO—Repair the short in the wire between the under-dash fuse/relay box and the connected control unit.■

Protected by AK

DTC B1050: Communication Bus Line Error

NOTE: If you are troubleshooting multiple DTCs, be sure to follow the instructions in B-CAN system diagnosis test mode A (see page 22-108).

1. Clear the DTCs with the HDS.
2. Turn the ignition switch OFF, and then back ON (II).
3. Check for DTCs with the HDS.

   Is DTC B1050 indicated?

   YES—Go to step 4.

   NO—Intermittent failure, the system is OK at this time. Check for loose or poor connections at relay control module connector K (10P), and at under-dash fuse/relay box connector D (17P).■
4. Check for DTCs with the HDS.

   Is DTC B1000 indicated?

   YES—Troubleshoot DTC B1000.■

   NO—If the B1050 is indicated, replace the relay control module.■

DTC B1100: Communication Bus Line Error

NOTE: If you are troubleshooting multiple DTCs, be sure to follow the instructions in B-CAN system diagnosis test mode A (see page 22-108).

1. Clear the DTCs with the HDS.
2. Turn the ignition switch OFF, and then back ON (II).
3. Check for DTCs with the HDS.

   Is DTC B1100 indicated?

   YES—Go to step 4.

   NO—Intermittent failure, the system is OK at this time. Check for loose or poor connections at door multiplex connector A (22P), and at under-dash fuse/relay box connector J (30P).■
4. Check for DTCs with the HDS.

   Is DTC B1000 indicated?

   YES—Troubleshoot DTC B1000.■

   NO—If the B1100 is indicated, replace the door multiplex control unit.■

Protected by A R

DTC Troubleshooting (cont'd)

DTC B1150: Communication Bus Line Error

NOTE: If you are troubleshooting multiple DTCs, be sure to follow the instructions in B-CAN system diagnosis test mode A (see page 22-108).

1. Clear the DTCs with the HDS.
2. Turn the ignition switch OFF, and then back ON (II).
3. Check for DTCs with the HDS.

   Is DTC B1150 indicated?

   YES—Go to step 4.

   NO—Intermittent failure, the system is OK at this time. Check for loose or poor connections at gauge control module connector B (18P), and at under-dash fuse/relay box connector N (45P).■
4. Check for DTCs with the HDS.

   Is DTC B1000 indicated?

   YES—Troubleshoot DTC B1000.■

   NO—If the B1150 is indicated, replace the gauge control module.■

DTC B1250: Communication Bus Line Error

NOTE: If you are troubleshooting multiple DTCs, be sure to follow the instructions in B-CAN system diagnosis test mode A (see page 22-108).

1. Clear the DTCs with the HDS.
2. Turn the ignition switch OFF, and then back ON (II).
3. Check for DTCs with the HDS.

   Is DTC B1250 indicated?

   YES—Go to step 4.

   NO—Intermittent failure, the system is OK at this time. Check for loose or poor connections at combination switch control unit connector (8P), and at under-dash fuse/relay box connector X (39P).■
4. Check for DTCs with the HDS.

   Is DTC B1000 indicated?

   YES—Troubleshoot DTC B1000.■

   NO—If the B1250 is indicated, replace the combination switch control unit.■

Protected by A R

DTC B1700: Communication Bus Line Error

NOTE: If you are troubleshooting multiple DTCs, be sure to follow the instructions in B-CAN system diagnosis test mode A (see page 22-108).

1. Clear the DTCs with the HDS.
2. Turn the ignition switch OFF, and then back ON (II).
3. Check for DTCs with the HDS.

   Is DTC B1700 indicated?

   YES—Go to step 4.

   NO—Intermittent failure, the system is OK at this time. Check for loose or poor connections at display panel control unit connector A (14P), and at under-dash fuse/relay box connector N (45P).■
4. Check for DTCs with the HDS.

   Is DTC B1000 indicated?

   YES—Troubleshoot DTC B1000.■

   NO—If the B1700 is indicated, replace the display panel control unit.■

DTC B1750: Communication Bus Line Error

NOTE: If you are troubleshooting multiple DTCs, be sure to follow the instructions in B-CAN system diagnosis test mode A (see page 22-108).

1. Clear the DTCs with the HDS.
2. Turn the ignition switch OFF, and then back ON (II).
3. Check for DTCs with the HDS.

   Is DTC B1750 indicated?

   YES—Go to step 4.

   NO—Intermittent failure, the system is OK at this time. Check for loose or poor connections at HandsFreeLink control unit connector (22P), and at under-dash fuse/relay box connector X (39P).■
4. Check for DTCs with the HDS.

   Is DTC B1000 indicated?

   YES—Troubleshoot DTC B1000.■

   NO—If the B1750 is indicated, replace the HandsFreeLink control unit.■

Protected by A R

DTC Troubleshooting (cont'd)

DTC B1800: Communication Bus Line Error

NOTE: If you are troubleshooting multiple DTCs, be sure to follow the instructions in B-CAN system diagnosis test mode A (see page 22-108).

1. Clear the DTCs with the HDS.
2. Turn the ignition switch OFF, and then back ON (II).
3. Check for DTCs with the HDS.

   Is DTC B1800 indicated?

   YES—Go to step 4.

   NO—Intermittent failure, the system is OK at this time. Check for loose or poor connections at power seat control unit connector A (22P), and at under-dash fuse/relay box connector G (6P).■
4. Check for DTCs with the HDS.

   Is DTC B1000 indicated?

   YES—Troubleshoot DTC B1000.■

   NO—If the B1800 is indicated, replace the power seat control unit.■

Protected by AR

DTC B1001: Multiplex Integrated Control Unit (MICU) Internal Error (CPU Error)

NOTE: If you are troubleshooting multiple DTCs, be sure to follow the instructions in B-CAN system diagnosis test mode A (see page 22-108).

1. Clear the DTCs with the HDS.
2. Turn the ignition switch OFF, and then back ON (II).
3. Operate the door lock (LOCK/UNLOCK).
4. Check for DTCs with the HDS.

   Is DTC B1001 indicated?

   YES—Faulty MICU; replace the under-dash fuse/relay box.■

   NO—Intermittent failure, the MICU is OK at this time. Check for loose or poor connections. If the connections are good, check the battery condition (see page 22-74) and the charging system (see page 4-25).■

DTC B1002: Multiplex Integrated Control Unit (MICU) Internal Error (EEPROM Error)

NOTE: If you are troubleshooting multiple DTCs, be sure to follow the instructions in B-CAN system diagnosis test mode A (see page 22-108).

1. Clear the DTCs with the HDS.
2. Turn the ignition switch OFF, and then back ON (II).
3. Operate the door lock (LOCK/UNLOCK).
4. Check for DTCs with the HDS.

   Is DTC B1002 indicated?

   YES—Faulty MICU; replace the under-dash fuse/relay box.■

   NO—Intermittent failure, the MICU is OK at this time. Check for loose or poor connections. If the connections are good, check the battery condition (see page 22-74) and the charging system (see page 4-25).■

Protected by AR

DTC Troubleshooting (cont'd)

DTC B1102: Door Multiplex Control Unit Internal Error

NOTE: If you are troubleshooting multiple DTCs, be sure to follow the instructions in B-CAN system diagnosis test mode A (see page 22-108).

1. Clear the DTCs with the HDS.
2. Turn the ignition switch OFF, and then back ON (II).
3. Operate the power window (UP/DOWN).
4. Check for DTCs with the HDS.

   Is DTC B1102 indicated?

   YES—Faulty door multiplex control unit; replace the power window master switch. ■

   NO—Intermittent failure, the door multiplex control unit is OK at this time. Check for loose or poor connections. If the connections are good, check the battery condition (see page 22-74) and the charging system (see page 4-25). ■

Protected by AR

DTC B1005: MICU Lost Communication with Relay Control Module

NOTE: If you are troubleshooting multiple DTCs, be sure to follow the instructions in B-CAN system diagnosis test mode A (see page 22-108).

1. Clear the DTCs with the HDS.
2. Turn the ignition switch OFF, and then back ON (II).
3. Check for DTCs with the HDS.

   Is DTC B1005 indicated?

   YES—Go to step 4.

   NO—Intermittent failure, the relay control module is OK at this time. Check for loose or poor connection at relay control module connector K (10P), and at under-dash fuse/relay box connector D (17P). If the connections are good, check the battery condition (see page 22-74) and the charging system (see page 4-25).■
4. Check for DTCs with the HDS.

   Is DTC B1158 indicated?

   YES—Go to Relay Control Module Input Test (see page 22-137).■

   NO—Check for an open in the communication circuit between the MICU and the relay control module. If the circuit is OK, replace the MICU. If the circuit is bad, repair the open.■

DTC B1006: MICU Lost Communication with Door Multiplex Control Unit (Door Lock Switch Message)

NOTE: If you are troubleshooting multiple DTCs, be sure to follow the instructions in B-CAN system diagnosis test mode A (see page 22-108).

1. Clear the DTCs with the HDS.
2. Turn the ignition switch OFF, and then back ON (II).
3. Check for DTCs with the HDS.

   Is DTC B1006 indicated?

   YES—Go to step 4.

   NO—Intermittent failure, the door multiplex control unit is OK at this time. Check for loose or poor connection at door multiplex connector A (22P), and at under-dash fuse/relay box connector J (30P). If the connections are good, check the battery condition (see page 22-74) and the charging system (see page 4-25).■
4. Check for DTCs with the HDS.

   Are DTC B1160 and B1058 indicated?

   YES—Go to Door Multiplex Control Unit Input Test (see page 22-135).

   NO—Check for an open in the communication circuit between the MICU and the door multiplex control unit. If the circuit is OK, replace the MICU. If the circuit is bad, repair the open.■

Protected by AR

DTC Troubleshooting (cont'd)

DTC B1007: MICU Lost Communication with the Combination Switch Control Unit (Headlight Switch Message)

NOTE: If you are troubleshooting multiple DTCs, be sure to follow the instructions in B-CAN system diagnosis test mode A (see page 22-108).

1. Clear the DTCs with the HDS.
2. Turn the ignition switch OFF, and then back ON (II).
3. Check for DTCs with the HDS.

   Is DTC B1007 indicated?

   YES—Go to step 4.

   NO—Intermittent failure, the MICU is OK at this time. Check for loose or poor connection at combination switch control unit connector (8P), and at under-dash fuse/relay box connector X (39P). If the connections are good, check the battery condition (see page 22-74) and the charging system (see page 4-25).■
4. Check for DTCs with the HDS.

   Are DTC B1155 and B1062 indicated?

   YES—Go to the Combination Switch Control Unit Input Test (see page 22-136).

   NO—Check for an open in the communication circuit between the MICU and the combination switch control unit. If the circuit is OK, replace the MICU. If the circuit is bad, repair the open.■

DTC B1008: MICU Lost Communication with the Gauge Control Module (A/T Message)

NOTE: If you are troubleshooting multiple DTCs, be sure to follow the instructions in B-CAN system diagnosis test mode A (see page 22-108).

1. Clear the DTCs with the HDS.
2. Turn the ignition switch OFF, and then back ON (II).
3. Check for DTCs with the HDS.

   Is DTC B1008 indicated?

   YES—Go to step 4.

   NO—Intermittent failure, the gauge control module is OK at this time. Check for loose or poor connection at gauge control module connector B (18P), and at under-dash fuse/relay box connector N (45P). If the connections are good, check the battery condition (see page 22-74) and the charging system (see page 4-25).■
4. Check for DTCs with the HDS.

   Is DTC B1061 or B1808 indicated?

   YES—Go to the Gauge Control Module Input Test (see page 22-134).

   NO—Check for an open in the communication circuit between the MICU and the gauge control module. If the circuit is OK, replace the MICU. If the circuit is bad, repair the open.■

Protected by AR

DTC B1010: MICU Lost Communication with the Door Multiplex Control Unit (Panic Message)

NOTE: If you are troubleshooting multiple DTCs, be sure to follow the instructions in B-CAN system diagnosis test mode A (see page 22-108).

1. Clear the DTCs with the HDS.
2. Turn the ignition switch OFF, and then back ON (II).
3. Check for DTCs with the HDS.

   Is DTC B1010 indicated?

   YES—Go to step 4.

   NO—Intermittent failure, the door multiplex control unit is OK at this time. Check for loose or poor connection at door multiplex connector A (22P), and at under-dash fuse/relay box connector J (30P). If the connections are good, check the battery condition (see page 22-74) and the charging system (see page 4-25).■
4. Check for DTCs with the HDS.

   Is DTC B1059 indicated?

   YES—Go to the Door Multiplex Control Unit Input Test (see page 22-135).

   NO—Check for an open in the communication circuit between the MICU and the door multiplex control unit. If the circuit is OK, replace the MICU. If the circuit is bad, repair the open.■

DTC B1011: MICU Lost Communication (VSP/NE Message) with the Gauge Control Module

NOTE: If you are troubleshooting multiple DTCs, be sure to follow the instructions in B-CAN system diagnosis test mode A (see page 22-108).

1. Clear the DTCs with the HDS.
2. Turn the ignition switch OFF, and then back ON (II).
3. Check for DTCs with the HDS.

   Is DTC B1011 indicated?

   YES—Go to step 4.

   NO—Intermittent failure, the gauge control module is OK at this time. Check for loose or poor connection at gauge control module connector B (18P), and at under-dash fuse/relay box connector N (45P). If the connections are good, check the battery condition (see page 22-74) and the charging system (see page 4-25).■
4. Check for DTCs of the relay control module, display panel control unit and power seat control unit with the HDS.

   Are DTC B1060, B1706 and B1805 indicated?

   YES—Go to the Gauge Control Module Input Test (see page 22-134).

   NO—Check for an open, or a short to power or ground in the communication circuit between the MICU and the gauge control module. If the circuit is OK, replace the MICU. If the circuit is bad, repair the open, or short to power or ground.■

Protected by AP

DTC Troubleshooting (cont'd)

DTC B1080: Power Supply Circuit (IG1 Line) Input Error for Relay Control Module and MICU

NOTE: If you are troubleshooting multiple DTCs, be sure to follow the instructions in B-CAN system diagnosis test mode A (see page 22-108).

1. Clear the DTC with the HDS.
2. Turn the ignition switch OFF, and then back ON (II).
3. Check for DTCs with the HDS.

   Is DTC B1080 indicated?

   YES—Go to step 4.

   NO—Intermittent failure, check for loose or poor connections at the relay control module connector K (10P) and under-dash fuse/relay box connector D (17P). If the connections are OK, check the battery condition (see page 22-74) and the charging system (see page 4-25).■
4. Check the MICU IG1 power supply No. 21 (7.5A) fuse in the under-dash fuse/relay box.

   Is the fuse OK?

   YES—Go to step 5.

   NO—Replace the fuse and recheck for DTCs.■
5. Turn the ignition switch OFF.
6. Disconnect the under-hood fuse/relay box connector K (10P).
7. Turn the ignition switch ON (II).
8. Measure voltage between the No. 6 terminal of the under-hood fuse/relay box connector K (10P) and body ground.

   UNDER-HOOD FUSE/RELAY BOX CONNECTOR K (10P)

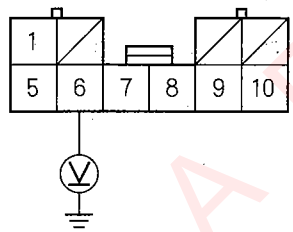

   Wire side of female terminals

   Is there battery voltage?

   YES—Go to step 9.

   NO—Open in the wire between the under-hood fuse/relay box and the under-dash fuse/relay box. Repair the wire and recheck for DTCs.■
9. Check for continuity between the No. 10 terminal of the under-hood fuse/relay box connector K (10P) and body ground.

   UNDER-HOOD FUSE/RELAY BOX CONNECTOR K (10P)

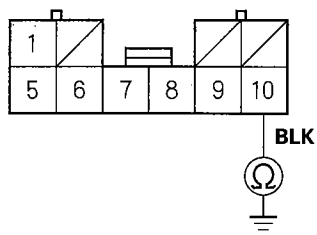

   Wire side of female terminals

   Is there continuity?

   YES—Faulty relay control module; replace the under-hood fuse/relay box.■

   NO—Open in the wire between the under-hood fuse/relay box and G503, G601. If the wire is OK, inspect the G503 and G601.■

Protected by AR

DTC B1255: Combination Switch Control Unit Lost Communication With MICU

NOTE: If you are troubleshooting multiple DTCs, be sure to follow the instructions in B-CAN system diagnosis test mode A (see page 22-108).

1. Clear the DTCs with the HDS.
2. Turn the ignition switch OFF, and then back ON (II).
3. Check for DTCs with the HDS.

   Is DTC B1255 indicated?

   YES—Go to step 4.

   NO—Intermittent failure, MICU is OK at this time. Check for loose or poor connection at combination switch control unit connector (8P), and at under-dash fuse/relay box connector X (39P). If the connections are good, check the battery condition (see page 22-74) and the charging system (see page 4-25).■
4. Check for DTCs with the HDS.

   Is DTC B1055, B1157 or B1806 indicated?

   YES—Go to MICU Input Test (see page 22-130).■

   NO—Replace the combination switch control unit.■

Protected by AR

Multiplex Integrated Control Unit Input Test

NOTE: Make sure the ignition switch is OFF before troubleshooting the under-dash fuse/relay box connectors.

1. Remove the left side kick panel (see page 20-62).
2. Disconnect the under-dash fuse/relay box connectors D, E, F, G, H, J, K, M, N, P, W and X.

   NOTE: All connectors are wire side of female terminals.

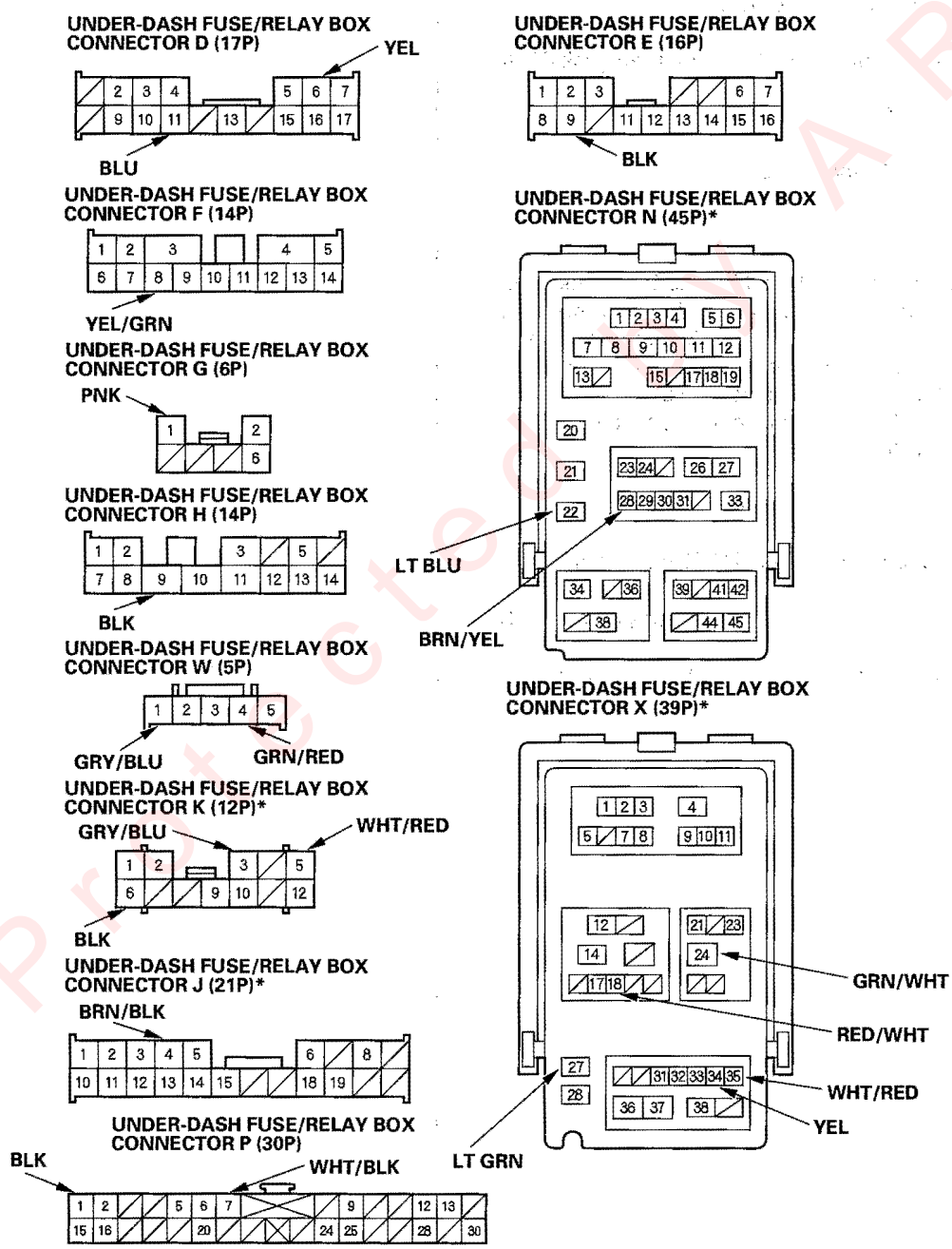

*** Connector view shown rotated 180° from actual position in the under-dash fuse/relay box.**

Protected by COPYRIGHT

3. Inspect the connector and socket terminals to be sure they are all making good contact.

   - If the terminals are bent, loose or corroded, repair them as necessary, and recheck the system.
   - If the terminals look OK, go to step 4.

4. With the connectors still disconnected from the under-hood fuse/relay box, make these input tests at the connector(s).

   - If any test indicates a problem, find and correct the cause, then recheck the system.
   - If all the input tests prove OK, go to step 5.

Cavity	Wire	Test condition	Test: Desired result	Possible cause if result is not obtained
E9 . H9	BLK	Under all conditions	Check for continuity to ground: There should be continuity.	• Poor ground (G503, G601) • An open in the wire
P1	BLK	Under all conditions	Check for continuity to ground: There should be continuity.	• Poor ground (G502) • An open in the wire
D11	BLU	Under all conditions	Check for continuity between terminal D11 and relay control module connector K (10P) No. 7 terminal: There should be continuity.	• An open in the wire
		Relay control module connector K (10P) disconnected	Check for continuity to ground: There should be no continuity.	• Short to ground
G1	PNK	Under all conditions	Check for continuity between terminal G1 and power seat control unit connector A (20P) No. 14 terminal: There should be continuity	• An open in the wire
		Power seat control unit connector A (20P) disconnected	Check for continuity to ground: There should be no continuity.	• Short to ground
J4	BRN/BLK	Under all conditions	Check for continuity between terminal J4 and power window master switch connector A (22P) No. 5 terminal: There should be continuity.	• An open in the wire
		Power window master switch (Door multiplex control unit) connector (22P) disconnected	Check for continuity to ground: There should be no continuity.	• Short to ground

(cont'd)

Multiplex Integrated Control Unit Input Test (cont'd)

Cavity	Wire	Test condition	Test: Desired result	Possible cause if result is not obtained
N22	LT BLU	Under all conditions	Check for continuity between terminal N22 and center panel control unit connector A (14P) No. 14 terminal: There should be continuity.	• An open in the wire
		Display panel control unit connector A (14P) disconnected	Check for continuity to ground: There should be no continuity.	• Short to ground
N28	BRN/YEL	Under all conditions	Check for continuity between terminal N28 and gauge control module connector B (18P) No. 11 terminal: There should be continuity.	• An open in the wire
		Gauge control module connector B (18P) disconnected	Check for continuity to ground: There should be no continuity.	• Short to ground
X18	RED/WHT	Under all conditions	Check for continuity between terminal X18 and HandsFreeLink control unit connector (22P) No. 14 terminal: There should be continuity.	• An open in the wire
		HandsFreeLink control unit connector (22P) disconnected	Check for continuity to ground: There should be no continuity.	• Short to ground
X27	LT GRN	Under all conditions	Check for continuity between terminal X27 and wiper/washer connector (8P) No. 4 terminal: There should be continuity.	• An open in the wire
		Wiper/washer switch connector (8P) disconnected	Check for continuity to ground: There should be no continuity.	• Short to ground

Protected by AR

5. Reconnect the connectors to the under-dash fuse/relay box, and make sure these input tests at the appropriate connectors on the under-dash fuse/relay box.

   - If any test indicates a problem, find and correct the cause, then recheck the system.
   - If all the input tests prove OK, the multiplex integrated contorl unit must be faulty, replace the under-dash fuse/relay box assembly.

Cavity	Wire	Test condition	Test: Desired result	Possible cause if result is not obtained
P7	WHT/BLK	Under all conditions	Attach to ground: The ignition key light should come on.	• Blown No. 6 (7.5A) fuse in the under-dash fuse/relay box • Faulty LED • An open in the wire
K4	GRN/RED	Interior light switch in the middle position, all doors closed	Attach to ground: The individual map lights should come on.	• Blown No. 6 (7.5A) fuse in the under-dash fuse/relay box • Faulty map light • An open in the wire
D6 . X34	YEL	Ignition switch ON (II)	Check for voltage to ground: There should be battery voltage.	• Blown No. 21 (7.5A) fuse in the under-dash fuse/relay box • An open in the wire
K5 . X35	WHT/RED	Under all conditions	Check for voltage to ground: There should be battery voltage.	• Blown No. 7 (7.5A) fuse in the under-dash fuse/relay box • An open in the wire
F8	YEL/GRN	Ignition switch ON (II)	Check for voltage to ground: There should be battery voltage.	• Blown No. 20 (7.5A) fuse in the under-dash fuse/relay box • An open in the wire
X24	GRN/WHT	Under all conditions	Check for voltage to ground: There should be battery voltage.	• Blown No. 27 (30A) fuse in the under-dash fuse/relay box • An open in the wire

Protected by A.P.

Gauge Control Module Input Test

1. Remove the gauge control module (see page 22-265).
2. Disconnect the 18P connector from the gauge control module.
3. Inspect the connector and socket terminals to be sure they are all making good contact.
   - If the terminals are bent, loose or corroded, repair them as necessary, and recheck the system.
   - If the terminals look OK, go to step 4.

GAUGE CONTROL MODULE CONNECTOR B (18P)

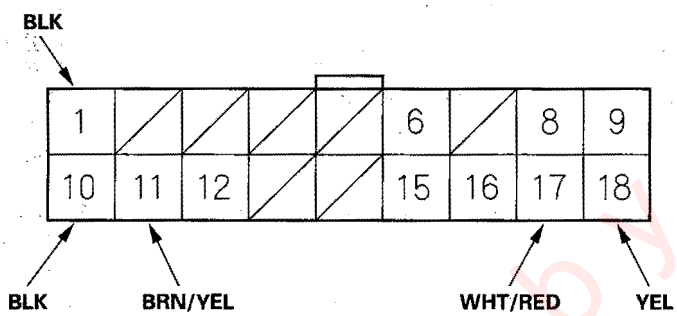

Wire side of female terminals

4. With the connector still disconnected, make these input tests at the connector.
   - If any test indicates a problem, find and correct the cause, then recheck the system.
   - If all the input tests prove OK, replace the gauge control module.

Cavity	Wire	Test Condition	Test: Desired result	Possible cause if result is not obtained
B17	WHT/RED	Under all conditions	Check for voltage to ground: There should be battery voltage.	• Blown No. 7 (7.5A) fuse in the under-dash fuse/relay box • An open in the wire
B18	YEL	Ignition switch ON (II)	Check for voltage to ground: There should be battery voltage.	• Blown No. 21 (7.5A) fuse in the under-dash fuse/relay box • An open in the wire
B1 B10	BLK	Under all conditions	Check for continuity to ground: There should be continuity.	• Poor ground (G501) • An open in the wire
B11	BRN/YEL	Under all conditions	Check for coninuity between the B11 terminal and under-dash fuse/relay box connector N (45P) No. 28 terminal: There should be continuity.	• An open in the wire

Protected by A R

Door Multiplex Control Unit Input Test

NOTE: Make sure the ignition switch is OFF before disconnecting the driver's door switch panel.

1. Remove the driver's door switch panel (see page 20-7).

2. Disconnect the connectors from the power window master switch.

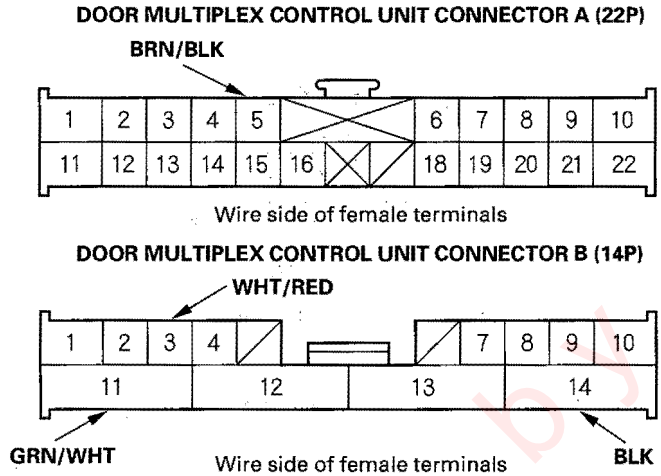

3. Inspect the connector and socket terminals to be sure they are all making good contact.

   - If the terminals are bent, loose or corroded, repair them as necessary, and recheck the system.
   - If the terminals look OK, go to step 4.

4. With the door multiplex control unit still disconnected, make these input tests at the connector.

   - If any test indicates a problem, find and correct the cause, then recheck the system.
   - If all the input tests prove OK, the door multiplex control unit must be faulty, replace the power window master switch.

Cavity	Wire	Test condition	Test: Desired result	Possible cause if result is not obtained
B3	WHT/RED	Under all conditions	Check for voltage to ground: There should be battery voltage.	• Blown No. 7 (7.5A) fuse in the under-dash fuse/relay box • An open in the wire
B11	GRN/WHT	Under all conditions	Check for voltage to ground: There should be battery voltage.	• Blown No. 27 (30A) fuse in the under-dash fuse/relay box • An open in the wire
B14	BLK	Under all conditions	Check for continuity to ground: There should be continuity.	• Poor ground (G501) • An open in the wire
A5	BRN/BLK	Under all conditions	Check for continuity between A5 terminal and the under-dash fuse/relay box connector J (21P) No. 4 terminal: There should be continuity.	• An open in the wire

Protected by A R

Combination Switch Control Unit Input Test

1. Remove the steering column covers (see page 17-24).

2. Disconnect the 8P connector from the wiper/washer switch.

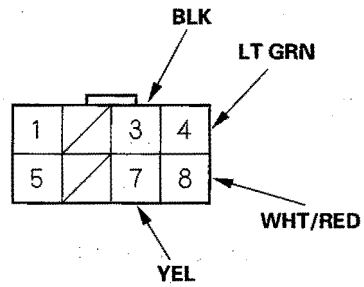

Wire side of female terminals

3. Inspect the connector and socket terminals to be sure they are all making good contact.

   - If the terminals are bent, loose or corroded, repair them as necessary, and recheck the system.
   - If the terminals look OK, go to step 4.

4. With the control unit still disconnected, make these input tests at the connector.

   - If any test indicates a problem, find and correct the cause, then recheck the system.
   - If all the input tests prove OK, the combination switch control unit must be faulty, replace the wiper/washer switch.

Cavity	Wire	Test condition	Test: Desired result	Possible cause if result is not obtained
3	BLK	Under all conditions	Check for continuity to ground: There should be continuity.	• Poor ground (G503, G601) • An open in the wire
8	WHT/RED	Under all conditions	Check for voltage to ground: There should be battery voltage.	• Blown No. 7 (7.5A) fuse in the under-dash fuse/relay box • An open in the wire
7	YEL	Ignition switch ON (II)	Check for voltage to ground: There should be battery voltage.	• Blown No. 21 (7.5A) fuse in the under-dash fuse/relay box • An open in the wire
4	LT GRN	Under all conditions	Check for continuity between No. 4 terminal and the under-dash fuse/relay box connector X (39P) No. 27 terminal: There should be continuity.	• An open in the wire

Protected by AR

Relay Control Module Input Test

1. Remove the under-hood fuse/relay box under cover.
2. Disconnect the under-hood fuse/relay box connector K (10P).

UNDER-HOOD FUSE/RELAY BOX CONNECTOR K (10P)

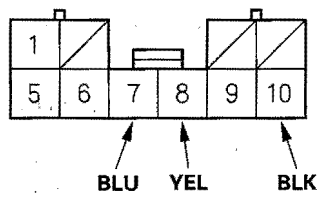

Wire side of female terminals

3. Inspect the connector and socket terminals to be sure they are all making good contact.
   - If the terminals are bent, loose or corroded, repair them as necessary, and recheck the system.
   - If the terminals look OK, go to step 4.
4. With the connector still disconnected, make these input tests at the connector.
   - If any test indicates a problem, find and correct the cause, then recheck the system.
   - If all the input tests prove OK, the relay control module must be faulty, replace the under-hood fuse/relay box.

Cavity	Wire	Test condition	Test: Desired result	Possible cause if result is not obtained
K10	BLK	Under all conditions	Check for continuity to ground: There should be continuity.	• Poor ground (G503, G601) • An open in the wire
K8	YEL	Ignition switch ON (II)	Check for voltage to ground: There should be battery voltage.	• Blown No. 21 (7.5A) fuse in the under-dash fuse/relay box • An open in the wire
K7	BLU	Under all conditions	Check for continuity between K7 terminal and the under-dash fuse/relay box connector D (17P) No. 11 terminal: There should be continuity.	• An open in the wire
		Under-dash fuse/relay box connector D (17P) disconnected	Check for continuity to ground: There should be no continuity.	• Short to ground

Protected by AR

Component Location Index

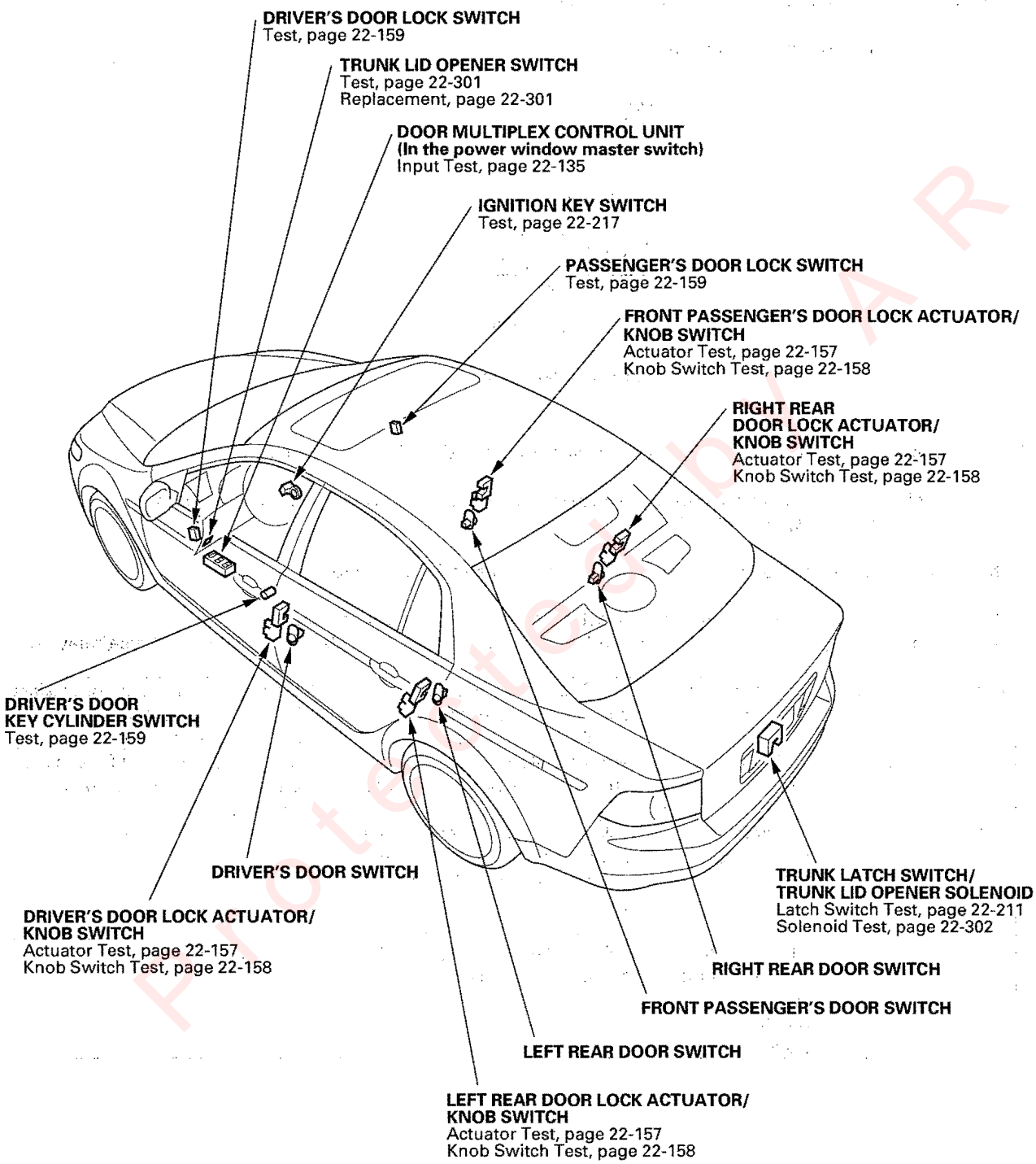

Protected by A R

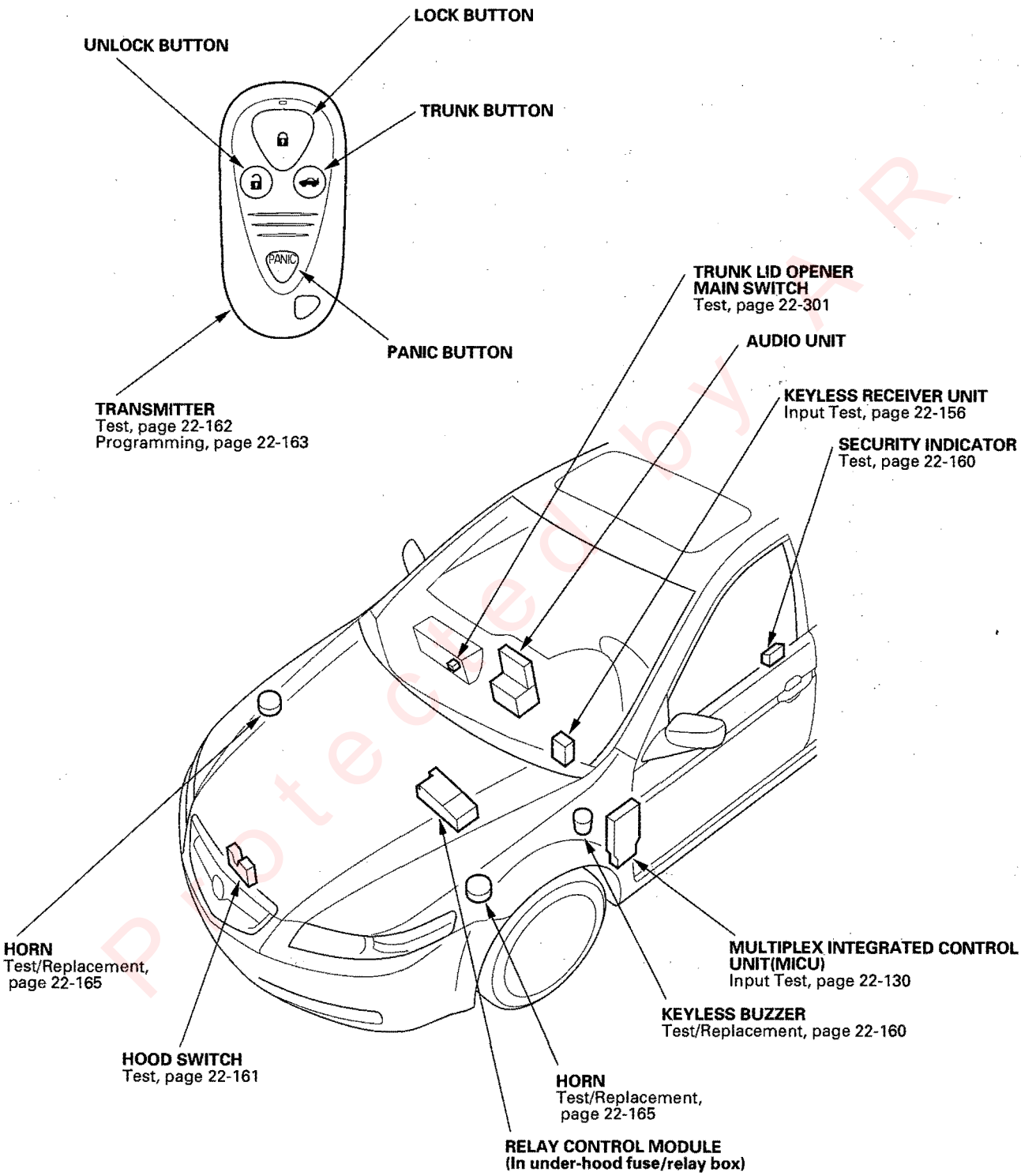

Protected by A R

System Description

Security Alarm System

The security alarm system is integrated with the MICS, and arms automatically after the doors, hood, and trunk are closed and locked. For the system to arm, the ignition switch must be off, the key must be removed, and the MICU must receive signals that the doors, hood, trunk are closed and locked. The alarm can be disarmed at any time by unlocking the driver's door with the key or pressing the UNLOCK button on the remote transmitter.

When everything is closed and locked, the only inputs that are grounded, and have 0 volts, are the driver's door lock knob switch (LOCK position), and the audio unit. In other words, all of the other switches are open, and have about 5 V or more volts, including the key cylinder switches. The security indicator at the driver's door begins to flash immediately after the doors, trunk, and hood are closed and locked, and shorty later, the security system arms and the security indicator flashes on for a shorter amount of time than before. If the security indicator does not flash, the system is not arming. If the vehicle is completely closed and locked, a beep sounds and parking lights flash to confirm the security alarm system is armed if the LOCK button is pressed a second time within 5 seconds, and the keyless lock acknowledgment is turned on.

If one of the switches is misadjusted or shorted internally (0 volts), or there is a short in the circuit (0 volts), the security system will not arm. A switch that is slightly misadjusted can cause the alarm to sound for no apparent reason. In this case, a significant change in outside air temperature, the vibration of a passing vehicle, or something bumping into the vehicle could cause the alarm to sound. There is no glass breakage or motion detector feature.

If anything is opened or improperly unlocked after the system is armed, the control unit receives a ground signal from that switch, the 10 volts reference drops to 0 volts, and the system sounds the alarm. If the audio unit is disconnected, the input loses its ground, and the input voltage goes to 10 volts, and the system sounds the alarm.
The system sounds the alarm when any of following occur while the security system is armed:

- A door or the trunk is forced open
- A door is unlocked without using the key or the remote transmitter
- The hood is opened
- The audio unit is disconnected
- The remote panic is operated
- The ignition switch is turned ON (II)

When the system sounds the alarm, the horns sound and the exterior lights flash for 2 minutes. The alarm can be stopped at any time by unlocking the driver's door with the key or by pressing any button on the remote transmitter.

Panic Mode

The panic mode sounds the alarm in order to attract attention. When the PANIC button on the remote transmitter is pressed and held for about 2 seconds, the alarm sounds and the exterior lights flash for about 20 seconds.

The panic mode can be cancelled at anytime by pressing any button on the remote transmitter or by turning the ignition switch ON (II). The panic mode will not function if the ignition switch is ON (II).

Protected by AIR

Keyless Entry System

The keyless entry system is integrated with the MICS. The multiplex integrated control unit (MICU) receives LOCK, UNLOCK and PANIC signals from the keyless receiver unit. The remote transmitters 1 and 2 (Identified on the back of the remote) are linked to the DPMS, the climate control settings, the custom memory settings (in the MID), and the illumination settings. Depending on which remote transmitter unlocks the vehicle, these settings are chosen.

Some functions of the security, keyless entry and power door locks can be customized using the MID keyless memory setting. They include:

- AUTO DOOR LOCK: Door locking can be turned off, or turned on when shifting from Park (A/T) or at a speed above 10 mph.
- AUTO DOOR UNLOCK: Door unlocking can be turned off, or turned on when shifting to Park (A/T) or turning the ignition switch OFF.
- WHENEVER UNLOCKING: Door unlocking can be set to unlock all doors or only the driver's door.
- KEYLESS DOOR LOCK ACKNOWLEDGEMENT: The beep can be turned on or off when pressing the LOCK button a second time on the remote transmitter.
- SECURITY RELOCK TIMER: Select the time (30, 60, or 90 sec.) that the doors relock if you unlock the doors with the remote transmitter, but do not open any of them.
- HEADLIGHT AUTO OFF TIMER: Select time (0, 15, 30, or 60 sec.) to turn the headlights off after removing the key from the ignition and closing the driver's door.
- INTERIOR LIGHT DIMMING TIMER: Select the dimming time (5, 15, or 30 sec.) of the interior lights after closing the door with the key removed from the ignition.

The remote transmitters can be linked and unlinked to the keyless memory settings by pressing the LOCK and UNLOCK buttons at the same time for about 1 second. The LED on the remote transmitter blinks once when linked, and twice when unlinked.

The keyless entry system allows you to lock and unlock the vehicle with the remote transmitter. When you press the LOCK button, all the doors lock (unless any one of the doors is not fully closed or the key is in the ignition switch). When you press the UNLOCK button first time, only the driver's door unlocks, if keyless memory setting "WHENEVER UNLOCKING" is set to Driver's Door. The other doors unlock when you press the UNLOCK button a second time. All the doors unlock when you press the UNLOCK button first time if keyless memory setting "WHENEVER UNLOCKING" is set to All Doors.

NOTE: The doors will not lock with the remote transmitter if a door is not fully closed, or if the key is in the ignition switch.

If the UNLOCK button is pressed, released, then pressed and held, the windows and the moonroof begin to open. The windows and the moonroof stop if the button is released. See power windows for more information and troubleshooting.

When the interior light switch is in the center position, it will come on when the UNLOCK button is pressed. If a door is not opened, the light will go off in about 30, 60, or 120 seconds (depending on the keyless memory setting "SECURITY RELOCK TIMER"), and the doors will relock. If the doors are locked with the remote transmitter within 30 seconds, the light will go off immediately.

Power Door Lock System

The power door lock system locks and unlocks all four doors with the driver's or passenger's master door lock switch. The doors can be locked and unlocked using the key in the driver's door key cylinder switch. If the key is turned counterclockwise, all the doors lock. If the key is turned clockwise once, the driver's door unlocks, and when the key is released, then turned again, the other doors unlock.
The doors can also be locked by pushing down on the lock knob on the driver's door. Pulling up on the lock knob only unlocks the driver's door. The lock knobs on the other doors only lock and unlock that door.
If the key is in the ignition, and a door is open, the doors will not lock using the master door lock switches and the door multiplex control unit will automatically unlock the doors if you push down on the driver's door lock knob.

Protected by AR

Keyless Entry/Security Alarm System

Circuit Diagram

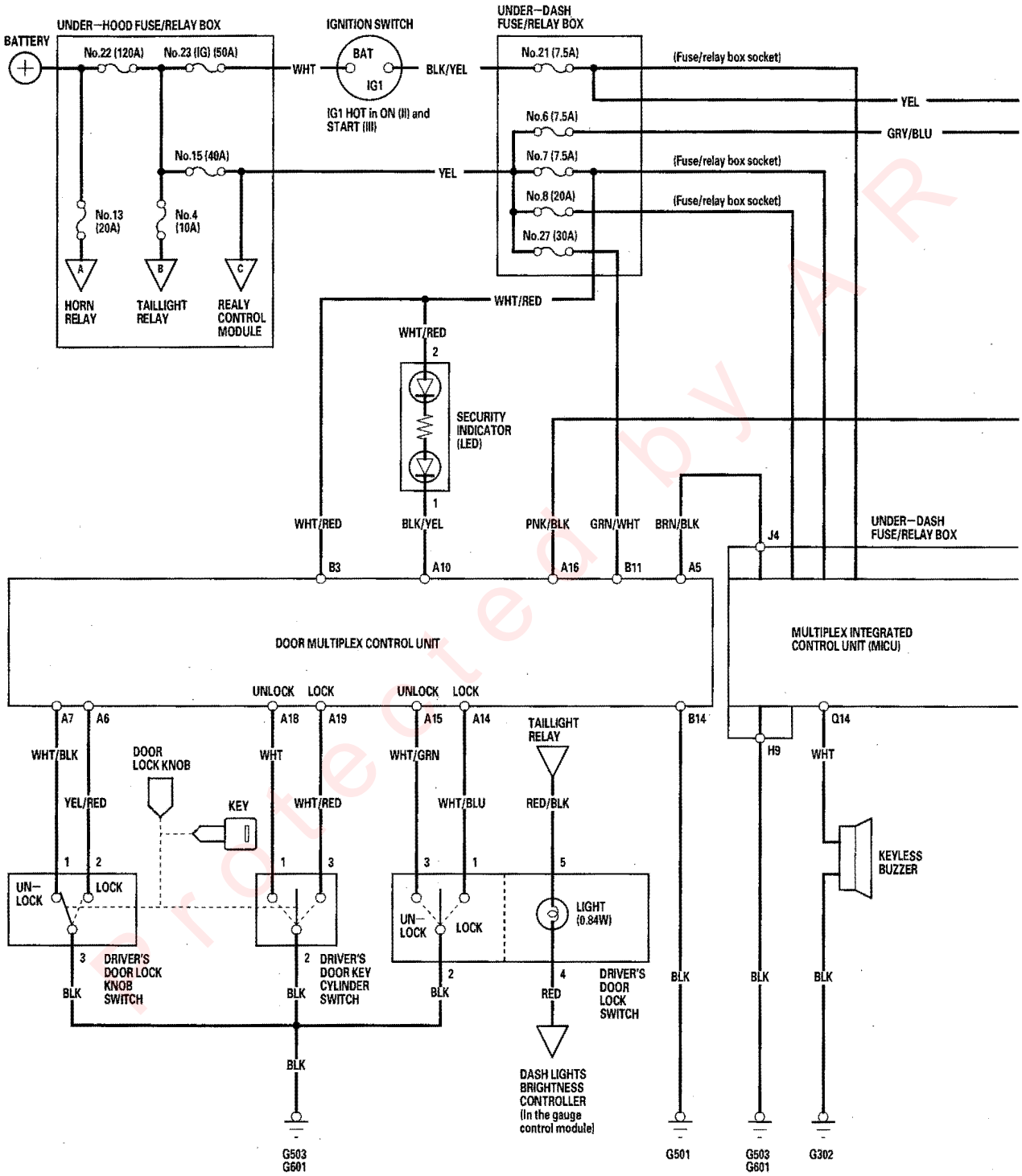

protected by AR

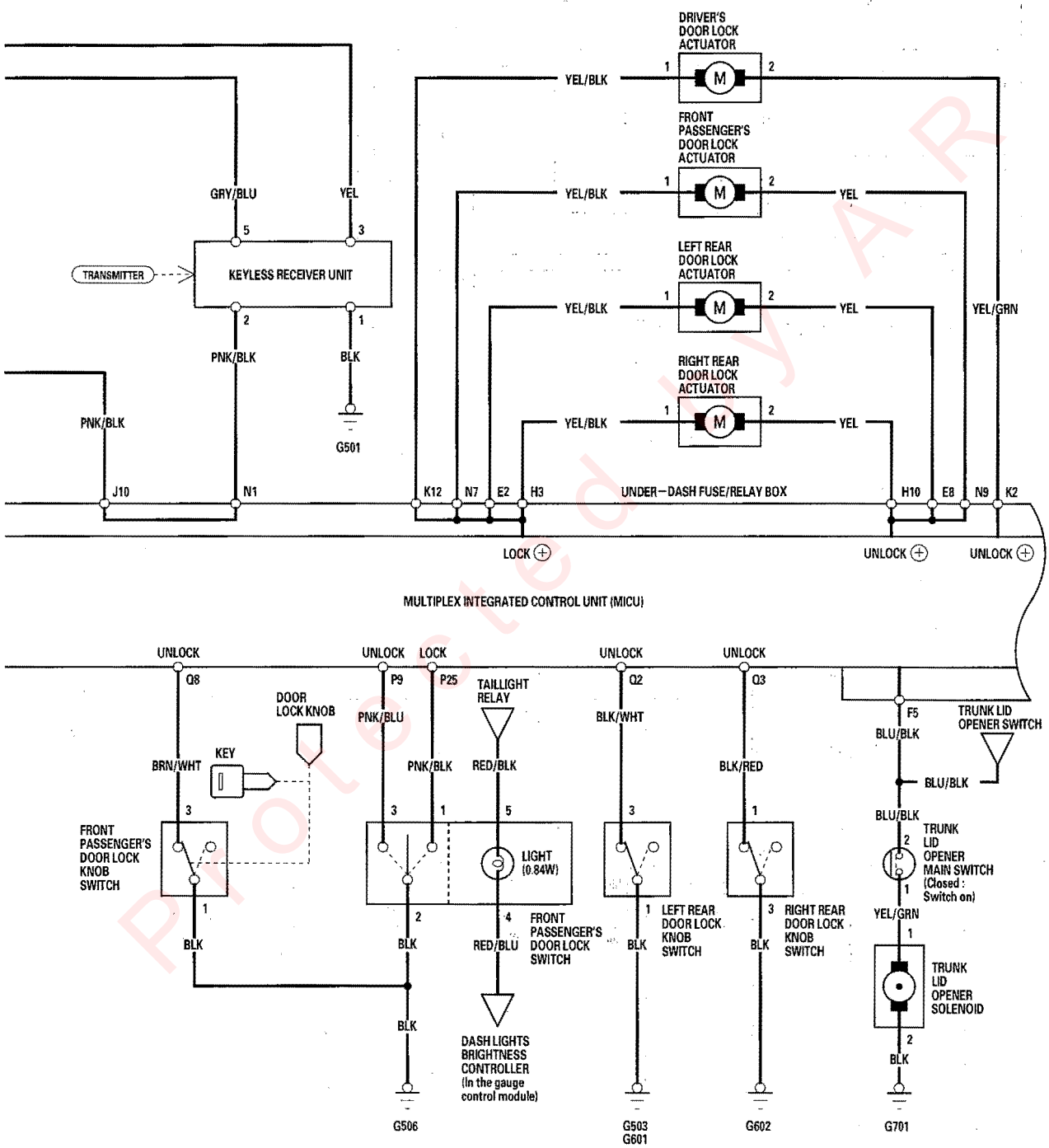

(cont'd)

Protected by AR

Circuit Diagram (cont'd)

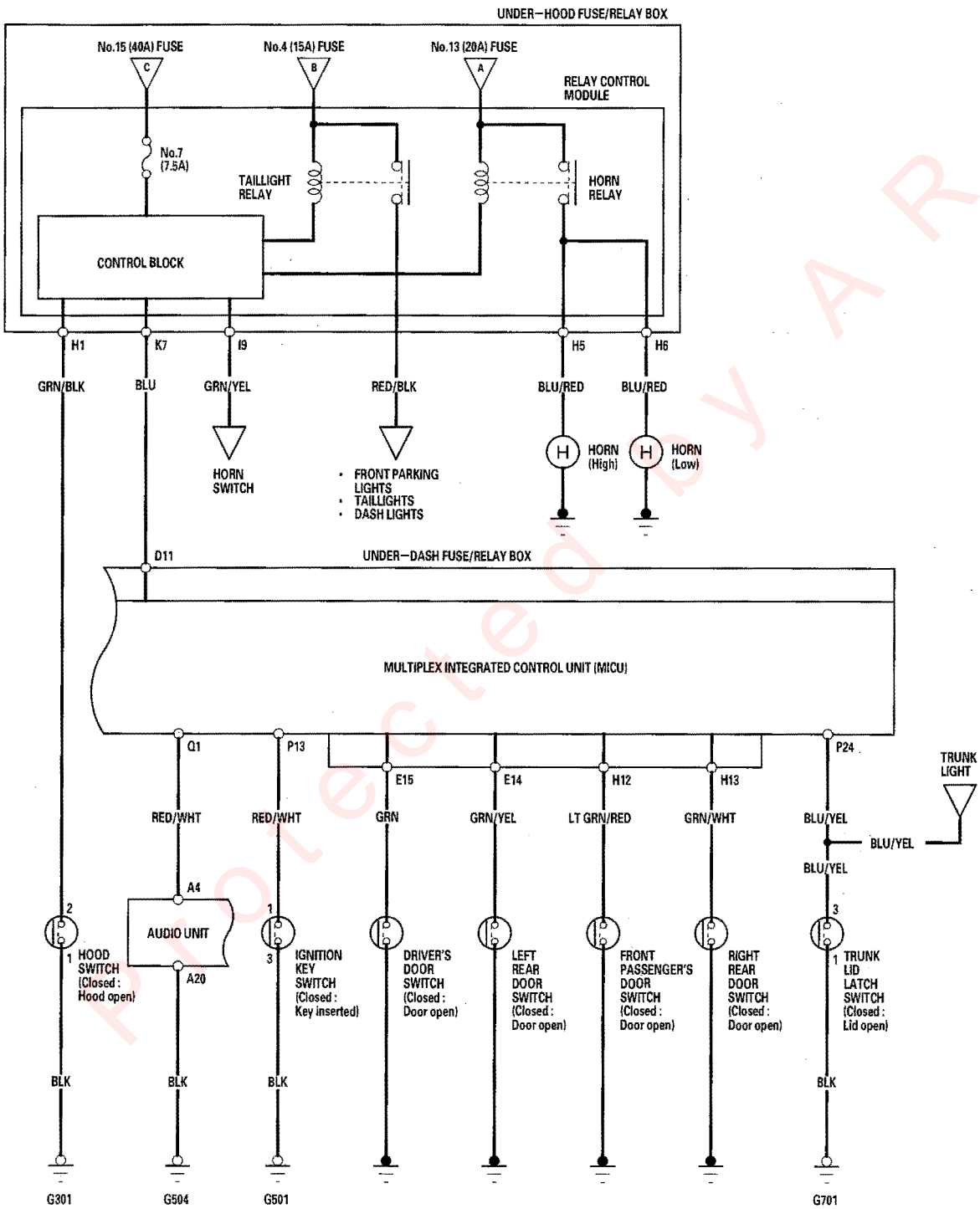

Protected by AR

DTC Troubleshooting

DTC B1026: Passenger's Door Lock Switch Signal Error

NOTE: If you are troubleshooting multiple DTCs, be sure to follow the instructions in B-CAN system diagnosis test mode A (see page 22-108).

1. Clear the DTCs with the HDS.
2. Turn the ignition switch OFF, and then back ON (II).
3. Operate the passenger's door lock switch several times.
4. Check for DTCs with the HDS.

   Is DTC B1026 indicated?

   YES—Go to step 5.

   NO—Intermittent failure. The passenger's door lock system is OK at this time. Check for shorted wires.■
5. With the passenger's door lock switch in the neutral position, select SECURITY from the HDS and enter the DATA LIST.
6. Check the ON/OFF information of the Front Passenger's Door Lock Sw. (LOCK) and Front Passenger's Door Lock Sw. (UNLOCK) in the DATA LIST.

   Are both information indicators OFF?

   YES—Go to step 7.

   NO—Go to step 11.
7. Push the passenger's door lock switch in LOCK and UNLOCK positions, and check the ON/OFF information of the Front Passenger's Door Lock Sw. (LOCK) and Front Passenger's Door Lock Sw. (UNLOCK) in the DATA LIST.

   Does the Front Passenger's Door Lock Sw. (LOCK) (Front Passenger's Door Lock Sw. (UNLOCK)) information indicate ON when the door lock switch is pushed in each switch position, and OFF when the door lock switch is released?

   YES—Faulty MICU, replace it.■

   NO—Go to step 8.
8. Turn the ignition switch OFF.
9. Disconnect the passenger's door lock switch 5P connector and under-dash fuse/relay box connector P (30P).
10. Check for continuity between the No. 1 terminal and No. 3 terminal of the passenger's door lock switch.

    Is there continuity?

    YES—Repair a short in the PNK/BLK (LOCK) and the PNK/BLU (UNLOCK) wires.■

    NO—Faulty passenger's door lock switch.■
11. Remove the passenger's door panel (see page 20-3).
12. Disconnect the 5P connector from the passenger's door lock switch.
13. Check the ON/OFF information of the Front Passenger's Door Lock Sw. (LOCK) and Front Passenger's Door Lock Sw. (UNLOCK) in the DATA LIST.

    Are both information indicators OFF?

    YES—Faulty passenger's door lock switch; replace it.■

    NO—Go to step 14.
14. Turn the ignition switch OFF.
15. Check for a short in the wire between the MICU and passenger's door lock switch using the keyless entry/security alarm control unit input test (see page 22-150).

    Are the wire harnesses OK?

    YES—Faulty MICU; replace it.■

    NO—A short in the wire, repair and recheck.■

Protected by FR

DTC Troubleshooting (cont'd)

DTC B1127: Driver's Door Key Cylinder Switch Signal Error

NOTE: If you are troubleshooting multiple DTCs, be sure to follow the instructions in B-CAN system diagnosis test mode A (see page 22-108).

1. Clear the DTCs with the HDS.
2. Turn the ignition switch OFF, and then back ON (II).
3. Operate the driver's door key cylinder several times.
4. Check for DTCs with the HDS.

   Is DTC B1127 indicated?

   YES—Go to step 5.

   NO—Intermittent failure. The driver's door key cylinder system is OK at this time. Check for shorted wires.■
5. With the driver's door key cylinder in the neutral position, select SECURITY from the BODY ELECTRICAL SYSTEM SELECT MENU, and enter the DATA LIST.
6. Check the ON/OFF information of the Driver's Door Key Cylinder Switch (LOCK) and Driver's Door Key Cylinder Switch (UNLOCK) in the DATA LIST.

   Are both information indicators OFF?

   YES—Go to step 7.

   NO—Go to step 11.
7. Turn the driver's door key cylinder to the LOCK and UNLOCK positions with the ignition key and check the ON/OFF information of the Driver's Door Key Cylinder Switch (LOCK) and Driver's Door Key Cylinder Switch (UNLOCK) in the DATA LIST.

   Is the Driver's Door Key Cylinder Switch (LOCK) (Driver's Door Key Cylinder Switch (UNLOCK)) information indicator ON when the key cylinder is in the LOCK (UNLOCK) position, and OFF when the key is returned to the neutral position?

   YES—Faulty door multiplex control unit; replace the power window master switch.■

   NO—Go to step 8.
8. Turn the ignition switch OFF.
9. Disconnect the driver's door key cylinder switch 3P connector, and the power window master switch connector A (22P).
10. Check for continuity between the No. 3 (LOCK) terminal and the No. 1 (UNLOCK) terminal of the driver's door key cylinder switch 3P connector.

DRIVER'S DOOR KEY CYLINDER SWITCH 3P CONNECTOR

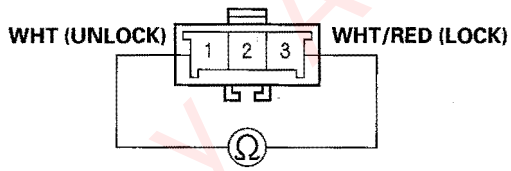

Terminal side of male terminals

Is there continuity?

YES—Repair an open in the WHT/RED (LOCK) or WHT (UNLOCK) wire.■

NO—Faulty driver's door key cylinder switch.■

11. Disconnect the driver's door key cylinder switch 3P connector.
12. Check the ON/OFF information of the Driver's Door Key Cylinder Switch (LOCK) and Driver's Door Key Cylinder Switch (UNLOCK) in the DATA LIST.

    Are both information indicators OFF?

    YES—Faulty driver's door key cylinder switch.■

    NO—Go to step 13.

Protected by AR

13. Turn the ignition switch OFF.
14. Disconnect the driver's door key cylinder switch 3P connector.
15. Check for continuity between the No. 3 (LOCK) and No. 1 (UNLOCK) terminals of the driver's door key cylinder switch 3P connector and body ground.

DRIVER'S DOOR KEY CYLINDER SWITCH 3P CONNECTOR

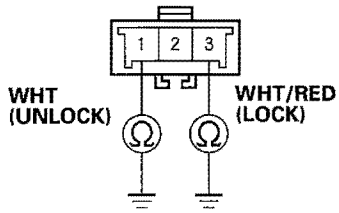

Terminal side of male terminals

Is there continuity?

YES—Repair a short in the WHT/RED (LOCK) or WHT (UNLOCK) wire.■

NO—Faulty door multiplex control unit; replace the power window master switch.■

DTC B1128: Driver's Door Lock Switch Signal Error

NOTE: If you are troubleshooting multiple DTCs, be sure to follow the instructions in B-CAN system diagnosis test mode A (see page 22-108).

1. Clear the DTCs with the HDS.
2. Turn the ignition switch OFF, and then back ON (II).
3. Operate the driver's door look switch several times.
4. Check for DTCs with the HDS.

   Is DTC B1128 indicated?

   YES—Go to step 5.
   NO—Intermittent failure. The driver's door lock switch system is OK at this time. Check for shorted wires.■
5. With the driver's door lock switch in the neutral position, select SECURITY from the BODY ELECTRICAL SYSTEM SELECT MENU, and enter the DATA LIST.
6. Check the ON/OFF information of the Driver's Door Lock Switch (LOCK) and Driver's Door Lock Switch (UNLOCK) in the DATA LIST.

   Are both information indicators OFF?

   YES—Go to step 7.
   NO—Check the door lock switch. If the driver's door lock switch is OK, faulty door multiplex control unit; replace the power window master switch.■
7. Push the driver's door lock switch in LOCK and UNLOCK positions, and check the ON/OFF information of the Driver's Door Lock Switch (LOCK) and Driver's Door Lock Switch (UNLOCK) in the DATA LIST.

   Does the Driver's Door Lock Switch (LOCK) (Driver's Door Lock Switch (UNLOCK)) information indicate ON when the door lock switch is pushed in the LOCK (UNLOCK) position, and OFF when the door lock switch is released?

   YES—Faulty door multiplex control unit; replace the power window master switch.■
   NO—Go to step 8.

(cont'd)

Protected by AR

DTC Troubleshooting (cont'd)

8. Turn the ignition switch OFF.
9. Disconnect the driver's door lock switch 5P connector and power window master switch connector A (22P).
10. Check for continuity between the No. 1 terminal and the No. 3 terminal of the driver's door lock switch 5P connector.

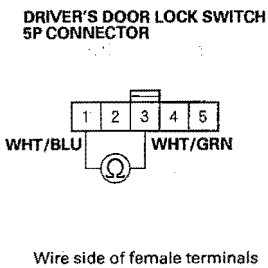

Is there continuity?

YES—Repair short in the WHT/BLU (LOCK) and WHT/GRN (UNLOCK) wires. ■

NO—Faulty driver's door lock switch. ■

11. Remove the driver's door panel (see page 20-7).
12. Disconnect the 5P connector from the driver's door lock switch.
13. Check the ON/OFF information of the Driver's Door Lock Switch (LOCK) and Driver's Door Lock Switch (UNLOCK) in the DATA LIST.

Are both information indicators OFF?

YES—Faulty driver's door lock switch; replace it. ■

NO—Go to step 14.

14. Turn the ignition switch OFF.
15. Check for a short in the wire between the MICU and driver's door lock switch using the keyless entry/ security alarm control unit input test (see page 22-150).

Are the wire harnesses OK?

YES—Faulty MICU; replace it. ■

NO—A short in the wire, repair and recheck. ■

DTC B1129: Driver's Door Lock Knob Switch Signal Error

NOTE: If you are troubleshooting multiple DTCs, be sure to follow the instructions in B-CAN system diagnosis test mode A (see page 22-108).

1. Clear the DTCs with the HDS.
2. Turn the ignition switch OFF, and then back ON (II).
3. Operate the driver's door lock knob switch several times.
4. Check for DTCs with the HDS.

Is DTC B1129 indicated?

YES—Go to step 5.

NO—Intermittent failure. The driver's door lock knob switch system is OK at this time. Check pinfits and connections. ■

5. Select SECURITY from the BODY ELECTRICAL SYSTEM SELECT MENU, and enter the DATA LIST.

Check the ON/OFF information of the Driver's Door Lock knob Switch (LOCK) and Driver's Door Lock Knob Switch (UNLOCK) in the DATA LIST.

Does the Driver's Door Lock Knob Switch (LOCK) information indicator ON and Driver's Door Lock Knob Switch (UNLOCK) information indicate OFF with the driver's door lock knob switch in LOCK position, and does the Driver's Door Lock Knob Switch (LOCK) information indicate OFF and Driver's Door Lock Knob Switch (UNLOCK) information indicate ON with the driver's door lock knob switch in the UNLOCK position?

YES—Faulty door multiplex control unit; replace the power window master switch. ■

NO—Go to step 6.

6. Disconnect the driver's door lock knob switch 3P connector.

Protected by AR

7. Check the ON/OFF information of the Driver's Door Lock Knob Switch (LOCK) and Driver's Door Lock Knob Switch (UNLOCK) in the DATA LIST.

   Are both information indicators OFF?

   YES—Check for an open in the driver's door lock knob switch (LOCK) wire or the driver's door lock knob switch (UNLOCK) wire between the door multiplex control unit and the driver's door lock knob switch. If OK, replace the driver's door lock actuator. ■

   NO—Go to step 8.

8. Turn the ignition switch OFF.

9. Disconnect power window master switch connector A (22P).

10. Check for continuity between the No. 2 (LOCK) and No. 1 (UNLOCK) terminals of the driver's door lock knob switch 3P connector and body ground.

DRIVER'S DOOR LOCK KNOB SWITCH 3P CONNECTOR

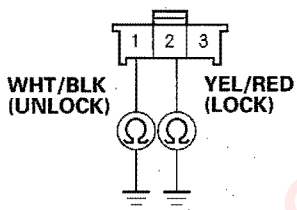

Wire side of female terminals

Is there continuity?

YES—Repair a short in the YEL/RED (LOCK) or WHT/BLK (UNLOCK) wire. ■

NO—Go to driver's door lock knob switch test (see page 22-158). If the driver's door lock knob switch is OK, the door multiplex control unit is faulty; replace the power window master switch. ■

DTC B1144: Abnormal Signal from Keyless Transmitter

NOTE: If you are troubleshooting multiple DTCs, be sure to follow the instructions in B-CAN system diagnosis test mode A (see page 22-108).

1. Clear the DTCs with the HDS.

2. Turn the ignition switch OFF and remove the ignition key from the key cylinder.

3. Using the keyless transmitter, press the LOCK/UNLOCK, TRUNK and PANIC buttons several times.

4. Turn the ignition switch ON (II).

5. Check for DTCs with the HDS.

   Is DTC B1144 indicated?

   YES—Go to step 6.

   NO—The system is OK at this time. ■

6. Do the keyless receiver unit input test (see page 22-156).

   Is the input test OK?

   YES—Substitute a known-good keyless receiver unit, and recheck. If DTC is gone, the original keyless receiver unit is faulty; replace it. If the DTC B1144 is still indicated, replace the door multiplex control unit. ■

   NO—Refer to the keyless receiver unit input test and correct the cause. ■

Protected by AP

Control Unit Input Test

NOTE: Before testing the keyless entry/security control system, troubleshoot the multiplex integrated control system (see page 22-108).

Multiplex Integrated Control Unit

1. Turn the ignition switch OFF.
2. Remove the left kick panel (see page 20-62).
3. Disconnect the under-dash fuse/relay box connectors.

   NOTE: All connectors are wire side of female terminals.

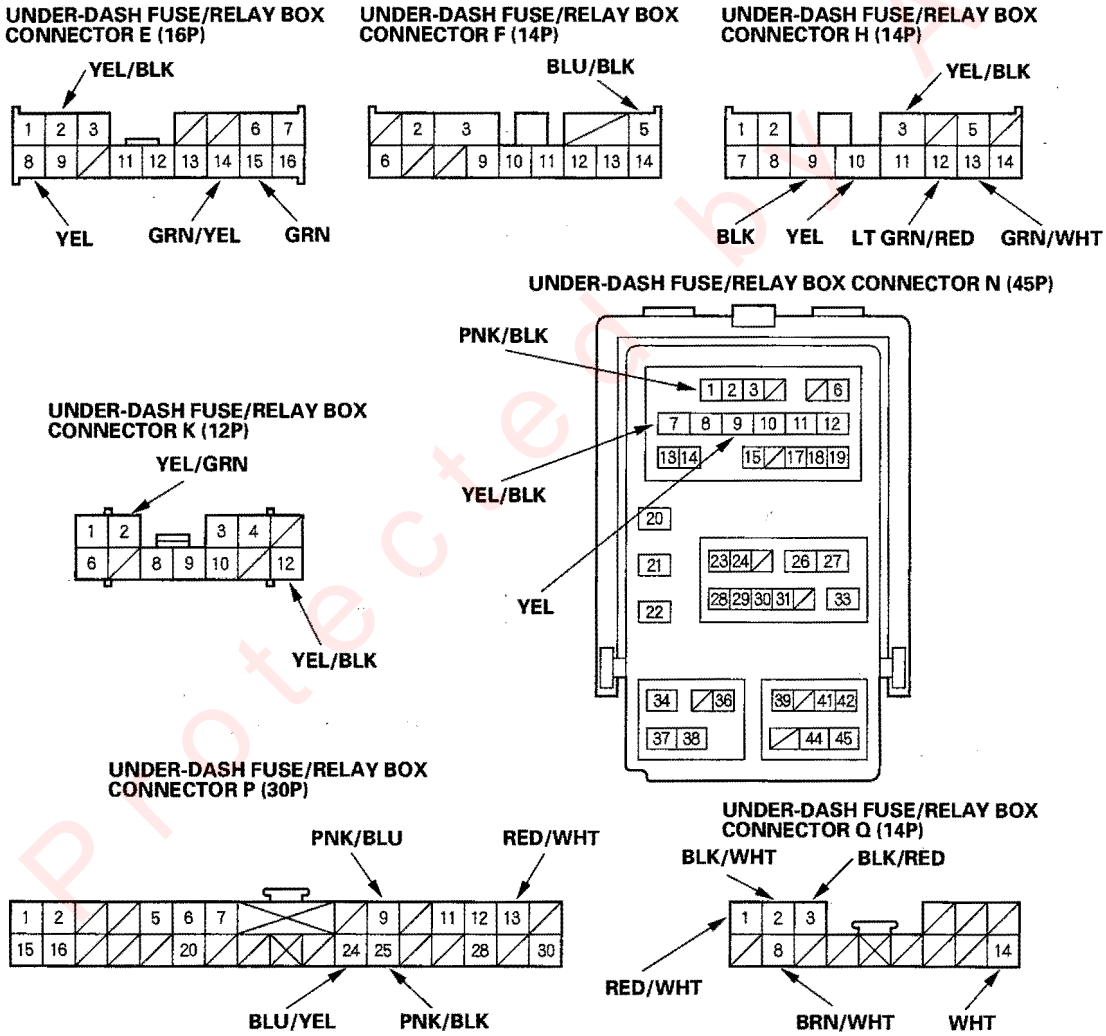

4. Inspect the connector and socket terminals to be sure they are all making good contact.

   - If the terminals are bent, loose or corroded, repair them as necessary, and recheck the system.
   - If the terminals look OK, go to step 5.

Protected by AR

5. With the connectors still disconnected, make these input tests at the connectors.

   - If any test indicates a problem, find and correct the cause, then recheck the system.
   - If the input tests prove OK, go to step 6.

Cavity	Wire	Test condition	Test: Desired result	Possible cause if result is not obtained
H9	BLK	Under all conditions	Check for continuity to ground: There should be continuity.	• Poor ground (G503, G601) • An open in the wire
F5	BLU/BLK	Connect the F5 terminal to the battery positive terminal. Trunk lid opener main switch ON.	Check trunk lid opener solenoid operation: Trunk lid should open.	• Poor ground (G701) • Faulty trunk lid opener solenoid • An open in the wire
K2 K12	YEL/GRN YEL/BLK	Connect the battery positive terminal to K12 (K2) terminal, and K2 (K12) terminal to H9 terminal.	Check actuator operation: The driver's door lock actuator should lock (unlock).	• Faulty driver's door lock actuator • An open in the wire
N7 N9	YEL/BLK YEL	Connect the battery positive terminal to N7 (N9) terminal, and N9 (N7) terminal to H9 terminal.	Check actuator operation: The front passenger's door lock actuator should lock (unlock).	• Faulty front passenger's door lock actuator • An open in the wire
E2 E8	YEL/BLK YEL	Connect the battery positive terminal to E2 (E8) terminal, and E8 (E2) terminal to H9 terminal.	Check actuator operation: The left rear door lock actuator should lock (unlock).	• Faulty left rear door lock actuator • An open in the wire
H3 H10	YEL/BLK YEL	Connect the battery positive terminal to H3 (H10) terminal, and H10 (H3) terminal to H9 terminal.	Check actuator operation: The right rear door lock actuator should lock (unlock).	• Faulty right rear door lock actuator • An open in the wire
Q14	WHT	Under all conditions	Apply battery power to Q14 terminal momentarily. The buzzer should chirp.	• Poor ground (G302) • Faulty buzzer • An open in the wire

Protected by AR

(cont'd)

Control Unit Input Test (cont'd)

6. Reconnect all connectors to the under-dash fuse/relay box. Turn the ignition switch ON (II), and make these input tests at the appropriate connectors on the under-dash fuse/relay box.

   - If any test indicates a problem, find and correct the cause, then recheck the system.
   - If all the input tests prove OK, go to step 7.

Cavity	Wire	Test condition	Test: Desired result	Possible cause if result is not obtained
Q8	BRN/WHT	Front passenger's door lock knob switch unlocked	Check for voltage to ground: There should be 1 V or less	• Poor ground (G506) • Faulty front passenger's door lock knob switch • An open in the wire
		Front passenger's door lock knob switch locked	Check for voltage to ground: There should be 5 V or more.	• Faulty front passenger's door lock knob switch • Short to ground
P9	PNK/BLU	Front passenger's door lock switch unlocked	Check for voltage to ground: There should be 1 V or less.	• Poor ground (G506) • Faulty front passenger's door lock switch • An open in the wire
		Front passenger's door lock switch in neutral	Check for voltage to ground: There should be 5 V or more.	• Faulty front passenger's door lock switch • Short to ground
P25	PNK/BLK	Front passenger's door lock switch locked	Check for voltage to ground: There should be 1 V or less.	• Poor ground (G506) • Faulty front passenger's door lock switch • An open in the wire
		Front passenger's door lock switch in neutral	Check for voltage to ground: There should be 5 V or more.	• Faulty front passenger's door lock switch • Short to ground
Q2	BLK/WHT	Left rear door lock knob switch unlocked	Check for voltage to ground: There should be 1 V or less.	• Poor ground (G503, G601) • Faulty left rear door lock knob switch • An open in the wire
		Left rear door lock knob switch locked	Check for voltage to ground: There should be 5 V or more.	• Faulty left rear door lock knob switch • Short to ground
Q3	BLK/RED	Right rear door lock knob switch unlocked	Check for voltage to ground: There should be 1 V or less.	• Poor ground (G602) • Faulty right rear door lock knob switch • An open in the wire
		Right rear door lock knob switch locked	Check for voltage to ground: There should be 5 V or more.	• Faulty right rear door lock knob switch • Short to ground

Protected by

Cavity	Wire	Test condition	Test: Desired result	Possible cause if result is not obtained
Q1	RED/WHT	Under all conditions	Check for voltage to ground: There should be 1 V or less.	• Poor ground (G504) • Faulty connections at the audio unit • Faulty audio unit • An open in the wire
P13	RED/WHT	Ignition key inserted into the ignition switch.	Check for voltage to ground: There should be 1 V or less.	• Poor ground (G501) • Faulty ignition key switch • An open in the wire
		Ignition switch OFF and ignition key removed from the ignition switch.*1	Check for voltage to ground: There should be 5 V or more.	• Faulty ignition key switch • Short to ground
E15	GRN	Driver's door open	Check for voltage to ground: There should be 1 V or less.	• Faulty driver's door switch • An open in the wire
		Driver's door closed	Check for voltage to ground: There should be 5 V or more.	• Faulty driver's door switch • Short to ground
H12	LT GRN/ RED	Front passenger's door open	Check for voltage to ground: There should be 1 V or less.	• Faulty front passenger's door switch • An open in the wire
		Front passenger's door closed	Check for voltage to ground: There should be 5 V or more.	• Faulty front passenger's door switch • Short to ground
E14	GRN/YEL	Left rear door open	Check for voltage to ground: There should be 1 V or less.	• Faulty left rear door switch • An open in the wire
		Left rear door closed	Check for voltage to ground: There should be 5 V or more.	• Faulty left rear door switch • Short to ground
H13	GRN/WHT	Right rear door open	Check for voltage to ground: There should be 1 V or less.	• Faulty right rear door switch • An open in the wire
		Right rear door closed	Check for voltage to ground: There should be 5 V or more.	• Faulty right rear door switch • Short to ground
P24	BLU/YEL	Trunk lid open	Check for voltage to ground: There should be 1 V or less.	• Poor ground (G701) • Faulty trunk latch switch • An open in the wire
		Trunk lid closed	Check for voltage to ground: There should be 5 V or more.	• Faulty trunk latch switch • Short to ground

* : Insert the key into the ignition switch and turn the ignition switch ON (II) before continuiting to the next step.

Protected by A

(cont'd)

Control Unit Input Test (cont'd)

Door Multiplex Control Unit

7. Turn the ignition switch OFF.
8. Remove the power window master switch (see page 22-239).
9. Disconnect the 22P connector from the power window master switch.

DOOR MULTIPLEX CONTROL UNIT CONNECTOR A (22P)

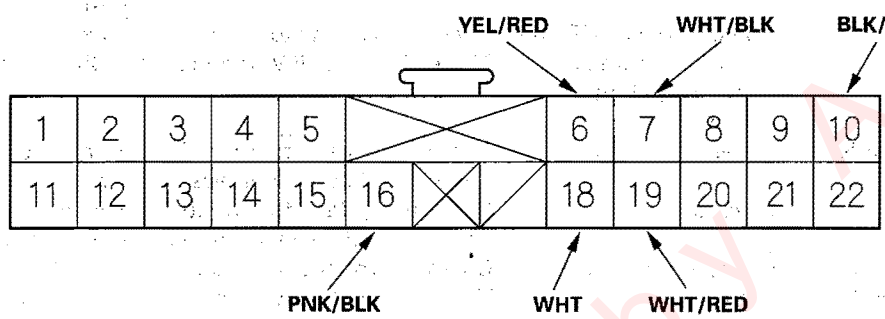

Wire side of female terminals

10. Inspect the connector and socket terminals to be sure they are all making good contact.
    - If the terminals are bent, loose or corroded, repair them as nesessary, and receck the system.
    - If the terminals look OK, go to step 11.
11. With the connector still disconnected, make these input tests at the connector.
    - If the test indicates a problem, find and correct the cause, then recheck the system.
    - If the input tests prove OK, go to step 12.

Cavity	Wire	Test conditions	Test: Desired result	Possible cause if result is not obtained
A10	BLK/YEL	Under all conditions	Attach to ground: The security indicator should come on.	• Faulty security inndicator • An open in the wire
A16	PNK/BLK	Under all conditions	Check for continuity between the A16 terminal and under-dash fuse/relay box connector J terminal No. 10. There should be continuity.	• An open in the wire

Protected by AR

12. Reconnect the connector to the door multiplex control unit. Turn the ignition switch ON (II) and make these input tests at the connectors.

- If any test indicates a problem, find and correct the cause, then recheck the system.
- If all the input tests prove OK, go to step 12.

Cavity	Wire	Test condition	Test: Desired result	Possible cause if result is not obtained
A7	WHT/BLK	Driver's door lock knob switch unlocked	Check for voltage to ground: There should be 1 V or less.	• Poor ground (G503, G601) • Faulty driver's door lock knob switch • An open in the wire
		Driver's door lock knob switch locked	Check for voltage to ground: There should be 5 V or more.	• Faulty driver's door lock knob switch • Short to ground
A6	YEL/RED	Driver's door lock knob switch locked	Check for voltage to ground: There should be 1 V or less.	• Poor ground (G503, G601) • Faulty driver's door lock knob switch • An open in the wire
		Driver's door lock knob switch unlocked	Check for voltage to ground: There should be 5 V or more.	• Faulty driver's door lock knob switch • Short to ground
A14	WHT/BLU	Driver's door lock switch pressed (LOCK)	Check for voltage to ground: There should be 1 V or less.	• Poor ground (G503, G601) • Faulty driver's door lock switch • An open in the wire
		Driver's door lock switch in neutral or pressed (UNLOCK)	Check for voltage to ground: There should be 5 V or more.	• Faulty driver's door lock switch • Short in the wire
A15	WHT/GRN	Driver's door lock switch pressed (UNLOCK)	Check for voltage to ground: There should be 1 V or less.	• Poor ground (G503, G601) • Faulty driver's door lock switch • An open in the wire
		Driver's door lock switch in neutral or pressed (LOCK)	Check for voltage to ground: There should be 5 V or more.	• Faulty driver's door lock switch • Short in the wire
A18	WHT	Driver's door key cylinder switch in UNLOCK	Check for voltage to ground: There should be 1 V or less.	• Faulty driver's door key cylinder switch • Poor ground (G503, G601) • An open in the wire • Short to ground
		Driver's door key cylinder switch in neutral	Check for voltage to ground: There should be 5 V or more.	
		Driver's door key cylinder switch in LOCK	Check for voltage to ground: There should be 5 V or more.	
A19	WHT/RED	Driver's door key cylinder switch in LOCK	Check for voltage to ground: There should be 1 V or less.	• Faulty driver's door key cylinder switch • Poor ground (G503, G601) • An open in the wire • Short to ground
		Driver's door key cylinder switch in neutral	Check for voltage to ground: There should be 5 V or more.	
		Driver's door key cylinder switch in UNLOCK	Check for voltage to ground: There should be 5 V or more.	

13. If all the input tests prove OK, and no DTCs were found during MICS troubleshooting (B-CAN System Diagnosis Test Mode A), go to the B-CAN system input and output index (see page 22-95). If multiple failures are found on more than one control unit, replace the under-dash fuse/relay box (includes the MICU). If input failures are related to a particular control unit, replace that control unit.

Protected

Keyless Receiver Unit Input Test

1. Remove the dashboard lower cover (see page 20-82).
2. Disconnect the 5P connector (A) from the keyless receiver unit (B).

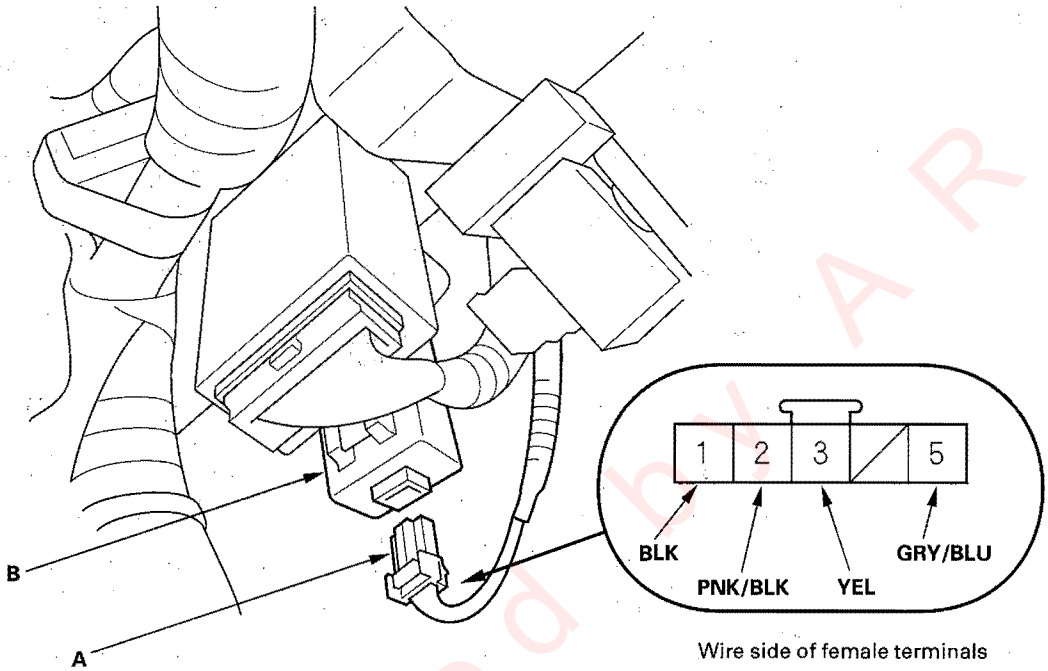

Wire side of female terminals

3. Inspect the connector and socket terminals to be sure they are all making good contact.
   - If the terminals are bent, loose or corroded, repair them as necessary, and recheck the system.
   - If the terminals are OK, go to step 4.
4. With the connector still disconnected, make these input tests at the connector.
   - If any test indicates a problem, find and correct the cause, then recheck the system.
   - If all the input tests prove OK, replace the keyless receiver unit.

Cavity	Wire	Test condition	Test: Desired result	Possible cause if result is not obtained
1	BLK	Under all conditions	Check for continuity to ground: There should be continuity.	• Poor ground (G501) • An open in the wire
3	YEL	Ignition switch ON (II)	Check for voltage to ground: There should be battery voltage.	• Blown No. 21 (7.5A) fuse in the under-dash fuse/relay box • An open in the wire
5	GRY/BLU	Under all conditions	Check for voltage to ground: There should be battery voltage.	• Blown No. 6 (7.5A) fuse in the under-dash fuse/relay box • An open in the wire
2	PNK/BLK	Under-dash fuse/ relay box connector N (45P) disconnected	Check for continuity between the No. 2 terminal and the under-dash fuse/relay box connector N No. 1 terminal. There should be continuity.	An open in the wire
			Check for continuity between No. 2 terminal and body ground: There should be no continuity.	A short in the wire

Protected by AR

Door Lock Actuator Test

Driver's door

1. Remove the driver's door panel (see page 20-7).
2. Disconnect the 2P connector from the actuator.

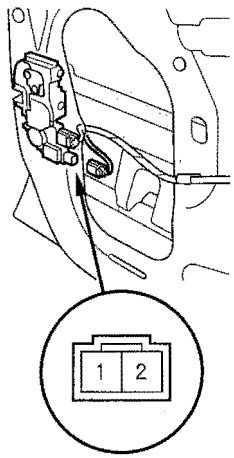

3. Check actuator operation by connecting power and ground according to the table. To prevent damage to the actuator, apply battery voltage only momentarily.

Terminal / Position	1	2
LOCK	⊕	⊖
UNLOCK	⊖	⊕

4. If the actuator does not operate as specified, replace it.

Passenger's door

1. Remove the passenger's door panel (see page 20-7).
2. Disconnect the 2P connector from the actuator.

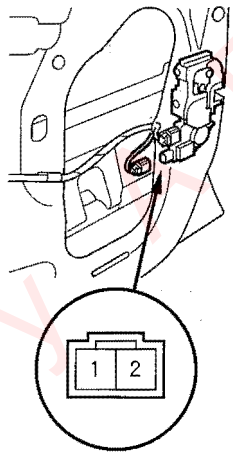

NOTE: The illustration shows front passenger's door.

3. Check actuator operation by connecting power and ground according to the table. To prevent damage to the actuator, apply battery voltage only momentarily.

Terminal / Position	1	2
LOCK	⊕	⊖
UNLOCK	⊖	⊕

4. If the actuator does not operate as specified, replace it.

Protected by ER

Door Lock Knob Switch Test

Driver's Door

1. Remove the driver's door panel (see page 20-7).
2. Disconnect the 3P connector from the actuator.

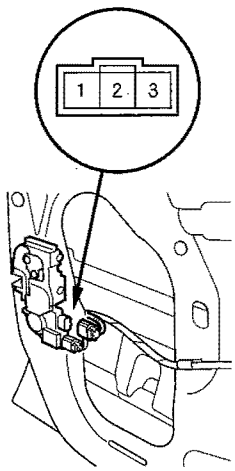

3. Check for continuity between the terminals.
   - There should be continuity between the No. 2 and No. 3 terminals when the door lock knob switch is in the LOCK position and no continuity when the switch is in the UNLOCK position.
   - There should be continuity between the No. 1 and No. 3 terminals when the door lock knob switch is in the UNLOCK position and no continuity when the switch is in the LOCK position.
4. If the continuity is not as specified, replace the door lock actuator.

Passenger's Door

1. Remove the passenger's door panel (see page 20-7).
2. Disconnect the 3P connector from the actuator.

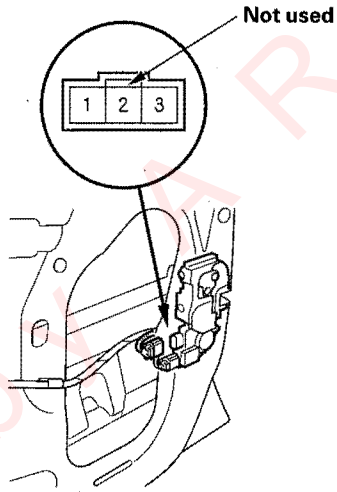

NOTE: The illustration shows front passenger's door.

3. Check for continuity between the terminals. There should be continuity between the No. 1 and No. 3 terminals when the door lock knob switch in the UNLOCK position and no continuity when the switch is in the LOCK position.
4. If the continuity is not specified, replace the door lock actuator.

Protected by AR

Door Lock Switch Test

1. Remove the door panel (see page 20-7).
2. Remove the two screws, then remove the door lock switch.

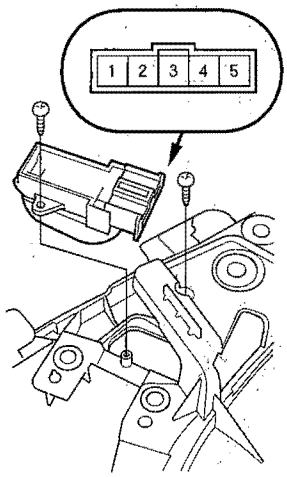

3. Check for continuity between the terminals.
   - There should be continuity between the No. 1 and No. 2 terminals when the door lock switch is in the LOCK position.
   - There should be no continuity between the No. 1 and No. 2 terminals when the door lock switch is in the neutral position or UNLOCK position.
   - There should be continuity between the No. 2 and No. 3 terminals when the door lock switch is in the UNLOCK position.
   - There should be continuity between the No. 2 and No. 3 terminals when the door lock switch is in the neutral position or LOCK position.
   - There should be continuity between the No. 5 (+) and No. 4 (−) terminals (bulb check).
4. If the continuity is not as specified, replace the bulb or switch.

Door Key Cylinder Switch Test

1. Remove the driver's door panel (see page 20-7).
2. Disconnect the 3P connector from the key cylinder switch.

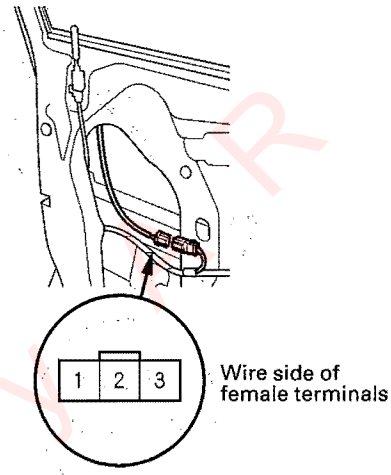

3. Check for continuity between the terminals.
   - There should be continuity between the No. 2 and No. 3 terminals when the door key cylinder switch is in LOCK position.
   - There should be no continuity between the No. 2 and No. 3 terminals when the door key cylinder switch is in the neutral or UNLOCK position.
   - There should be continuity between the No. 1 and No. 2 terminals when the door key cylinder switch is in UNLOCK position.
   - There should be no continuity between the No. 1 and No. 2 terminals when the door key cylinder switch is in the neutral or LOCK position.
4. If the continuity is not as specified, replace the door key cylinder assembly (see page 20-9).

Protected by CR

Security Indicator Test

1. Remove the driver's door panel (see page 20-7).
2. Disconnect the 2P connector from the security indicator.

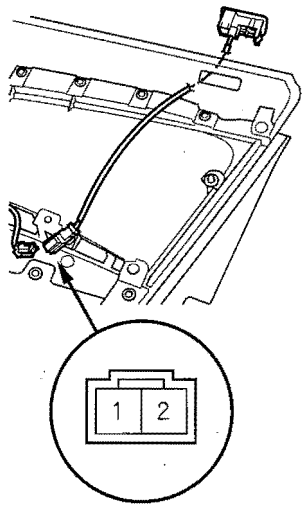

3. The LED should come on when power is connected to terminal No. 2, and ground is connected to terminal No. 1.
4. If the LED does not work as specified, replace the security indicator.

Keyless Buzzer Test/Replacement

1. Remove the left inner fender (see page 20-142).
2. Disconnect the 2P connector (A) from the keyless buzzer (B).

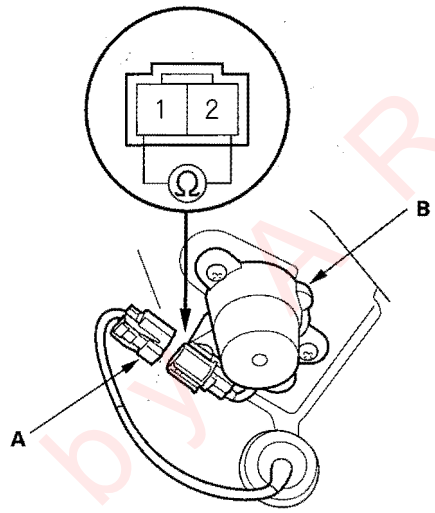

3. Test the buzzer by check the resistance across the No. 1 and No. 2 terminals. There should be about 1.7 kΩ.
4. If the buzzer is not within the specification, remove the two mounting screws, then replace the buzzer (A).

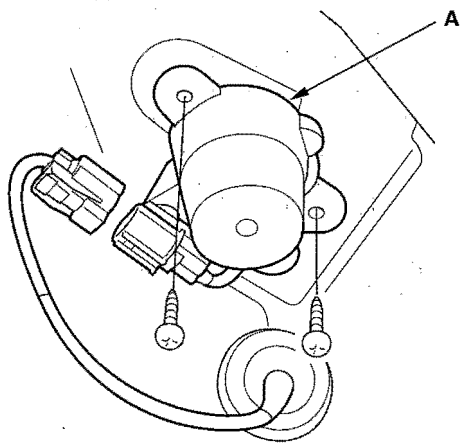

Protected by AR

Hood Switch Test

1. Open the hood.
2. Disconnect the 2P connector from the hood switch.

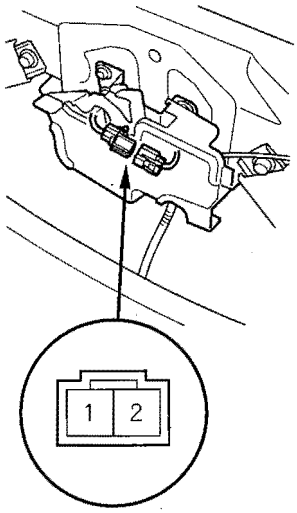

3. Check for continuity between the terminals. There should be continuity between the No. 1 and No. 2 terminals when the hood is opened (latch released). There should be no continuity between the No. 1 and No. 2 terminals when the hood is closed (latch pushed down).
4. If the continuity is not as specified, replace the hood switch.

Protected by A R

Transmitter Test

NOTE:
- If the doors unlock or lock with the transmitter, but the LED on the transmitter does not come on, the LED is faulty; replace the transmitter.
- If any door is open, you cannot lock the doors with the transmitter.
- If the UNLOCK button is pressed on the transmitter and a door is not opened within 30 seconds, the doors relock automatically.
- The doors do not lock or unlock with the transmitter if the key is in the ignition switch.
- Panic function will not operate if the ignition switch is ON (II).
- If the lock and unlock function works normally, but the driving position memory system (DPMS) is not linked, confirm the link is turned ON (press lock and unlock at the same time), then check for problems in the DPMS (see page 22-336) or B-CAN System Diagnosis Test Mode A (see page 22-108).
  Refer to System Description (see page 22-140) for more information.

With HDS

Do a transmitter test using the HDS by selecting the KEYLESS INSPECTION MENU.

Without HDS

1. Press the lock or unlock button five or six times to reset the transmitter.

   - If the locks work, the transmitter is OK.■
   - If the locks don't work, go to step 2.

2. Open the transmitter and check for water damage.

   - If you find any water damage, replace the transmitter.■
   - If there is no water damage, go to step 3.

3. Replace the transmitter battery (A) with a new one, and try to lock and unlock the doors with the transmitter by pressing the lock or unlock button five or six times.

   - If the doors lock and unlock, the transmitter is OK.■
   - If the doors don't lock and unlock, go to step 4.

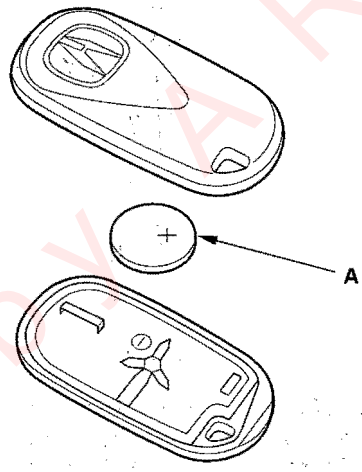

4. Reprogram the transmitter (see page 22-163), then try to lock and unlock the doors.

   - If the doors lock and unlock, the transmitter is OK.■
   - If the doors don't lock and unlock, try and program to another vehicle.
     – If the transmitter programs to another vehicle, go to B-CAN System Diagnosis Test Mode A (see page 22-108). If no trouble is found, go to keyless receiver unit input test (see page 22-156).■
     – If the transmitter will not program to another vehicle, replace the transmitter.■

Protected by AR

Transmitter Programming

Storing transmitter codes
The codes of up to three transmitters can be stored into the keyless receiver unit memory. (If a fourth code is stored, the code which was input first will be erased.)

NOTE: It is important to maintain the time limits between the steps. Make sure the doors, the hood and the trunk lid are closed.

1. Turn the ignition switch ON (II).
2. Within 1 to 4 sec, press the transmitter lock or unlock button with the transmitter aimed at the keyless receiver unit behind the driver's side of the dashboard.
3. Within 1 to 4 sec, turn the ignition switch OFF.
4. Within 1 to 4 sec, turn the ignition switch ON (II).
5. Within 1 to 4 sec, press the transmitter lock or unlock button with the transmitter aimed at the keyless receiver unit behind the driver's side of the dashboard.
6. Within 1 to 4 sec, turn the ignition switch OFF.
7. Within 1 to 4 sec, turn the ignition switch ON (II).
8. Within 1 to 4 sec, press the transmitter lock or unlock button with the transmitter aimed at the keyless receiver unit behind the driver's side of the dashboard.
9. Within 1 to 4 sec, turn the ignition switch OFF.
10. Within 4 sec, turn the ignition switch ON (II).
11. Within 1 to 4 sec, press the transmitter lock or unlock button with the transmitter aimed at the keyless receiver unit behind the driver's side of the dashboard.
12. Confirm you can hear the sound of the door lock actuators within 1 to 4 sec, then push the transmitter lock or unlock button again, or the code will not be stored.
13. Within 10 sec, aim the transmitters (up to two additional ones) whose codes you want to store in the keyless receiver, and press the transmitter lock or unlock buttons.
    Confirm that you can hear the sound of the door lock actuators after each transmitter code is stored.
14. Turn the ignition switch OFF, and remove the key.
15. Confirm proper operation with the transmitters.

    NOTE: Once the programming mode is entered, the remote button must be pressed a second time. If the button is not pressed, or if the ignition switch is turned OFF, the programming for all remotes will be cancelled.

Protected by A R

Component Location Index

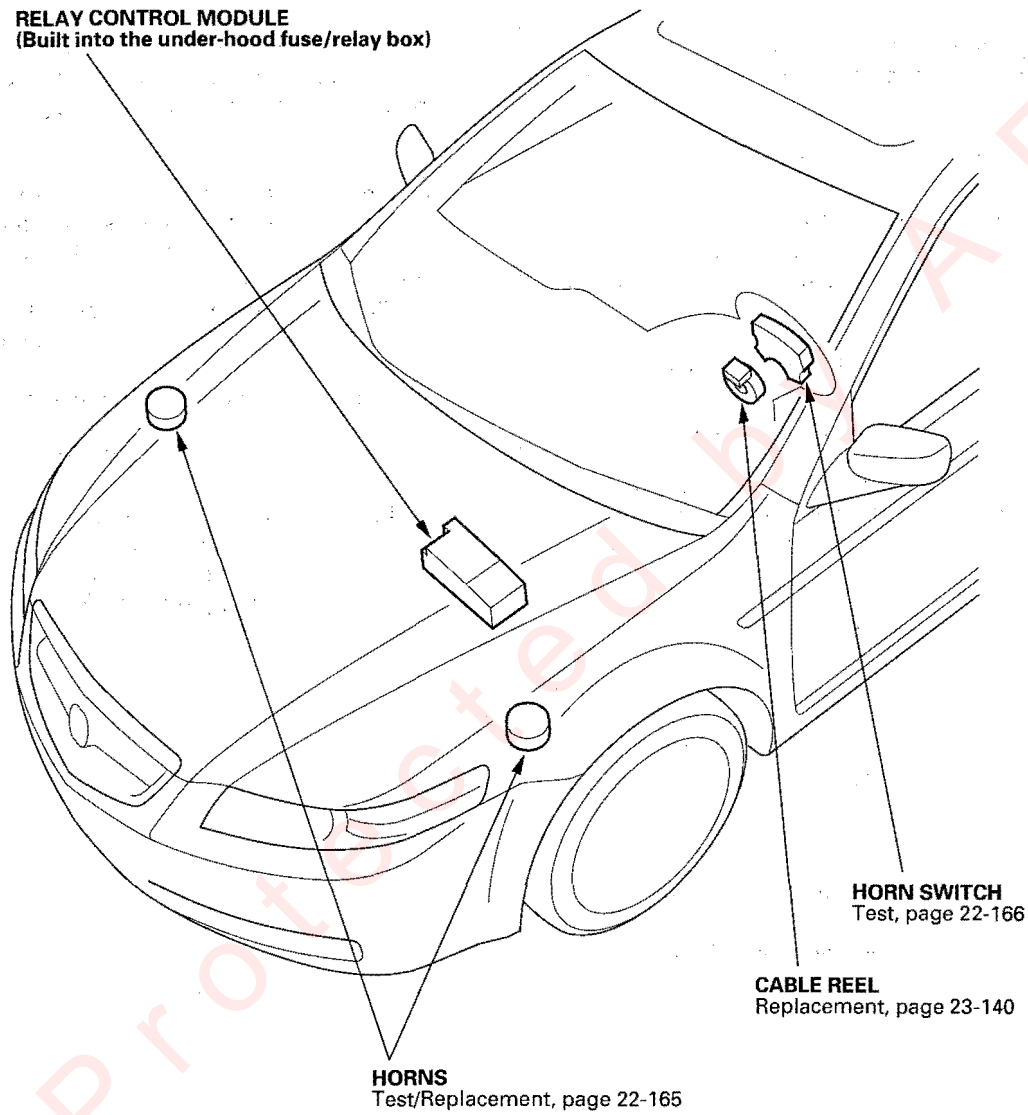

Protected by AR

Circuit Diagram

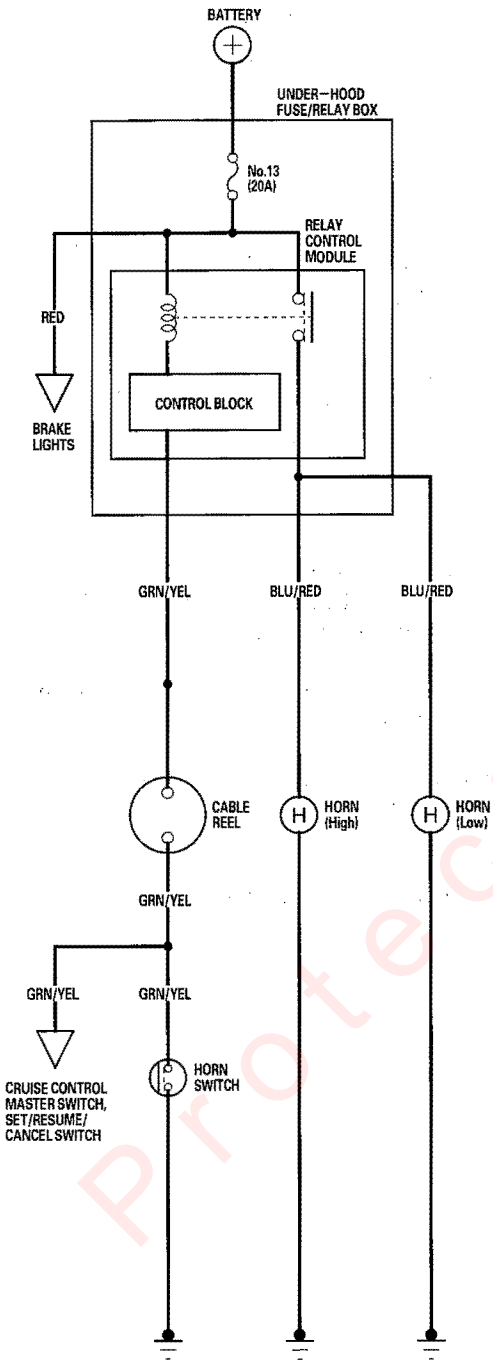

Horn Test/Replacement

1. Remove the inner fender (see page 20-142).
2. Disconnect the 1P connector (A) from each horn (B).

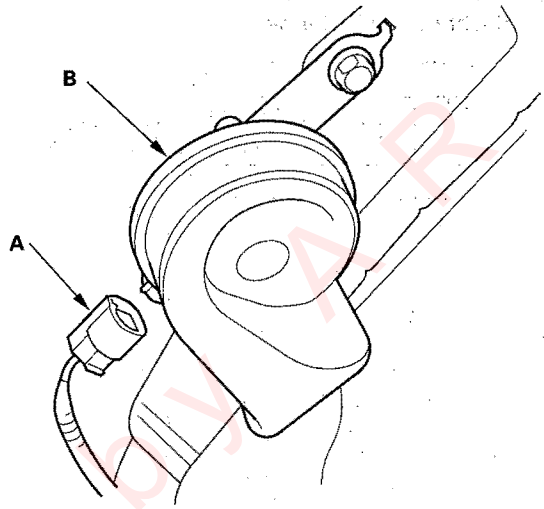

3. Test the horn by connecting battery power to the terminal (A) and grounding the bracket (B). The horn should sound.

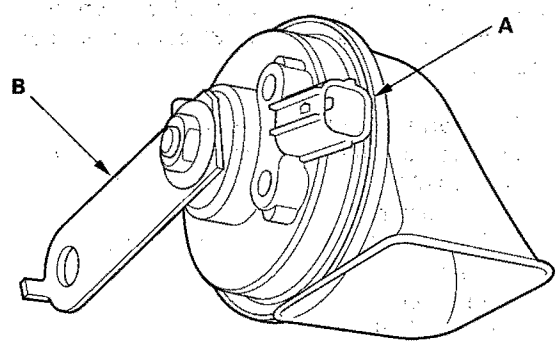

4. If it fails to sound, replace it.

Protected by AR

Horn Switch Test

1. Remove the steering column covers (see page 17-24).

2. Disconnect the cable reel 13P connector (A) from the dashboard wire harness.

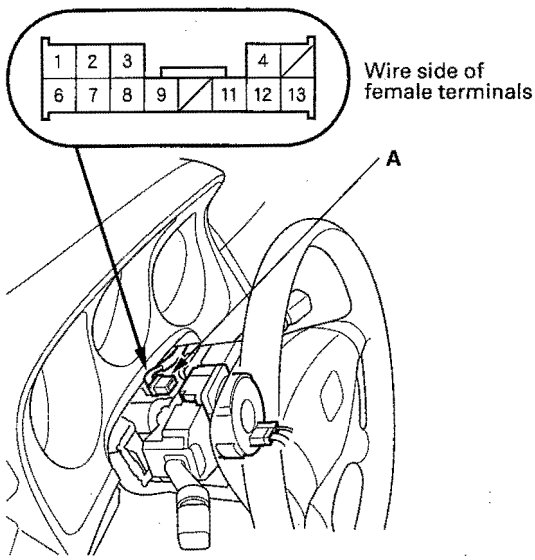

3. Using a jumper wire, connect the No. 1 terminal of the dashboard wire harness 13P connector to body ground.

   - If the horns sound, go to step 4.
   - If the horns don't sound, check these items:
     – No. 13 (20A) fuse in the under-hood fuse/relay box.
     – relay control module in the under-hood fuse/relay box.
     – horns (see page 22-165).
     – an open in the wire.

4. Reconnect the cable reel 13P connector (A) to the dashboard wire harness.

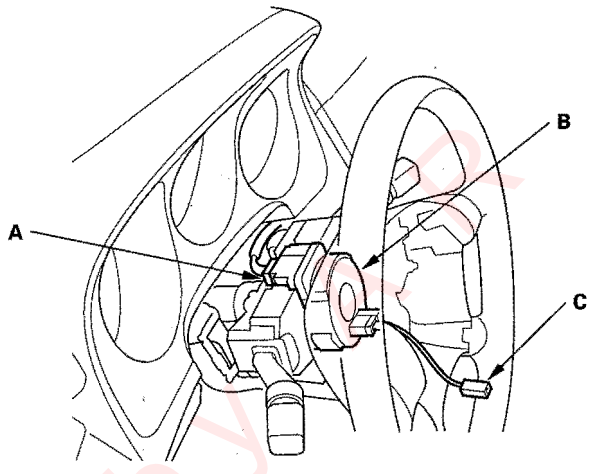

5. Remove the driver's airbag assembly (see page 23-128), and disconnect the horn switch 1P positive terminal from the cable reel (B).

6. Using a jumper wire, connect the cable reel side 1P connector (C) to body ground.

   - If the horns sound, replace the driver's airbag assembly.
   - If the horns do not sound, check these items:
     – cable reel.
     – an open in the wire (cable reel subharness).

Protected by CARX

Component Location Index

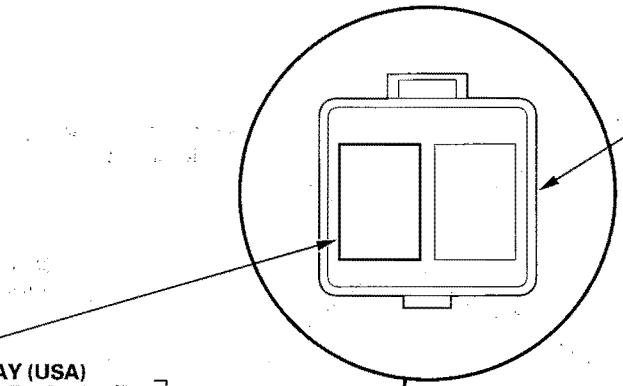

MULTI-RELAY BOX

- **FOG LIGHTS RELAY (USA)**
  [Wire colors: BLU/YEL, BLU/RED, BLU/BLK and BLU/RED]
  Test, page 22-75
- **DAYTIME RUNNING LIGHTS RELAY (Canada)**
  [Wire colors: BLU/YEL, BLU/RED, BLU/WHT and BLU/RED]
  Test, page 22-75

UNDER-HOOD FUSE/RELAY BOX
(Has built in the relay control module)

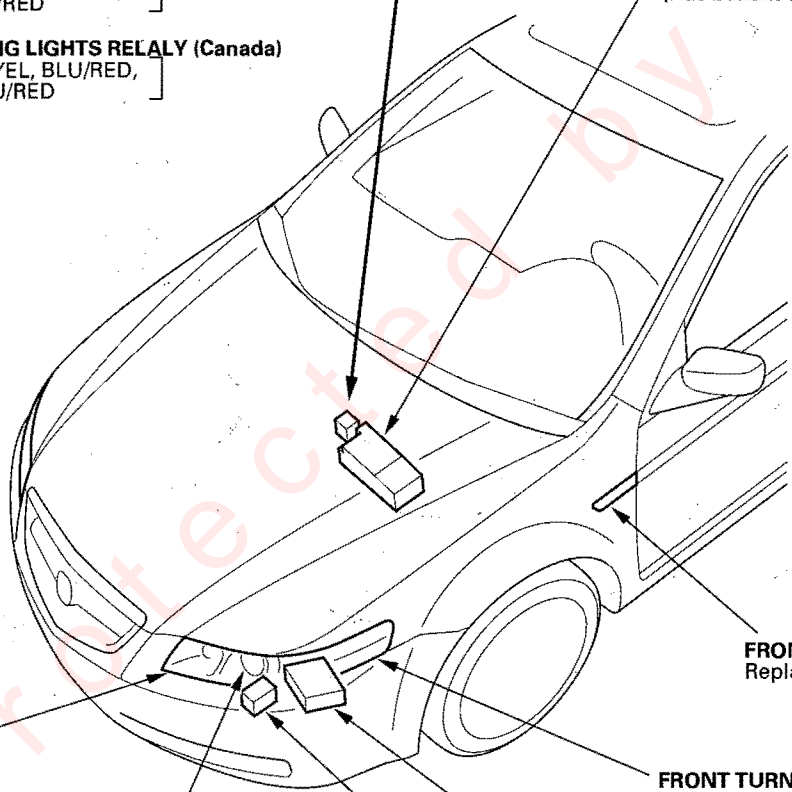

FRONT SIDE MARKER LIGHT (LED)
Replacement, page 22-191

FOG LIGHT (USA)/
DAYTIME RUNNING LIGHTS (Canada)
Bulb Replacement, page 22-190
Replacement, page 22-184

FRONT TURN SIGNAL LIGHT
Bulb Replacement, page 22-190
FRONT PARKING LIGHT
Bulb Replacement, page 22-190

HID UNIT
Replacement, page 22-188

HIGH/LOW BEAM SWITCHING SOLENOID
Test, page 22-189

HEADLIGHTS
HID Bulb Replacement, page 22-187
HID Lamp System Troubleshooting, page 22-186
Replacement, page 22-184
Adjustment, page 22-185

Protected by AR

(cont'd)

Component Location Index (cont'd)

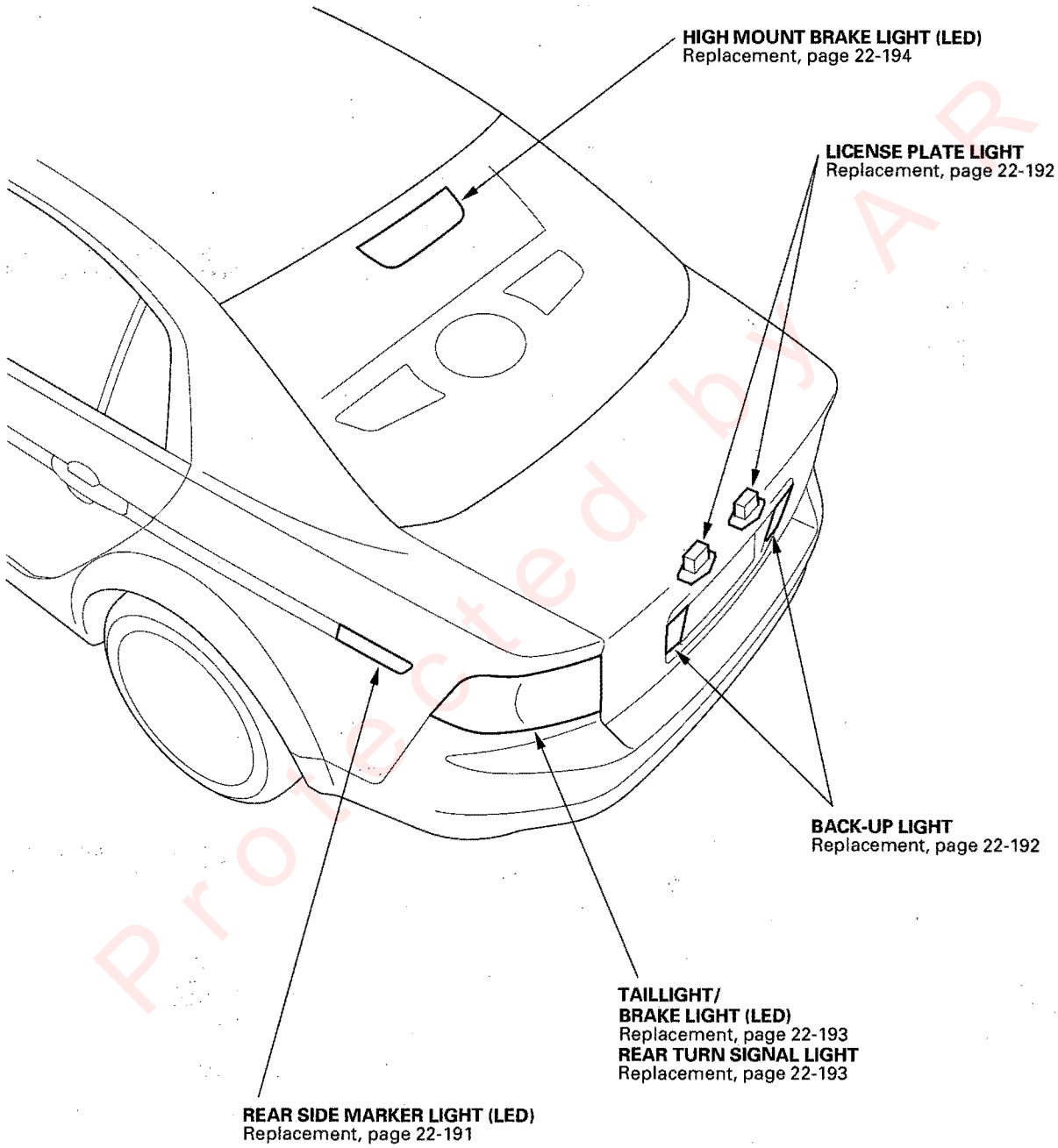

Protected by AR

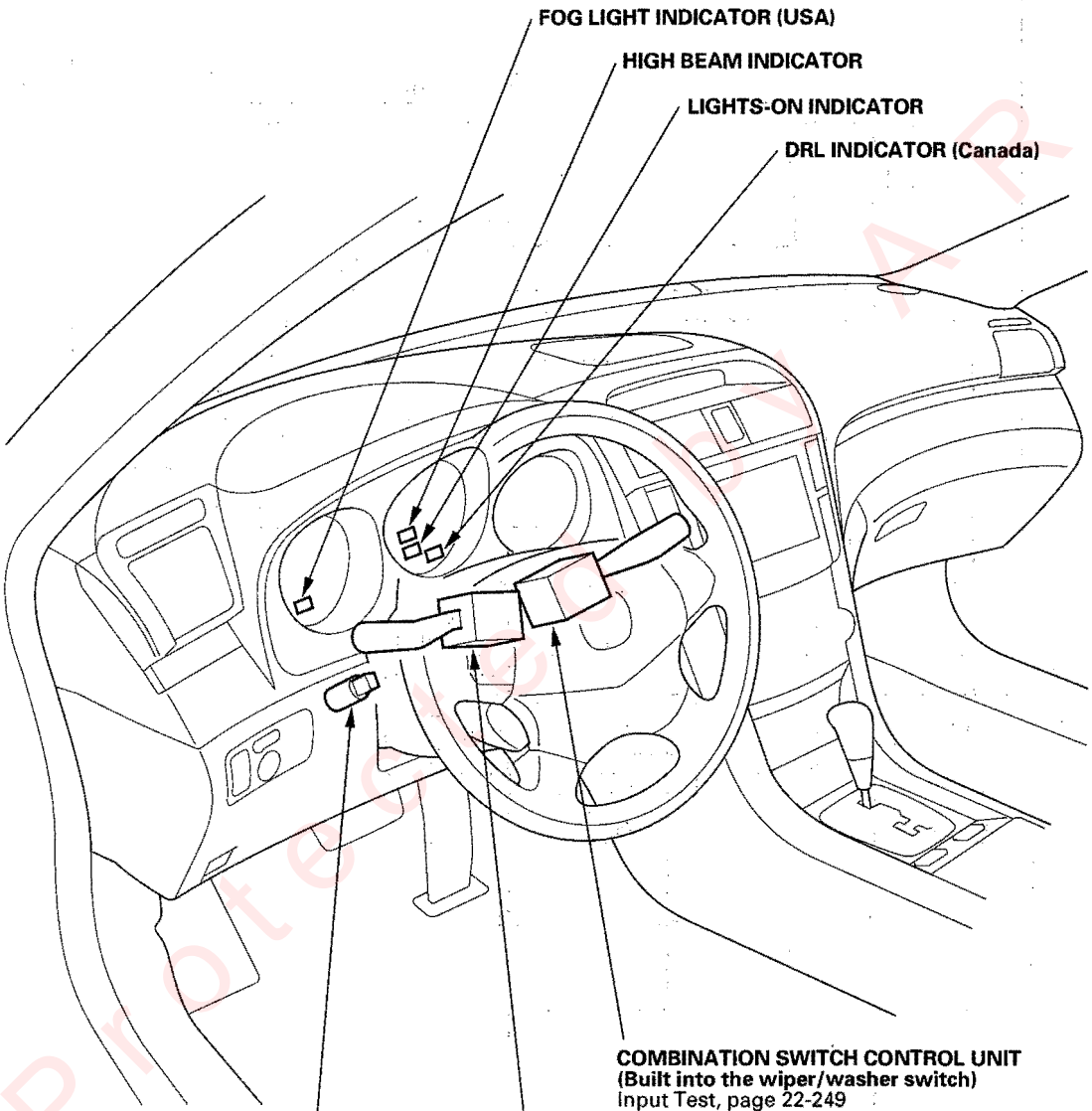

Protected by A R

Circuit Diagram

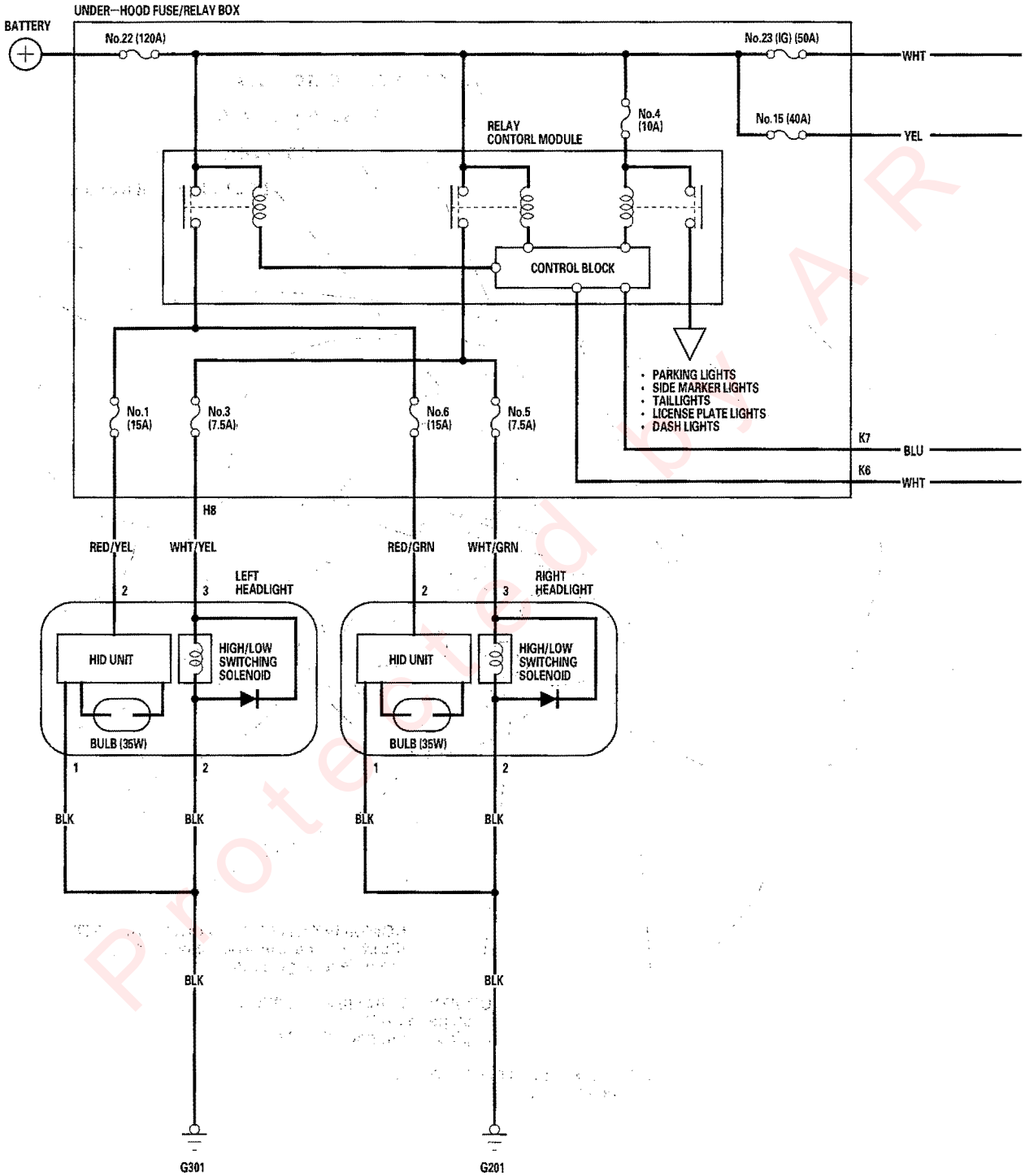

Protected by AR

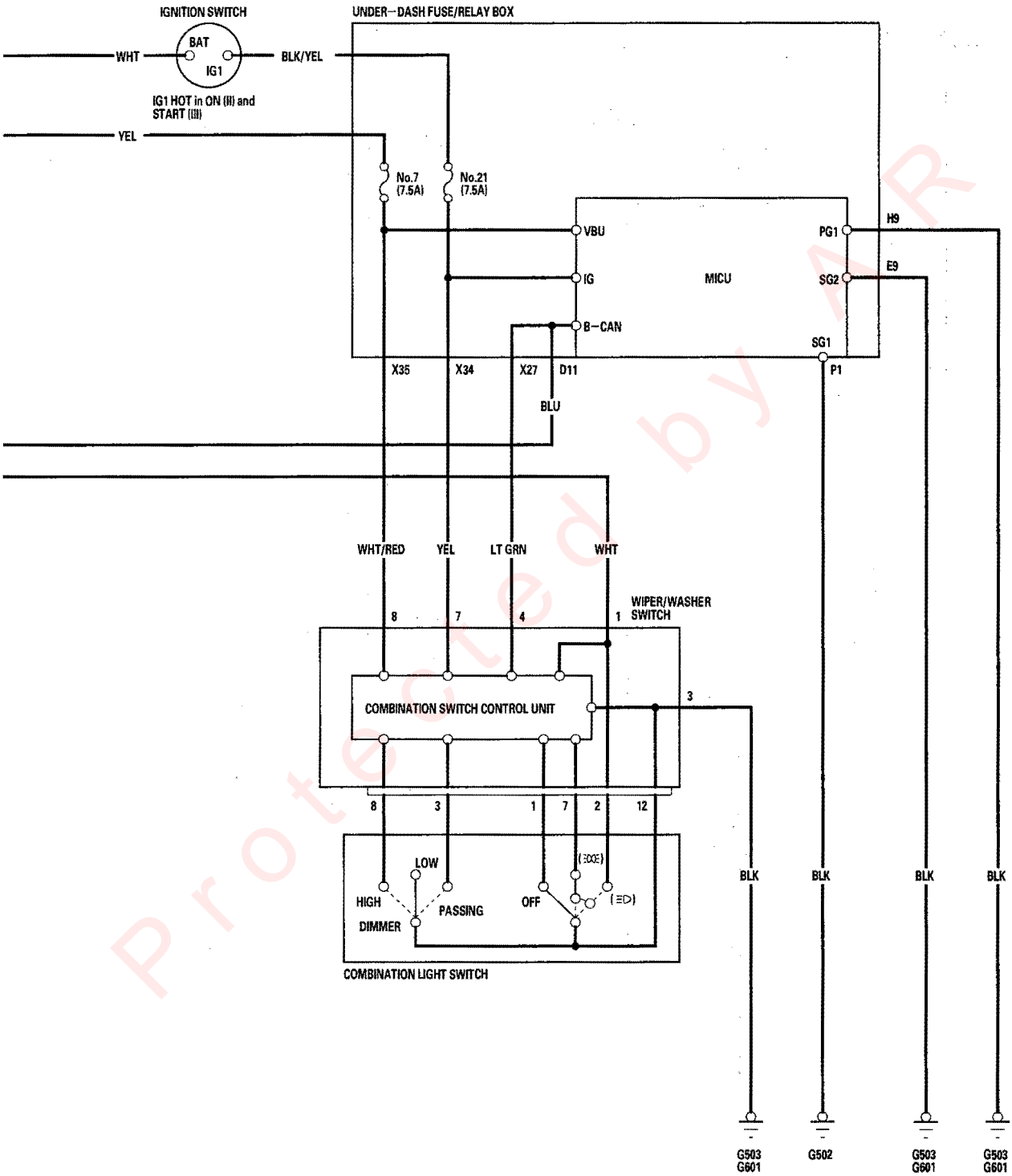

Protected by AR

Circuit Diagram - Fog Lights

USA:

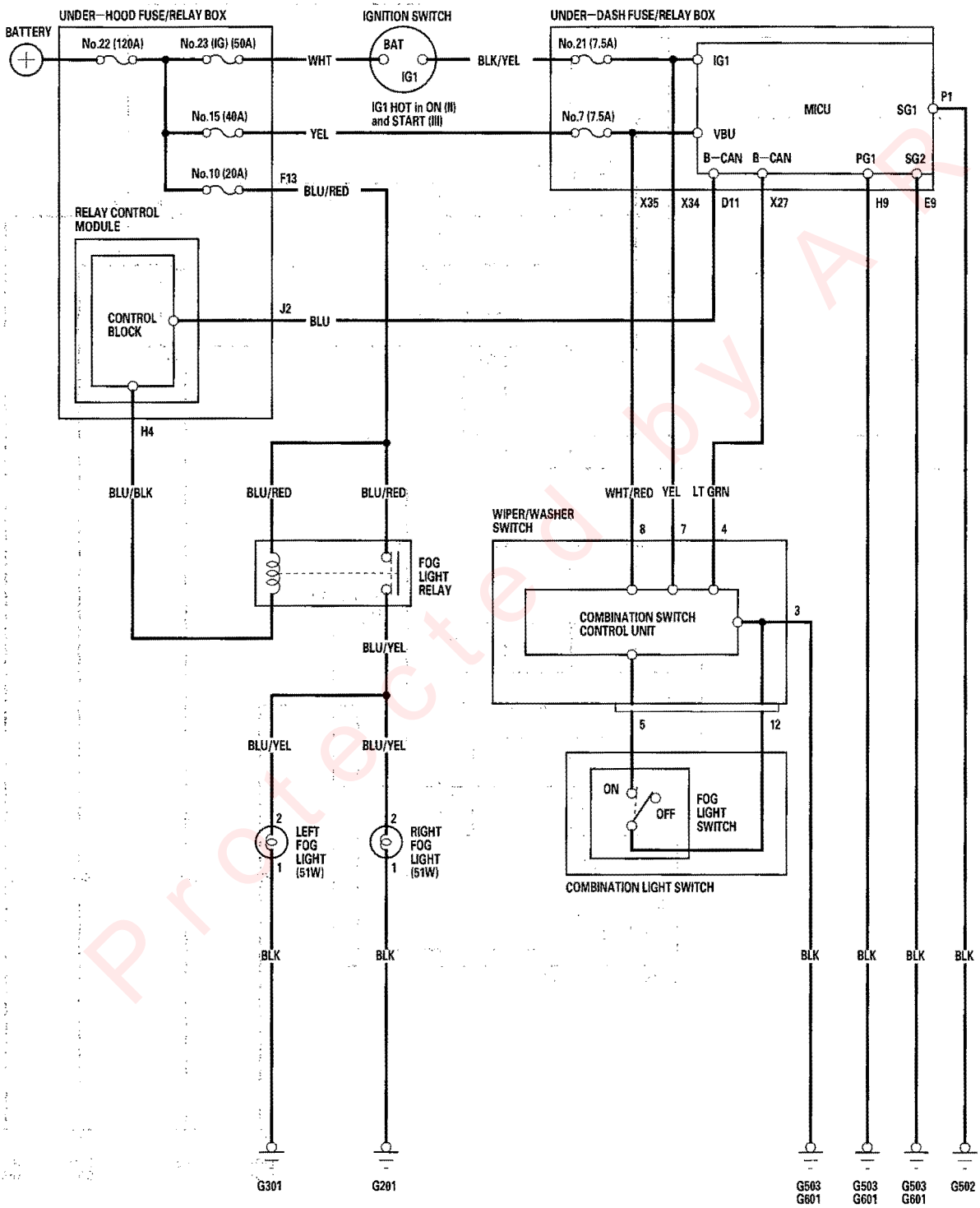

Protected by AR

Circuit Diagram - Daytime Running Lights

Canada:

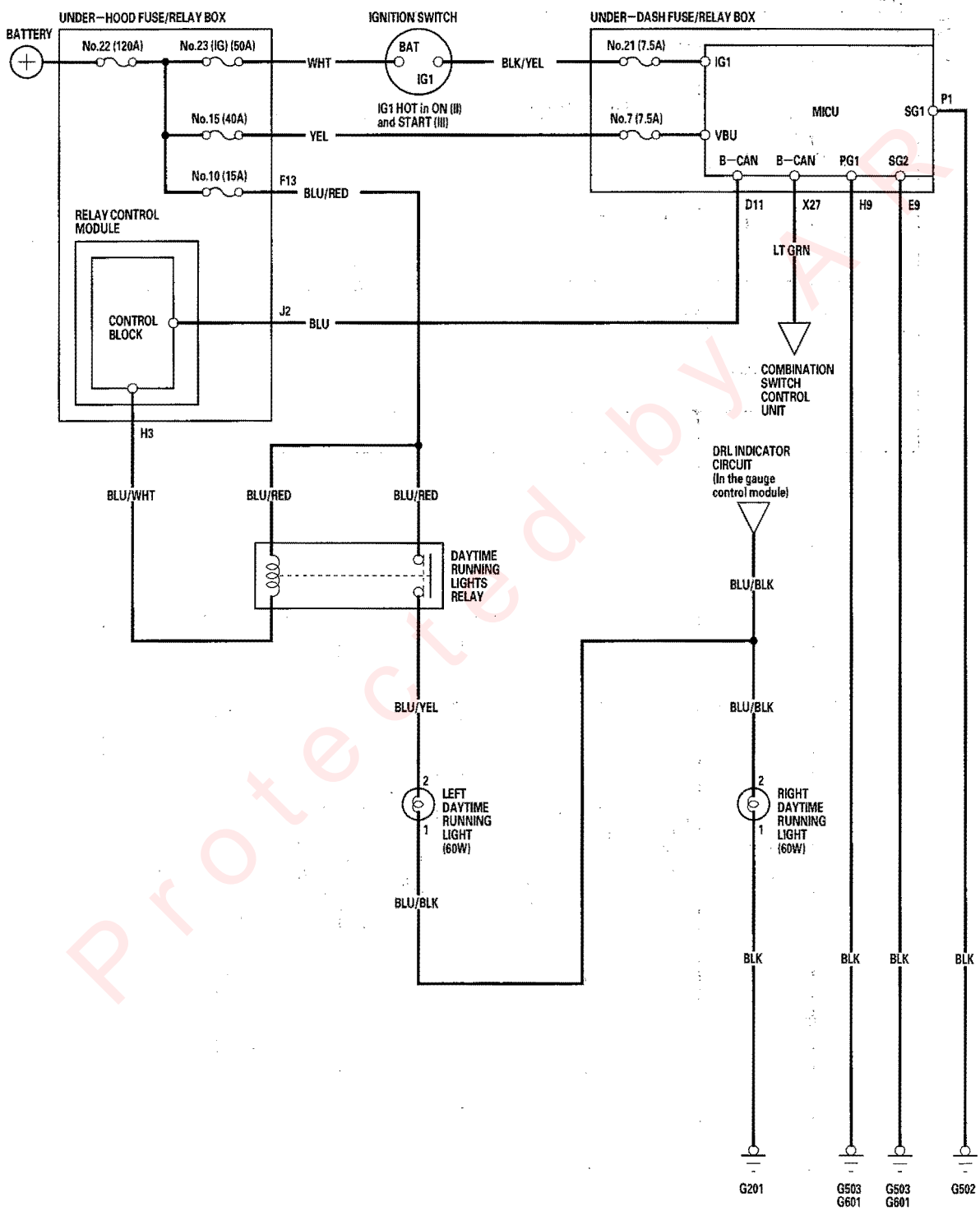

Protected by AR

Circuit Diagram - Parking/Side Marker/License Plate Lights, Taillights

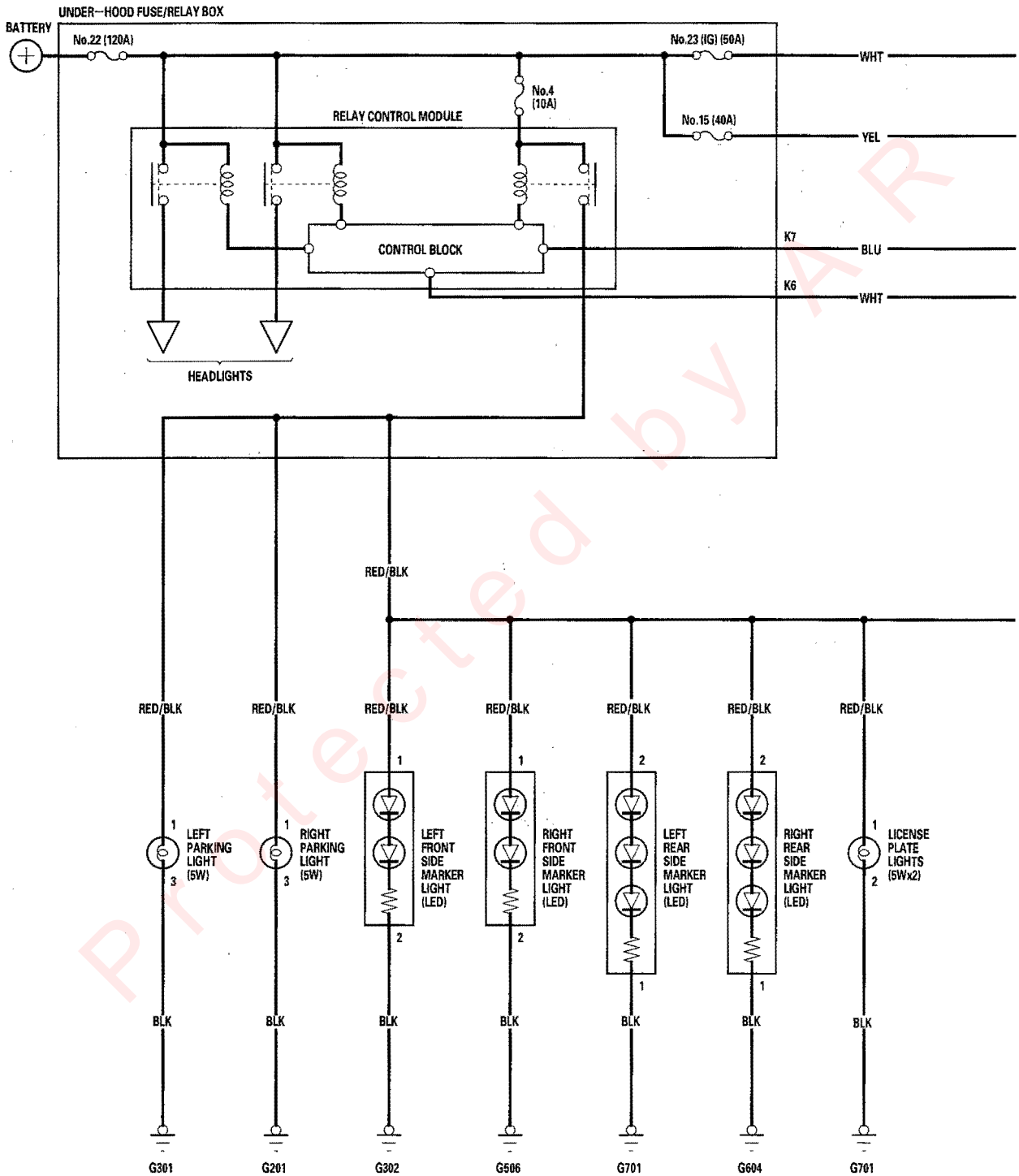

Protected by A R

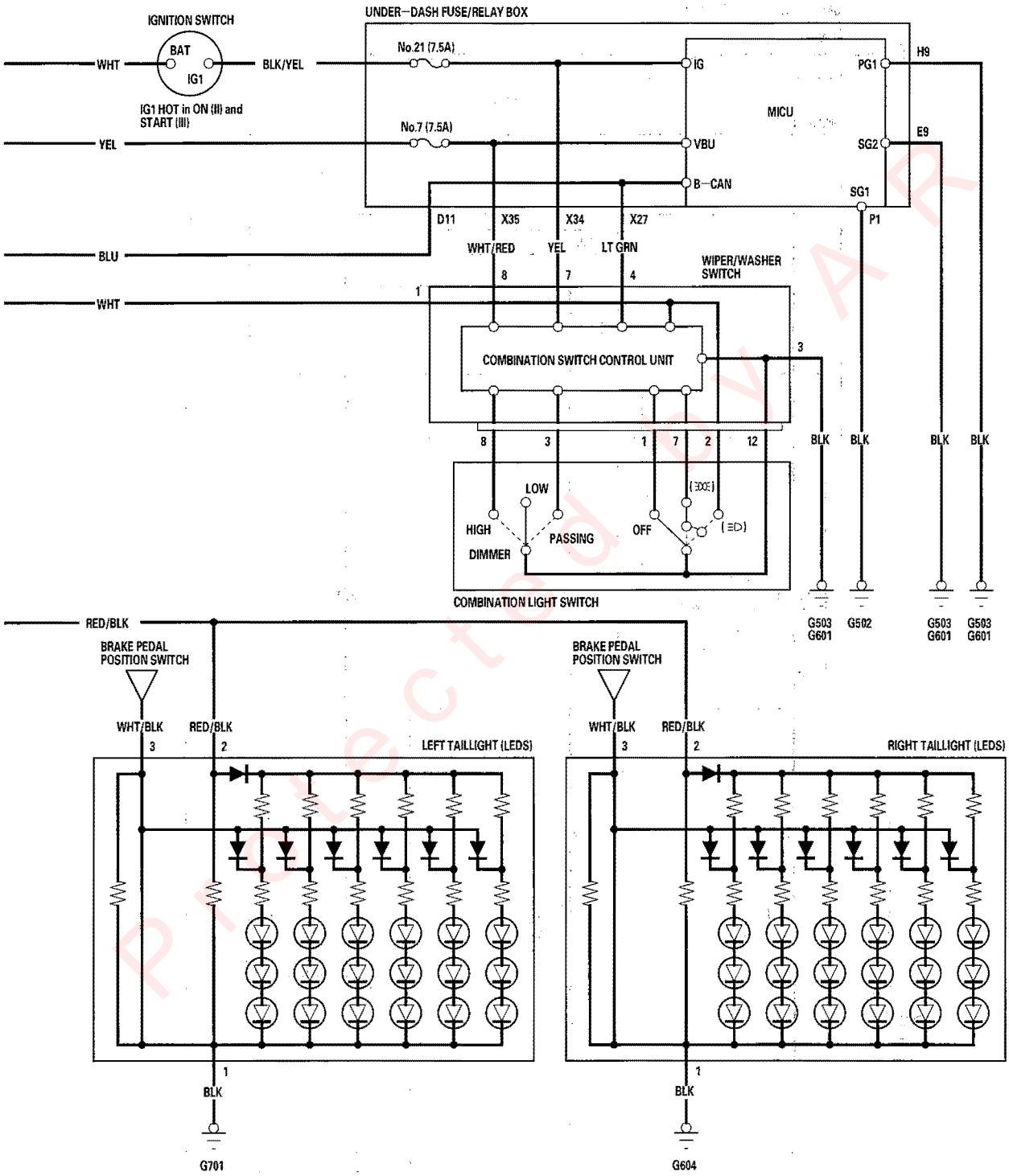

Protected by AR

Circuit Diagram - Back-up Lights

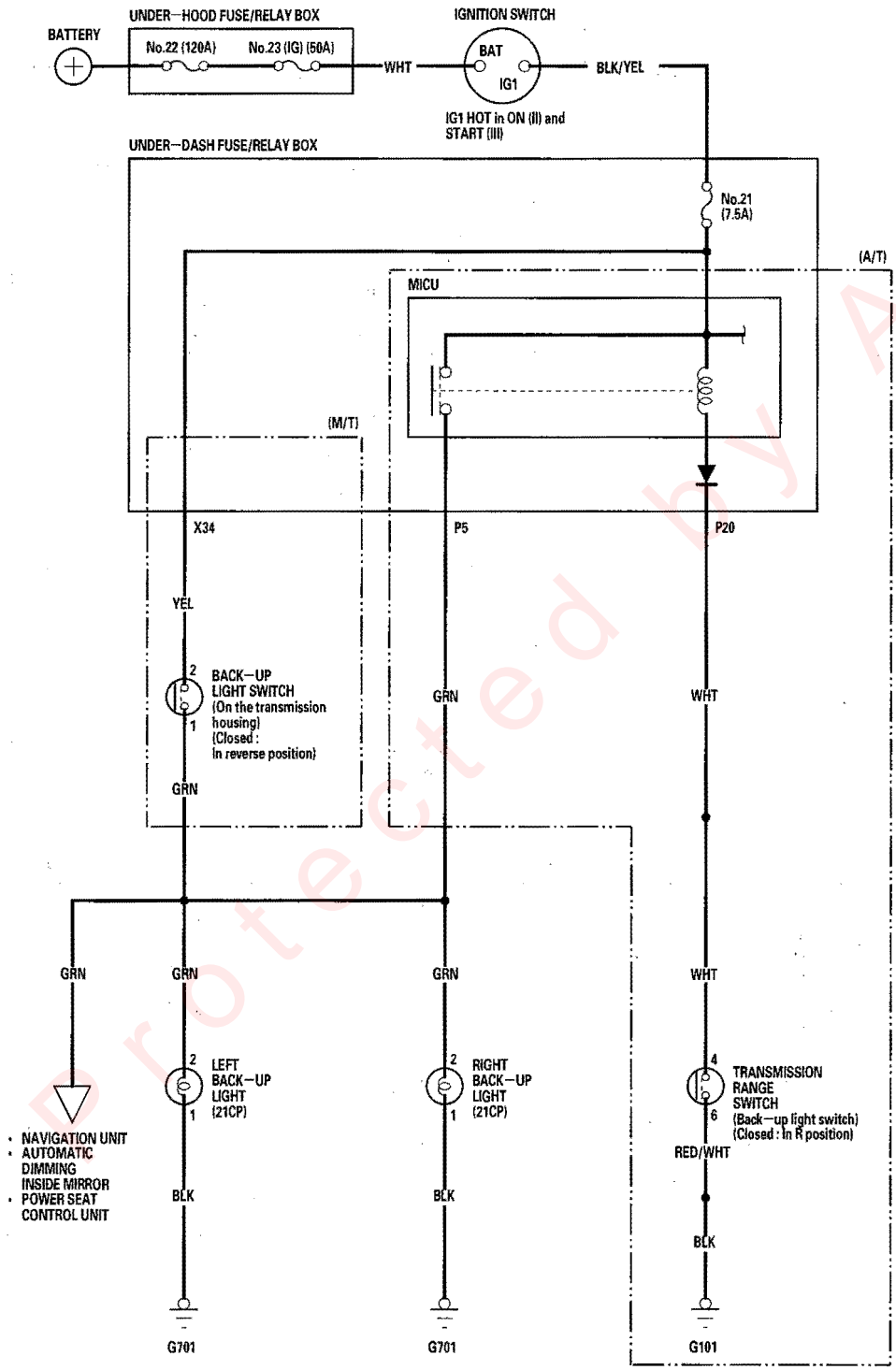

Protected by AR

Circuit Diagram - Brake Lights

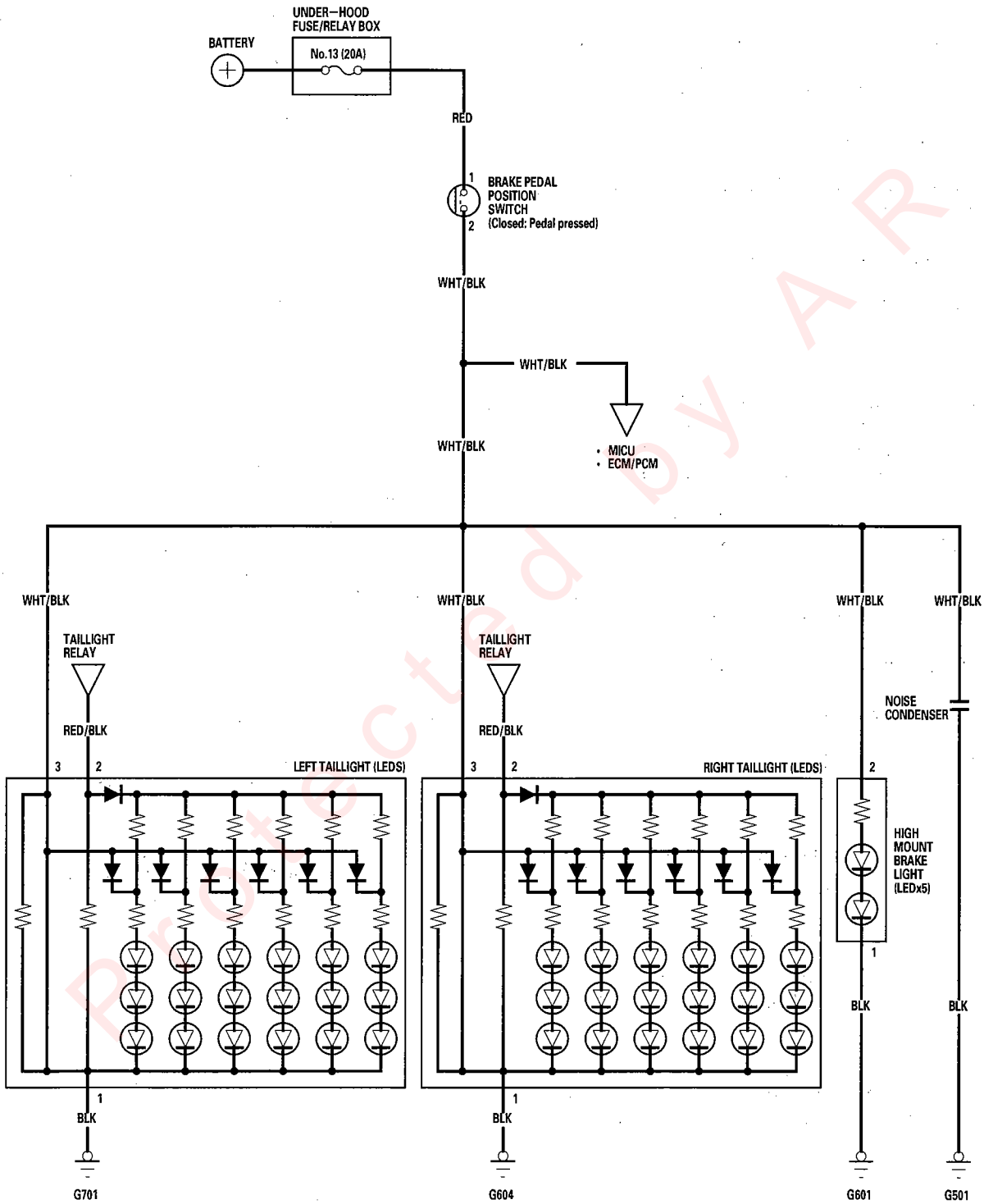

Protected by AR

DTC Troubleshooting

DTC B1075: Headlight Signal Error

NOTE: If you are troubleshooting multiple DTCs, be sure to follow the instructions in B-CAN system diagnosis test mode A (see page 22-108).

1. Clear the DTCs with the HDS.
2. Turn the headlights switch from the OFF position to the ON position.
3. Check for DTCs with the HDS.

   Is DTC B1075 indicated?

   YES—Go to step 4.

   NO—Intermittent failure, the headlight circuit is OK at this time. Check for loose or poor connections at under-hood fuse/relay box connector K (10P), and at the combination switch connector.■
4. With the headlight switch OFF, select LIGHTING SYSTEM from the HDS, and enter the DATA LIST.
5. Check the ON/OFF information of the Headlight Switch (BACK-UP) in the DATA LIST.

   Is the information indicator OFF?

   YES—Go to step 6.

   NO—Go to step 10.
6. Turn the headlight switch ON.
7. Check the ON/OFF information of the Headlight Switch (BACK-UP) in the DATA LIST.

   Is the information indicator ON?

   YES—Faulty relay control module; replace the underhood fuse/relay box.■

   NO—Go to step 8.
8. Disconnect the relay control module 10P conector and the wiper/washer switch 8P connector.
9. Check for continuity between the No. 6 terminal of the relay control module 10P connector and the No. 1 terminal of the wiper/washer switch (combination switch control unit) 8P connector.

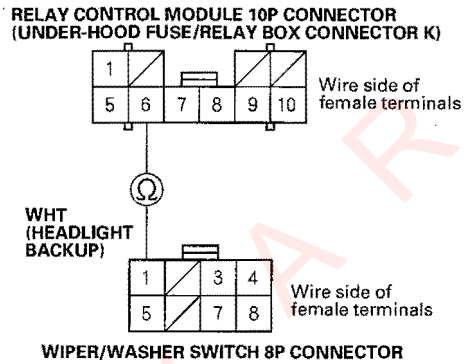

   Is there continuity?

   YES—Faulty combination switch control unit or relay control module; substitute a known-good wiper/washer switch and retest. If the DTC is no longer present, replace the original wiper/washer switch. If the DTC is still present, the relay control module is faulty, replace the under-hood fuse/relay box.■

   NO—Repair an open in the WHT wire.■
10. Disconnect the relay control module 10P connector.
11. Check for continuity between the No.6 terminal of the relay control module 10P connector and body ground.

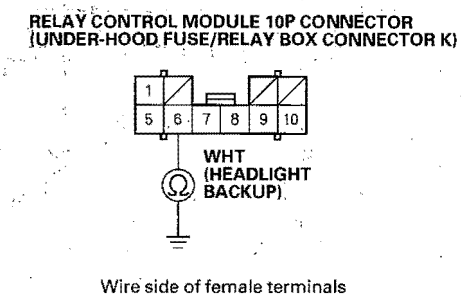

   Is there continuity?

   YES—Go to step 12.■

   NO—Faulty relay control module; replace the under-hood fuse/relay box.■

Protected by A R

12. Disconnect the wiper/washer switch 12P connector.

13. Check for continuity between the No. 6 terminal of the relay control module 10P connector and body ground.

RELAY CONTROL MODULE 10P CONNECTOR (UNDER-HOOD FUSE/RELAY BOX CONNECTOR K)

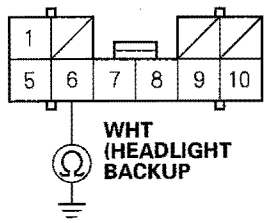

Wire side of female terminals

Is there continuity?

YES—Go to step 14.

NO—Faulty combination switch control unit, replace it.■

14. Disconnect the wiper/washer switch 8P connector.

15. Check for continuity between the No. 6 terminal of the relay control module 10P connector and body ground.

RELAY CONTROL MODULE 10P CONNECTOR (UNDER-HOOD FUSE/RELAY BOX CONNECTOR K)

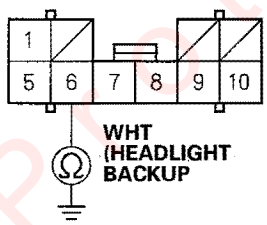

Wire side of female terminals

Is there continuity?

YES—Repair a short in the WHT wire.■

NO—Faulty combination switch control unit; replace the wiper/washer switch.■

DTC B1275: Headlight Switch OFF Position Circuit Malfunction

NOTE: If you are troubleshooting multiple DTCs, be sure to follow the instructions in B-CAN system diagnosis test mode A (see page 22-108).

1. Clear the DTCs with the HDS.

2. Turn the ignition switch OFF, and then back ON (II), and wait for 2 seconds.

3. Turn the parking (small) light switch ON and wait for 2 seconds.

4. Turn the headlight light switch (LOW) ON and wait for 2 seconds.

5. Change the dimmer switch position from low beam to high beam and wait for 2 seconds.

6. Check the DTCs with the HDS.

Is DTC B1275 indicated?

YES—Go to step 7.

NO—Intermittent failure, the combination switch and the control unit are OK at this time. Check pinfits and connections.■

7. Turn the ignition switch OFF.

8. Disconnect the combination light switch 12P connector from the wiper/washer switch.

9. Perform the combination light switch test (see page 22-182).

Is the combination light switch OK?

YES—Faulty combination switch control unit, replace the wiper/washer switch.■

NO—Replace the combination light switch.■

Protected by A P

DTC Troubleshooting (cont'd)

DTC B1276: Headlight Switch Parking (SMALL) Position Circuit Malfunction

NOTE: If you are troubleshooting multiple DTCs, be sure to follow the instructions in B-CAN system diagnosis test mode A (see page 22-108).

1. Clear the DTCs with the HDS.
2. Turn the ignition switch OFF, and then back ON (II), and wait for 2 seconds.
3. Turn the parking (small) light switch ON and wait for 2 seconds.
4. Turn the headlight light switch (LOW) ON and wait for 2 seconds.
5. Change the dimmer switch position from low beam to high beam and wait for 2 seconds.
6. Check the DTCs with the HDS.

   Is DTC B1276 indicated?

   YES—Go to step 7.

   NO—Intermittent failure, the combination switch and the control unit are OK at this time. Check pinfits and connections.■
7. Turn the ignition switch OFF.
8. Disconnect the combination light switch 12P connector from the wiper/washer switch.
9. Perform the combination light switch test (see page 22-182).

   Is the combination light switch OK?

   YES—Faulty combination switch control unit, replace the wiper/washer switch.■

   NO—Replace the combination light switch.■

DTC B1278: Headlight Switch ON Position Circuit Malfunction

NOTE: If you are troubleshooting multiple DTCs, be sure to follow the instructions in B-CAN system diagnosis test mode A (see page 22-108).

1. Clear the DTCs with the HDS.
2. Turn the ignition switch OFF, and then back ON (II), and wait for 2 seconds.
3. Turn the parking (small) light switch ON and wait for 2 seconds.
4. Turn the headlight light switch (LOW) ON and wait for 2 seconds.
5. Change the dimmer switch position from low beam to high beam and wait for 2 seconds.
6. Check the DTCs with the HDS.

   Is DTC B1278 indicated?

   YES—Go to step 7.

   NO—Intermittent failure, the combination switch and the control unit are OK at this time. Check pinfits and connections.■
7. Turn the ignition switch OFF.
8. Disconnect the combination light switch 12P connector from the wiper/washer switch.
9. Perform the combination light switch test (see page 22-182).

   Is the combination light switch OK?

   YES—Faulty combination switch control unit, replace the wiper/washer switch.■

   NO—Replace the combination light switch.■

Protected by AP

DTC B1279: Headlight Switch DIMMER Position Circuit Malfunction

NOTE: If you are troubleshooting multiple DTCs, be sure to follow the instructions in B-CAN system diagnosis test mode A (see page 22-108).

1. Clear the DTCs with the HDS.
2. Turn the ignition switch OFF and then back ON (II), then turn the headlight switch ON.
3. Change the combination light switch from low beam to high beam and wait for 2 seconds.
4. Pull and hold the combination light switch lever and keep the passing switch position for more than 2 seconds.
5. Check for DTCs with the HDS.

   Is DTC B1279 indicated?

   YES—Go to step 6.

   NO—Intermittent failure, the combination switch and the combination switch control unit are OK at this time. Check pinfits and connections.■
6. Turn the ignition switch OFF.
7. Disconnect the combination light switch 12P connector from the wiper/washer switch.
8. Perform the combination light switch test (see page 22-182).

   Is the combination light switch OK?

   YES—Faulty combination switch control unit, replace the wiper/washer switch.■

   NO—Replace the combination light switch.■

DTC B1280: Turn Signal Switch Circuit Malfunction

NOTE: If you are troubleshooting multiple DTCs, be sure to follow the instructions in B-CAN system diagnosis test mode A (see page 22-108).

1. Clear the DTCs with the HDS.
2. Turn the ignition switch OFF, and then back ON (II).
3. Turn the turn signal switch to the left position and wait for 2 seconds.
4. Turn the turn signal switch to the right position and wait for 2 seconds.
5. Check for DTCs with the HDS.

   Is DTC B1280 indicated?

   YES—Go to step 6.

   NO—Intermittent failure, the turn signal light switch and the combination switch control unit are OK at this time. Check pinfits and connections.■
6. Turn the ignition switch OFF.
7. Disconnect the combination light switch 12P connector from the wiper/washer switch.
8. Check for short in the turn signal light switch terminals in each switch position (see page 22-182).

   Is there a short?

   YES—Faulty, turn signal light switch, replace the combination light switch.■

   NO—Faulty combination switch control unit, replace the wiper/washer switch.■

Protected by AR

Combination Light Switch Test/Replacement

1. Remove the dashboard lower cover (see page 20-82).
2. Remove the steering column covers (see page 17-24).
3. Disconnect the combination light switch 12P connector (A) from the wiper/washer switch (B).

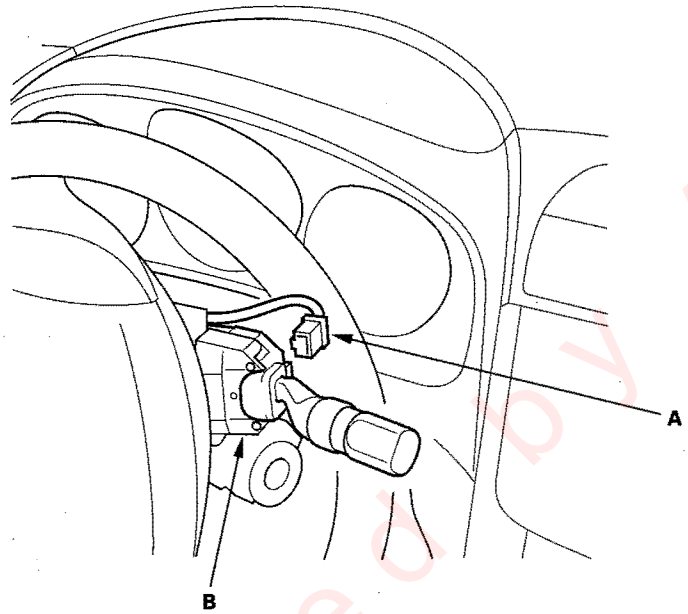

4. Remove the two screws, then slide out the combination light switch (A).

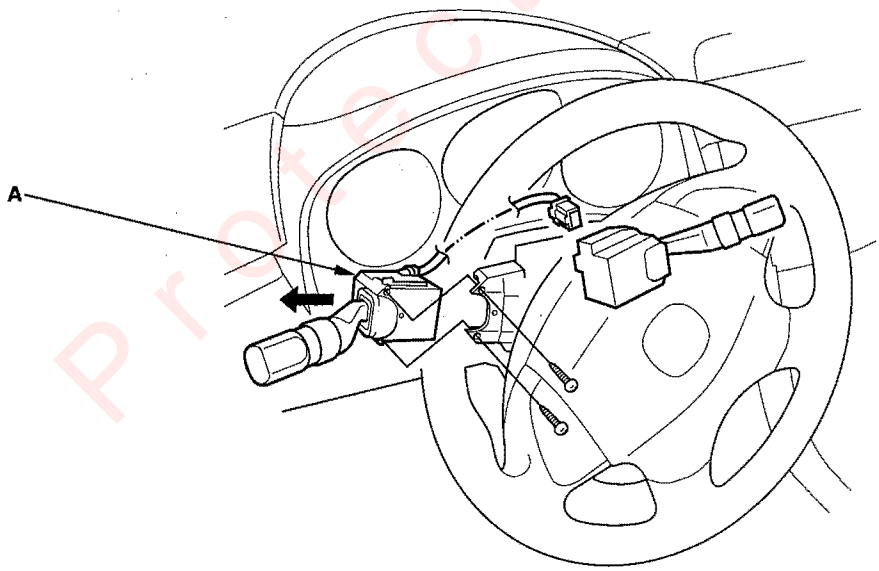

Protected by AR

5. Inspect the connector terminals to be sure they are all making good contact.
   - If the terminals are bent, loose or corroded, repair them as necessary, and recheck the system.
   - If the terminals look OK, check for continuity between the terminals in each switch position according to the tables.

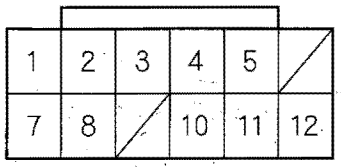

Wire side of female terminals

Light switch:

Position \ Terminal			1	2	3	4	7	12
Headlight switch	OFF		○					○
	≡D						○	○
		LOW		○			○	○
		HIGH		○			○	○
						○		○
Passing switch	OFF							
	ON				○			○

Turn signal switch:

Position \ Terminal	4	10	12
LEFT	○		○
Neutral			
RIGHT		○	○

Fog light switch:

Position \ Terminal	5	12
OFF		
ON	○	○

6. If the continuity check is not as specified, replace the switch.

Protected by AR

Headlight Replacement

1. Remove the front bumper (see page 20-118).
2. Remove the two screws and front bumper spacer (A).

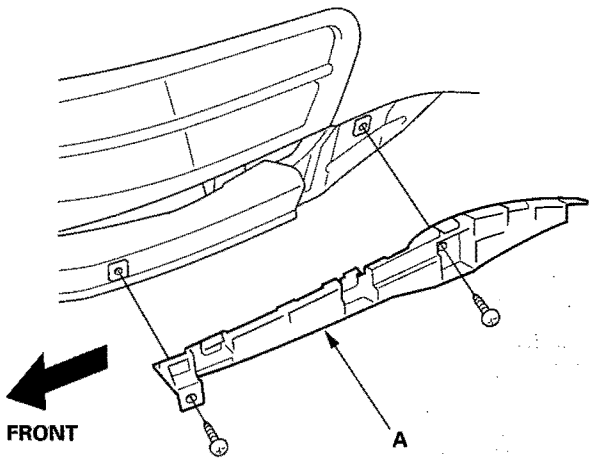

3. Remove the connectors (A) from the headlight assembly (B).

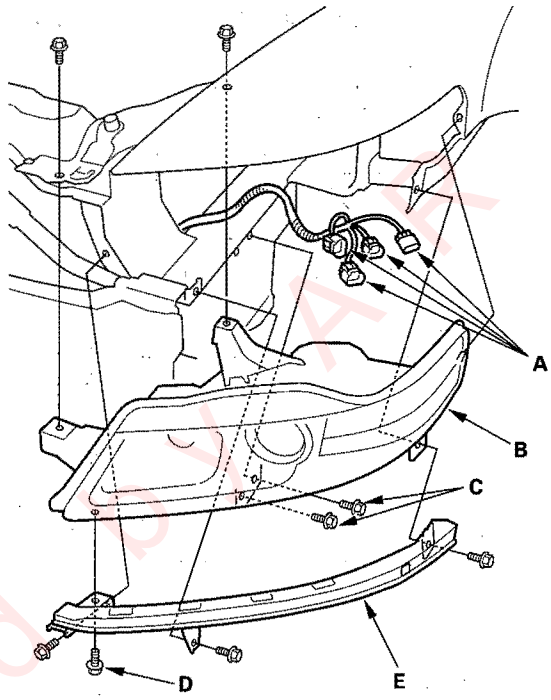

4. Remove the seven mounting bolts and the headlight. For the right headlight assembly, remove the washer reservoir tank (see page 22-252) to access mounting bolts (C).
5. Remove the bolt (D) and the corner upper beam (E) from the headlight.
6. Install the headlight in the reverse order of removal.
7. After replacement, adjust the headlights to local requirement.

Protected by AAA

Headlight Adjustment

⚠CAUTION

Headlights become very hot during use; do not touch them or any attaching hardware immediately after they have been turned off.

Before adjusting the headlights:
- Park the vehicle on a level surface.
- Make sure the tire pressures are correct.
- Have the driver or someone who weights the same sit in the driver's seat.

1. Clean the outer lens so that you can see the center (A) of the headlights.

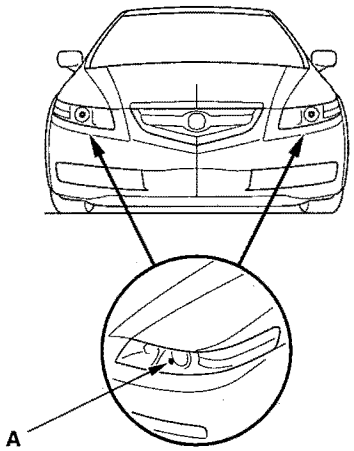

2. Park the vehicle 25 ft (7.5 m) away from a wall or a screen (A).

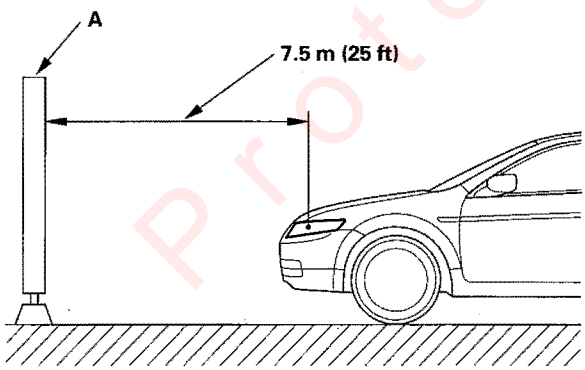

3. Turn the low beams on.

4. Determine if the headlights are aimed properly.

   Vertical adjustment:
   Measure the height of the headlights (A). The lights should reflect 52 mm (2.1 in.) below headlight height (B).

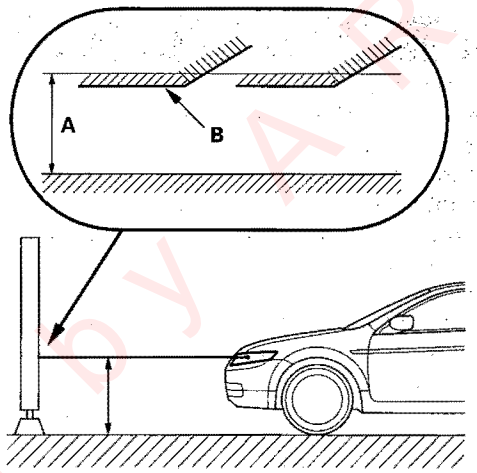

5. If necessary, open the hood and adjust the headlights to local requirements by turning the vertical adjuster.

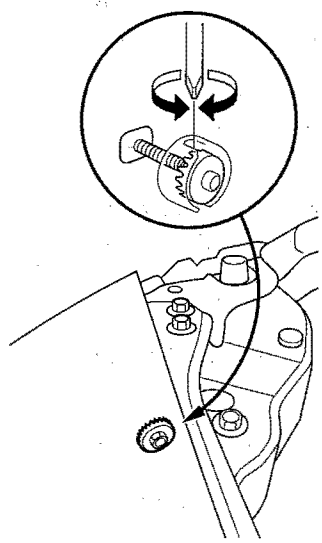

Protected by AR

HID Lamp System Troubleshooting

⚠ WARNING

A transient high tension (25,000 V) occurs at the bulb sockets or the high intensity discharge (HID) lamps when the combination light switch is turned ON, it may cause serious electrical shock or electrocution if you do not observe the cautions below.

⚠ CAUTION

- Never turn on the combination light switch before fitting the HID bulbs to their bulb sockets and completing the reassembly of the headlight assembly.
- Do not service the headlights assembly in wet conditions, such as rain or snow, near a sprinkler system, or when your hands are wet to prevent electrocution.
- Do not touch the serface of the HID bulbs with your bare hands and do not stain it with any oils and fats.
- Do not disassemble the inverter unit and the ignitor unit.
- Do not turn on the HID bulb by using a power source other than the battery mounted on your vehicle.

1. Check the No. 1 (15A) and No. 6 (15A) fuses in the under-hood fuse/relay box.

   Are the fuses OK?
   YES — Go to step 2.
   NO — Replace the fuse(s), and recheck. ■

2. Make sure you have the anti-theft codes for the radio and the navigation system, then write down the channels for the XM radio presets. Make sure the ignition switch is OFF.

3. Turn the combination light switch OFF.

4. Disconnect the battery negative cable, then disconnect the positive cable.

5. Remove the bulb socket from the HID bulb (see page 22-187).

6. Substitute a known-good HID bulb reassemble and recheck.

   Does the headlight come on?
   YES — Replace the original HID bulb. ■
   NO — Go to step 7.

7. Reconnect the battery positive cable and negative cable.

8. Disconnect the 2P connector from the HID unit.

9. Turn the combination light switch ON.

10. Measure voltage between the No. 2 terminal of the HID unit 2P connector and body ground.

HID UNIT 2P CONNECTOR

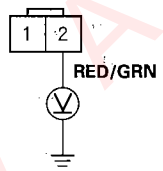

Wire side of female terminals

Is there battery voltage?
YES — Go to step 11.
NO — Repair open in the wire between the under-hood fuse/relay box and the HID unit. ■

11. Turn the combination light switch OFF.

12. Check for continuity between the No. 1 terminal of the HID unit 2P connecter and body ground.

HID UNIT 2P CONNECTOR

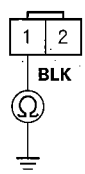

Wire side of female terminals

Is there continuity?
YES — Substitute a known-good HID, and recheck. If the symptom/indication goes away, replace the original inverter unit. ■
NO — Repair open in the wire between the HID unit and body ground. If the wire is OK, check for poor ground at G201 or G301. ■

NOTE: Enter the anti-theft codes for the radio and the navigation system, then enter the customer's XM radio channel presets.

Protected by AR

HID Bulb Replacement

⚠WARNING

A transient high tension (25,000 V) occurs at the bulb sockets of the high intensity discharge (HID) lamps when the combination light switch is turned ON, it may cause serious electrical shock or electrocution if you do not observe the cautions below.

⚠CAUTION

- Never turn on the combination light switch before fitting the HID bulbs to their bulb sockets and completing the reassembly of the headlight assembly.
- Do not service the headlights assembly in wet conditions, such as rain or snow, near a sprinkler system, or when your hands are wet to prevent electrocution.
- Do not touch the surface of the HID bulbs with your bare hands and do not stain it with any oils and fats.
- Do not disassemble the inverter unit and the ignitor unit.
- Do not turn on the HID bulb by using a power source other than the battery mounted on your vehicle.

1. Make sure you have the anti-theft codes for the radio and the navigation system, then write down the XM radio channel preset. Make sure the ignition switch is OFF.
2. Turn the combination light switch OFF.
3. Disconnect the battery negative cable, then disconnect the positive cable.
4. Remove the headlight assembly (see page 22-184).
5. Remove the Torx bolt using a tamper-proof Torx T20 bit.

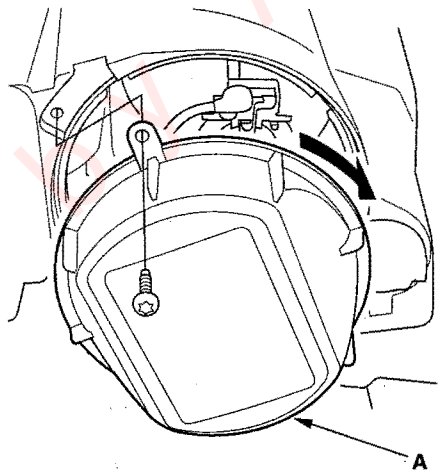

6. Turn the cover (A) 45° counterclockwise to remove it from the headlight assembly.

(cont'd)

Protected by MAR

HID Bulb Replacement (cont'd)

7. Turn the socket (A) 45° counterclockwise to remove it from the bulb (B).

Headlight: 35 W

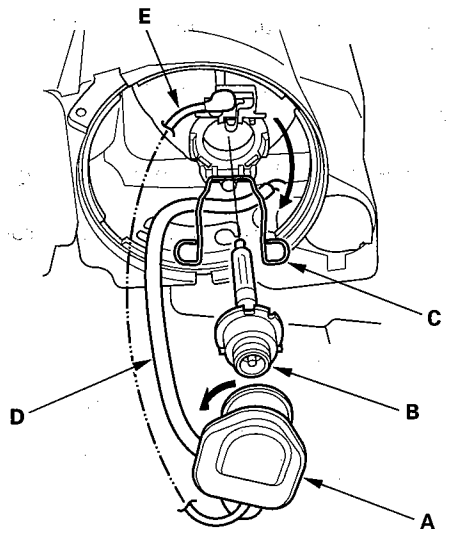

8. Pull the retaining spring (C) away from the bulb then remove the bulb.
9. Make sure the bulb harness (D) is routed correctly so it does not contact the reflector (E).
10. Install the new bulb in the reverse order of removal. Make sure the notches in the bulb align with the tabs in the headlight.
11. After reconnecting the battery, enter the anti-theft codes for the radio and the navigation system, then enter the customer's XM radio channel presets.

HID Unit Replacement

1. Make sure you have the anti-theft code for the radio and the navigation system, then write down the channels for the XM radio presets. Make sure the ignition switch is OFF.
2. Turn the combination light switch OFF.
3. Disconnect the battery negative cable, then disconnect the positive cable.
4. Remove the headlight assembly (see page 22-184).
5. Remove the bulb socket from the HID bulb (see page 22-187).
6. Remove the three mounting screws, the HID unit (A) and HID unit cover (B).

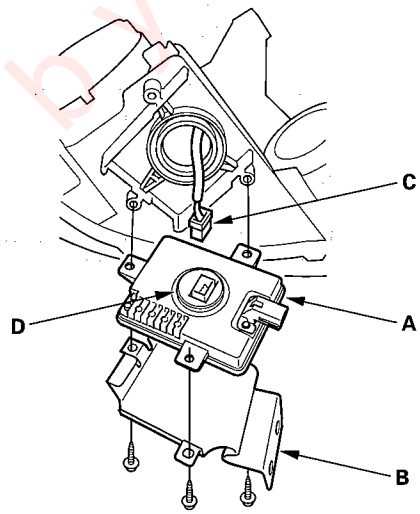

7. Disconnect the 4P connector (C) from the HID unit.
8. Inspect the gasket (D) for damage. If damaged, replace it.
9. Install in the reverse order of removal.
10. Enter the anti-theft codes for the radio and the navigation system, then enter the customer's XM radio channel presets.

Protected by AR

High/Low Beam Switching Solenoid Test

1. Remove the battery cover (left side) or right front fender trim (right side) (see page 20-131).

2. Disconnect the 3P connector (A) from the high/low switching solenoid connector (B).

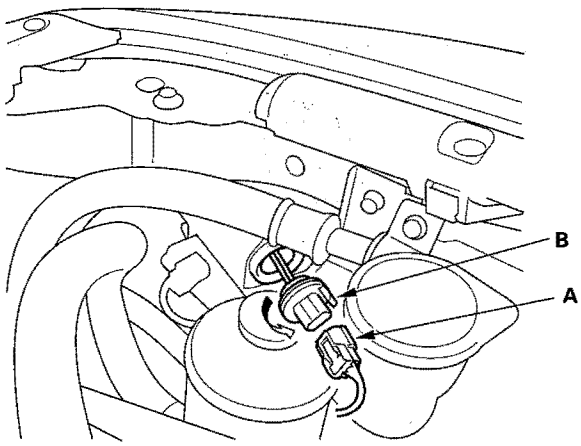

NOTE: The illustration shows right side.

3. Turn the solenoid connector 45° counterclockwire, and pull it out slightly from the headlight housing.

4. Check the solenoid operation by connecting power to the No. 3 terminal and ground the No. 2 terminal momentarily. The solenoid should work.

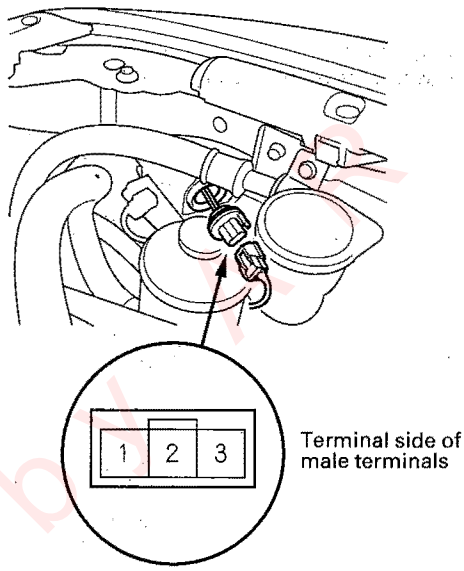

5. If the solenoid does not work, replace the headlight assembly.

Protected by ...

Bulb Replacement

Fog Light (USA)/Daytime Running Lights (Canada)

1. Disconnect the 2P connector (A) from the light.

Fog Light: 51 W
Daytime Running Light: 60 W

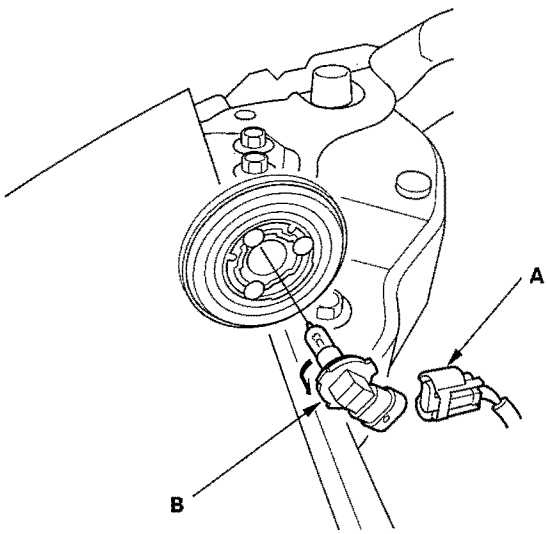

2. Turn the bulb socket (B) 45° counterclockwise to remove it from the headlight housing.
3. Install a new bulb in the reverse order of removal. Make sure the notches in the bulb align with the tabs in the headlight.

NOTE: Do not touch the glass of the bulb with your hands. If necessary, clean the glass area with alcohol.

Front Turn Signal/Front Parking Light

1. Remove the inner fender (see page 20-142).
2. Disconnect the 3P connector (A) from the front turn signal/front parking light.

Front Turn Signal/Front Parking Light: 21/5 W

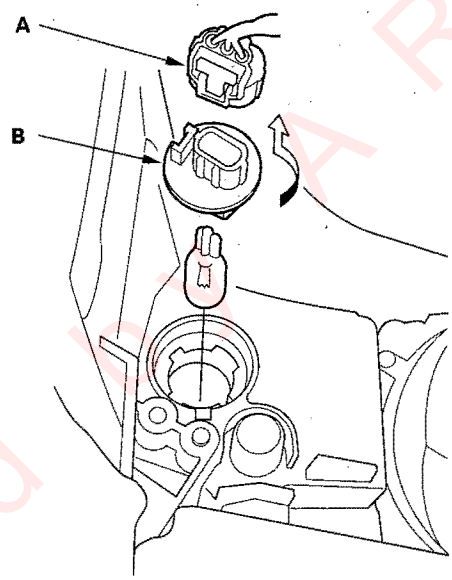

3. Turn the bulb socket (B) 45° counterclockwise to remove it from the headlight housing.
4. Install a new bulb in the reverse order of removel.

Protected by CARFAX

Side Marker Light Replacement

1. Remove the inner fender (see page 20-142) and front fender fairing (see page 20-144), or the trunk side trim panel* (see page 20-68).
2. Carefully push out the light (A) from behind the fender or trunk*.
   * : Rear Side Marker Light

Front Side Marker Light

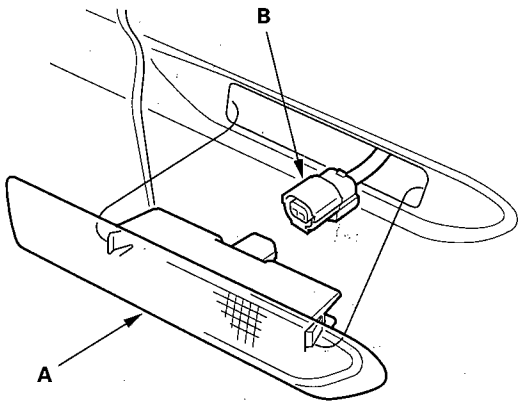

Rear Side Marker Light

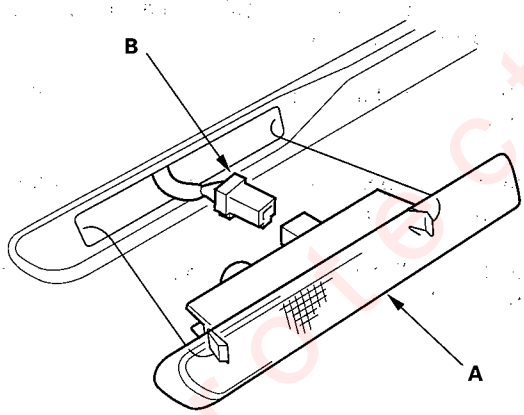

3. Disconnect the 2P connector (B) from the light.
4. Install in the reverse order of removal.

Brake Pedal Position Switch Test

1. Disconnect the 4P connector (A) from the brake pedal position switch (B).

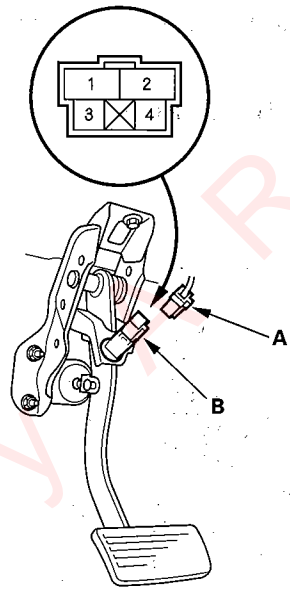

2. Check for continuity between the No. 1 and No. 2 terminals.
   - There should be continuity when the brake pedal is pressed.
   - There should be no continuity when the brake pedal is released.
3. Check for continuity between the No. 3 and No. 4 terminals.
   - There should be no continuity when the brake pedal is pressed.
   - There should be continuity when the brake pedal is released.
4. If necessary, adjust or replace the switch, or adjust the pedal height (see page 19-6).

Protected by AR

Back-up Light Bulb Replacement

1. Open the trunk lid and remove the trunk lid trim (see page 20-69).
2. Disconnect the 2P connector (A) from the back-up light.

   Back-up Light: 21 CP

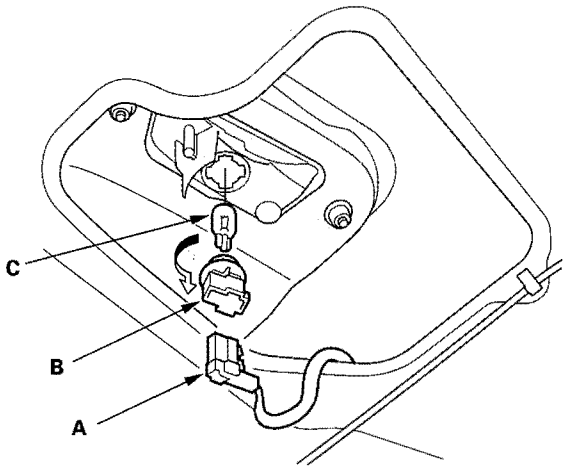

3. Turn thr bulb socket (B) 45° counterclockwise, then remove the bulb (C).
4. Install the bulb in the reverse order of removal.

License Plate Light Replacement

1. Open the trunk lid, and remove the trunk lid trim (see page 20-69).
2. Disconnect the 2P connector (A) from the light.

   License Plate Light: 3 CP

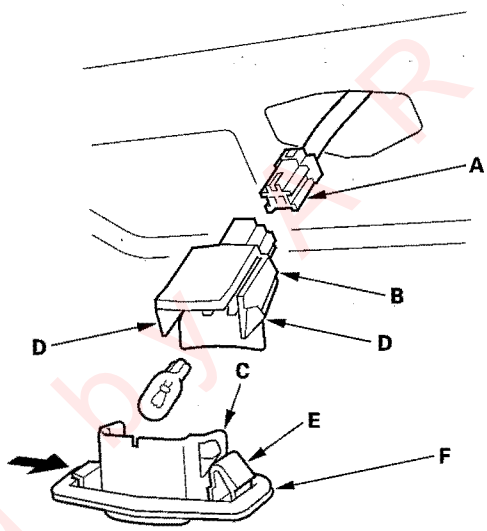

3. Release the bulb socket (B) from the lens (C) by pressing in on the tabs (D).
4. Remove the lens from the trunk lid by pressing on the tab (E).
5. Inspect the gasket (F), if the gasket is distorted or compressed, replace it.
6. Install the license plate light in the reverse order of removal.

Protected by KR

Taillight Replacement

1. Remove the rear bumper (see page 20-120).
2. Open the trunk lid and remove the trunk side trim panel (see page 20-68).
3. Disconnect the connectors (A) from thr taillights (B).

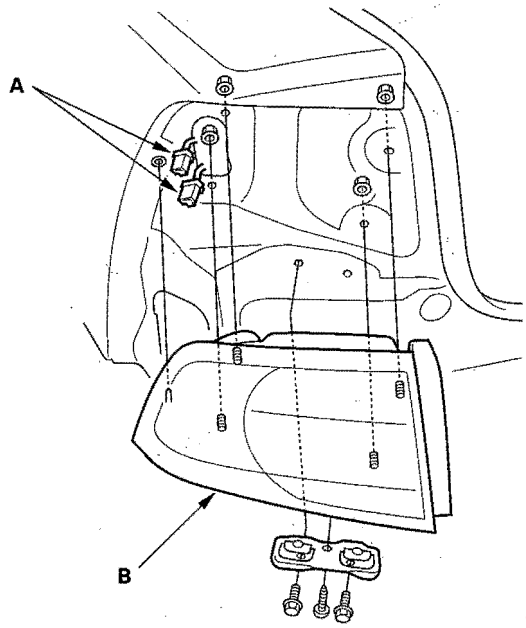

4. Remove the mounting nuts and screws, then remove the taillights.
5. Turn the turn signal light bulb socket 45° counterclockwise to remove the bulb.

Turn Signal Light: 21 W

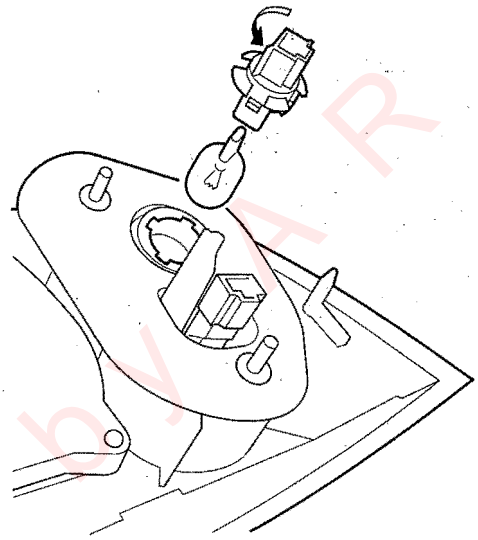

6. Inspect the gasket; replace it if it is distorted or stays compressed.
7. Install the taillight in the reverse order of removal and tighten the nuts to 5 N·m (0.5 kgf·m, 4 ldf·ft).
8. After installing the taillight, run water over it to make sure it does not leak.

Protected by AR

Taillight/Brake Light LED Replacement

1. Remove the taillight (see page 22-193).
2. Remove the gasket (A) from the taillight.

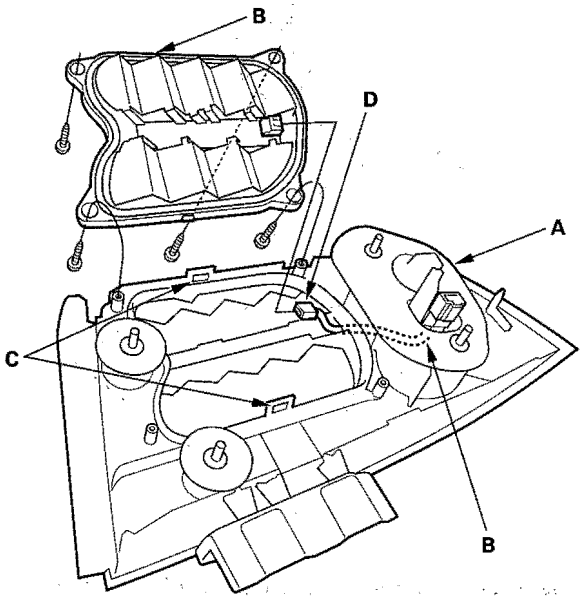

3. Release and uncoil the taillight harness (B) from the taillight housing. Note the installation of the harness.
4. Remove the four screws and release the two tabs (C). Carefully disconnect the connector (D) from the taillight/brake light LED (E).
5. Inspect the gaskets. If the gaskets are distorted or compressed, replace them.
6. Install the new LED in the reverse order of removal.

High Mount Brake Light Replacement

1. Remove the high mount brake light cover (A).

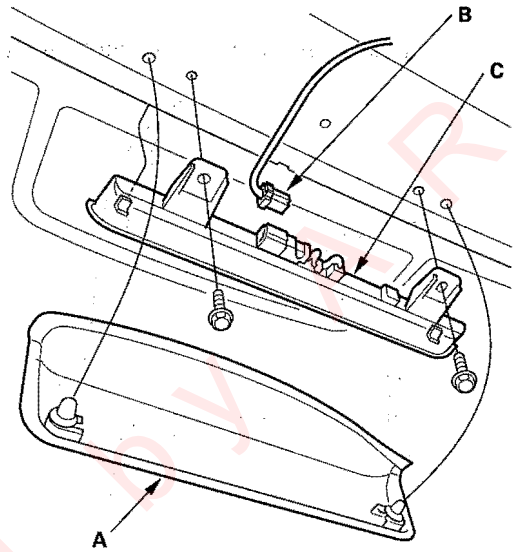

2. Disconnect the 2P connector (B) from the high mount brake light (C).
3. Remove the two bolts and the high mount brake light.
4. Install the light in the reverse order of removal.
5. Clean the rear window and install the high mount brake light cover in the reverse order of removal.

Protected by

Turn Signal/Hazard Flasher

Component Location Index

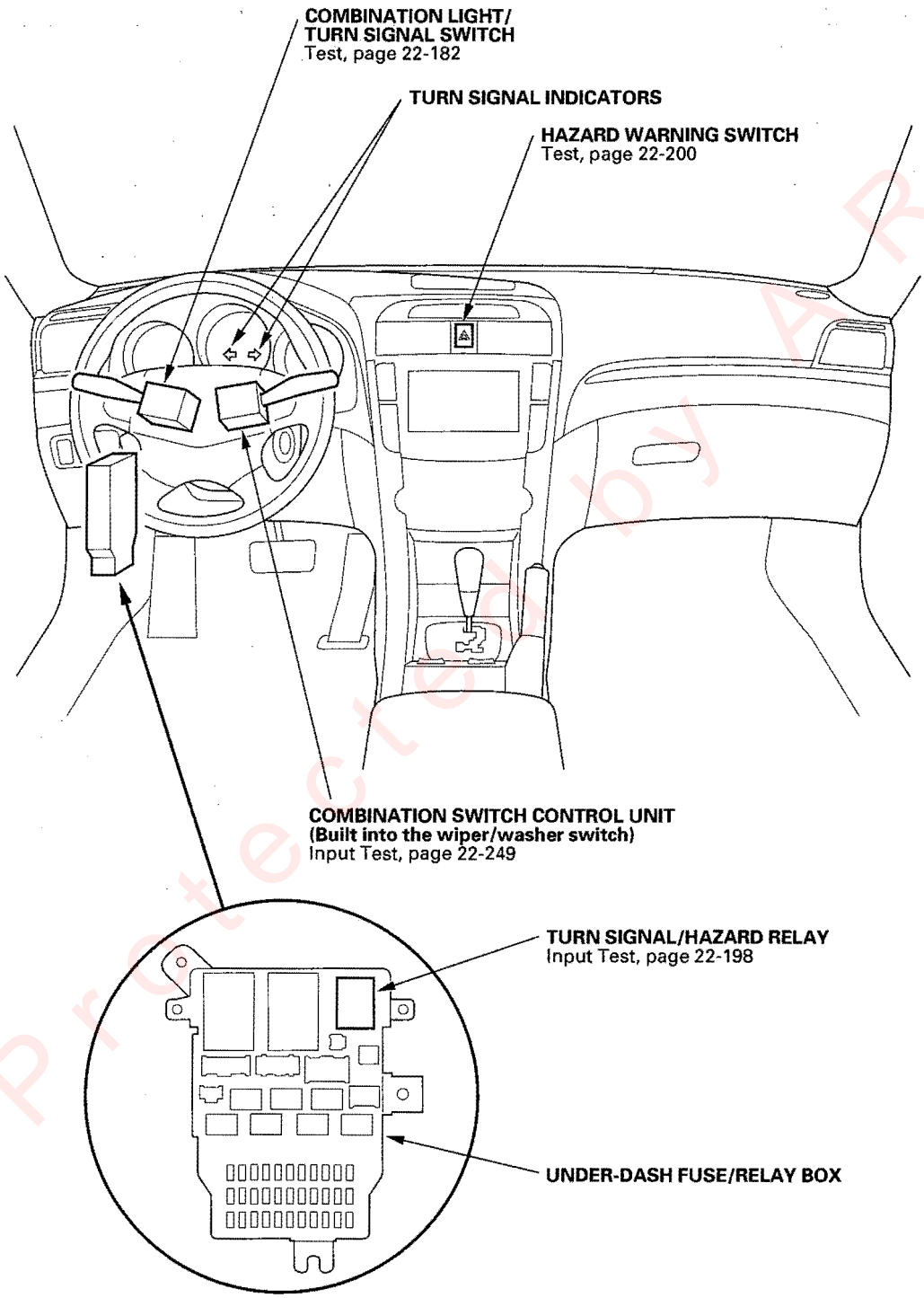

Protected by AR

Turn Signal/Hazard Flasher

Circuit Diagram

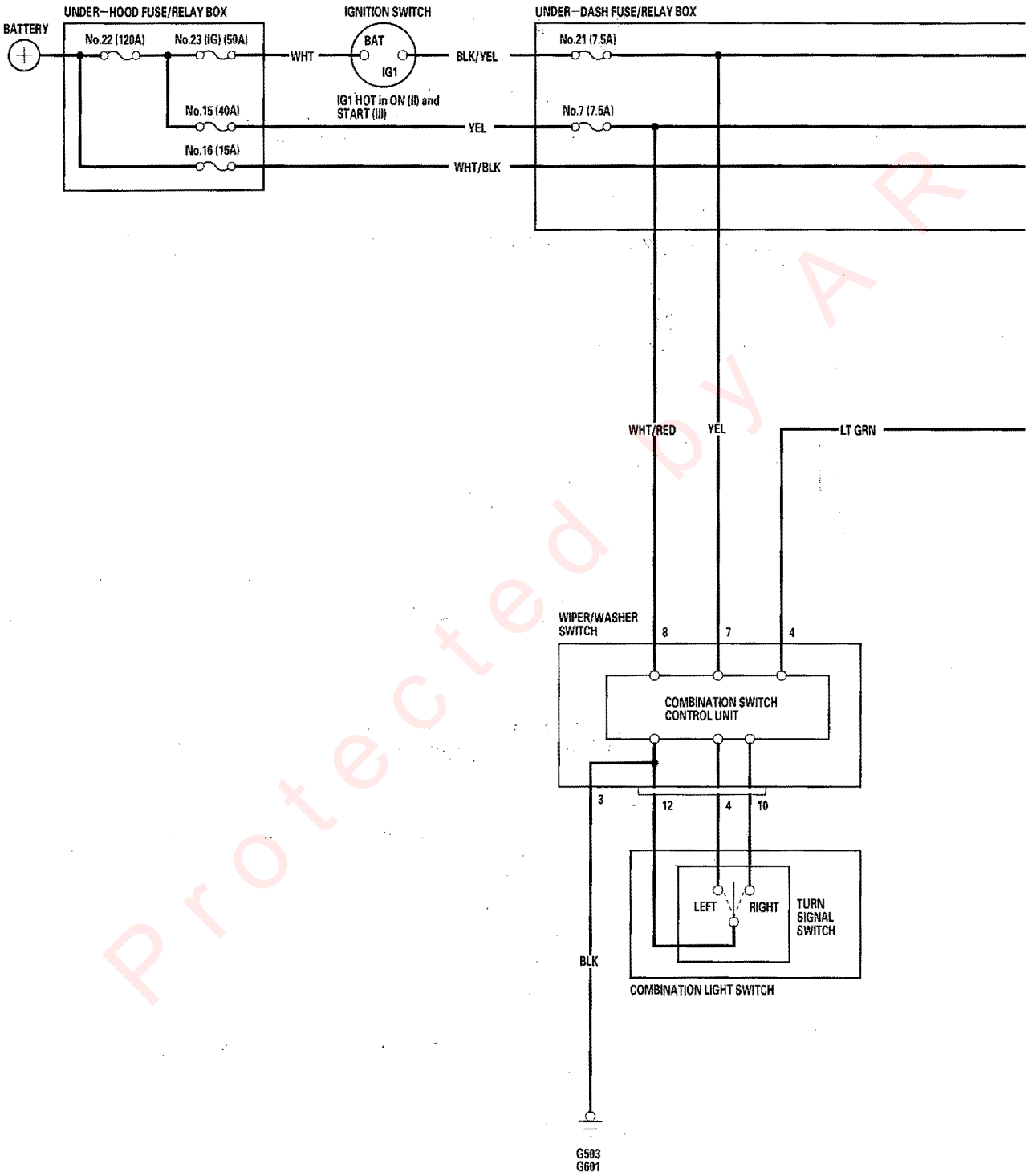

Protected by AR

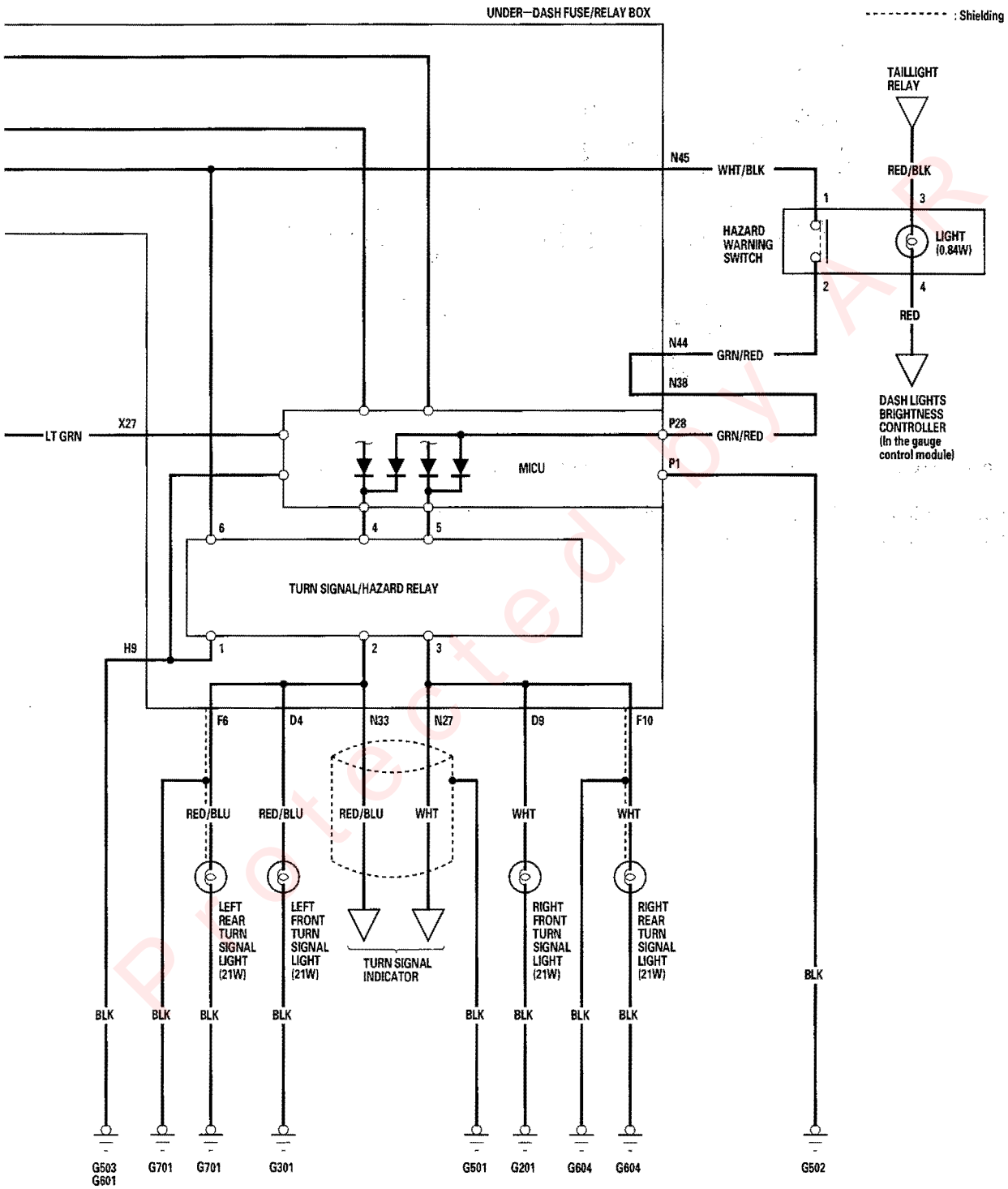

Protected by AR

Turn Signal/Hazard Relay Input Test

1. Remove the turn signal/hazard relay (A) from the under-dash fuse/relay box (B).

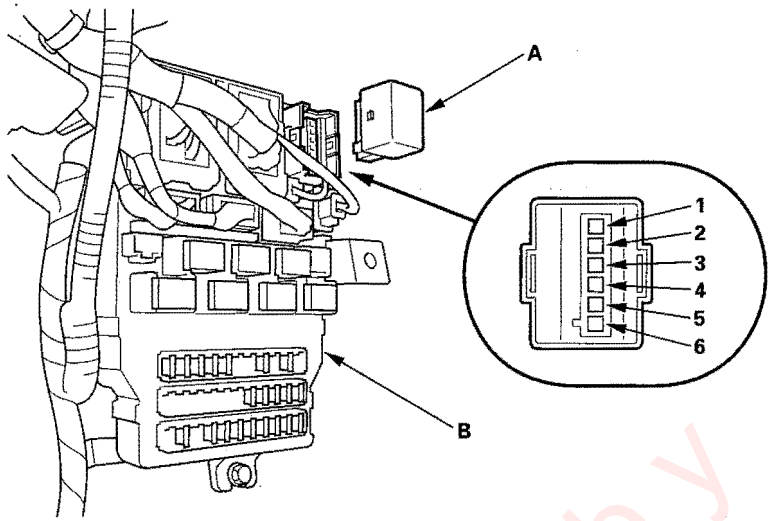

2. Inspect the relay and fuse/relay box socket terminals to be sure they are all making good contact.

   - If the terminals are bent, loose, or corroded, repair them as necessary, and recheck the system.
   - If the terminals look OK, go to step 3.

Protected by AR

3. Make these input tests at the fuse/relay box.

- If any test indicates a problem, find and correct the cause, then recheck the system.
- If all the input tests prove OK, the turn signal/hazard relay must be faulty; replace it.

Cavity	Teat condition	Test: Desired result	Possible cause if result is not obtained
6	Under all conditions	Check for votage to ground: There should be battery voltage.	• Blown No. 16 (15A) fuse in the under-hood fuse/relay box • Faulty under-dash fuse/relay box • An open in the wire
1	Under all conditions	Check for continuity to ground: There should be continuity.	• Poor ground (G503, G601) • Faulty under-dash fuse/relay box • An open in the wire
2	Connect the No. 6 terminal to the No. 2 terminal with a jumper wire.	Check the turn signal lights operation. The left turn signal lights and indicator should come on.	• Blown bulb • Poor ground (G301, G701) • An open in the wire
3	Connect the No. 6 terminal to the No. 3 terminal with a jumper wire.	Check the turn signal lights operation. The right turn signal lights and indicator should come on.	• Blown bulb • Poor ground (G201, G604) • An open in the wire
4	Ignition switch ON (II) and turn signal switch in Left position.	Check for voltage to ground. There should be about 10 V.	• Poor ground (G503, G601) • Faulty turn signal switch • Faulty under-dash fuse/relay box • An open in the wire • Faulty combination switch control unit* • Faulty MICU*
5	Igniton switch ON (II) and turn signal switch in Right position.	Check for voltage to ground. There should be about 10 V.	
4	Hazard warning switch ON	Check for voltage to ground. There should be about 10 V.	• Poor ground (G503, G601) • Blown No. 16 (15A) fuse in the under-hood fuse/relay box • Faulty under-dash fuse/relay box • Faulty hazard warning switch • An open in the wire • Faulty MICU*
5		Check for voltage to ground. There should be about 10 V.	

* : Go to the B-CAN System Diagnosis Test Mode A (see page 22-108).

Protected by AR

Hazard Warning Switch Test

1. Remove the upper panel (see page 20-83).
2. Disconnect the 5P connector (A) from the hazard warning switch.

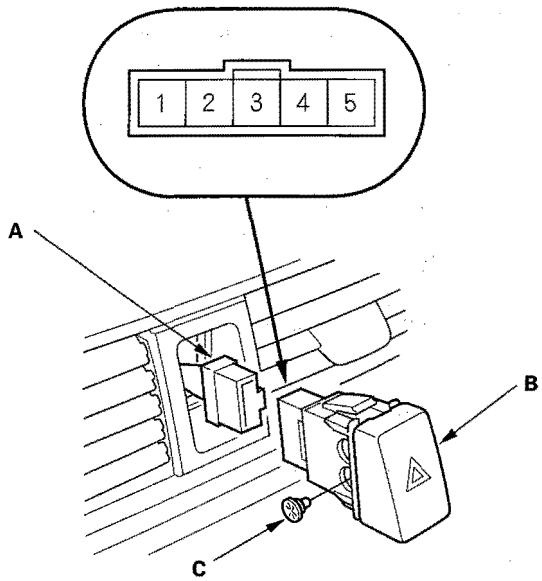

3. Remove the two mounting screws, then remove the hazard warning switch (B) from behind the upper panel.
4. Check for continuity between the terminals in each switch position according to the table.

Terminal / Position	1	2	3		4
OFF			○	⏚	○
ON	○	○	○	⏚	○

5. If the continuity is not as specified, replace the bulb (C) or the hazard warning switch.

Protected by AR

Dash Lights Brightness Controller

Circuit Diagram

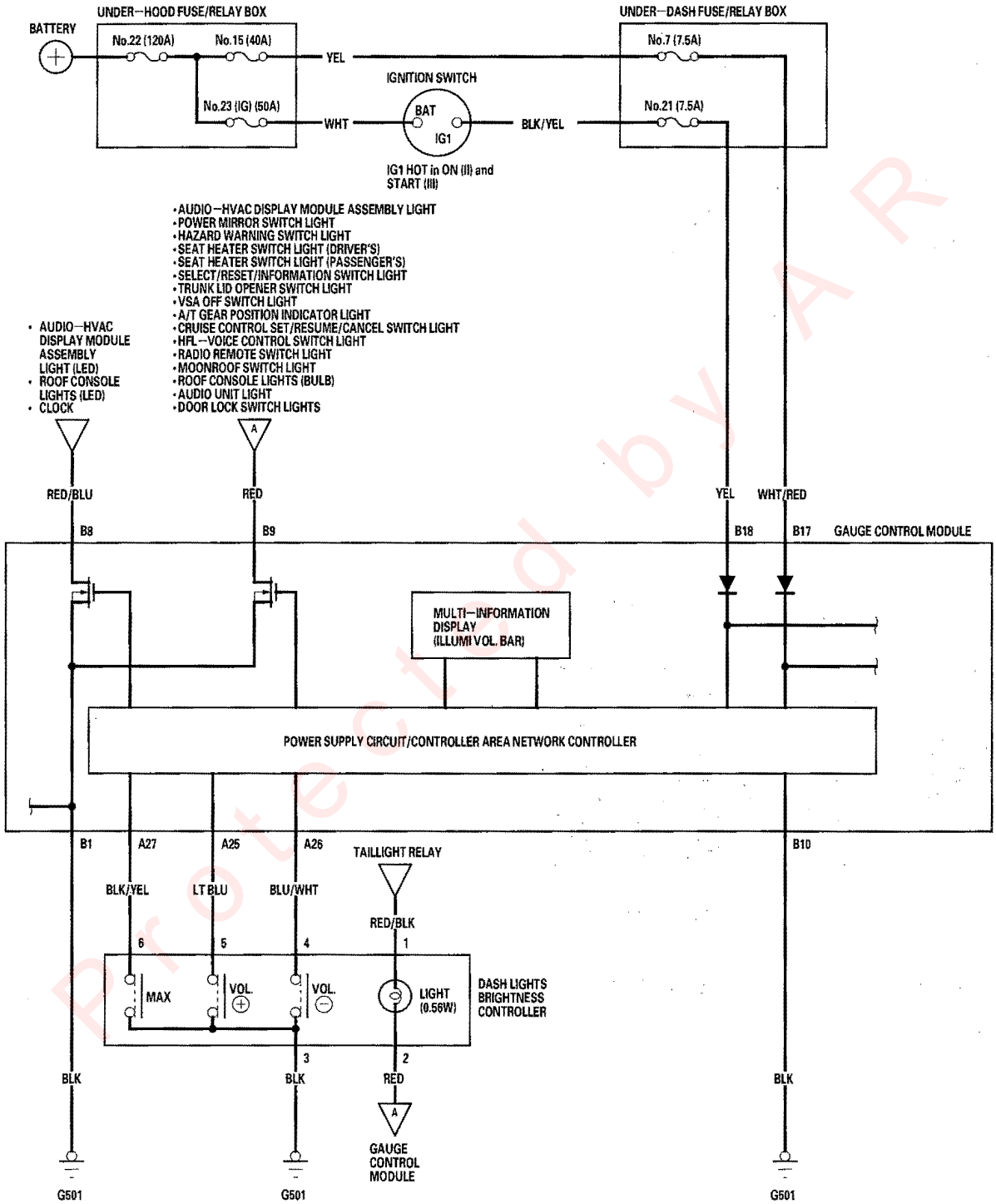

Protected by AR

Dash Lights Brightness Controller Test/Replacement

1. Remove the instrument panel (see page 20-82).
2. Disconnect the 6P connector (A) from the dash lights brightness controller (B).

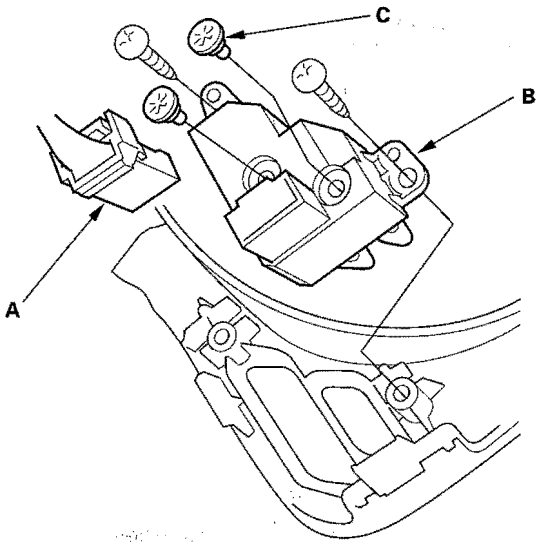

3. Remove the two screws and the dash lights brightness controller.
4. Check for continuity between the terminals in each switch position according to the table.

Terminal / Position	3	4	5	6	1		2
ILLUMI (+)	○		○		○	○	○
ILLUMI (−)	○	○			○	○	○
MAX	○			○	○	○	○

5. If the continuity is not as specified, replace the switch.
6. If the bulb(s) (C) are faulty, replace the bulb(s).

Protected by AR

Interior Lights

Component Location Index

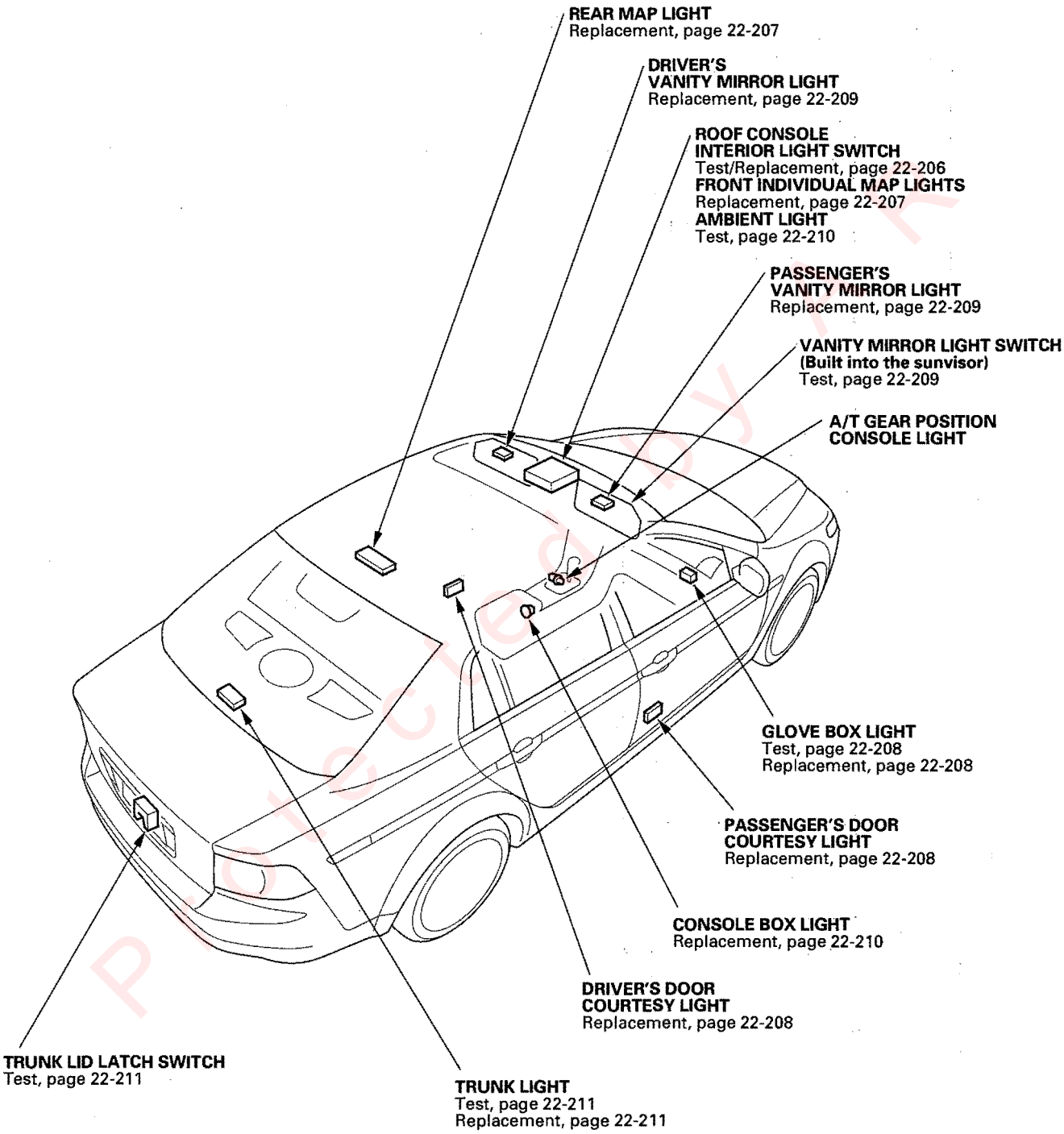

Protected by FR

Circuit Diagram

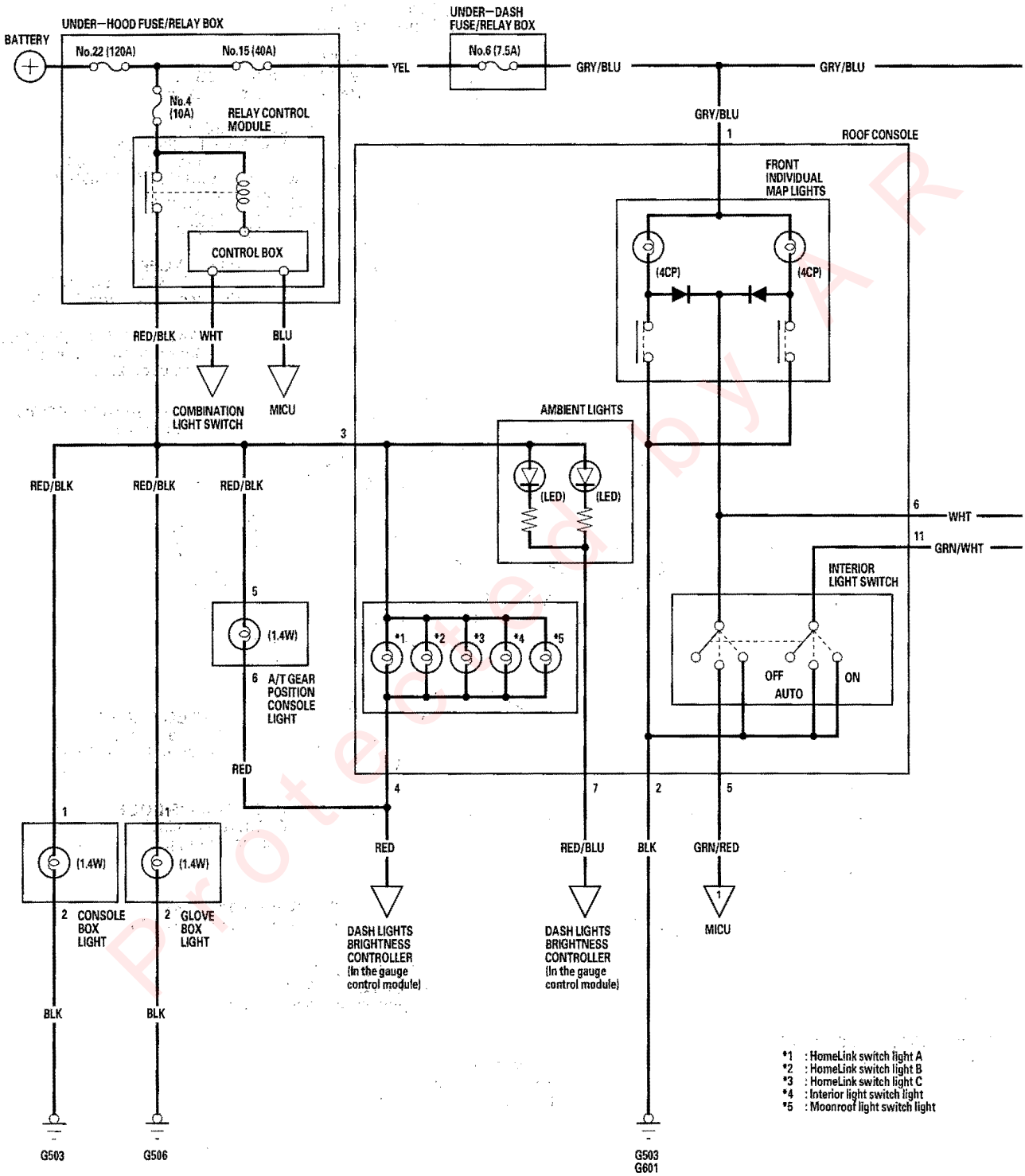

Protected by AR

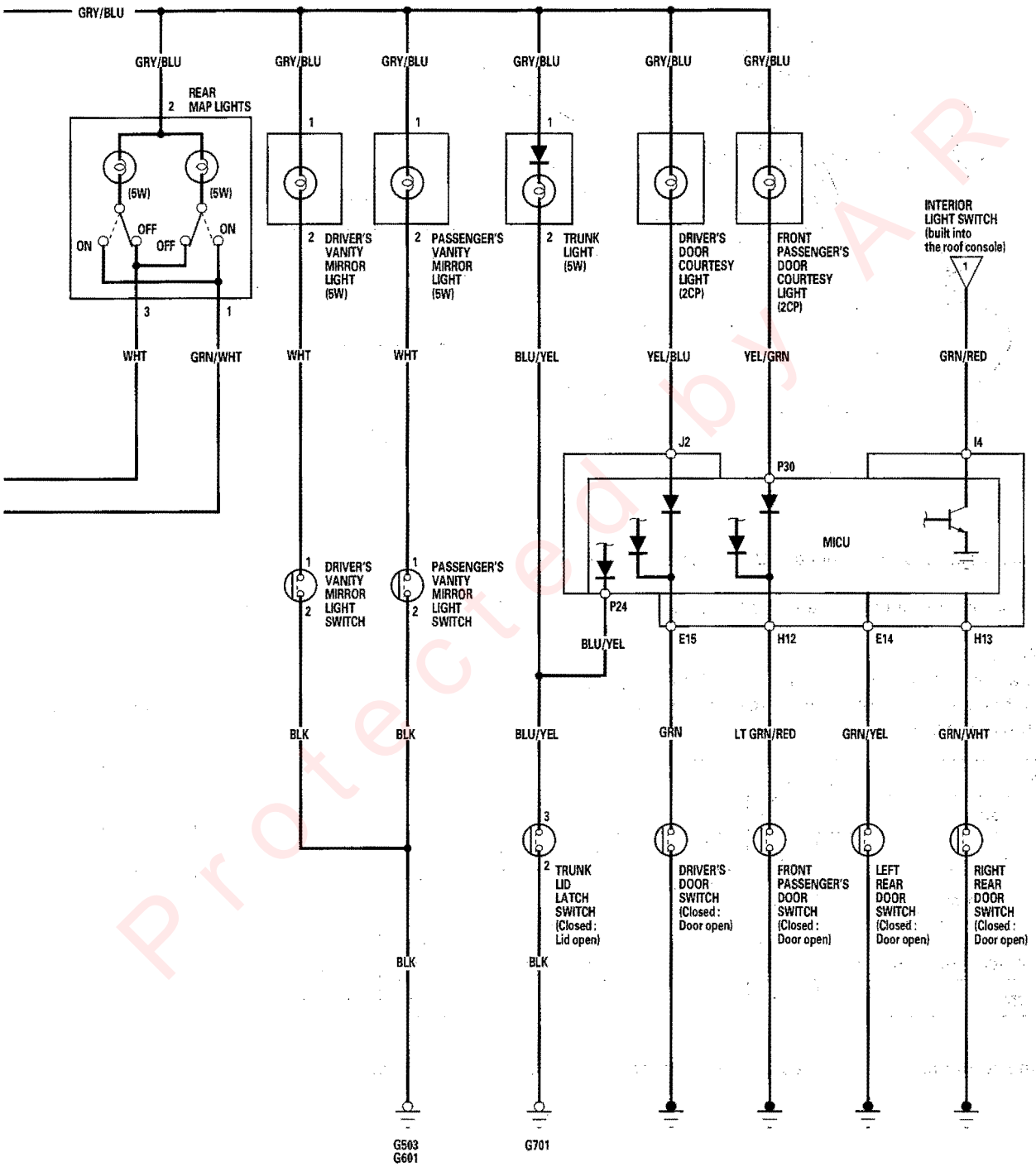

Protected by AR

Interior Light Switch Test/Replacement

1. Remove the moonroof switch (see page 22-290).
2. Carefully pull down the roof console (A).

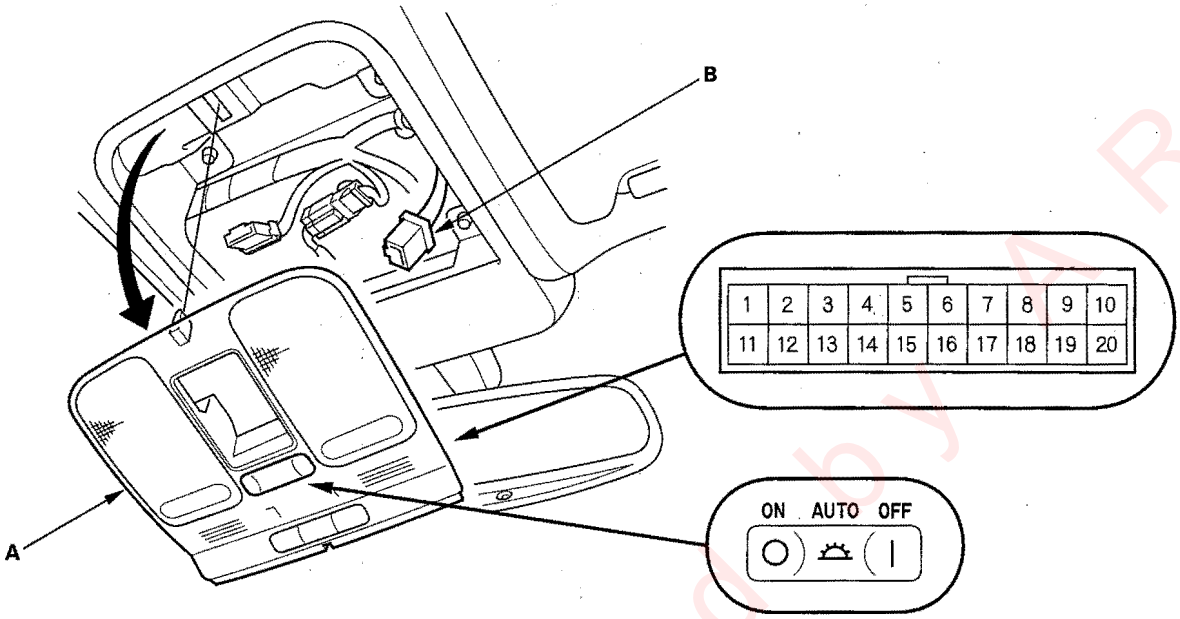

3. Disconnect the 20P connector (B) from the roof console.
4. Check for continuity between the terminals in each interior light switch position according to the table.

NOTE:
- Before testing, check the front individual map light bulb(s).
- When check for continuity across the diode, use the diode setting (⟶|⟵) on the digital volt/ohm meter to check the diode bias.

Position \ Terminal		1		2	5	6	11
OFF	○	○	○ ▶			○	
OFF (Front map light switch ON)	○	○	○ ▶	○		○	
Middle (AUTO) position	☼	○	○		○	○	
ON	—	○	○	○		○	○

5. If the continuity is not as specified, replace the roof console as an assembly.

Protected by AR

Front Individual Map Light Replacement

1. Carefully pry off the lens (A) with a small screwdriver.

Front Map Light: 4 CP x 2

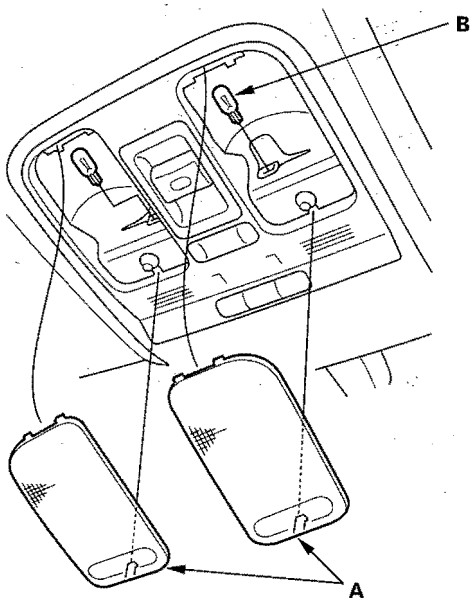

2. Check the bulb(s) (B). If the bulb is OK, but there is a malfunction, check the interior light switch (see page 22-206).

Rear Map Light Replacement

1. Carefully pry off the lens (A) with a small screwdriver.

Rear Map Light: 5 W x 2

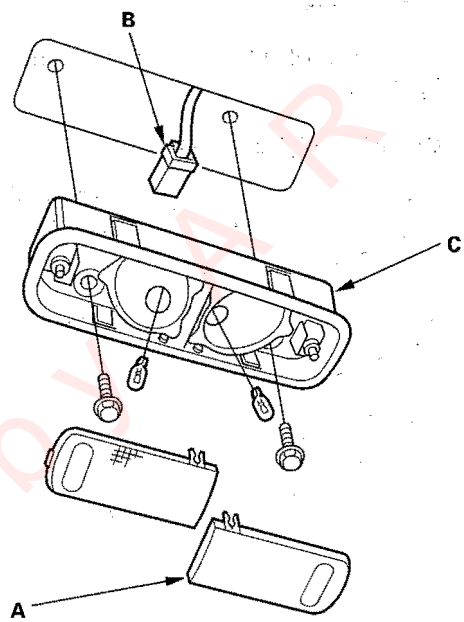

2. Remove the two mounting bolts.
3. Disconnect the 3P connector (B) from the rear map light (C).
4. Install in the reverse order of removal.

Protected by MR

Glove Box Light Test/Replacement

1. Remove the glove box stops and damper (see page 20-84).
2. Carefully pry the glove box light out of the glove box housing.
3. Twist the socket (A) to remove it from the glove box light (B).

Glove Box Light: 1.4 W

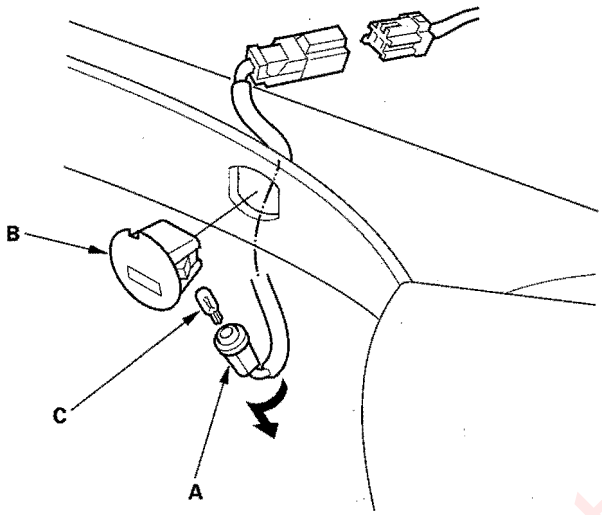

4. Remove the bulb (C) from the socket.
5. Install in the reverse order of removal.

Courtesy Light Replacement

1. Carefully pry off the lens (A) with a small screwdriver.

Courtesy Light: 2 CP

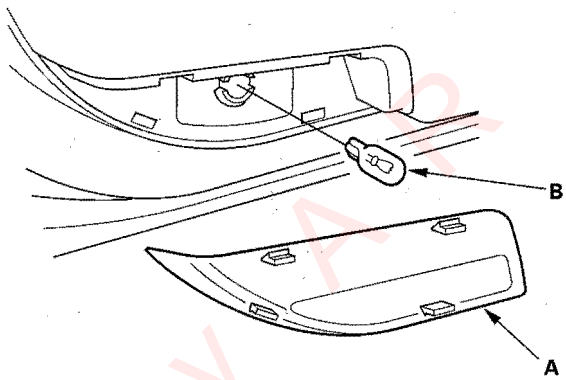

2. Remove the bulb (B) from the socket.
3. Install in the reverse order of removal.

Protected by AR

Vanity Mirror Light Switch Test

1. Remove the sunvisor (see page 20-70).
2. Disconnect the 2P connector (A) from the sunvisor (B).

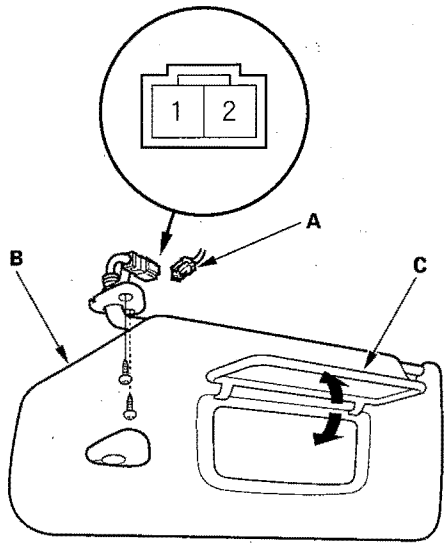

3. Check for continuity between the No. 1 and No. 2 terminals.
   - With the vanity mirror cover (C) opened, there should be continuity.
   - With the vanity mirror cover (C) closed, there should be no continuity.
4. If the continuity check is not as specified, replace the sunvisor.

Vanity Mirror Light Replacement

1. Wrap the tip of the screwdriver in tape.
2. Carefully slide the screwdriver between the metal mounting ring (A) and the headliner until the tip of the screwdriver is resting against the lens locking tab.

Vanity Mirror Light: 5 W

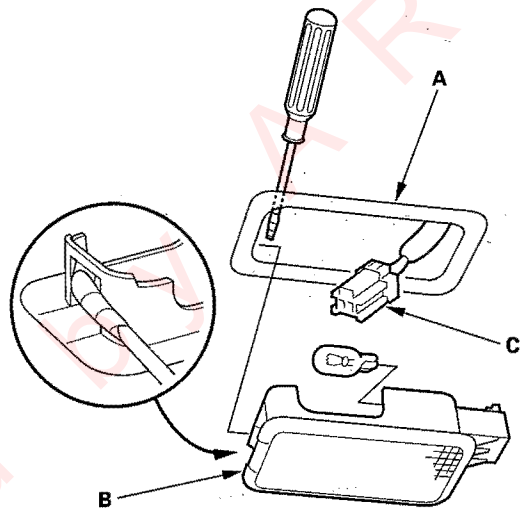

NOTE: Right side is shown. Left side is symmetrical.

3. Rotate the screwdriver handle toward the center of the vehicle while pressing the tip of the screwdriver against the locking tab to release the lens.
4. Pull the lens (B) down.
5. Disconnect the 2P connector (C) from the light.
6. Install in the reverse order of removal.

Protected by AR

Console Box Light Replacement

1. Remove the center console (see page 20-77).
2. Disconnect the 2P connector (A) from the console box light.

   Console Box Light: 1.4 W

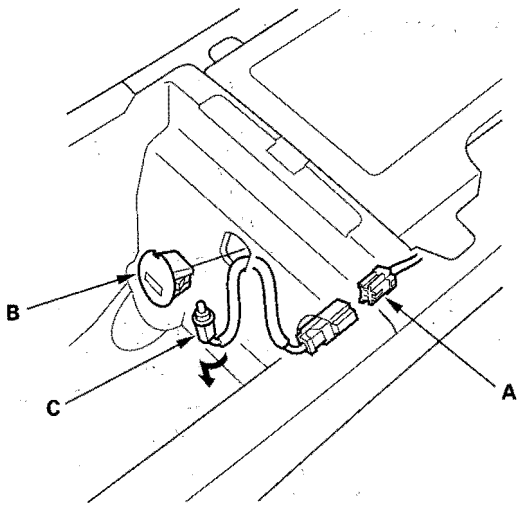

3. Carefully pry out the console box light lens (B).
4. Turn the bulb socket (C) 45° counterclockwise to remove it from the lens.

   NOTE: If only replace the lens, it is not necessary to remove the center console box.

Ambient Light Test

1. Remove the roof console and disconnect the 20P connector (see page 22-206).
2. Connect the roof console connector terminal No. 3 to battery power and terminal No. 7 to body ground. The ambient lights (A) should turn on. If they do not turn on, replace the roof console.

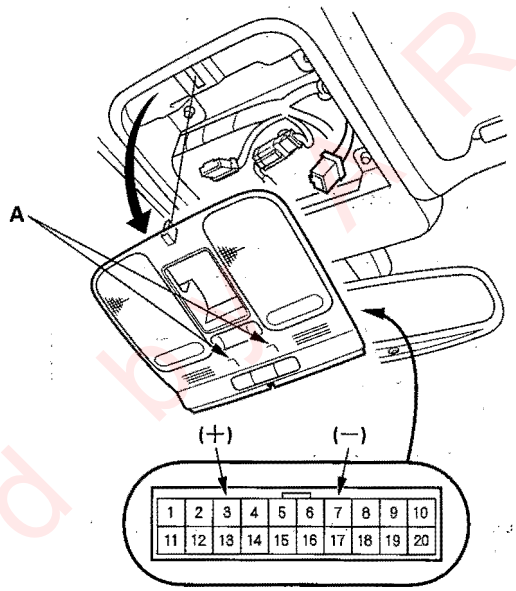

Protected by

Trunk Light Test/Replacement

1. Open the trunk lid.
2. Carefully pry out the trunk light (A).

   Trunk Light: 5 W

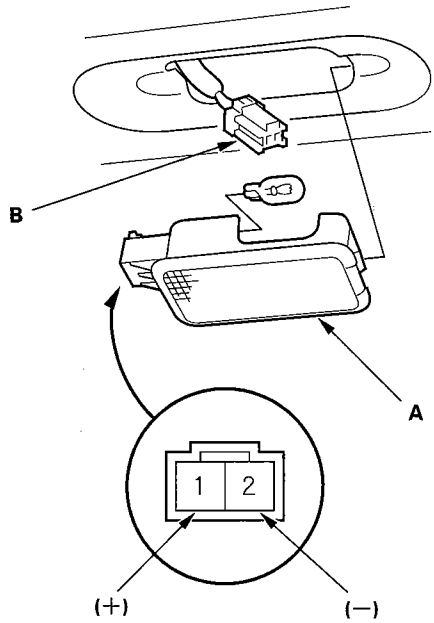

3. Disconnect the 2P connector (B) from the light.
4. Check for continuity between the No. 1 (+) and No. 2 (−) terminals. There should be continuity. If there is no continuity, check the bulb (C). If the bulb is OK, replace the trunk light.

Trunk Lid Latch Switch Test

1. Open the trunk lid and remove the trunk lid trim (see page 20-69).
2. Disconnect the 3P connector (A) from the trunk lid latch (B).

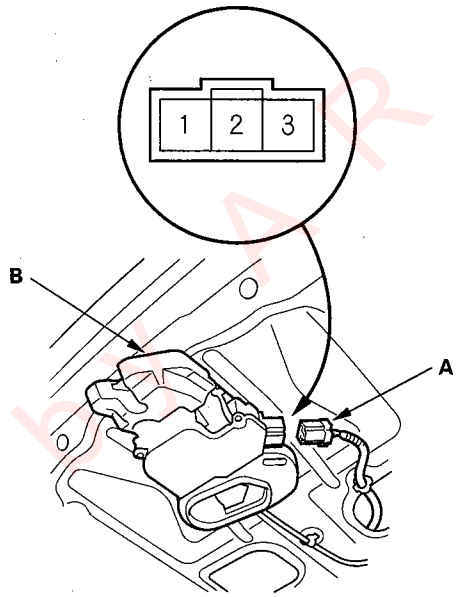

3. Check for continuity between the No. 2 and No. 3 terminals.

   - There should be continuity with the trunk lid latch unlatched (trunk lid open).
   - There should be no continuity with the trunk lid latch latched (trunk lid closed).

4. If the continuity is not as specified, replace the trunk lid latch switch.

Protected by AR

Entry Light Control System

Component Location Index

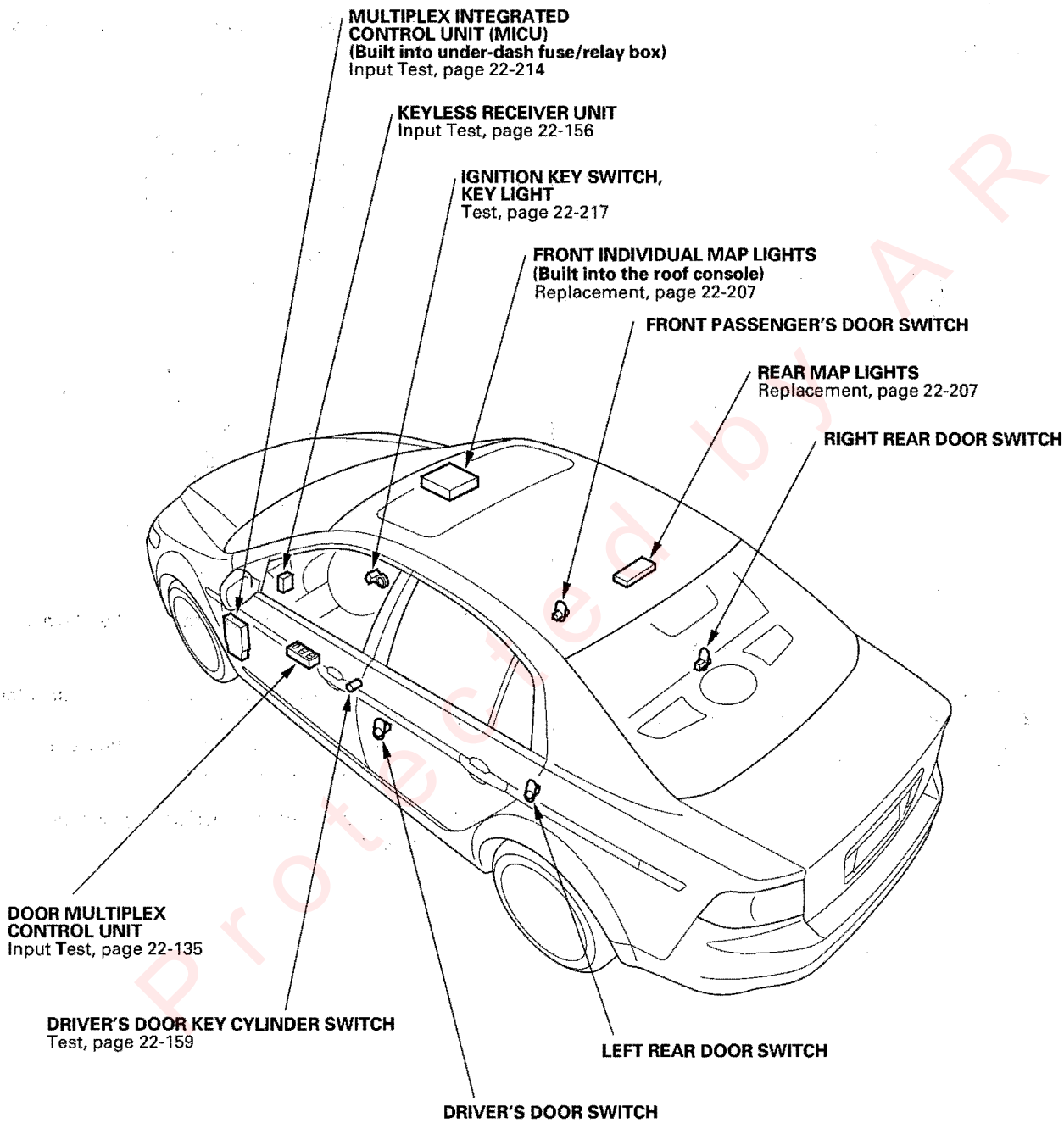

Protected by AR

Circuit Diagram

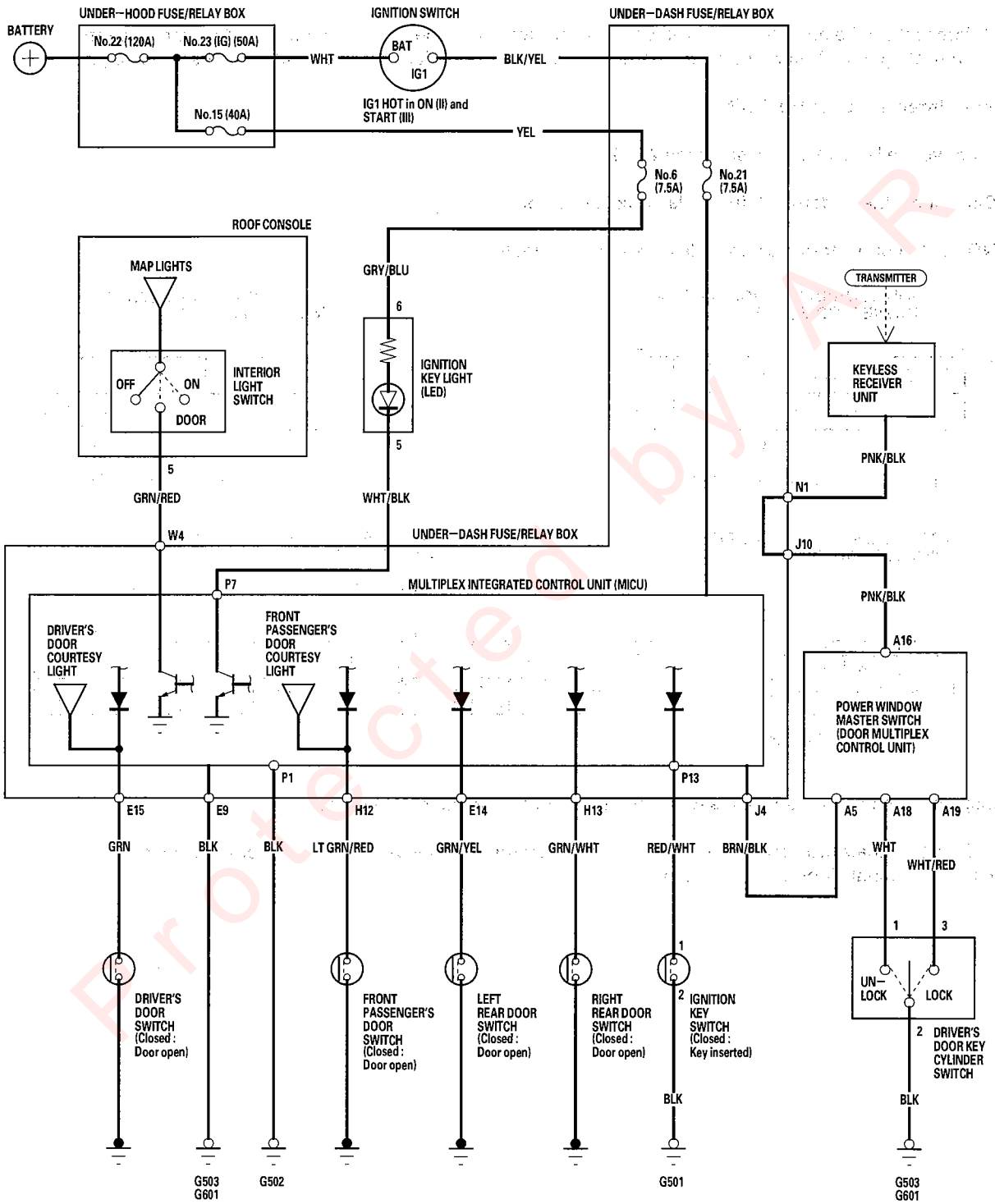

Protected by AR

Control Unit Input Test

NOTE: Make sure the ignition switch is OFF before disconnecting the under-dash fuse/relay box connectors.

1. Before testing the entry light control functions, troubleshoot the multiplex integrated control system using B-CAN System Diagnosis Test Mode A (see page 22-108), and the keyless receiver unit input test (see page 22-156).

Multiplex Integrated Control Unit

2. Remove the left kick panel (see page 20-62).
3. Disconnect the under-dash fuse/relay box connectors.

   NOTE: All connectors are wire side of female terminals.

UNDER-DASH FUSE/RELAY BOX CONNECTOR E (16P)

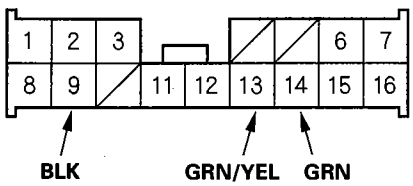

UNDER-DASH FUSE/RELAY BOX CONNECTOR H (14P)

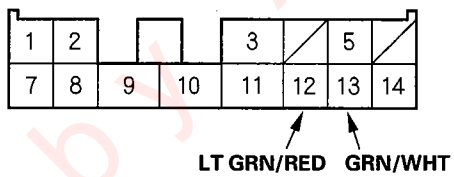

UNDER-DASH FUSE/RELAY BOX CONNECTOR W (5P)

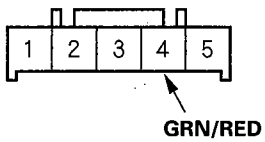

UNDER-DASH FUSE/RELAY BOX CONNECTOR P (30P)

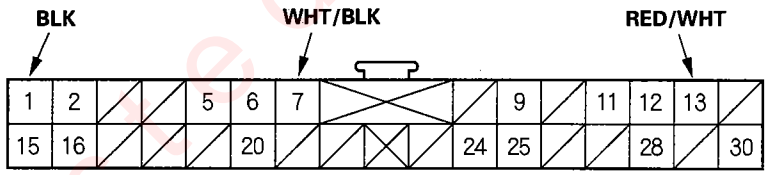

4. Inspect the connector terminals to be sure they are all making good contact.

   - If the terminals are bent, loose or corroded, repair them as necessary, and recheck the system.
   - If the terminals look OK, go to step 5.

Protected by AR

5. With the connectors still disconnected, make these input tests at the connector.

   - If any test indicates a problem, find and correct the cause, the recheck the system.
   - If all the input tests prove OK, go to step 6.

Cavity	Wire	Test condition	Test: Desired result	Possible cause if result is not obtained
P1	BLK	Under all conditions	Check for continuity to ground: There should be continuity.	• Poor ground (G502) • An open in the wire
E9	BLK	Under all conditions	Check for continuity to ground: There should be continutiy.	• Poor ground (G503, G601) • An open in the wire
P7	WHT/BLK	Under all conditions	Attach to ground: Ignition key light should come on.	• Blown No. 6 (7.5A) fuse in the under-dash fuse/relay box • Faulty ignition key light (LED) • An open in the wire
W4	GRN/RED	Interior light switch in middle (DOOR) position	Attach to ground: Front and rear map light(s) should come on.	• Blown No. 6 (7.5A) fuse in the under-dash fuse/relay box • Blown bulb • Faulty map light • An open in the wire

6. Reconnect the connectors to the under-dash fuse/relay box. Turn the ignition switch ON (II), and make these input tests at the appropriate connectors on the under-dash fuse/relay box.

   - If any test indicates a problem, find and correct the cause, then recheck the system.
   - If all the input tests prove OK, go to step 7.

Cavity	Wire	Test condition	Test: Desired result	Possible cause if result is not obtained
E15	GRN	Driver's door open	Check for voltage to ground: There should be 1 V or less.	• Faulty driver's door switch • An open in the wire
		Driver's door closed	Check for voltage to ground: There should be 5 V or more.	• Faulty driver's door switch • Short to ground
H12	LT GRN/RED	Front passenger's door open	Check for voltage to ground: There should be 1 V or less.	• Faulty front passenger's door switch • An open in the wire
		Front passenger's door closed	Check for voltage to ground: There should be 5 V or more.	• Faulty front passenger's door switch • Short to ground
E14	GRN/YEL	Left rear door open	Check for voltage to ground: There should be 1 V or less.	• Faulty left rear door switch • An open in the wire
		Left rear door closed	Check for voltage to ground: There should be 5 V or more.	• Faulty left rear door switch • Short to ground
H13	GRN/WHT	Right rear door open	Check for voltage to ground: There should be 1 V or less.	• Faulty right rear door switch • An open in the wire
		Right rear door closed	Check for voltage to ground: There should be 5 V or more.	• Faulty right rear door switch • Short to ground
P13	RED/WHT	Ignition key inserted into the ignition switch	Check for voltage to ground: There should be 1 V or less.	• Poor ground (G501) • Faulty ignition key switch • An open in the wire
		Ignition switch OFF and the ignition key removed from the ignition switch	Check for voltage to ground: There should be 5 V or more.	• Faulty ignition key switch • Short to ground

(cont'd)

Control Unit Input Test (cont'd)

Door Multiplex Control Unit

7. Turn the ignition switch OFF.
8. Remove the driver's door panel (see page 20-7).
9. Disconnect the 22P connector from the door multiplex control unit.
10. Inspect the connector and socket terminals to be sure they are all making good contact.
    - If the terminals are bent, loose or corroded, repair them as necessary, and recheck the system.
    - If the terminals look OK, go to step 11.

DOOR MULTIPLEX CONTROL UNIT CONNECTOR A (22P)

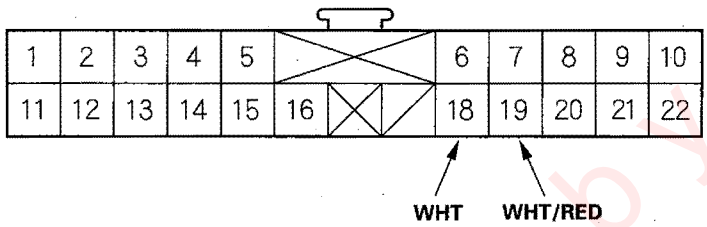

Wire side of female terminals

11. Reconnect the connector to the door multiplex control unit. Turn the ignition switch ON (II), and make these input tests at the appropriate connector.
    - If any test indicates a problem, find and correct the cause, then recheck the system.
    - If all the input tests prove OK, the MICU must be faulty; replace the under-dash fuse/relay box.

Cavity	Wire	Test condition	Test: Desired result	Possible cause if result is not obtained
A19	WHT/RED	Driver's door key cylinder switch in LOCK	Check for voltage to ground: There should be 1 V or less.	• Faulty driver's door key cylinder switch • Poor ground (G503, G601) • An open in the wire • Short to ground
		Driver's door key cylinder switch in the neutral position	Check for voltage to ground: There should be 5 V or more.	
		Driver's door key cylinder switch in UNLOCK	Check for voltage to ground: There should be 5 V or more.	
A18	WHT	Driver's door key cylinder switch in UNLOCK	Check for voltage to ground: There should be 1 V or less.	• Faulty driver's door key cylinder switch • Poor ground (G503, G601) • An open in the wire • Short to ground
		Driver's door key cylinder switch in the neutral position	Check for voltage to ground: There should be 5 V or more.	
		Driver's door key cylinder switch in LOCK	Check for voltage to ground: There should be 5 V or more.	

Printed by AR

Ignition Key Switch Test

1. Remove the steering column upper and lower covers (see page 17-24).
2. Disconnect the 6P connector.

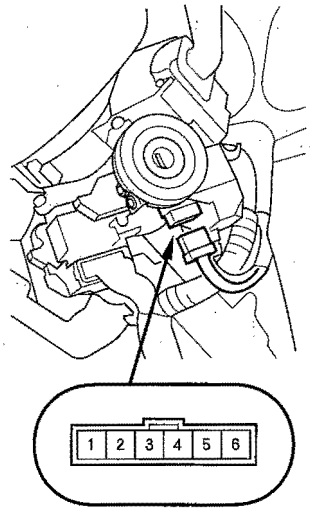

3. Check for continuity between the No. 1 and No. 2 terminals.
   - There should be continuity with the key in the ignition switch.
   - There should be no continuity with the key removed.
4. If the continuity is not as specfied, replace the ignition switch.

Ignition Key Light Test

1. Remove the steering column upper and lower covers (see page 17-24).
2. Disconnect the 6P connector (A).

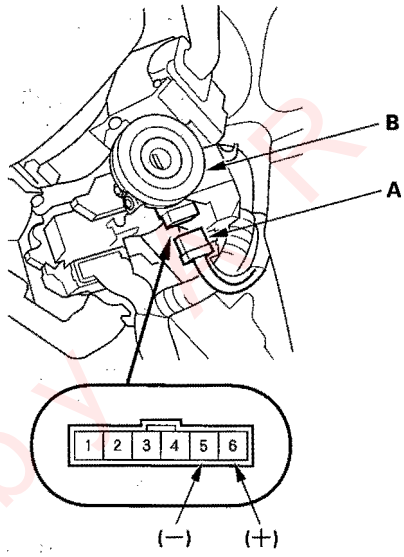

3. The LED (B) should come on when power is connected to the No. 6 terminal and ground is connected to No. 5 terminal.
4. If the LED does not come on, replace the ignition switch.

Protected by

HomeLink Remote Control System

Circuit Diagram

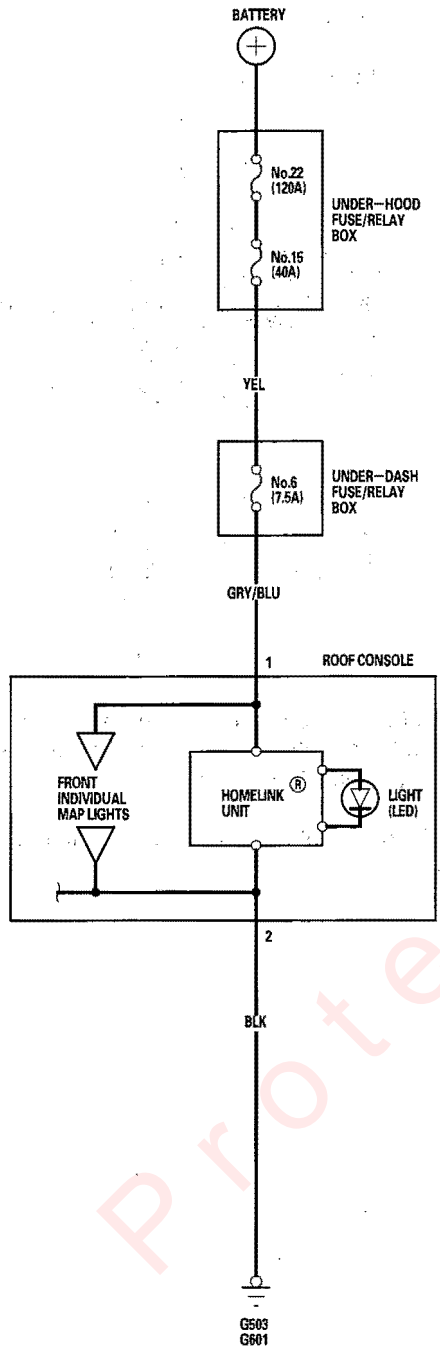

Test

Turn on the front individual map lights.

- If the front individual map lights come on, the HomeLink's power and ground circuits are OK. If the HomeLink will not open the customer's garage door, check that the HomeLink is programmed properly (see the owner's manual) or call HomeLink at 800-355-3515. On the internet, go to www. homelink. jcl. com.
- If the front individual map lights do not come on, check for these problems:
  - a blown No. 6 (7.5A) fuse in the under-dash fuse/relay box.
  - a faulty under-dash fuse/relay box.
  - an open in the GRY/BLU wire between the under-dash fuse/relay box and roof console.
  - an open in the BLK wire between the roof console and G503, G601.

Protected by MR

Component Location Index

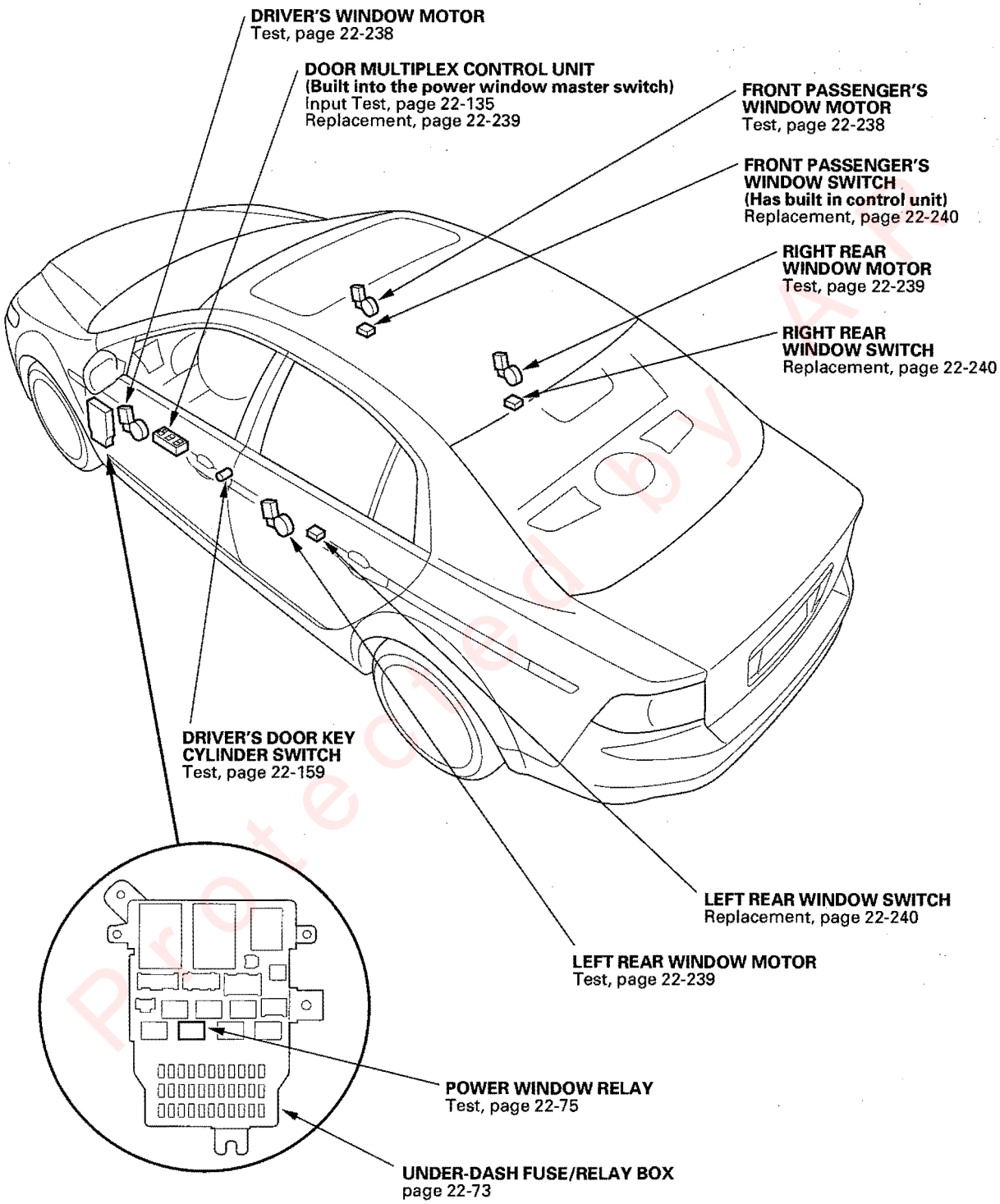

Protected by AP

System Description

Anti-pinch Power Window Operation

The system is composed of the power window master switch, front passenger's power window switch, front passenger's power window control unit and the driver's and front passenger's power window motors.

Driver's Window
The driver's power window motor incorporates a pulser which generates pulses during the motor's operation and sends the pulses to the driver's power window control unit. As soon as the power window control unit detects no pulses from the pulser, the driver's power window control unit makes the power window motor stop and reverse. This is to prevent pinching your hand or fingers during auto-up operation.

Front Passenger's Window
The front passenger's power window motor incorporates a pulser which generates pulses during the motor's operation and sends the pulses to the front passenger's power window control unit. As soon as the power window control unit detects no pulses from the pulser, the front passenger's power window control unit makes the power window motor stop and reverse. This is to prevent pinching your hand or fingers during auto-up operation.

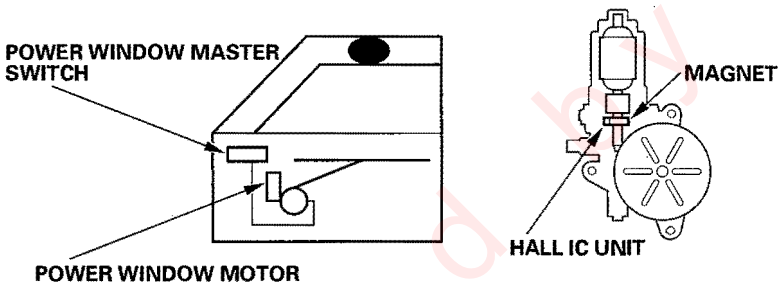

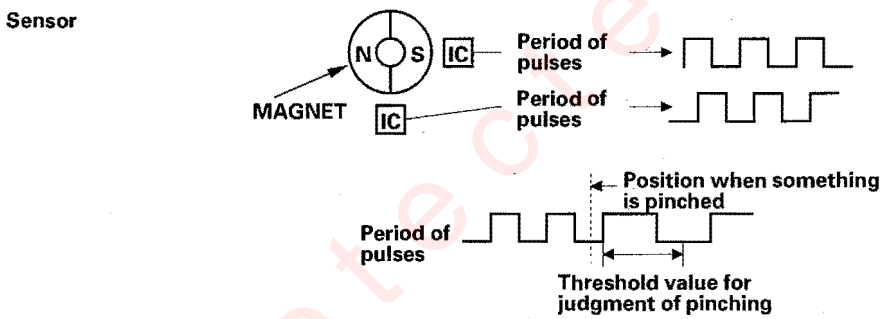

Key Cylinder Operation
With the key inserted in the driver's door key cylinder, turn the key a second time and hold it within 15 seconds to operate the windows and moonroof (clockwise to open, counterclockwise to close). The windows and moonroof stop moving when the key is released. The anti-pinch operation is not active when closing the windows and moonroof with the key cylinder.

Keyless Operation
By pressing the UNLOCK button of the keyless transmitter a second time and hold within 15 seconds, the windows and moonroof open. The windows and moonroof stop moving when the UNLOCK button is released. The windows do not close with the LOCK button.

Protected by R

Resetting the Power Window Control Unit

Resetting the driver's or front passenger's power window is required when any of the following have occurred:

- Power window regulator replacement or repair
- Power window motor replacement or repair
- Window run channel replacement or repair
- Door glass replacement or repair
- Power is removed from a power window control unit while the power window timer is ON.

Using the HDS

1. Connect the Honda Diagnostic System (HDS) to the vehicle's DLC.
2. Turn the ignition switch ON (II), then enter the vehicle's VIN and mileage at the prompts.
3. Select "Body Electrical" from the "System Selection" menu.
4. From the "Body Electrical System Select" menu, select "Power Windows".
5. From the "Mode" menu, select "Adjustments".
6. From the "Adjustment" menu, select "Window P Reset" for driver's side (passenger's side) window.
7. Follow the prompts on the screen.
8. Confirm that the power window control unit is reset by using the driver's (passenger's) window AUTO UP and AUTO DOWN function.

Protected by AR

(cont'd)

Resetting the Power Window Control Unit (cont'd)

Without the HDS

1. Turn the ignition switch ON (II).
2. Move the driver's (passenger's) window all the way down by using the driver's (passenger's) window DOWN switch.
3. Open the driver's (passenger's) door.

   NOTE: Steps 4—7 must be done within 5 seconds of each other.

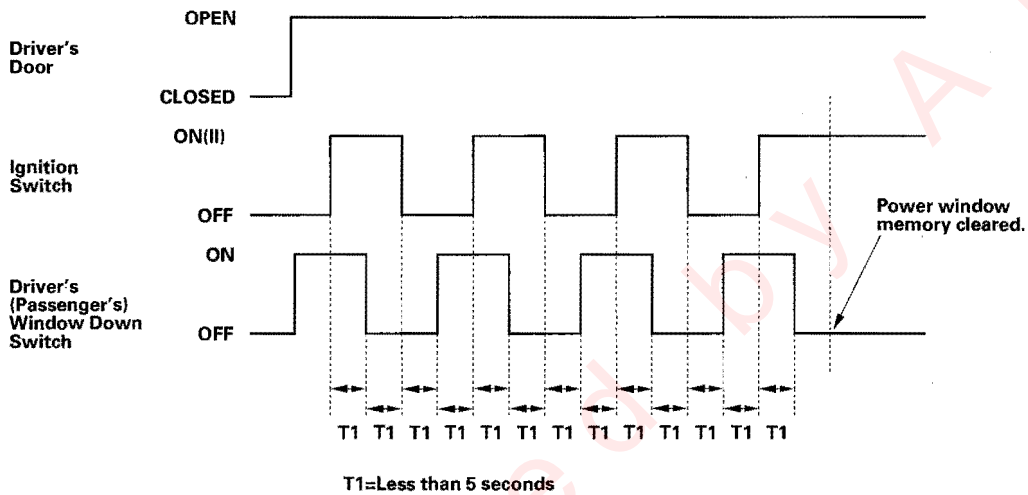

T1=Less than 5 seconds

4. Turn the ignition switch OFF.
5. Push and hold the driver's (passenger's) window DOWN switch.
6. Turn the ignition switch ON (II).
7. Release the driver's (passenger's) window DOWN switch.
8. Repeat step 4-7 three more times.
9. Wait 1 second.
10. Confirm that AUTO UP and AUTO DOWN do not work. If AUTO UP and DOWN work, go back to step 1.
11. Move the driver's (passenger's) window all the way down by using the driver's (passenger's) window DOWN switch.
12. Pull up and hold the driver's (passenger's) window UP switch until the window reaches the fully closed position, then continue to hold the switch for 1 second.
13. Confirm that the power window control unit is reset by using the driver's (passenger's) window AUTO UP and AUTO DOWN function.

    If the window still does not work in AUTO, repeat the procedure several times, paying close attention to the 5 second time limit between steps. If it still does not work, go to B-CAN System Diagnosis Test Mode A (see page 22-108).

Protected by A R

Circuit Diagram

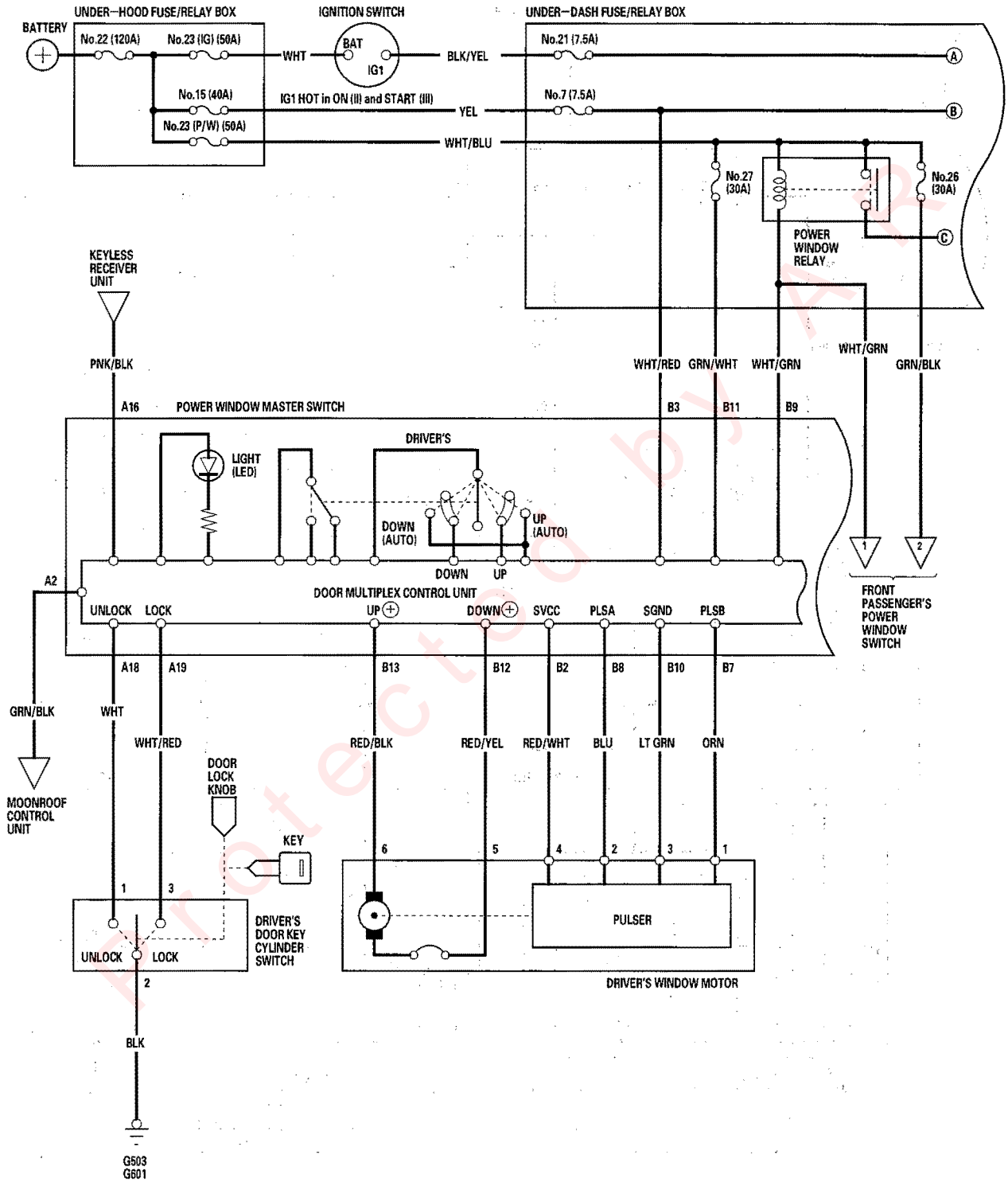

(cont'd)

Circuit Diagram (cont'd)

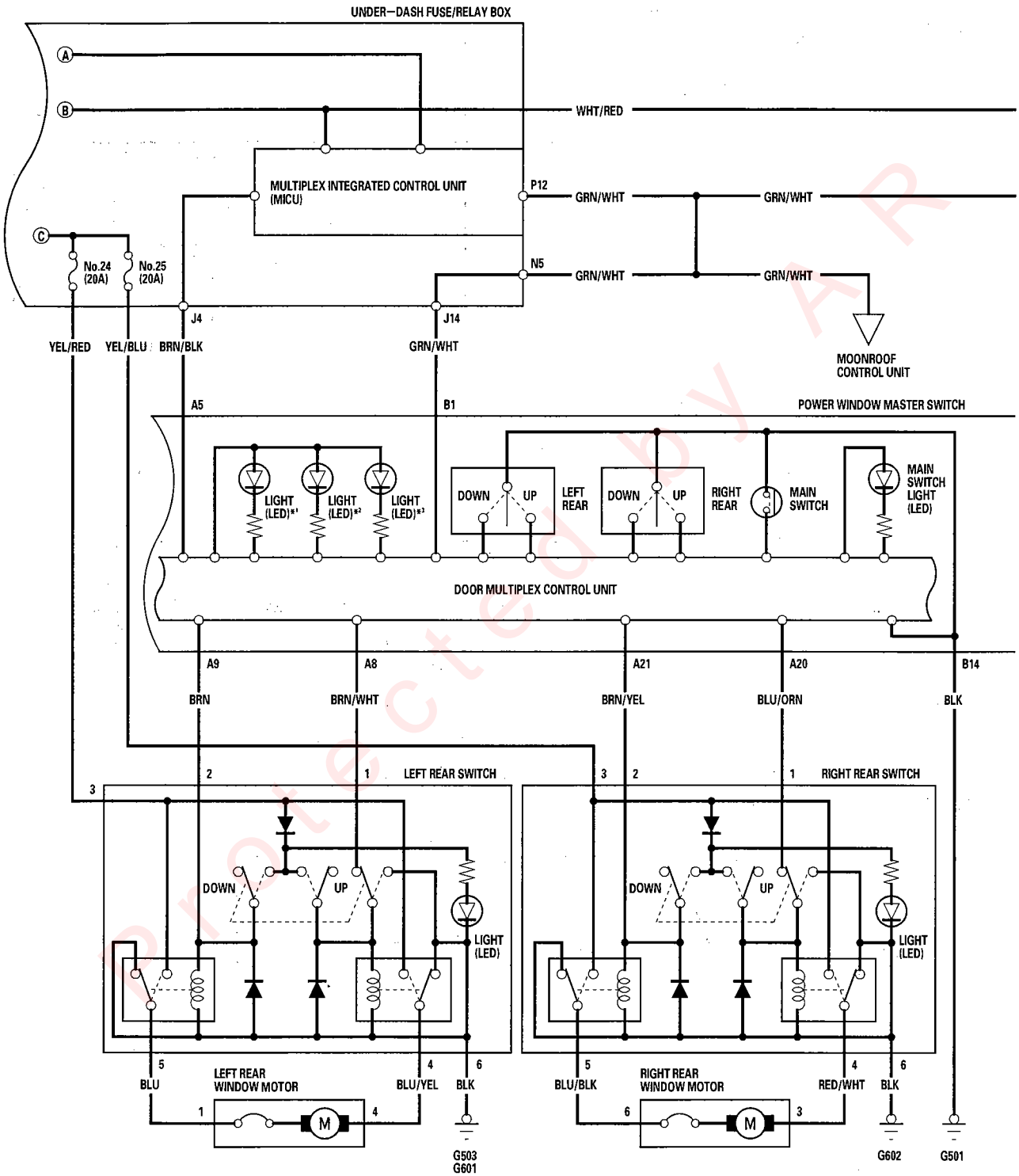

Protected by AR

*1 : FRONT PASSENGER'S SWITCH
*2 : LEFT REAR SWITCH
*3 : RIGHT REAR SWITCH

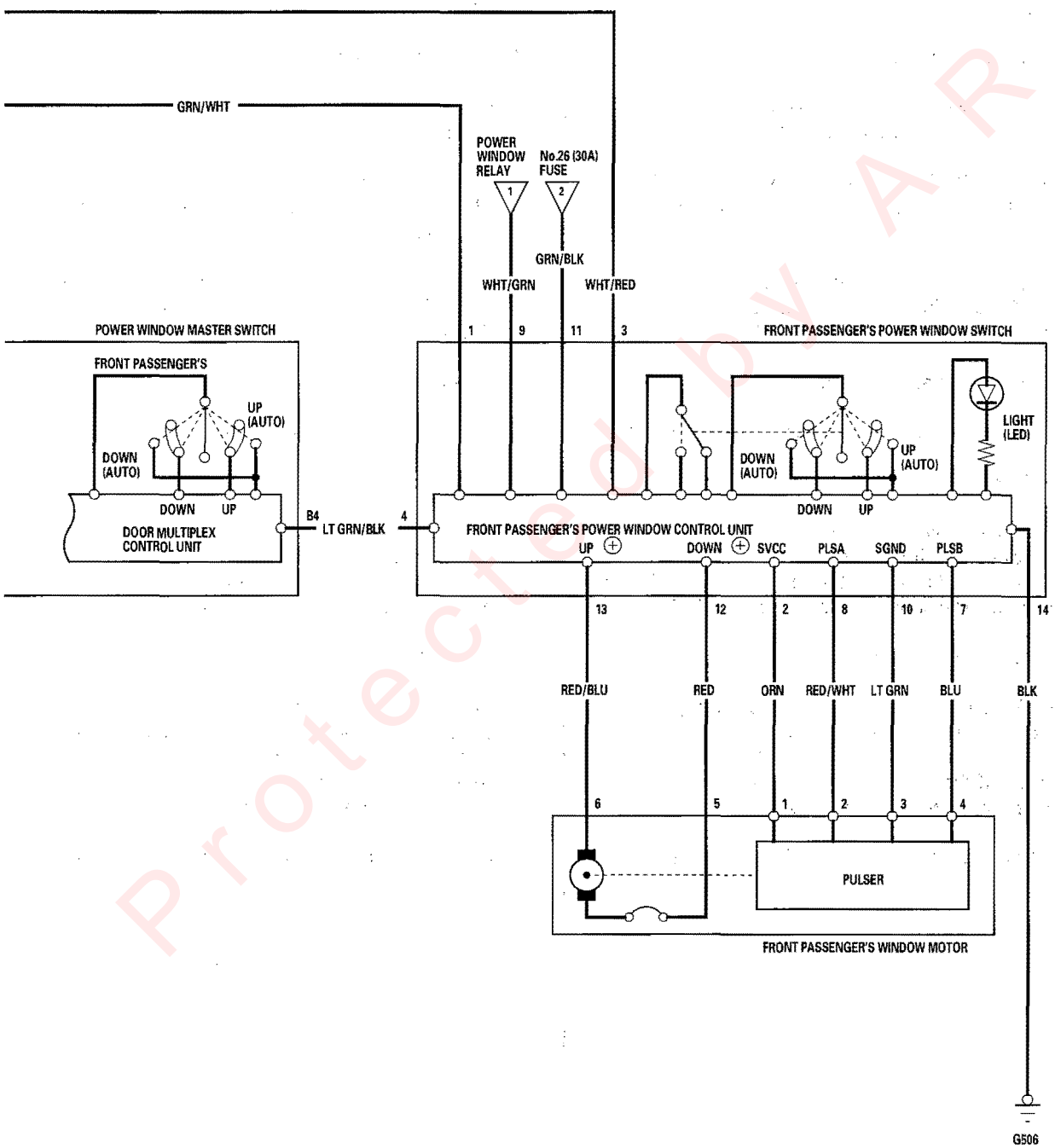

Protected by AR

DTC Troubleshooting

DTC B1125: Driver's Power Window Motor A Pulse Error

NOTE: If you are troubleshooting multiple DTCs, be sure to follow the instructions in B-CAN system diagnosis test mode A (see page 22-108).

1. Turn the ignition switch ON (II).
2. Open and close the driver's power window by using the driver's switch manually.
3. Select the POWER WINDOWS from the BODY ELECTRICAL SYSTEM SELECT MENU and enter DATA LIST.
4. While the power window is moving, check the DETECT/NONE information of the Driver's Power Window Motor Pulse A in the DATA LIST.

   Does the information indicator display DETECT?

   YES—Replace the door multiplex control unit .■

   NO—Go to step 5.
5. Refer to the power window master switch input test, check for continuity between the driver's power window motor 6P connector and the door multiplex control unit 14P connector B (see page 22-232).

   Are all the wire harness OK?

   YES—Substitute a known-good door multiplex control unit , and recheck. If DTC is gone, the original door multiplex control unit is faulty; replace it. If the DTC is still indicated, replace the driver's power window motor.■

   NO—Repair a short or an open in the wire.■

DTC B1126: Driver's Power Window Motor B Pulse Error

NOTE: If you are troubleshooting multiple DTCs, be sure to follow the instructions in B-CAN system diagnosis test mode A (see page 22-108).

1. Turn the ignition switch ON (II).
2. Open and close the driver's power window by using the driver's switch manually.
3. Select the POWER WINDOWS from the BODY ELECTRICAL SYSTEM SELECT MENU and enter DATA LIST.
4. While the power window is moving, check the DETECT/NONE information of the Driver's Power Window Motor Pulse B in the DATA LIST.

   Does the information indicator display DETECT?

   YES—Replace the door multiplex control unit .■

   NO—Go to step 5.
5. Refer to the power window master switch input test, check for continuity between the driver's power window motor 6P connector and the door multiplex control unit 14P connector B (see page 22-232).

   Are all the wire harness OK?

   YES—Substitute a known-good door multiplex control unit , and recheck. If DTC is gone, the original door multiplex control unit is faulty; replace it. If the DTC is still indicated, replace the driver's power window motor. ■

   NO—Repair a short or an open in the wire.■

Protected by AR

DTC B1130: Front Passenger's Power Window Motor A Pulse Error

NOTE: If you are troubleshooting multiple DTCs, be sure to follow the instructions in B-CAN system diagnosis test mode A (see page 22-108).

1. Turn the ignition switch ON (II).
2. Open and close the front passenger's power window by using the front passenger's switch manually.
3. Select the POWER WINDOWS from the BODY ELECTRICAL SYSTEM SELECT MENU and enter DATA LIST.
4. While the power window is moving, check the DETECT/NONE information of the Passenger's Power Window Motor Pulse A in the DATA LIST.

   Does the information indicator display DETECT?

   YES—Replace the door multiplex control unit. ■

   NO—Go to step 5.

5. Refer to the front passenger's power window switch input test, check for continuity on the wires between the front passenger's power window motor 6P connector and the front passenger's power window switch 14P connector (see page 22-232).

   Are all the wires OK?

   YES—Substitute a known-good front passenger's power window switch, and recheck. If DTC is gone, the original switch is faulty; replace it. If the DTC is still indicated, replace the front passenger's power window motor. ■

   NO—Repair a short or an open in the wire. ■

DTC B1131: Front Passenger's Power Window Motor B Pulse Error

NOTE: If you are troubleshooting multiple DTCs, be sure to follow the instructions in B-CAN system diagnosis test mode A (see page 22-108).

1. Turn the ignition switch ON (II).
2. Open and close the front passenger's power window by using the front passenger's switch manually.
3. Select the POWER WINDOWS from the BODY ELECTRICAL SYSTEM SELECT MENU and enter DATA LIST.
4. While the power window is moving, check the DETECT/NONE information of the Passenger's Power Window Motor Pulse B in the DATA LIST.

   Does the information indicator display DETECT?

   YES—Replace the door multiplex control unit. ■

   NO—Go to step 5.

5. Refer to the front passenger's power window switch input test, check for continuity on the wires between the front passenger's power window motor 6P connector and the front passenger's power window switch 14P connector (see page 22-232).

   Are all the wires OK?

   YES—Substitute a known-good front passenger's power window switch, and recheck. If DTC is gone, the original switch is faulty; replace it. If the DTC is still indicated, replace the front passenger's power window motor. ■

   NO—Repair a short or an open in the wire. ■

Protected by AR

DTC Troubleshooting (cont'd)

DTC B1140: Driver's Power Window Position Detect Circuit Error

NOTE: If you are troubleshooting multiple DTCs, be sure to follow the instructions in B-CAN system diagnosis test mode A (see page 22-108).

1. Clear the DTCs with the HDS.
2. Turn the ignition switch OFF, and then back ON (II).
3. Open and close the driver's power window by using the driver's switch manually.
4. Check for DTCs with the HDS.

   Is DTC B1125 or B1126 indicated?

   YES—Troubleshoot the DTC B1125 (see page 22-226) or B1126 (see page 22-226). ■

   NO—Go to step 5.
5. Reset the power window control unit (see page 22-221).
6. Check for DTCs again with the HDS.

   Is DTC B1140 indicated?

   YES—Go to step 7.

   NO—The system is recovered at this time. ■
7. Substitute a known-good power window master switch.
8. Open and close the driver's power window by using the driver's switch manually.
9. Check for DTCs with the HDS.

   Is DTC B1140 indicated?

   YES—Faulty driver's window motor; replace it. ■

   NO—Faulty door multiplex control unit; replace the power window master switch. ■

DTC B1141: Door Multiplex Control Unit Lost Communication with Front Passenger's Power Window Switch (UART line short)

NOTE: If you are troubleshooting multiple DTCs, be sure to follow the instructions in B-CAN system diagnosis test mode A (see page 22-108).

1. Clear the DTCs with the HDS.
2. Turn the ignition switch OFF, and then back ON (II).
3. Open and close the front passenger's power window by using the power window master switch manually.
4. Open and close the front passenger's power window by using the front passenger's power window switch manually.
5. Check for DTCs with the HDS.

   Is DTC B1141 indicated?
   YES—Go to step 6.
   NO—The system is OK at this time. Check for loose or poor connections at the passenger's power window switch connector. ■
6. Turn the ignition switch OFF.
7. Disconnect the door multiplex control unit connectors and front passenger's power window switch connector.
8. Check for continuity between the door multiplex control unit connector B (14P) No. 4 terminal and body ground.

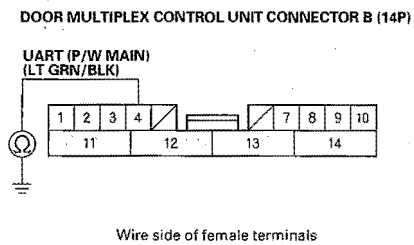

Wire side of female terminals

Is there continuity?
YES—Repair a short in the wire. ■
NO—Substitute a known-good door multiplex control unit, and recheck. If DTC is gone, the original door multiplex control unit is faulty; replace it. If the DTC B1141 is still indicated, replace the front passenger's power window switch. ■

Protected by AR

DTC B1142: Door Multiplex Control Unit Lost Communication with Front Passenger's Power Window Switch (UART line open)

NOTE: If you are troubleshooting multiple DTCs, be sure to follow the instructions in B-CAN system diagnosis test mode A (see page 22-108).

1. Clear the DTCs with the HDS.
2. Turn the ignition switch OFF, and then back ON (II).
3. Open and close the front passenger's power window by using the power window master switch manually.
4. Open and close the front passenger's power window by using the front passenger's power window switch manually.
5. Check for DTCs with the HDS.

   Is DTC B1142 indicated?

   YES—Go to step 6.

   NO—The system is OK at this time. Check for loose or poor connections at the passenger's power window switch connector.■
6. Turn the ignition switch OFF.
7. Disconnect the door multiplex control unit connectors and front passenger's power window switch connector.
8. Check for continuity between the door multiplex control unit connector B (14P) No. 4 terminal and front passenger's power window switch 14P connector No. 4 terminals.

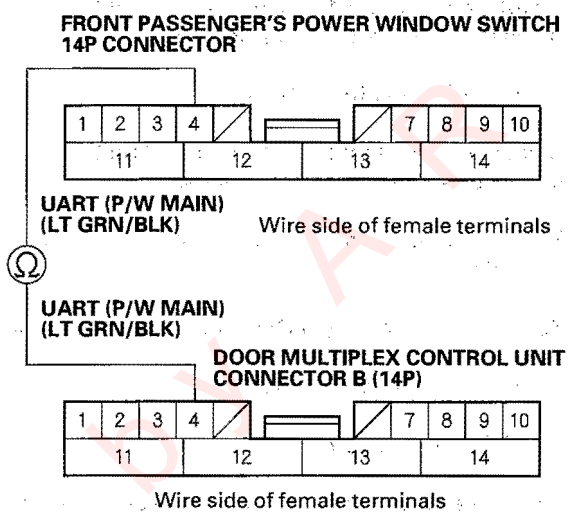

Is there continuity?

YES—Substitute a known-good front passenger's power window switch, and recheck. If DTC is gone, the original front passenger's power window switch is faulty; replace it. If the DTC B1142 is still indicated, replace the door multiplex control unit.■

NO—Repair an open in the wire.■

Protected by AR

DTC Troubleshooting (cont'd)

DTC B1143: Door Multiplex Control Unit Internal Error (EEPROM error)

NOTE: If you are troubleshooting multiple DTCs, be sure to follow the instructions in B-CAN system diagnosis test mode A (see page 22-108).

1. Clear the DTCs with the HDS.
2. Disconnect the door multiplex control unit connectors and wait for 2 seconds.
3. Reconnect the connectors to the door multiplex control unit.
4. Turn the ignition switch OFF, and then back ON (II).
5. Check for DTCs with the HDS.

   Is DTC B1143 indicated?

   YES—Check connections. If OK, replace the door multiplex control unit. ■

   NO—The system is OK at this time. Check the battery and charging system. ■

DTC B1145: Front Passenger's Power Window Position Detect Circuit Error

NOTE: If you are troubleshooting multiple DTCs, be sure to follow the instructions in B-CAN system diagnosis test mode A (see page 22-108).

1. Clear the DTC with the HDS.
2. Turn the ignition switch OFF, and then back ON (II).
3. Open and close the front passenger's power window by using the front passenger's switch manually.
4. Check for DTCs with the HDS.

   Is DTC B1130 or B1131 indicated?

   YES—Troubleshoot the DTC B1130 (see page 22-227) or B1131 (see page 22-227). ■

   NO—Go to step 5.
5. Reset the power window control unit (see page 22-221) and reset the front passenger's power window control unit.
6. Check for DTCs again with the HDS.

   Is DTC B1145 indicated?

   YES—Go to step 7.

   NO—The system is recovered at this time. ■
7. Substitute a known-good passenger's power window switch.
8. Open and close the front passenger's power window by using the front passenger's switch manually.
9. Check for DTCs with the HDS.

   Is DTC B1145 indicated?

   YES—Faulty front passenger's window motor; replace it. ■

   NO—Faulty front passenger's power window switch; replace the front passenger's power window switch. ■

Protected by AR

DTC B1146: Front Passenger's Power Window Switch Malfunction

NOTE: If you are troubleshooting multiple DTCs, be sure to follow the instructions in B-CAN system diagnosis test mode A (see page 22-108).

1. Clear the DTCs with the HDS.
2. Open the driver's door.
3. Turn the ignition switch OFF.
4. Disconnect the 14P connector from the front passenger's power window switch and wait for 2 seconds.
5. Reconnect the 14P connector to the front passenger's power window switch.
6. Turn the ignition switch ON (II).
7. Check for DTCs with the HDS.

   Is DTC B1146 indicated?

   YES—Check connections. If OK, replace the front passenger's power window switch (EEPROM error).■

   NO—The system is OK at this time.■

Protected by AR

Master Switch Input Test

NOTE: Make sure the ignition switch is OFF before disconnecting the under-dash fuse/relay box connectors.

1. Before testing the power windows, troubleshoot the multiplex integrated control system using B-CAN System Diagnosis Test Mode A (see page 22-108).
2. Turn the ignition switch OFF.
3. Remove the power window master switch (see page 22-239).
4. Disconnect the 22P connector (A) and 14P connector (B) from the power window master switch (C).

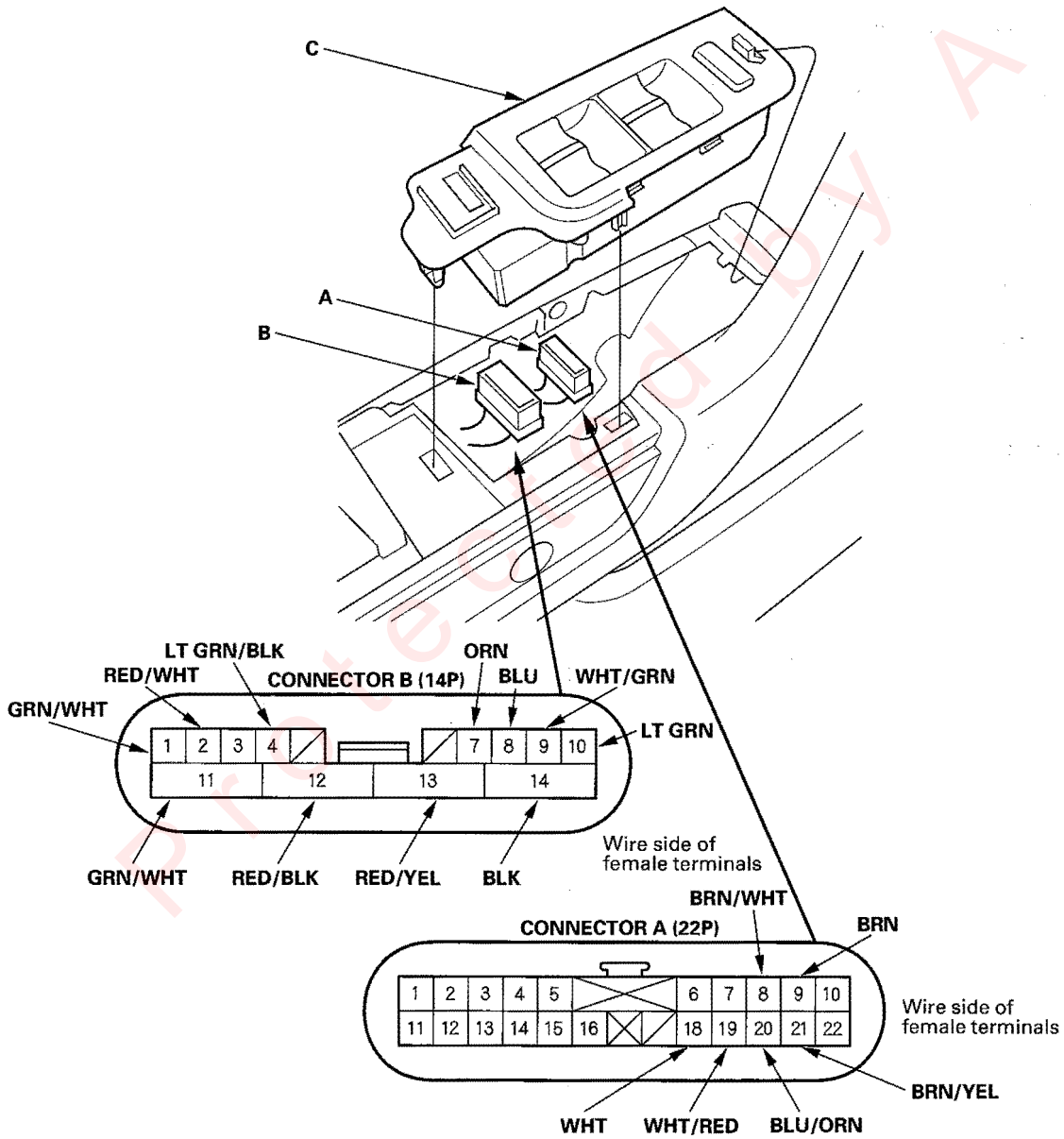

Protected by A R

5. Inspect the connector and socket terminals to be sure they are all making good contact.

   - If the terminals are bent, loose or corroded, repair them as necessary, and recheck the system.
   - If the terminals look OK, go to step 6.

6. With the power window master switch still disconnected, make these input tests at the connector.

   - If any test indicates a problem, find and correct the cause, then recheck the system.
   - If all the input tests prove OK, go to step 7.

Cavity	Wire	Test condition	Test: Desired result	Possible cause if result is not obtained
B9	WHT/GRN	Under all conditions	Connect B9 terminal to ground. Check for voltage at under-dash fuse/relay box No. 24 (20A) fuse: There should be battery voltage.	• Blown No. 23 (P/W) (50A) fuse in the under-hood fuse/relay box. • Faulty power window relay • Faulty under-dash fuse/relay box • An open in the wire
B11	GRN/WHT	Under all conditions	Check for voltage to ground: There should be battery voltage.	• Blown No. 23 (P/W) (50A) fuse in the under-hood fuse/relay box • Blown No. 27 (30A) fuse in the under-dash fuse/relay box • An open in the wire • Faulty under-dash fuse/relay box
B14	BLK	Under all conditions	Check for continuity to ground: There should be continuity.	• Poor ground (G501) • An open in the wire
B12	RED/YEL	Connect the B11 and B13 terminals with a jumper wire, and connect B12 terminal to body ground.	Check the driver's window motor operation: The window should go up.	• Blown No. 27 (30A) fuse in the under-dash fuse/relay box • An open in the wire • Faulty driver's power window motor
B13	RED/BLK	Connect the B11 and B12 terminals with a jumper wire, and connect B13 terminal to body ground.	Check for driver's window motor operation: The window should go down.	
A8	BRN/WHT	Connect the B11 and A8 terminals with a jumper wire and connect B9 to body ground with a jumper wire.	Check the left rear window motor operation: The window should go up.	• Poor ground (G501) • Blown No. 24 (20A) fuse in the under-dash fuse/relay box • An open in the wire • Faulty power window relay • Faulty left rear power window switch • Faulty left rear power window motor
A9	BRN	Connect the B11 and A9 terminals with a jumper wire and connect B9 to body ground with a jumper wire.	Check the left rear window motor operation: The window should go down.	
A20	BLU/ORN	Connect the B11 and A20 terminals with a jumper wire and connect B9 to body ground with a jumper wire.	Check the right rear window motor operation: The window should go up.	• Poor ground (G602) • Blown No. 25 (20A) fuse in the under-dash fuse/relay box • An open in the wire • Faulty power window relay • Faulty right rear power window switch • Faulty right rear power window motor
A21	BRN/YEL	Connect the B11 and A21 terminals with a jumper wire and connect B9 to body ground with a jumper wire.	Check the right rear window motor operation: The window should go down.	
B1	GRN/WHT	Under all conditions	Check for continuity between the B1 terminal and under-dash fuse/relay box connector P terminal No. 12. There should be continuity.	• Faulty under-dash fuse/relay box • An open in the wire
B4	LT GRN/BLK	Under all conditions	Check for continuity between the B4 terminal and front passenger's power window switch connector terminal No. 4: There should be continuity.	An open in the wire
		Front passenger's power window switch connector disconnected.	Check for continuity between the B4 terminal and body ground: There should be no continuity.	A short in the wire

(cont'd)

Master Switch Input Test (cont'd)

7. Reconnect the connectors to the switch. Turn the ignition switch ON (II) and perform the following input tests.

- If any test indicates a problem, find and correct the cause, then recheck the system.
- If all the input tests prove OK, the control unit must be faulty; replace the power window master switch.

Cavity	Wire	Test condition	Test: Desired result	Possible cause if result is not obtained
B2	RED/WHT	Ignition switch ON (II)	Check for voltage to ground: There should be battery voltage.	• Faulty power window master switch • Short to ground in the wire
B10	LT GRN	Under all conditions	Check for voltage to ground: There should be 1 V or less.	Faulty power window master switch
B8	BLU	Ignition switch ON (II), and the driver's window switch moving up or down	Check for voltage between the B8 and B10 terminals: There should be 0 V—about 5 V—0 V—about 5 V repeatedly (a digital voltmeter reads about 2.5 V while the window moves).	• Blown No. 7 (7.5A) fuse in the under-dash fuse/relay box • Blown No. 27 (30A) fuse in the under-dash fuse/relay box • An open in the wire (RED/WHT, BLU, LT GRN, ORN) • Short to ground in the wire • Faulty driver's window motor • Faulty power window master switch
B7	ORN	Ignition switch ON (II), and the driver's window switch moving up or down	Check for voltage between the B7 and B10 terminals: There should be 0 V—about 5 V—0 V—about 5 V repeatedly (a digital voltmeter reads about 2.5 V while the window moves).	
A18	WHT	Driver's door key cylinder switch in UNLOCK	Check for voltage to ground: There should be 1 V or less.	• Faulty driver's door key cylinder switch • Poor ground (G503, G601) • An open in the wire
		Driver's door key cylinder switch in neutral	Check for voltage to ground: There should be 5 V or more.	• Short to ground • Faulty driver's door key cylinder switch
		Driver's door key cylinder switch in LOCK	Check for voltage to ground: There should be 5 V or more.	
A19	WHT/RED	Driver's door key cylinder switch in LOCK	Check for voltage to ground: There should be 1 V or less.	• Faulty driver's door key cylinder switch • Poor ground (G503, G601) • An open in the wire
		Driver's door key cylinder switch in neutral	Check for voltage to ground: There should be 5 V or more.	• Short to ground • Faulty driver's door key cylinder switch
		Driver's door key cylinder switch in UNLOCK	Check for voltage to ground: There should be 5 V or more.	

8. Reset the power window control unit (see page 22-221).

Protected by

Front Passenger's Power Window Switch Input Test

NOTE: Make sure the ignition switch is OFF before disconnecting the passenger's power window switch.

1. Before testing the power windows, troubleshoot the multiplex integrated control system using B-CAN System Diagnosis Test Mode A (see page 22-108).
2. Remove the front passenger's power wondow switch (see page 22-240).
3. Disconnect the 14P connector (A) from the front passenger's power window switch (B).

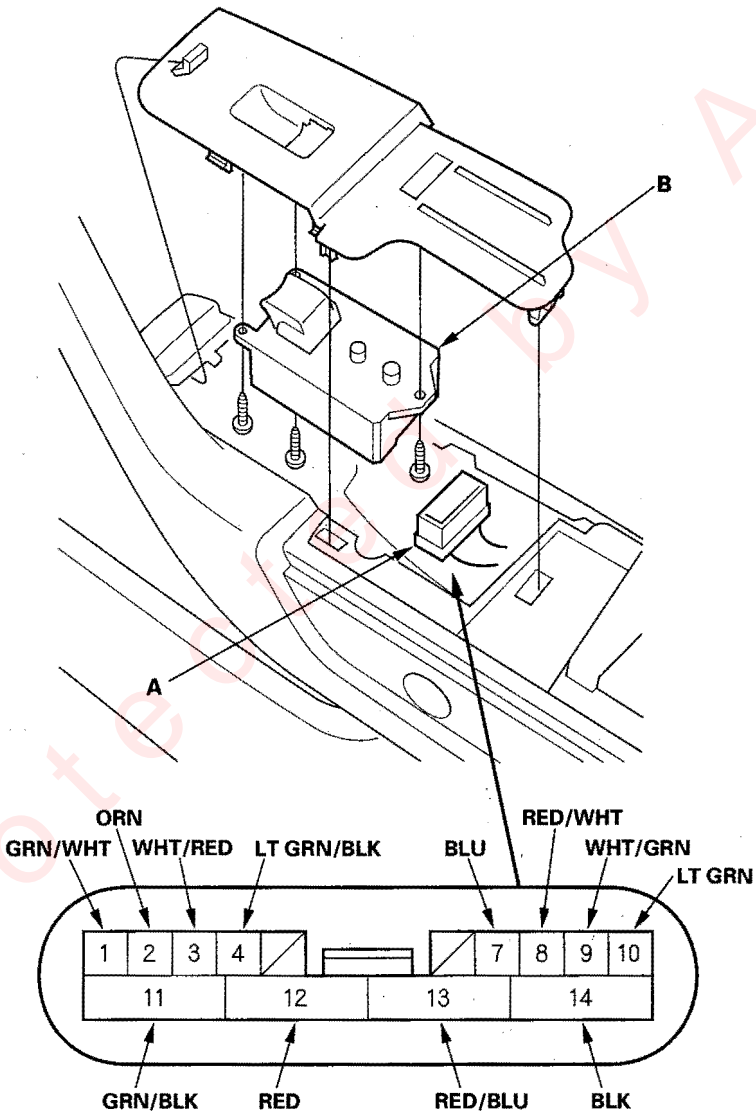

Wire side of female terminals

4. Inspect the connector and socket terminals to be sure they are all making good contact.
   - If the terminals are bent, loose or corroded, repair them as necessary, and recheck the system.
   - If the terminals look OK, go to step 5.

(cont'd)

Front Passenger's Power Window Switch Input Test (cont'd)

5. With the front passenger's power window switch still disconnected, make these input tests at the connector.

- If any test indicates a problem, find and correct the cause, then recheck the system.
- If all the input tests prove OK, go to step 6.

Cavity	Wire	Test condition	Test: Desired result	Possible cause if result is not obtained
1	GRN/WHT	Under all conditions	Check for continuity between the No. 1 terminal and under-dash fuse/relay box connector P (30P) terminal No. 12: There should be continuity.	An open in the wire
3	WHT/RED	Under all conditions	Check for voltage to ground: There should be battery voltage.	• Blown No. 7 (7.5A) fuse in the under-dash fuse/relay box • An open in the wire
9	WHT/GRN	Under all conditions	Connect No. 9 terminal to ground. Check for voltage at under-dash fuse/relay box No. 24 (20A) fuse: There should be battery voltage.	• Blown No. 23 (50A) fuse in the under-hood fuse/relay box • An open in the wire • Faulty power window relay • Faulty under-dash fuse/relay box
11	GRN/BLK	Under all conditions	Check for voltage to ground: There should be battery voltage.	• Blown No. 23 (50A) fuse in the under-hood fuse/relay box • Blown No. 26 (30A) fuse in the under-dash fuse/relay box • Faulty under-dash fuse/relay box • An open in the wire
12	RED	Connect the No. 11 terminal to the No. 12 terminal with a jumper wire, and connect the No. 13 terminal to body ground.	Check front passenger's power window motor operation: The window should go down.	• Blown No. 26 (30A) fuse in the under-dash fuse/relay box • Faulty front passenger's window motor • An open in the wire
13	RED/BLU	Connect the No. 11 terminal to the No. 13 terminal with a jumper wire, and connect the No. 12 terminal to body ground.	Check front passenger's power window motor operation: The window should go up.	
14	BLK	Under all conditions	Check for continuity to ground: There should be continuity.	• Poor ground (G506) • An open in the wire

Protected by AR

6. Reconnect the 14P connector to the switch. Turn the ignition switch ON (II) and perform the following input tests.

- If any test indicates a problem, find and correct the cause, then recheck the system.
- If all the input tests prove OK, the control unit must be faulty; replace the front passenger's power window switch.

Cavity	Wire	Test condition	Test: Desired result	Possible cause if result is not obtained
2	ORN	Ignition switch ON (II)	Check for voltage to ground: There should be battery voltage.	• Faulty front passenger's power window switch • Short to ground in the wire
10	LT GRN	Under all conditions	Check for voltage to ground: There should be 1 V or less.	Faulty front passenger's power window switch
8	RED/WHT	Ignition switch ON (II), and front passenger's power window switch moving up or down	Check for voltage between the No. 8 and No. 10 terminals: There should be 0 V—about 5 V—0 V—about 5 V repeatedly (a digital voltmeter reads about 2.5 V while the window moves).	• Blown No. 7 (7.5A) fuse in the under-dash fuse/relay box • Blown No. 26 (30A) fuse in the under-dash fuse/relay box • An open in the wire (RED/WHT, BLU, LT GRN, ORN) • Faulty front passenger's power window switch • Faulty front passenger's power window motor • Short to ground in the wire
7	BLU	Ignition switch ON (II), and front passenger's power window switch moving up or down	Check for voltage between the No. 7 and No. 10 terminals: There should be 0 V—about 5 V—0 V—about 5 V repeatedly (a digital voltmeter reads about 2.5 V while the window moves).	

7. Reset the power window control unit (see page 22-221).

Protected by AR

Driver's and Front Passenger's Window Motor Test

Motor Test

1. Remove the door panel (see page 20-7).
2. Disconnect the 6P connector (A) from the window motor.

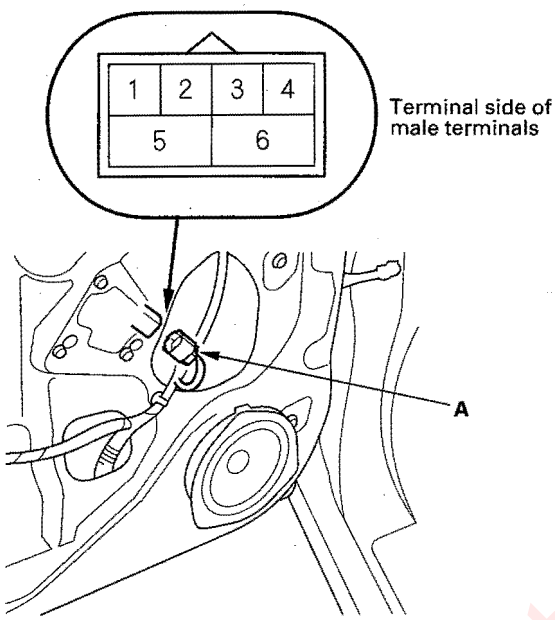

3. Test the motor in each direction by connecting battery power and ground according to the table. When the motor stops running, disconnect one lead immediately.

Terminal / Direction	5	6
UP	⊖	⊕
DOWN	⊕	⊖

4. If the motor does not run or fails to run smoothly, replace it.

Pulser Test

5. Reconnect the 6P connector to the window motor.
6. Check for voltage between the terminals.
   - There should be battery voltage between the No. 4 [No. 1] (+) and No. 3 (−) terminals when the ignition switch is ON (II).
     [ ] : Front passenger's window motor
   - Connect an analog voltmeter between the No. 2 (+) and No. 3 (−) terminals, and run the window motor down or up. The voltmeter needle should move back and forth alternately (a digital voltmeter should show the average voltage between 0−5 V).
   - Connect an analog voltmeter between the No. 1 [No. 4] (+) and No. 3 (−) terminals, and run the window motor at down or up. The voltmeter needle should move back and forth alternately.
     [ ] : Front passenger's window motor
7. If the voltage is not as specified, do the window switch input test;
   - master switch terminals: B2, B7, B8 and B10 (see step 7 on page 22-234).
   - passenger's switch terminals: No. 2, 7, 8, and 10 (see step 6 on page 22-237).
8. If the switch test is OK, replace the power window motor.
9. Reset the power window control unit (see page 22-221).

Protected by R

Rear Window Motor Test

1. Remove the rear door panel (see page 20-7).
2. Disconnect the 6P connector from the window motor.

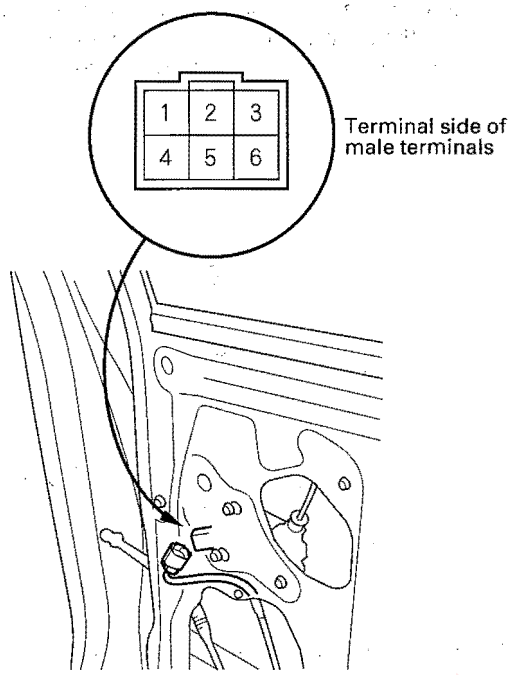

3. Test the motor by connecting battery power and ground according to the table. When the motor stops running, disconnect one lead immediately.

Terminal / Direction	3(4)	6(1)
UP	⊕	⊖
DOWN	⊖	⊕

( ): Left rear window motor

4. If the motor does not run or fails to run smoothly, replace it.

Master Switch Replacement

1. Remove the driver's door panel (see page 20-7).
2. Remove the screw and disconnect the connectors from the master switch, then remove the switch assembly from the door panel.

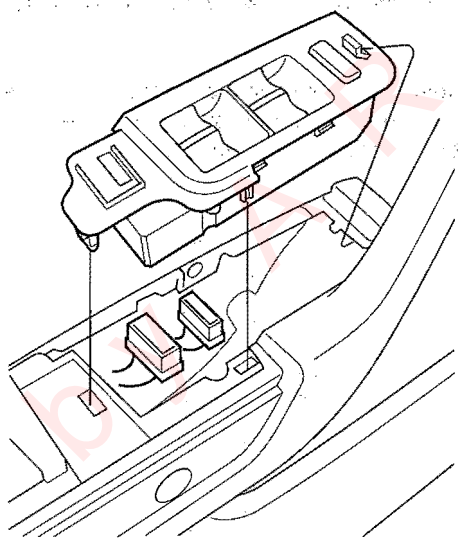

3. Remove the four mounting screws, then remove the master switch from the switch panel.

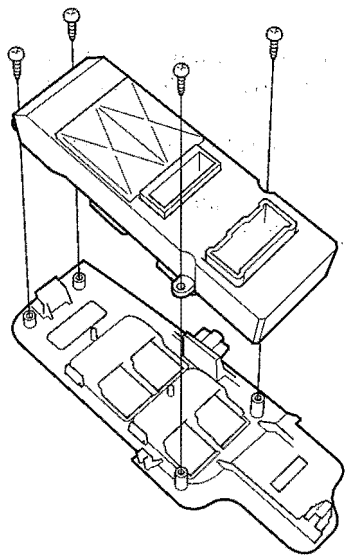

4. Install in the reverse order of removal.
5. Reset the power window control unit (see page 22-221).

Protected by

Passenger's Window Switch Test/Replacement

Front Passenger's

NOTE: To test the front passenger's power window switch, refer to the input test (see page 22-235).

1. Remove the front passenger's door panel (see page 20-7).
2. Remove the screw and disconnect the connector from the power window switch, then remove the switch assembly from the door panel.

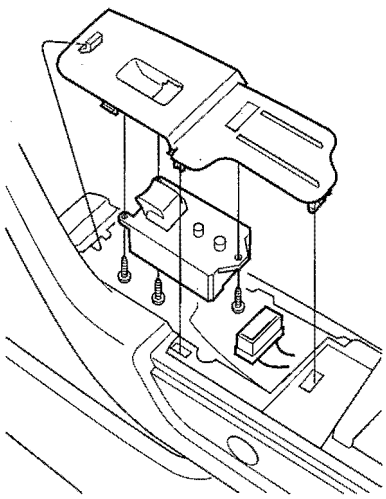

3. Remove the three mounting screws, then remove the power window switch from the switch panel.
4. Install in the reverse order of removal.
5. Reset the power window control unit (see page 22-221).

Rear

1. Remove the rear door panel (see page 20-17).
2. Remove the screw and disconnect the connector from the power window switch, then remove the switch assembly from the door panel.

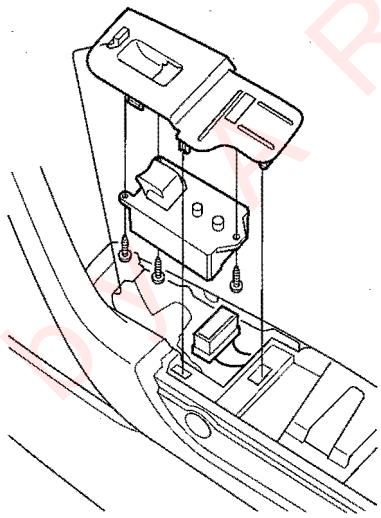

3. Remove the three mounting screws, then remove the power window switch from the switch panel.
4. Swap the rear power window switch with another known-good switch and test. If the original window switch is faulty; replace it.
5. Install in the reverse order of removal.

Protected PDF

Component Location Index

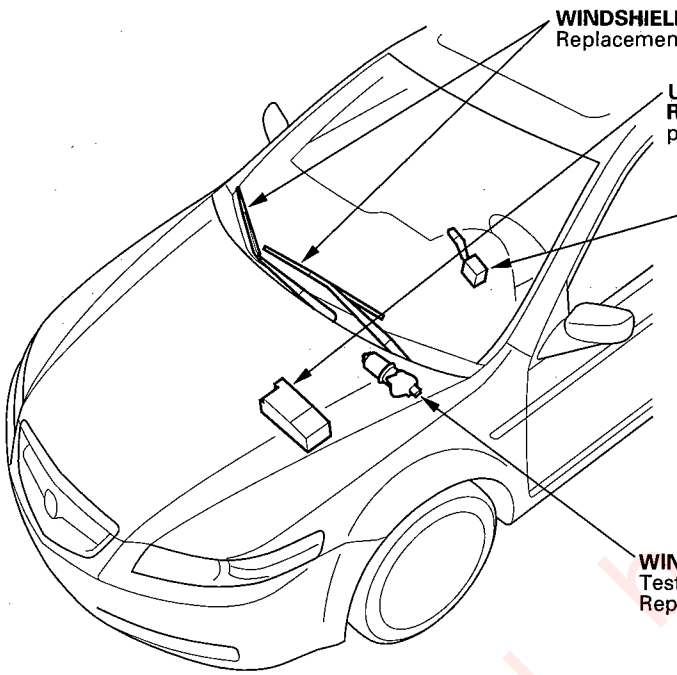

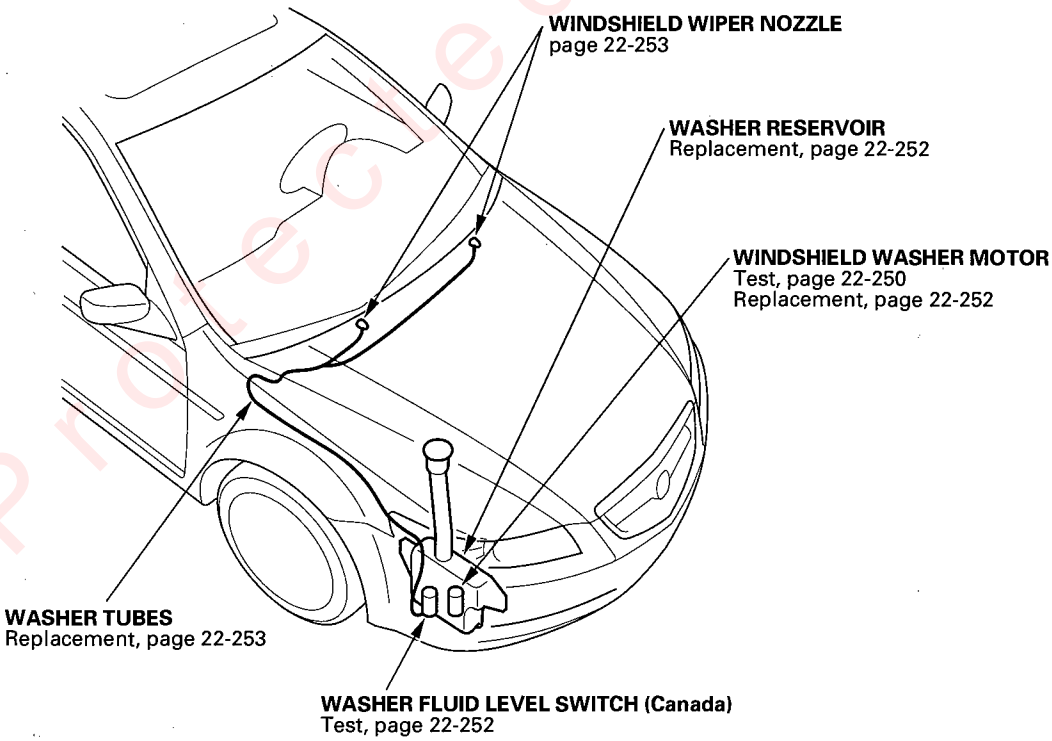

Protected by AR

Circuit Diagram

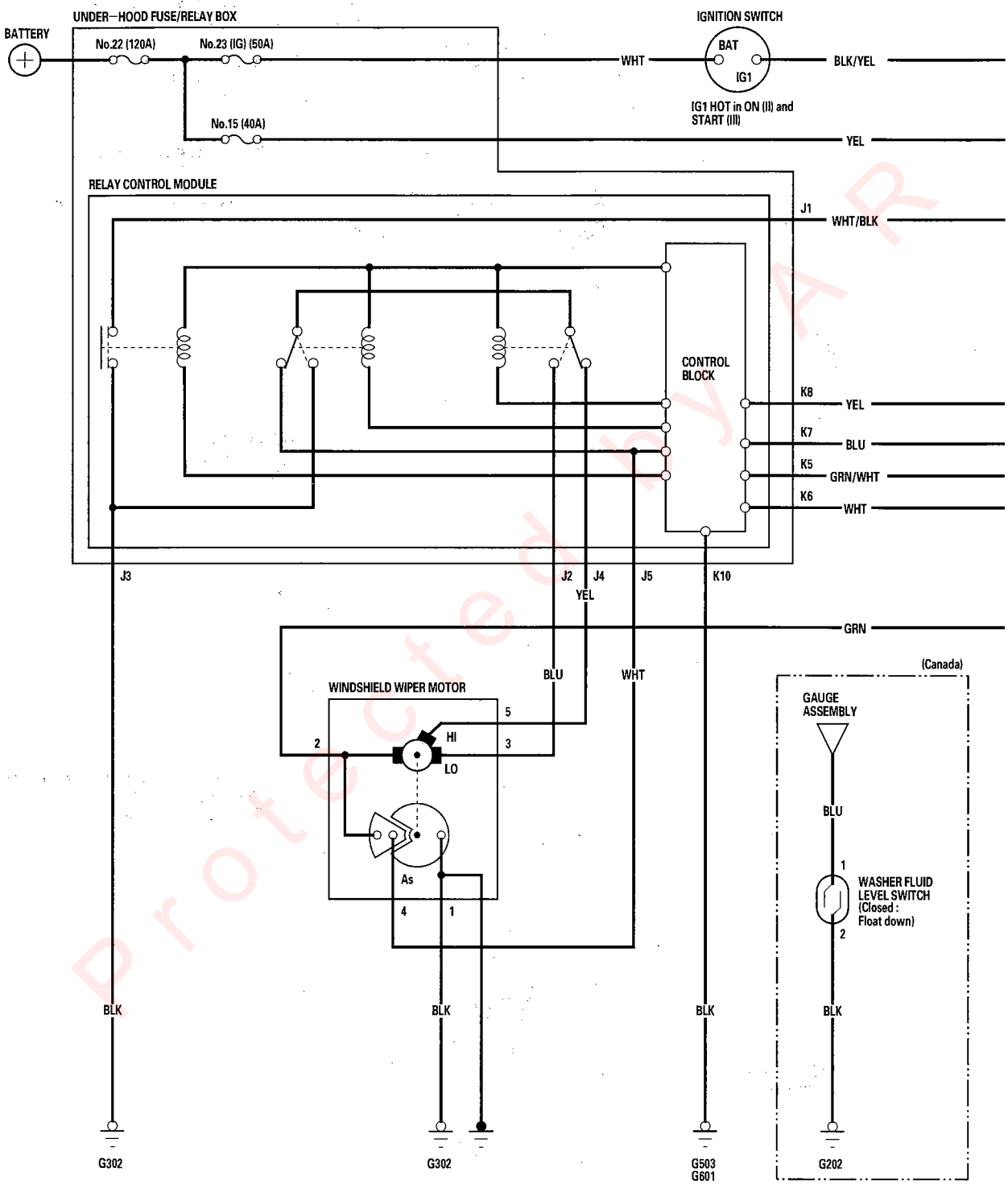

Protected by AR

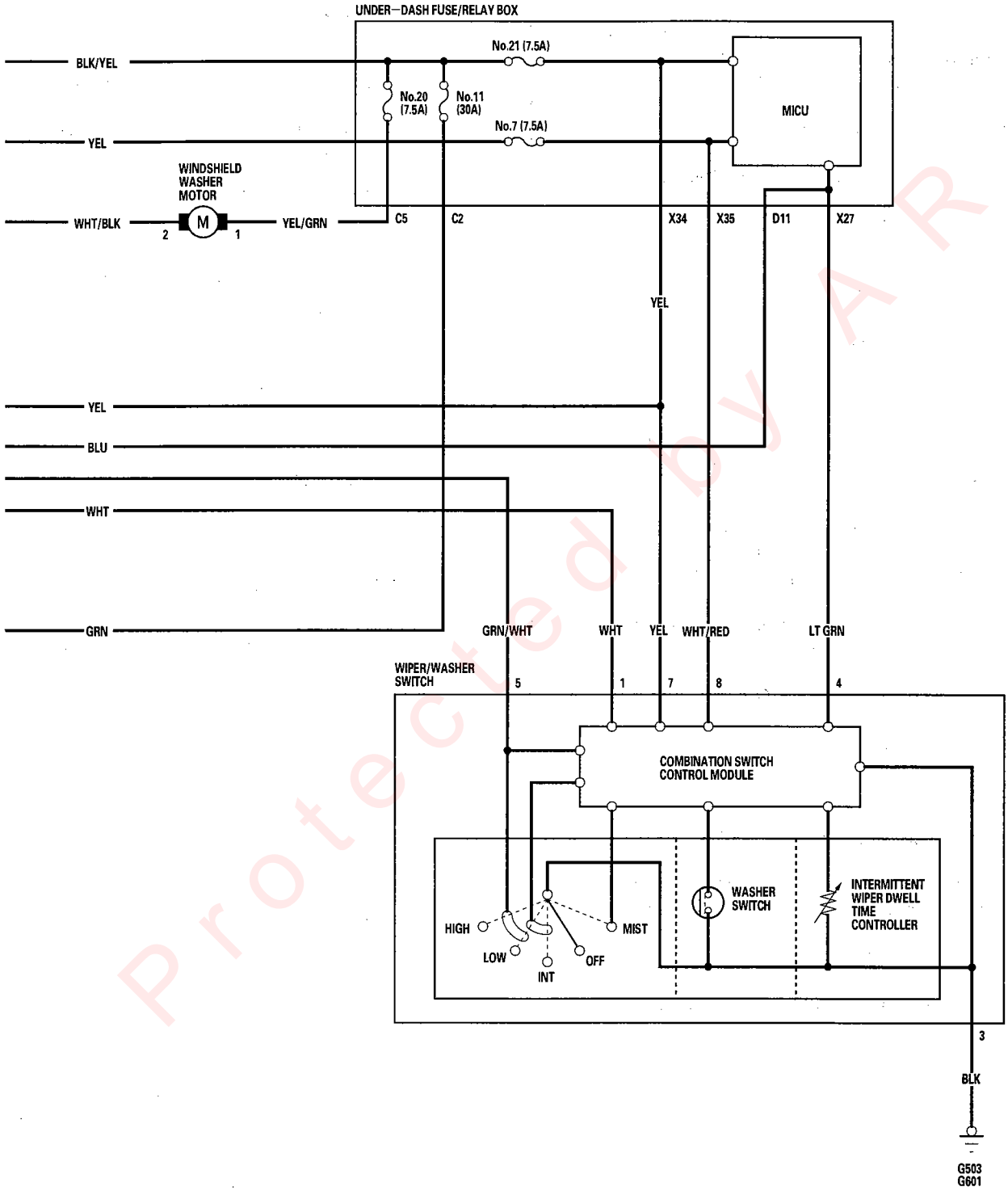

Protected by AR

DTC Troubleshooting

DTC B1076: Windshield Wiper Signal Error

NOTE: If you are troubleshooting multiple DTCs, be sure to follow the instructions in B-CAN system diagnosis test mode A (see page 22-108).

1. Clear the DTCs with the HDS.
2. Turn the ignition switch OFF, and then back ON (II).
3. Turn the wiper switch to INT, LOW, then HIGH for at least 2 seconds each.
4. Check for DTCs with the HDS.

   Is DTC B1076 indicated?

   YES—Go to step 5.

   NO—Intermittent failure. The windshield wiper system is OK at this time. Check pinfits and connections.■
5. With the wiper/washer switch OFF, select Windshield Wipers from the BODY ELECTRICAL SYSTEM SELECT MENU, and enter the DATA LIST.
6. Check the ON/OFF information of the Windshield Wiper Switch (BACK-UP) in the DATA LIST.

   Is the information indicator OFF?

   YES—Go to step 7.

   NO—Go to step 11.
7. Turn the wiper switch ON (low or high).
8. Check the ON/OFF information of the Windshield Wiper Switch (BACK-UP) in the DATA LIST.

   Is the information indicator ON?

   YES—Faulty relay control module; replace the under-hood fuse/relay box.■

   NO—Go to step 9.
9. Disconnect the under-hood fuse/relay box connector K (10P) and the wiper/washer switch 8P connector.
10. Check for continuity between the No. 5 terminal of the under-hood fuse/relay box connector K (10P) and the No. 5 terminal of the wiper/washer switch (combination switch control unit) 8P connector.

UNDER-HOOD FUSE/RELAY BOX CONNECTOR K (10P)

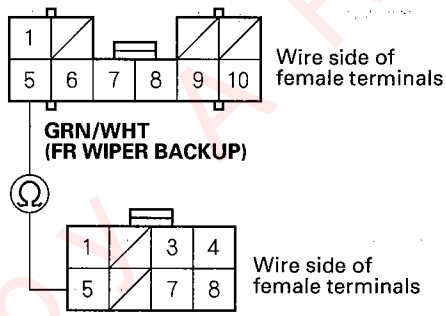

WIPER/WASHER SWITCH 8P CONNECTOR

Is there continuity?

YES—Faulty combination switch control unit; replace the wiper/washer switch.■

NO—Repair an open in the GRN/WHT wire.■

Protected by AR

11. Disconnect the relay control module 10P connector.
12. Check for continuity between the No. 5 terminal of the under-hood fuse/relay box connector K (10P) and body ground.

UNDER-HOOD FUSE/RELAY BOX CONNECTOR K (10P)

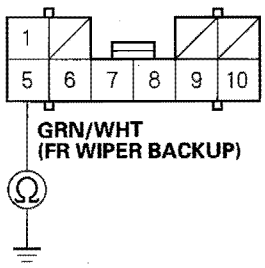

Wire side of female terminals

Is there continuity?

YES — Go to step 13.

NO — Faulty relay control module; replace the under-hood fuse/relay box. ■

13. Disconnect the wiper/washer switch 8P connector.
14. Check for continuity between the No. 5 terminal of the under-hood fuse/relay box connector K (10P) and body ground.

UNDER-HOOD FUSE/RELAY BOX CONNECTOR K (10P)

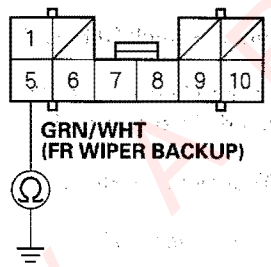

Wire side of female terminals

Is there continuity?

YES — Repair a short in the GRN/WHT wire. ■

NO — Faulty wiper/washer switch; replace it. ■

Protected by ARR

DTC Troubleshooting (cont'd)

DTC B1077: Windshield Wiper (As) Signal Error

NOTE: If you are troubleshooting multiple DTCs, be sure to follow the instructions in B-CAN system diagnosis test mode A (see page 22-108).

1. Clear the DTCs with the HDS.
2. Turn the ignition switch OFF, and then back ON (II).
3. Turn the wiper switch to LOW, then HIGH for at least 15 seconds in each position.
4. Check for DTCs with the HDS.

   Is DTC B1077 indicated?

   YES—Go to step 5.

   NO—Intermittent failure. The windshield wiper system is OK at this time. Check pinfits and connections.■
5. Turn the ignition switch OFF.
6. Perform the wiper motor test (see page 22-250).

   Does the wiper motor operate correctly?

   YES—Go to step 7.

   NO—Replace the windshield wiper motor and recheck.■
7. Turn the ignition switch ON (II).
8. Turn the wiper switch to LOW, then HIGH and check wiper operation.

   Do the wipers operate normally?

   YES—Go to step 9.

   NO—Go to step 12.
9. Disconnect the under-hood fuse/relay box connector J (5P) and windshield wiper motor 5P connector.
10. Check for continuity between the No. 4 terminal of the windshield wiper motor 5P connector and No. 5 terminal of the under-hood fuse/relay box connector J (5P).

UNDER-HOOD FUSE/RELAY BOX CONNECTOR J (5P)

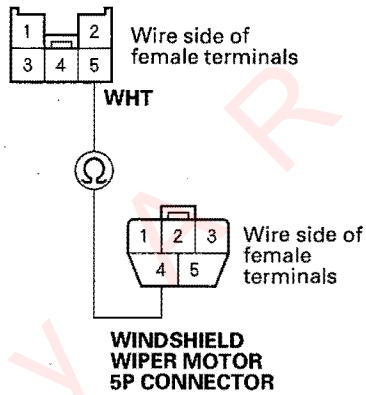

Is there continuity?

YES—Go to step 11.

NO—Repair an open in the WHT wire.■
11. Check for continuity between the No. 5 terminal of the under-hood fuse/relay box connector J (5P) and body ground.

UNDER-HOOD FUSE/RELAY BOX CONNECTOR J (5P)

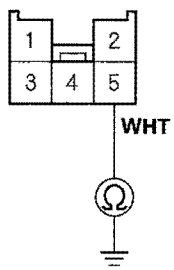

Wire side of female terminals

Is there continuity?

YES—Repair a short in the WHT wire.■

NO—Faulty relay control module; replace the under-hood fuse/relay box.■

Protected by FMR

12. Turn the ignition switch OFF, and check the No. 11 (30A) fuse in the under-dash fuse/relay box.

Is the fuse OK?

YES—Go to step 13.

NO—Replace the blown fuse and recheck the system. If the fuse blown again, check for a short on the GRN wire between the under-dash fuse/relay box and the windshield wiper motor. ■

13. Turn the ignition switch ON (II).

14. Check for voltage between the No. 2 terminal of the windshield wiper motor 5P connector and body ground.

WINDSHIELD WIPER MOTOR 5P CONNECTOR

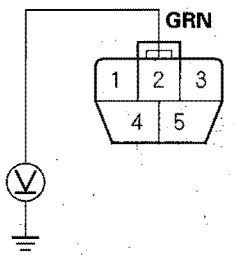

Wire side of female terminals

Is there battery voltage?

YES—Go to step 15.

NO—Repair an open in the GRN wire. ■

15. Check for continuity between the No. 3 and No. 5 terminals of the windshield wiper motor 5P connector and the No. 2 and No. 4 terminals of the under-hood fuse/relay box connector J (5P).

UNDER-HOOD FUSE/RELAY BOX CONNECTOR J (5P)

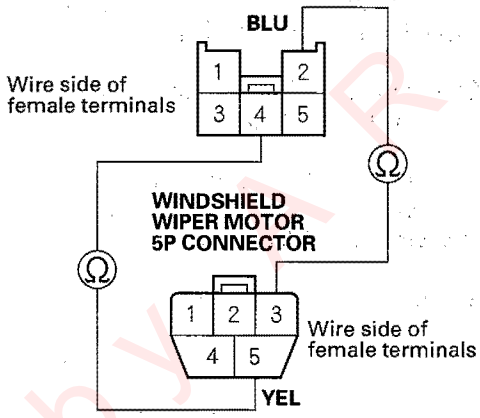

Is there continuity?

YES—Faulty relay control module; replace the under-hood fuse/relay box. ■

NO—Repair an open in the BLU or YEL wire. ■

Protected by R

DTC Troubleshooting (cont'd)

DTC B1281: Windshield Wiper Switch MIST Position Circuit Malfunction

DTC B1282: Windshield Wiper Switch INT (AUTO) Position Circuit Malfunction

DTC B1283: Windshield Wiper Switch LOW Position Circuit Malfunction

DTC B1284: Windshield Wiper Switch HIGH Position Circuit Malfunction

NOTE: If you are troubleshooting multiple DTCs, be sure to follow the instructions in B-CAN system diagnosis test mode A (see page 22-108).

1. Clear the DTCs with the HDS.
2. Turn the ignition switch OFF, and then back ON (II).
3. Turn the windshield wiper switch in MIST and wait for 2 seconds.
4. Turn the windshield wiper switch OFF and wait for 2 seconds.
5. Turn the windshield wiper switch in INT (AUTO) and wait for 2 seconds.
6. Turn the windshield wiper switch in LOW and wait for 2 seconds.
7. Turn the windshield wiper switch in HIGH and wait for 2 seconds.
8. Check for DTCs with the HDS.

   Is DTC B1281, B1282, B1283, or B1284 indicated?

   YES—Replace the windshield wiper/washer switch. ■

   NO—Intermittent failure, the windshield wiper/washer switch and the combination switch control unit are OK at this time. Check pinfits and connections. ■

Wiper/Washer Switch Test/ Replacement

NOTE: The wiper/washer switch is built into the combination switch control unit. For the wiper/washer test, refer to the combination switch control unit input test (see page 22-249).

1. Remove the dashboard lower cover (see page 20-82).
2. Remove the steering column covers (see page 17-24).
3. Disconnect the combination light switch 12P connector (A) and dashboard wire harness 8P connector (B) from the wiper/washer switch (C).

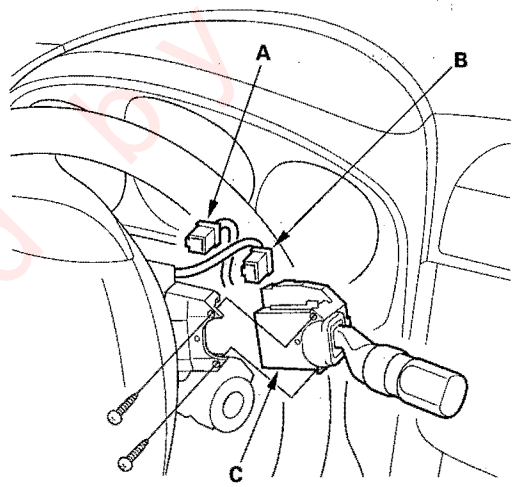

4. Remove the two screws, then slide out the wiper/washer switch.

Protected by MR

Wiper/Washer Switch (Combination Switch Control Unit) Input Test

1. Before troubleshooting the wiper/washer system, troubleshoot the B-CAN System Diagnosis Test Mode A (see page 22-108).
2. Remove the dashboard lower cover (see page 20-82).
3. Remove the steering colmn covers (see page 17-24).
4. Disconnect the 8P connector (A) from the wiper/washer switch (B).

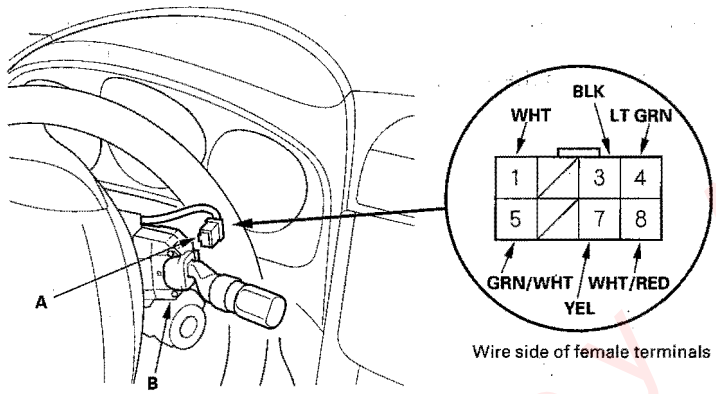

Wire side of female terminals

5. Inspect the connector and socket terminals to be sure they are all making good contact.
   - If the terminals are bent, loose or corroded, repair them as nessesary, and recheck the system.
   - If the terminals look OK, go to step 6.
6. With the connector still disconnected, make these input tests at the connector.
   - If any test indicates a problem, find and correct the cause, then recheck the system.
   - If all the input tests prove OK, replace the wiper/washer switch (combination switch control unit).

Cavity	Wire	Test condition	Test: Desired result	Possible cause if result is not obtained
3	BLK	Under all conditions	Check for continuity to ground: There should be continuity.	• Poor ground (G503, G601) • An open in the wire
8	WHT/RED	Under all conditions	Check for voltage to ground: There should be battery voltage.	• Blown No. 15 (40A) fuse in the under-hood fuse/relay box • Blown No. 7 (10A) fuse in the under-dash fuse/relay box • An open in the wire
7	YEL	Ignition switch ON (II)	Check for voltage to ground: There should be battery voltage.	• Blown No. 21 (7.5A) fuse in the under-dash fuse/relay box • An open in the wire
5	GRN/WHT	Under all conditions	Check for continuity between the No. 5 terminal and under-hood fuse/relay box connector K (10P) No. 5 terminal: There should be continuity.	An open in the wire
		Disconnect the under-hood fuse/relay box connector K (10P)	Check for continuity between the No. 5 terminal and body ground: There should be no continuity.	A short in the wire
4	LT GRN	Under all conditions	Check for continuity between the No. 4 terminal and under-dash fuse/relay box connector X No. 27 terminal: There should be continuity.	An open in the wire
		Disconnect the under-dash fuse/relay box connector X (39P)	Check for continuity between the No. 4 terminal and body ground: There should be no continuity.	A short in the wire
1	WHT	Under all conditions	Check for continuity bwtween the No. 1 terminal and under-hood fuse/relay box connector K (10P) No. 6 terminal: There should be continuity.	An open in the wire
		Disconnect the under-hood fuse/relay box connector K (10P)	Check for continuity between the No. 1 terminal and body ground: There should be no continuity.	A short in the wire

Protected by AR

Wiper Motor Test

1. Open the hood, and remove the wiper arms (see page 22-251).

   NOTE: Carefuly remove the wiper arms, so that they do not touch the hood.

2. Remove the hood seal and cowl cover.

3. Disconnect the 5P connector (A) from the wiper motor (B).

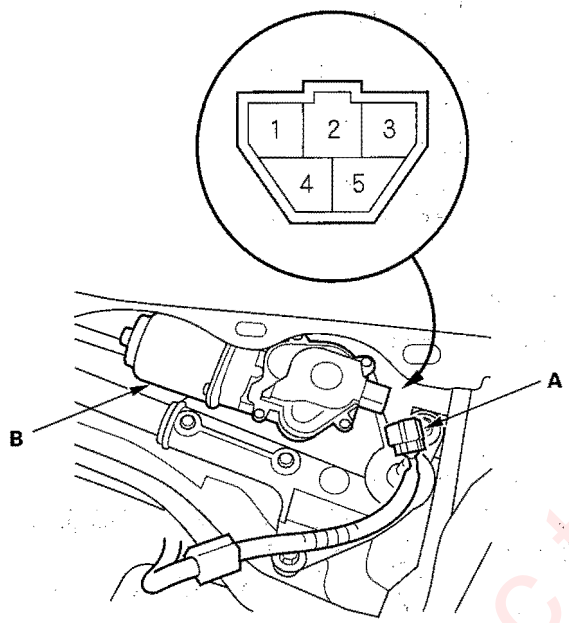

4. Test the motor by connecting battery power to the No. 2 terminal and ground the No. 3 terminal of the wiper motor 5P connector. The motor should run at low speed. If the motor does not run or fails to run smoothly, replace the motor.

5. Test the motor by connecting battery power to the No. 2 terminal and ground the No. 5 terminal of the wiper motor 5P connector. The motor should run at high speed. If the motor does not run or fails to run smoothly, replace the motor.

6. Connect an analog voltmeter between the No. 4 (+) and No. 1 (−) terminals, and run the motor at low or high speed. The voltmeter should indicate 12 V and 4 V or less alternately. If it does not, replace the motor.

Washer Motor Test

1. Remove the right inner fender (see page 20-142).

2. Disconnect the 2P connector (A) from the washer motor (B).

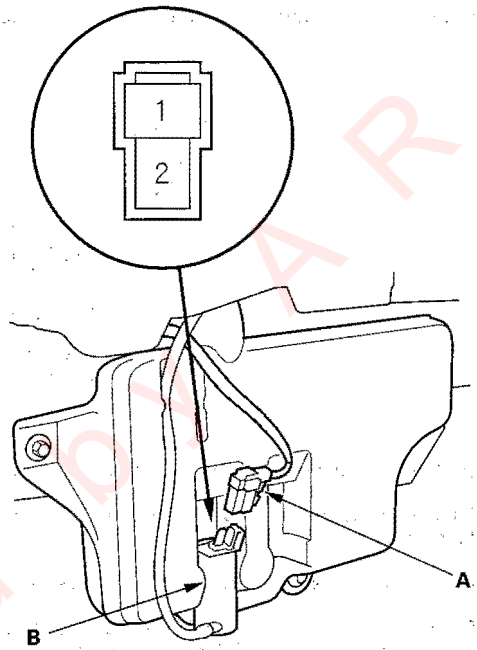

3. Test the motor by connecting battery power to the No. 1 terminal and ground to the No. 2 terminal of the washer motor. The motor should run.

   - If the motor does not run or fails to run smoothly, replace it.
   - If the motor runs smoothly, but little or no washer fluid is pumped, check for a disconnected or blocked washer hose, or a clogged washer motor outlet.

Protected by CAR

Wiper Motor Replacement

1. Open the hood. Remove the left and right rear engine compartment covers (see page 5-2).

2. Remove the caps, nuts (A), and the windshield wiper arms (B).

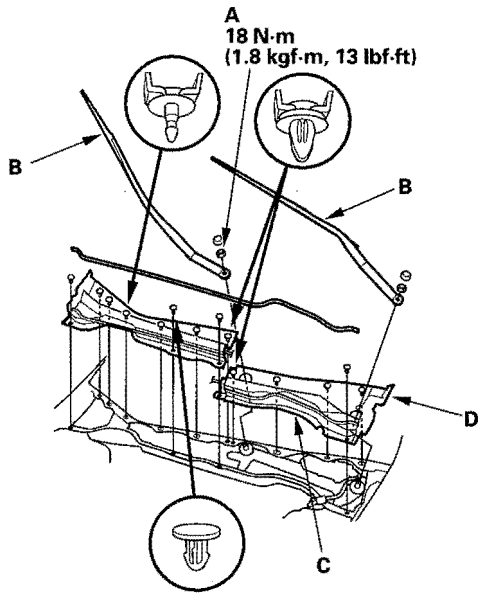

3. Remove the hood seals (C) and cowl covers (D).

4. Disconnect the 5P connector (A) from the wiper motor.

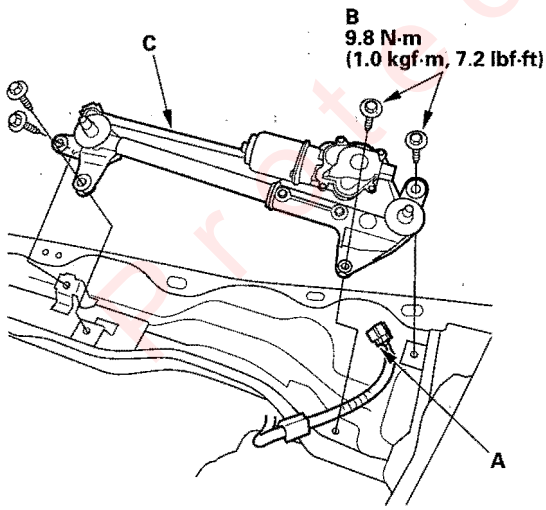

5. Remove the four bolts (B) and wiper linkage assembly (C).

6. Scribe a line (A) across the link and windshield wiper linkage to show the original adjutment. Separate the windshield wiper linkage (B) from the wiper motor (C).

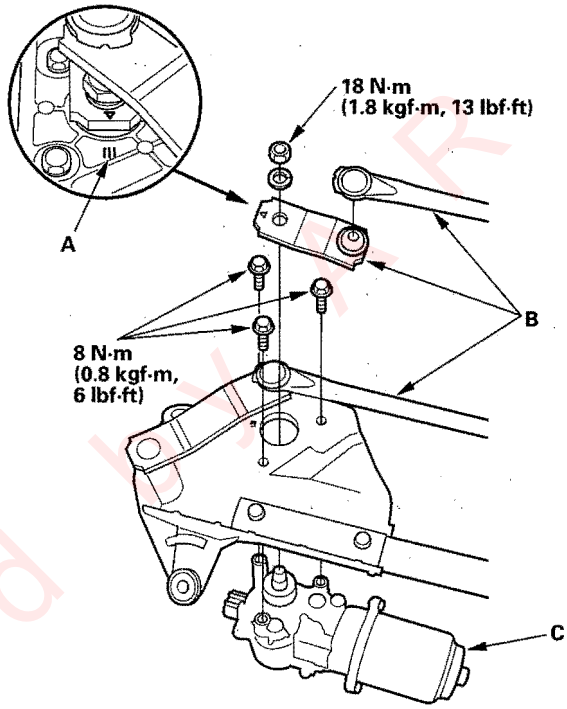

7. Install in the reverse order to removal, and note these items:

- Apply multipurpose grease to the moving parts.
- Before reinstalling the wiper arms, turn the wiper switch ON, then OFF to return the wiper shafts to the park position.
- If necessary, replace any damaged clips.
- Check the wiper motor operation.

Protected by AR

Washer Reservoir Replacement

1. Remove the right inner fender (see page 20-142).
2. Disconnect the washer tube (A) and washer motor 2P connector (B).

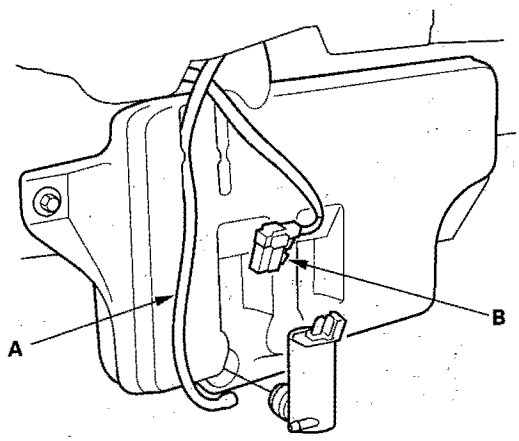

3. Remove the clip and three bolts (A), then remove the washer reservoir (B).

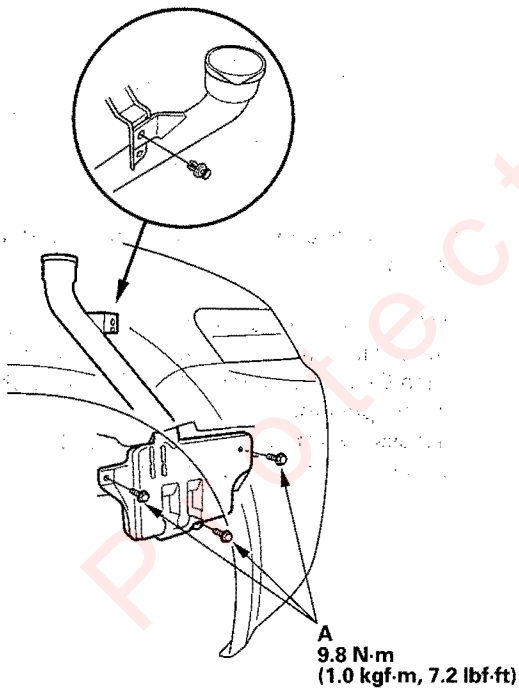

4. Install the reservoir in the reverse order of removal.

Washer Fluid Level Switch Test

Canada

1. Remove the right inner fender (see page 20-142).
2. Disconnect the 2P connector (A) from the washer fluid level switch (B).

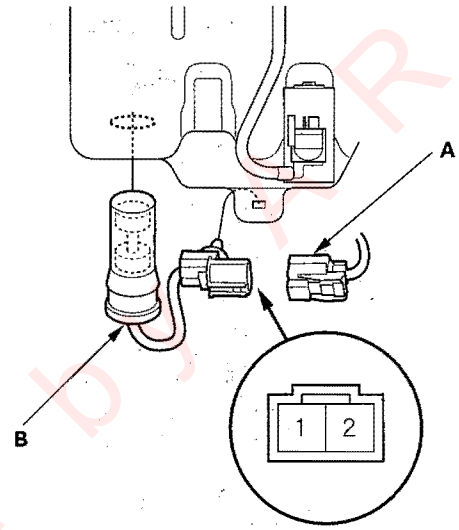

Terminal side of male terminals

3. Remove the washer fluid level switch from the reservoir.

   NOTE: Fluid may flow out of the opening.

4. Check for continuity between the No. 1 and No. 2 terminals in each float position (C).

   - There should be continuity when the float is down.
   - There should be no continuity when the float is up.

5. If the continuity is not as specified, replace the switch.

Protected by AR

Washer Tube Replacement

1. Remove the right inner fender (see page 20-142).
2. Remove the windshield washer nozzles and clips, then remove the tube.

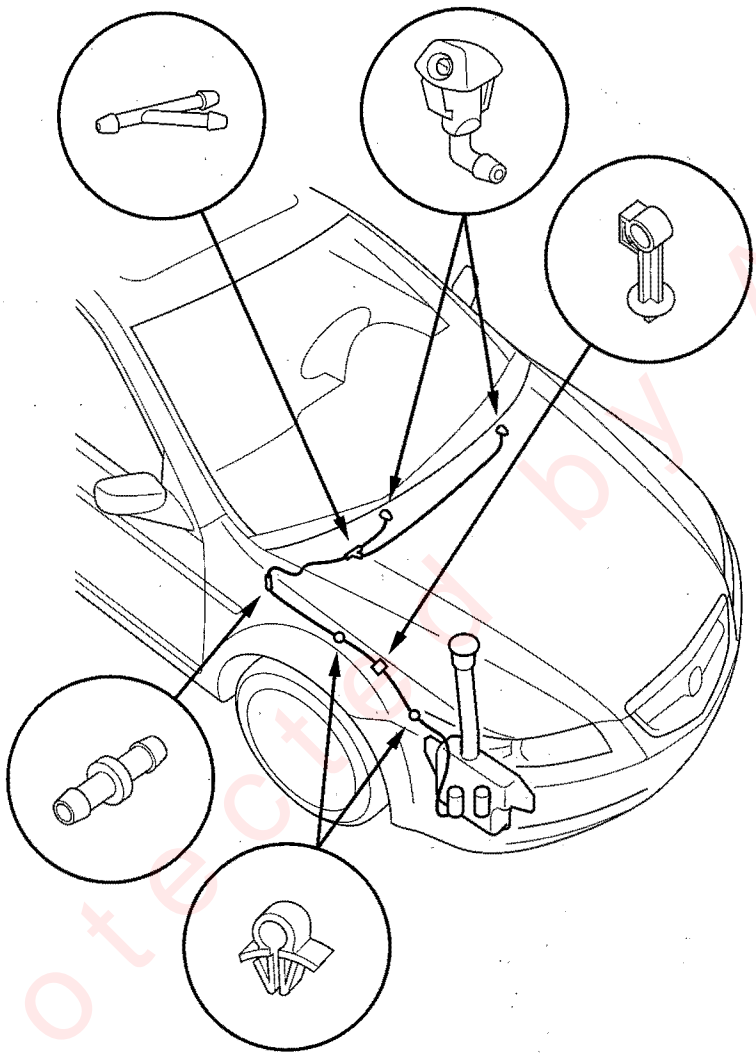

3. Install in the reverse order of removal. Take care not to pinch the washer tube. Check the windshield washer operation.

Protected by AR

Component Location Index

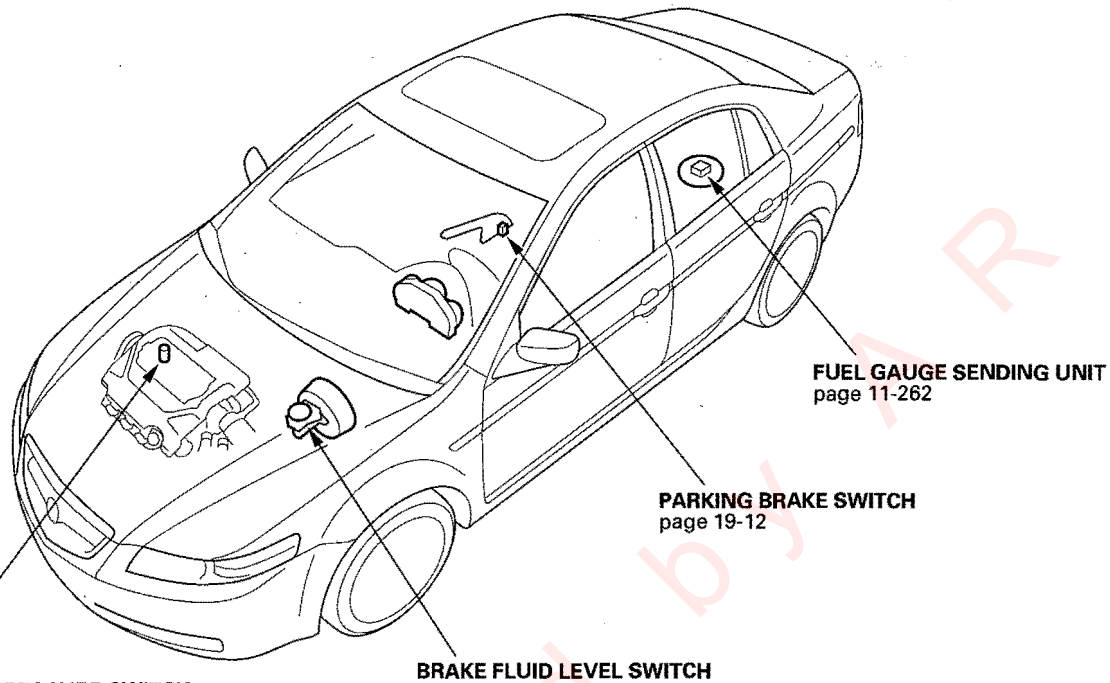

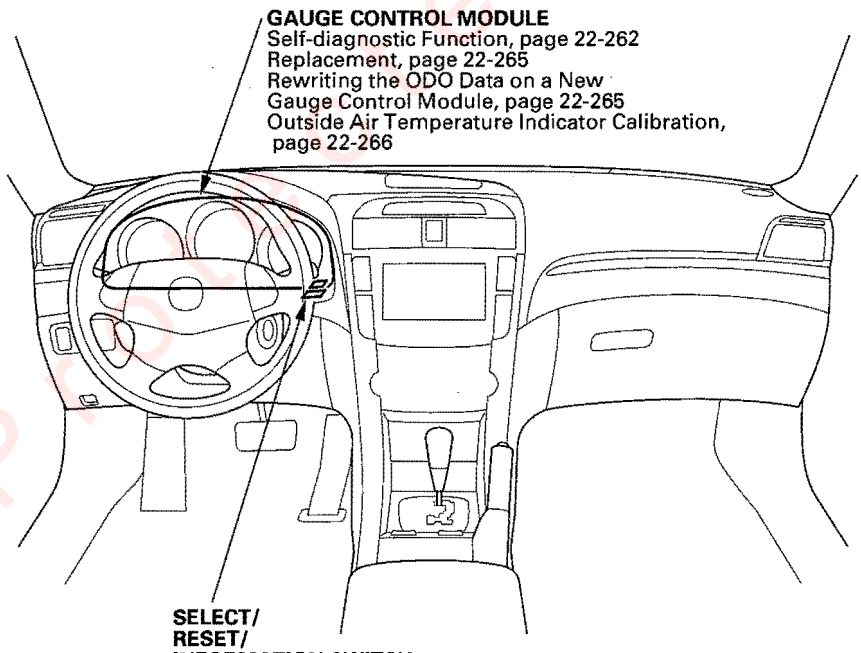

Produced by A R

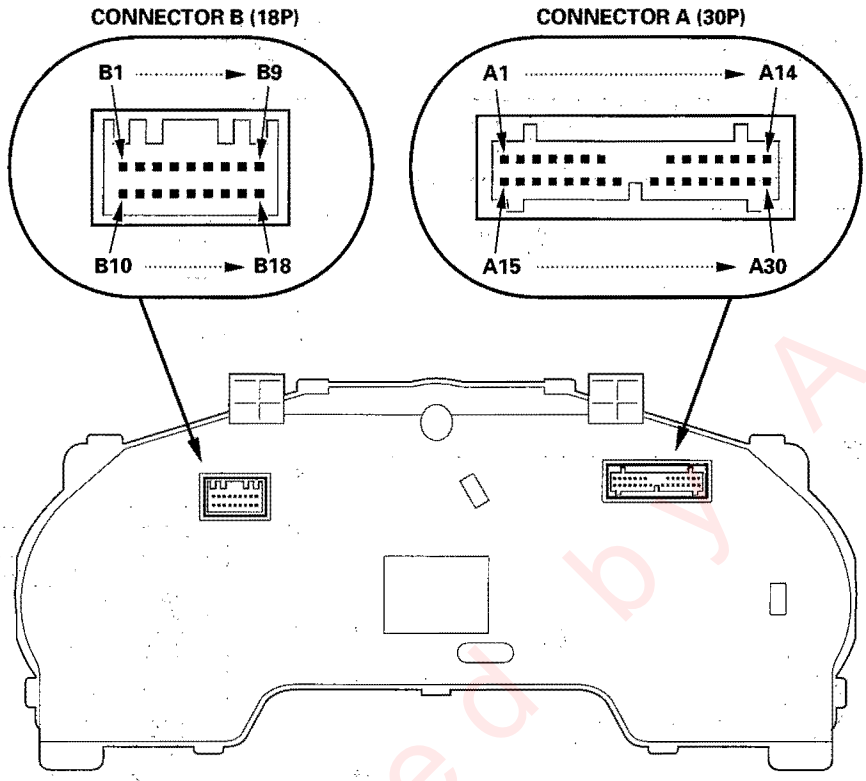

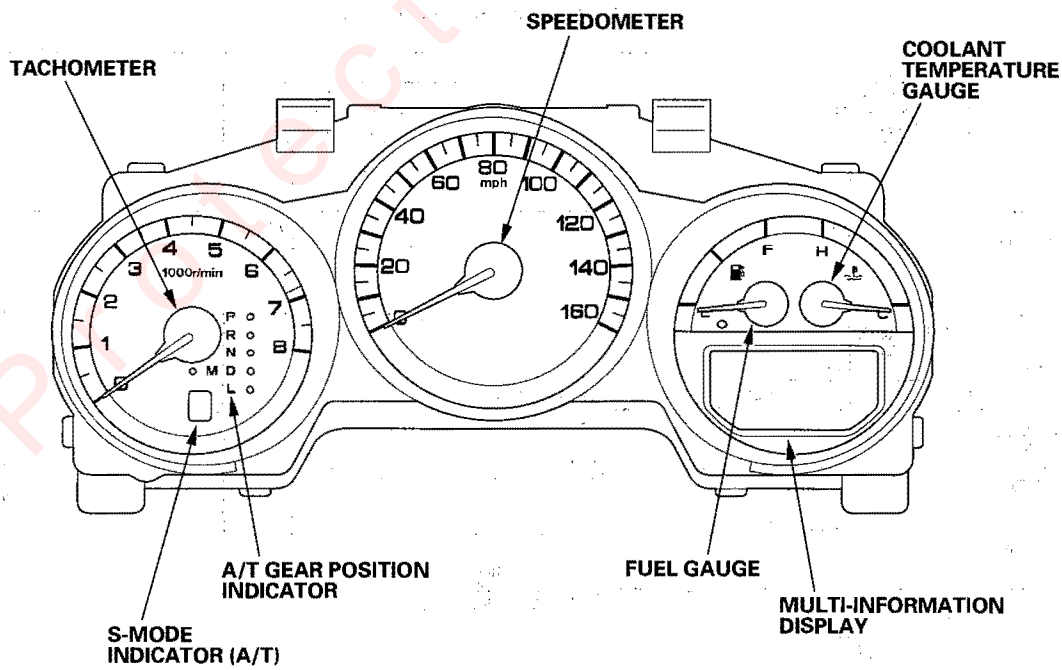

Protected by AR

Circuit Diagram

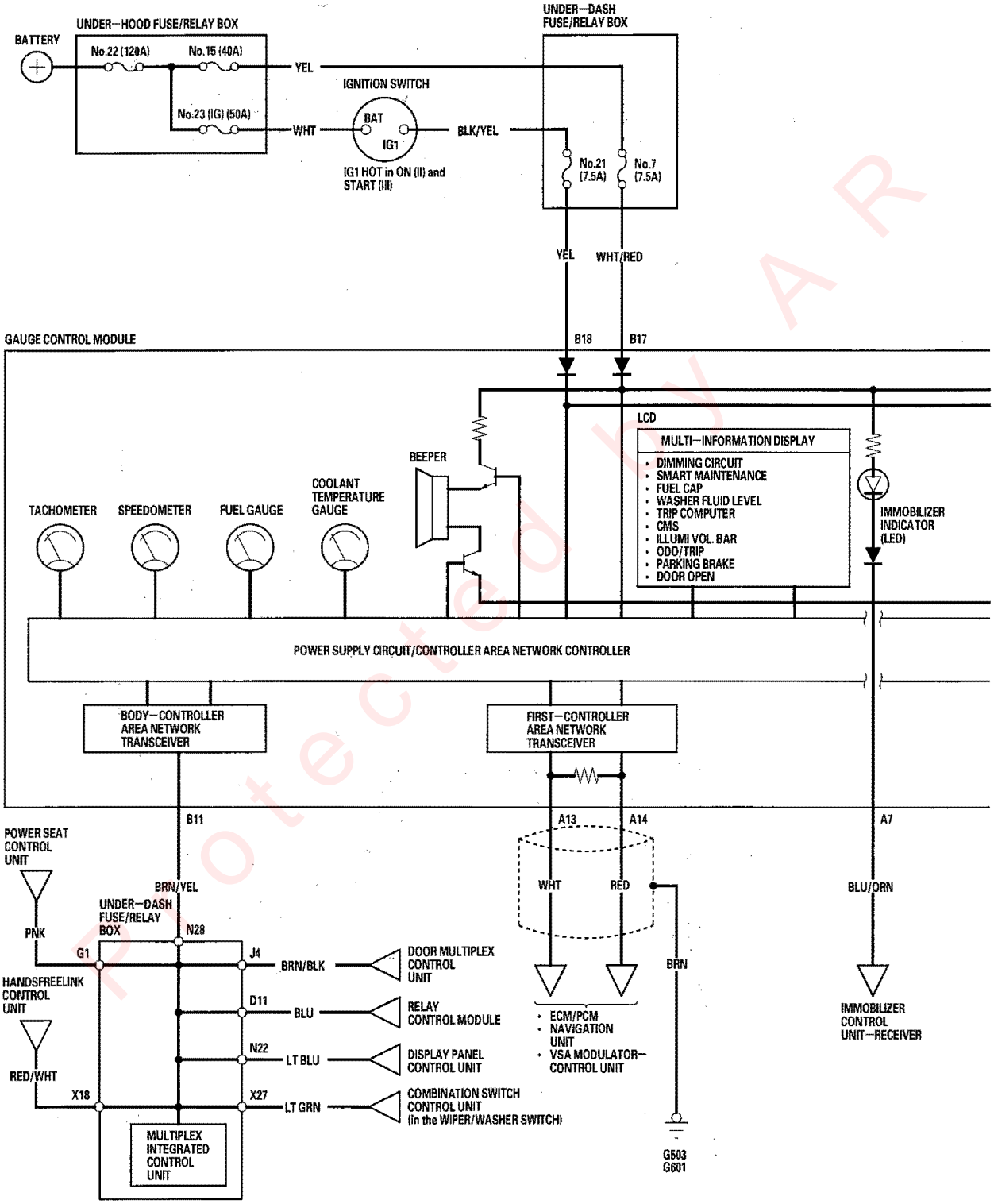

Protected by AR

: Shielding

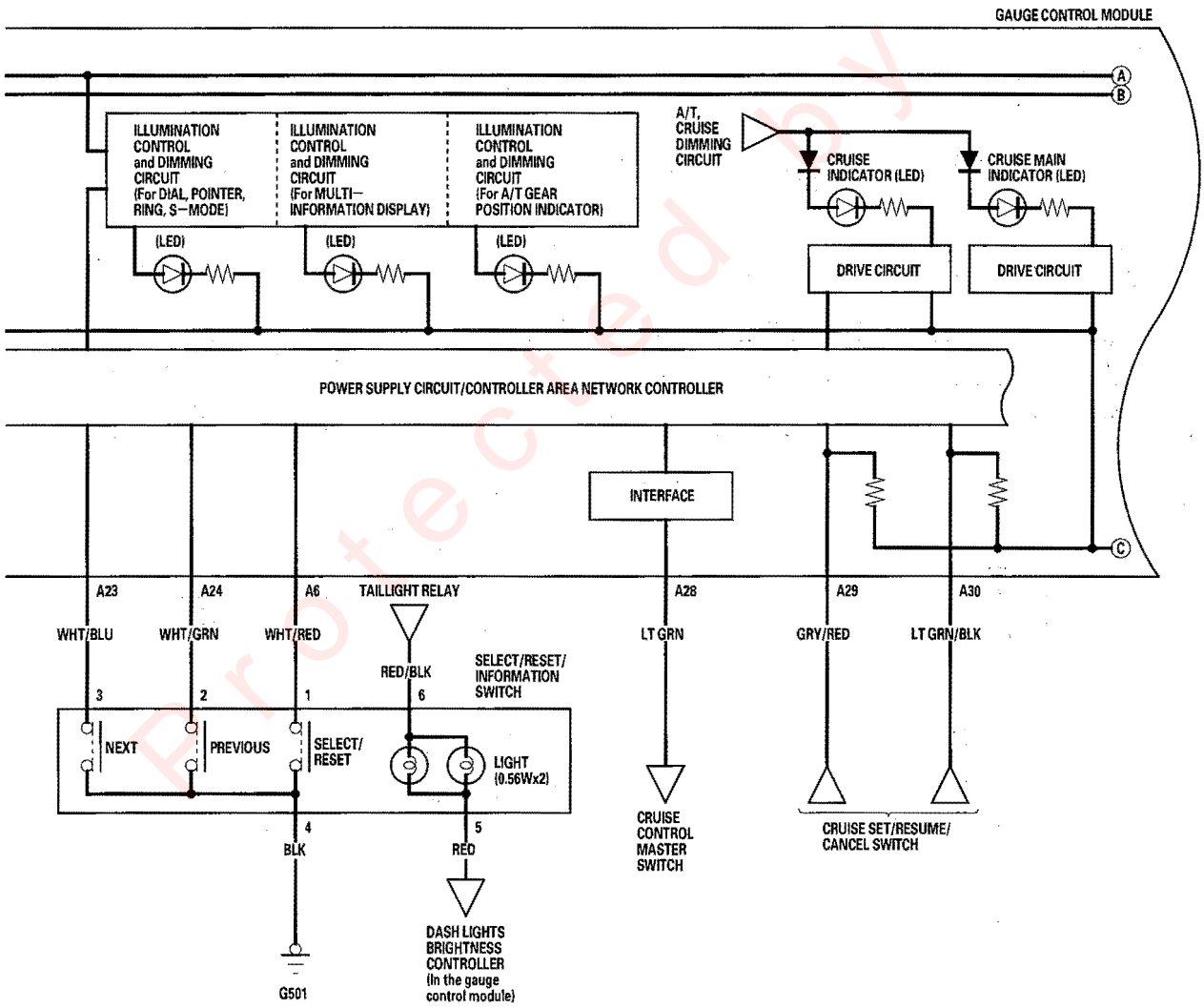

Protected by AR

(cont'd)

Circuit Diagram (cont'd)

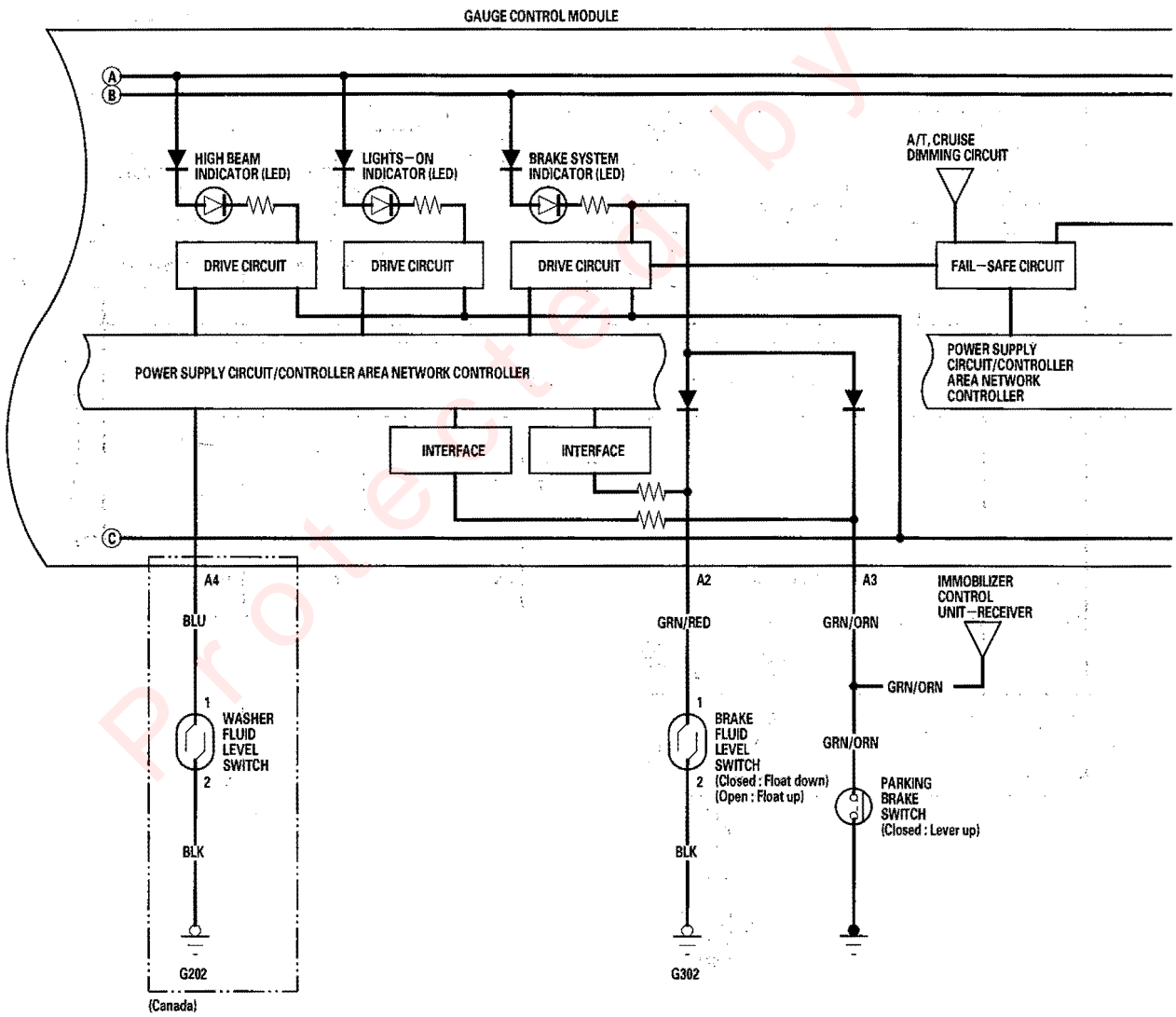

Protected by A R

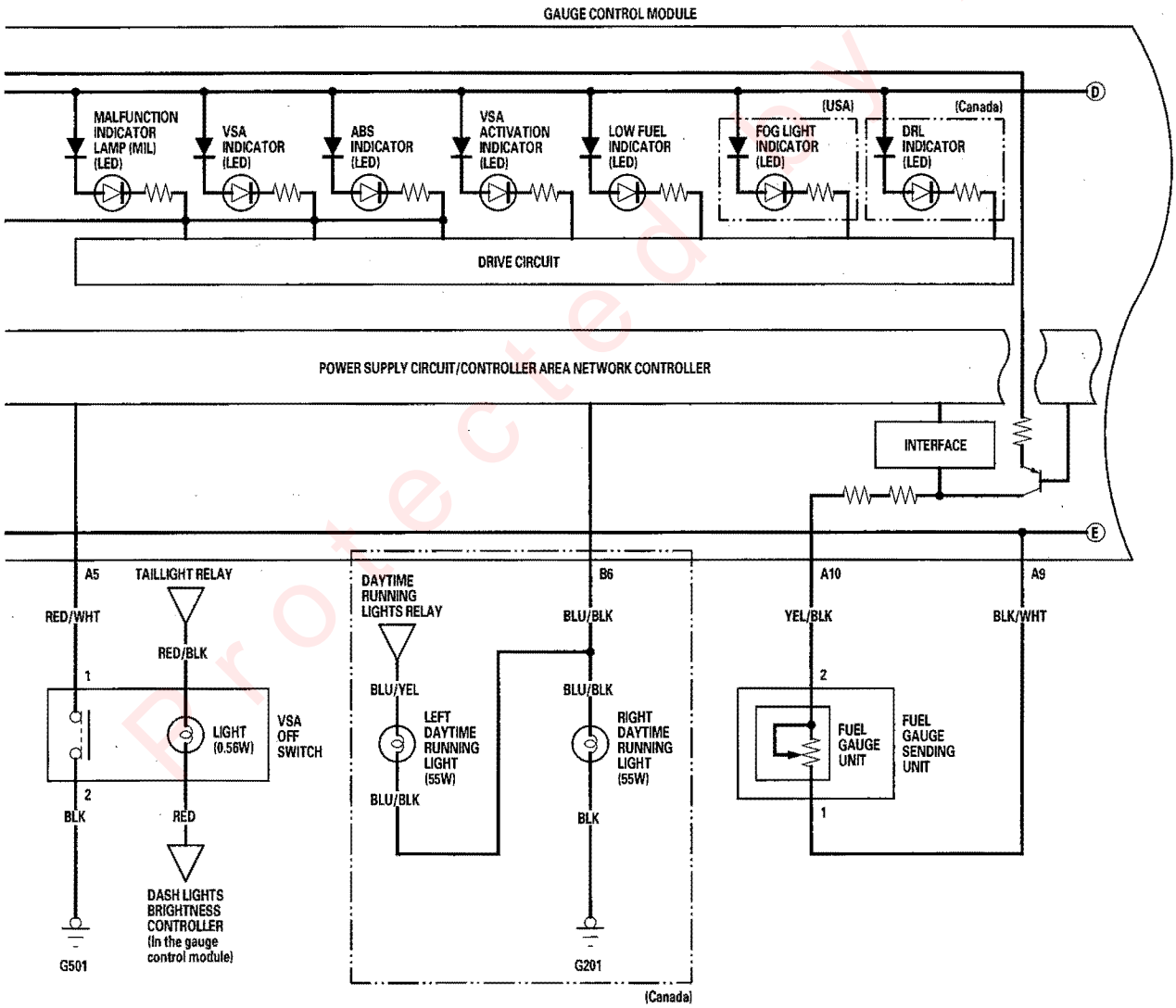
GAUGE CONTROL MODULE
MALFUNCTION INDICATOR LAMP (MIL) (LED)
VSA INDICATOR (LED)
ABS INDICATOR (LED)
VSA ACTIVATION INDICATOR (LED)
LOW FUEL INDICATOR (LED)
(USA)
FOG LIGHT INDICATOR (LED)
(Canada)
DRL INDICATOR (LED)
D
DRIVE CIRCUIT
POWER SUPPLY CIRCUIT/CONTROLLER AREA NETWORK CONTROLLER
INTERFACE
E
A5
TAILLIGHT RELAY
RED/WHT
RED/BLK
1
LIGHT (0.56W)
VSA OFF SWITCH
2
BLK
RED
DASH LIGHTS BRIGHTNESS CONTROLLER (In the gauge control module)
G501
DAYTIME RUNNING LIGHTS RELAY
B6
BLU/BLK
BLU/YEL
LEFT DAYTIME RUNNING LIGHT (55W)
BLU/BLK
BLU/BLK
RIGHT DAYTIME RUNNING LIGHT (55W)
BLK
G201
(Canada)
A10
YEL/BLK
2
FUEL GAUGE UNIT
FUEL GAUGE SENDING UNIT
1
A9
BLK/WHT

(cont'd)

Circuit Diagram (cont'd)

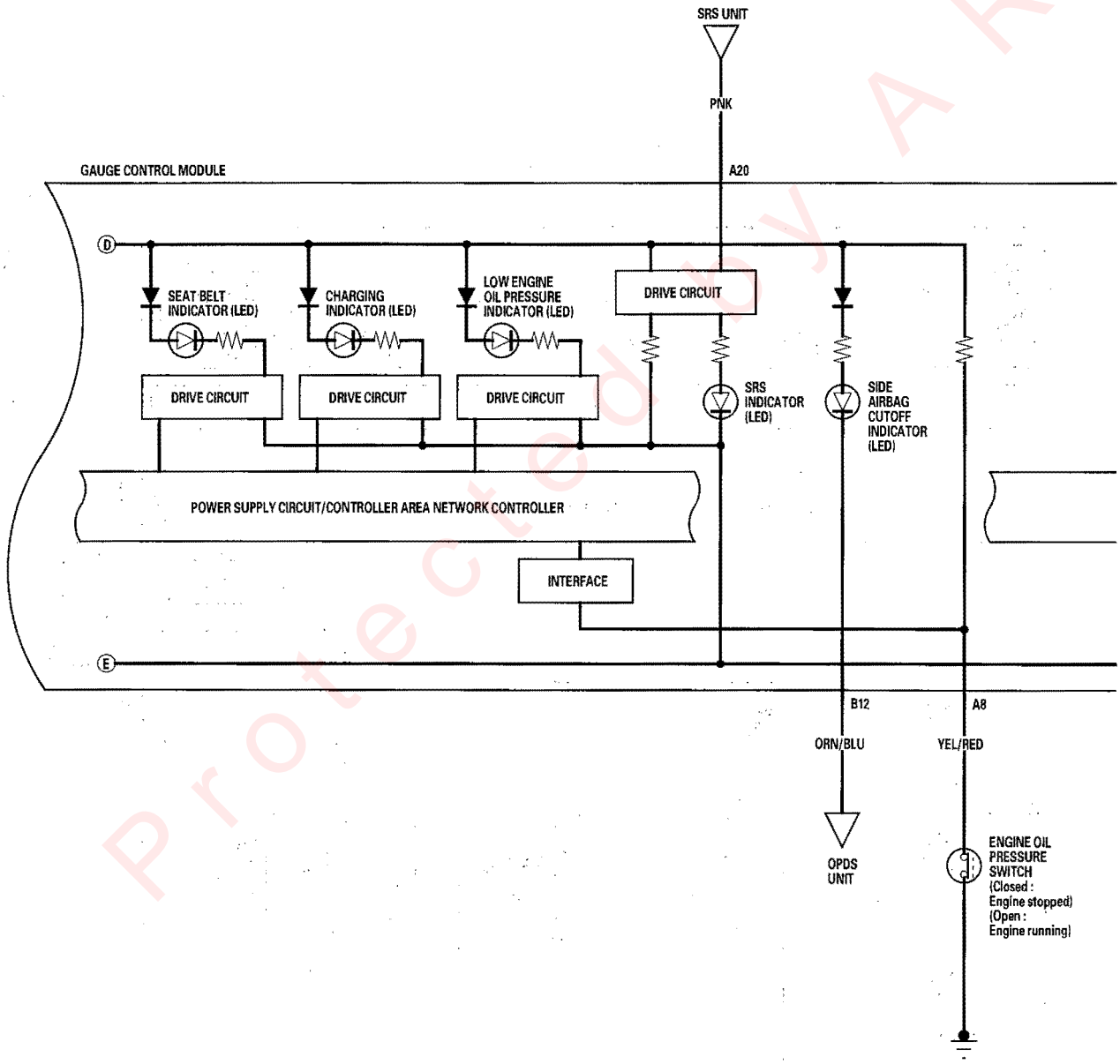

Protected by AR

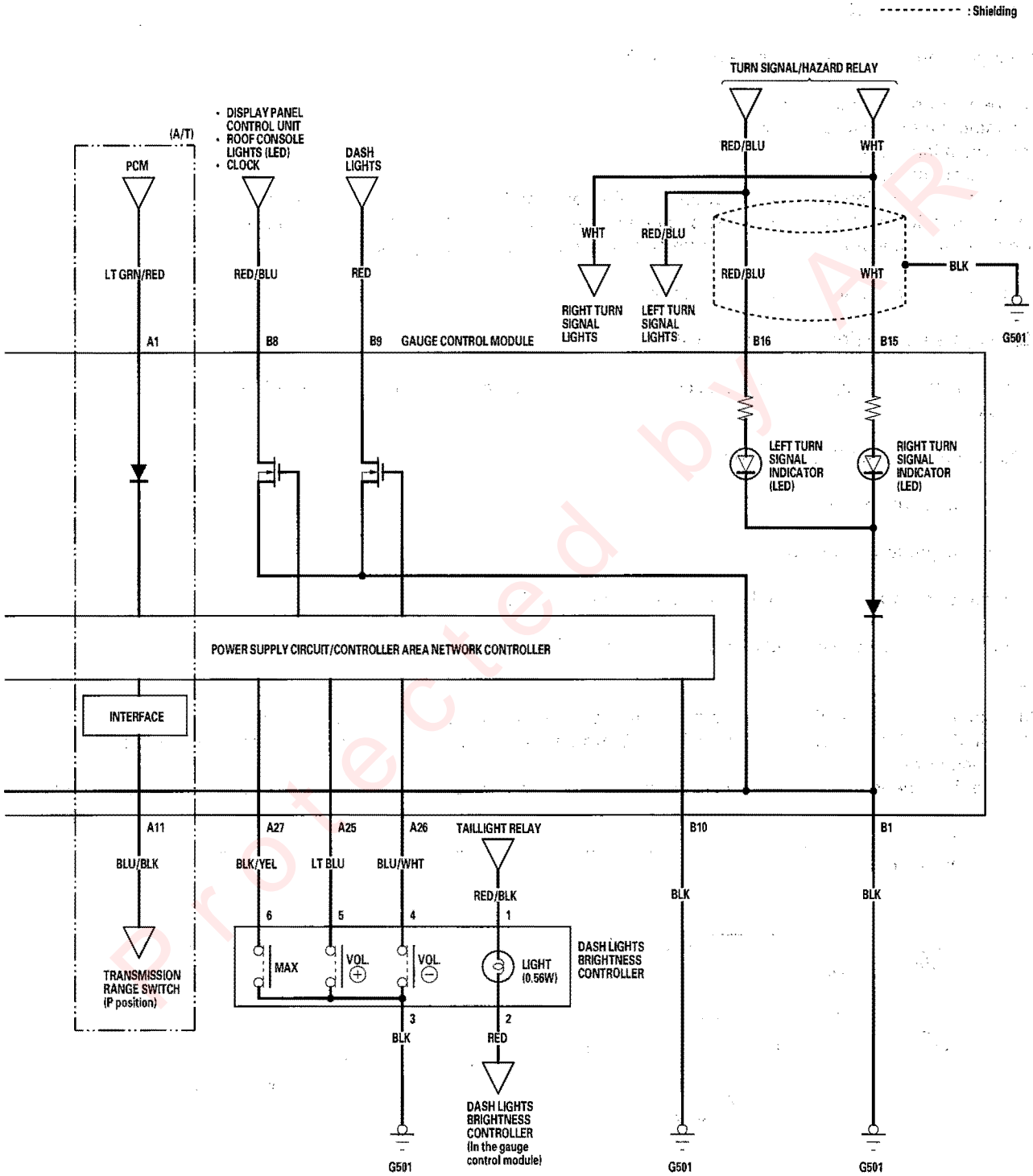

Protected by AR

Self-diagnostic Function

Before troubleshooting the gauge system, refer to multiplex integrated control system B-CAN System Diagnosis Test Mode A (see page 22-108).

The gauge control module has a self-diagnosis function.

- The beeper drive circuit check.
- The indicator drive circuit check.
- The switch input test.
- The LCD segments check.
- The gauges drive circuit check (Speedometer, Tachometer, Fuel gauge, Coolant temperature gauge).
- The communication line check (of the body-controller area network (B-CAN) communication line and the fast-controller area network (F-CAN) communication line between the gauges).

NOTE: Indicators are also controlled via the communication line.

Entering the self-diagnosis function

Before doing the self-diagnosis function, check the No. 7 (7.5A) fuse and the No. 21 (7.5A) fuse in the under-dash fuse/relay box.

1. Push and hold the SELECT button.
2. Turn the headlights ON.
3. Turn the ignition switch ON (II).
4. Within 5 sec., turn the headlights OFF, then ON and OFF again.
5. Within 5 sec., release the SELECT button, and then push and release the button three times repeatedly.

NOTE:
- While in the self-diagnosis mode, the dash lights brightness controller operates normally.
- While in the self-diagnosis mode, the SELECT button is used to start the Beeper Drive Circuit Test and the Gauge Drive Cicuit Check.
- If the vehicle speed exceeds 1.2 mph (2 km/h) or the ignition switch is turned OFF, the self-diagnosis mode ends.

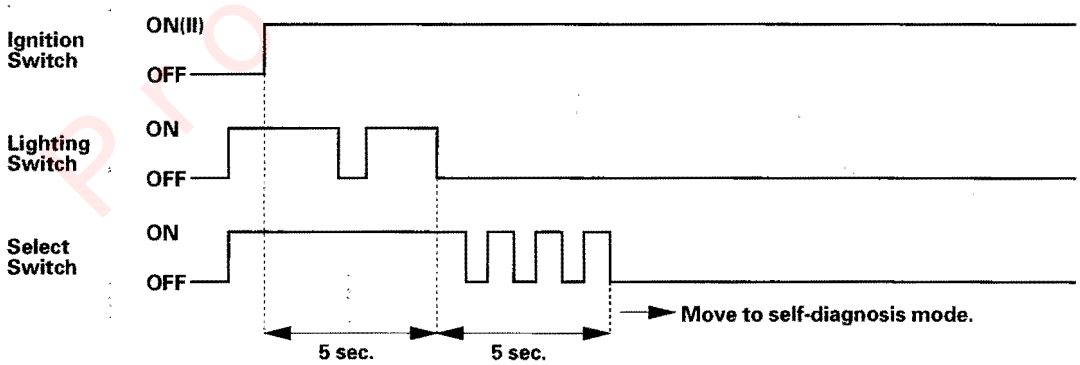

Protected by AR

The Indicator Drive Circuit Check

When entering the self-diagnosis mode, the following indicators blink:
Seat belt indicator, charging system indicator, low fuel indicator, oil pressure indicator, high beam indicator, DRL indicator (Canada), VSA indicator, VSA activation indicator, brake system indicator, fog light indicator, lights on indicator, malfunction indicator lamp (MIL), A/T gear position indicator, ABS indicator, cruise main indicator and cruise set indicator.

Switch Input Check

After the intermittent beeper sounds at the initial stage of self-diagnoisis, a beeper sounds continuously while any of the following switch inputs are switched from OFF to ON:
Parking brake switch, VSA OFF switch, cruise control master, SET, RESUME switches, select, previous, next switches, and dash lights brightness controller (cancel, VOL (+), VOL (−))

The Beeper Drive Circuit Check

When entering the self-diagnosis mode, the beeper sounds five times.

The LCD [Sport shift and multi-information display (MID)] Segment Check

When entering the self-diagnosis mode, the all segments blink five times.

The Gauge Drive Circuit Check

When entering the self-diagnosis mode, the speedometer, the tachometer, the fuel gauge, and the coolant temperature gauge needles sweep from the minimum position to maximum position, then return to the minimum position.

NOTE:
After the beeper stops sounding and the gauge needles return to the minimum position, pushing the select/reset button starts the Beeper Drive Circuit Check (one beep) and the Gauge Drive Circuit Check again.
The check cannot be started again until the gauge needles return to the minimum position.

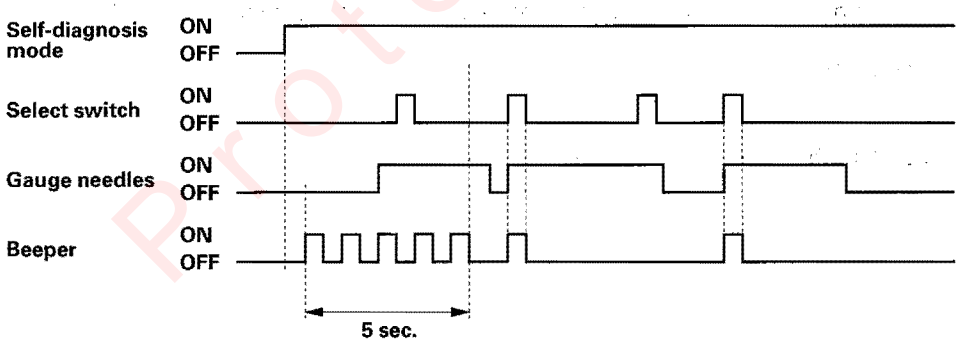

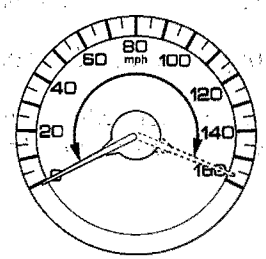

The needles sweep from the minimum position to the maximum position, then return to the minimum position.

If a needle fails to sweep or the beeper does not sound, replace the gauge control module.

(cont'd)

Self-diagnostic Function (cont'd)

The Communication Line Check

While in the self-diagnosis mode, the Communication Line Check starts after the LCD Segments Check.
If all segments come on, the communication line is OK. If there is a communication line error, the word "Error" will be indicated on the multi-information display followed by a number.

- If the word "Error 1" is indicated, there is a malfunction in the communication line between the gauge control module and the fast-controller area network (F-CAN). Check for DTCs in the ECM/PCM and troubleshoot any DTCs found. If no DTCs are found, go to B-CAN System Diagnosis Test Mode A (see page 22-108).
- If the word "Error 2" is indicated, there is a malfunction in the communication line between the gauge control module and the body-controller area network (B-CAN). Go to B-CAN System Diagnosis Test Mode A (see page 22-108). (B1155 or B1161 set).
- If the word "Error 3" is indicated, there is a malfunction in the communication line between the gauge control module and the body-controller area network (B-CAN) and the fast-controller area network (F-CAN). Check for DTCs in the ECM/PCM and troubleshoot any DTCs found. If no DTCs are found, go to B-CAN System Diagnosis Test Mode A (see page 22-108).

Faulty (example Error 1):



If any communicaiton line errors are found, go to B-CAN System Diagnosis Test Mode A (see page 22-108).

Ending the self-diagnosis function

Turn the ignition switch OFF.
NOTE: If the vehicle speed exceeds 1.2 mph (2 km/h), the self-diagnosis function ends.

Protected by

Gauge Control Module Replacement

1. Remove the instrument panel (see page 20-82).
2. Remove the screws from the gauge control module (A), and spread a protective cloth (B) on the upper column cover.

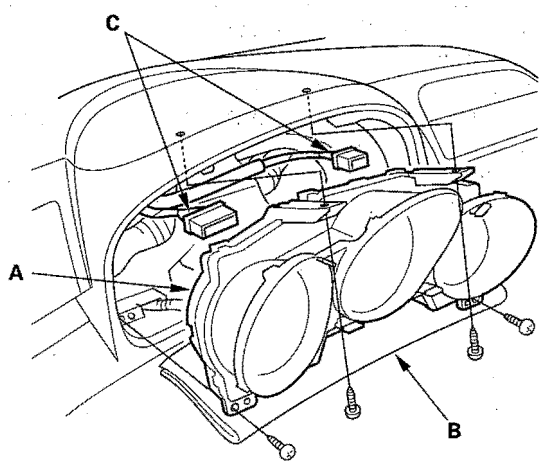

3. Disconnect the connectors (C), and remove the gauge control module.
4. Install the gauge in the reverse order or removal.

Rewriting the ODO Data on a New Gauge Control Module

NOTE:
- If the HDS retrieves the ODO data from the gauge control module, the ODO value on the multi-information display will appear as "— — —", making the ODO function unusable, and the HDS will be unable to retrieve additional ODO values.
- Rewriting is not possible on a gauge control module that does not communicate.
- Obtain a new gauge control module before starting the rewriting process.

1. Before replacing the gauge control module, connect the HDS to the data link connector.
2. Select GAUGES from the BODY ELECTRICAL SYSTEM SELECT MENU display.
3. Select "Gauge Control Module Replacement (ODO rewrite)" from the ADJUSTMENT MENU, and follow the instructions on the display to retrieve the ODO value.
4. Replace the gauge control module.
5. Follow the instructions on the display to write the new ODO value to the new gauge control module.

Protected by A R

Outside Air Temperature Indicator Calibration

NOTE: To test the outside air temperature sensor (see page 21-64).

Description

The outside temperature sensor is located behind the center of the front bumper. The gauge control module uses measurements from this sensor to display the outside air temperature.
Because of the location of the sensor, it may be affected by heat reflection from the road, engine and radiator heat or hot exhaust from surrounding traffic.
These conditions can heat soak the outside air temperature sensor and cause inaccurate readings.
Logic has been written into the gauge control module to help prevent abnormal of fluctuating outside air temperature indicator readings.

Outside Air Temprature Indicator Logic

Initial outiside air temperature indication after the ignition switch is turned ON (II).
If the engine coolant temperature is 110℉ (60℃) or higher when the ignition switch is turned ON (II), the outside air temperature indicated the last time the key was turned off will be displayed regardless of the current temperature measured by the outside air temperature sensor.

If the engine coolant temperature is 139℉ (59℃) or lower when the ignition switch is turned ON (II), the current temperature measured by the outside air temperature sensor will be indicated.

Update to the outside air temperature indicator while driving

If the temperature measured by the outside air temperature sensor is greater than the temperature on the outside air temperature indicator, the outside temperature indicator will increase by 1℉ (1℃) per minute after the vehicle speed is greater than 19 mph (30 km/h) for more than 30 seconds. It will continue to increase until the current outside air temperature is indicated. So, the first change to the outside air temperature indicator is 1 minute and 30 seconds after the vehicle speed is greater than 19 mph (30 km/h). If the vehicle speed drops below 19 mph (30 km/h), the indicator will not update again until the vehicle speed is increased to 19 mph (30 km/h) or more for more than 1 minute and 30 seconds again.

If the outside air temperature is less than the indicated temperature, the temperature will decrease 1℉ (1℃) every 2 seconds until the current outside air temperature is indicated regardless of vehicle speed.

Troubleshooting

If the indicator displays "— — —" for more than 2 seconds after selecting the outside air temperature display mode, check the climate control system or multiplex integrated control system for DTCs (see B-CAN System Diagnosis Test Mode A) (see page 22-108).

Protected by

Calibration

The outside air temperature indicator's displayed temperature can be recalibrated ±3° to meet the customer's expectations.

1. Turn the ignition switch ON (II).
2. Select the outside air temperature display and press and hold the SELECT/RESET button for 10 seconds. While you continue to hold the button, the display will scroll through temperature settings from +3° to −3° as shown.

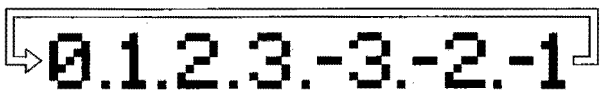

3. When the desired correction value appears on the display, release the button, and the recalibrated outside air temperature will be displayed. Each time a desired correction valve is entered, it replaces the previous valve.

Example:
Incorrect value = 68°F (20°C)

Desired correction valve = +2°F (+1°C)
Correct valve = 70°F (21°C)

Desired correction valve = −2°F (−1°C)
Correct valve = 66°F (19°C)

NOTE: To recalibrate the display to the true temperature, remove the outside air temperature sensor (A), but leave it connected. Submerge the sensor and a thermometer (B) in a container of ice water (C). Select the calibration mode as described above, then recalibrate the display to the true temperature.

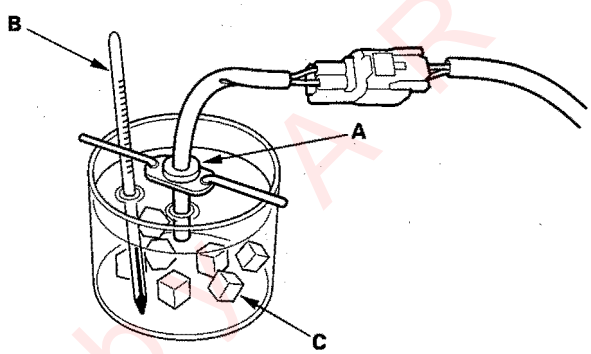

Protected by ARR

Select/Reset/Information Switch Test/Replacement

1. Remove the instrument panel (see page 20-82).
2. Disconnect the 6P connector (A) from the select/reset/information switch (B).

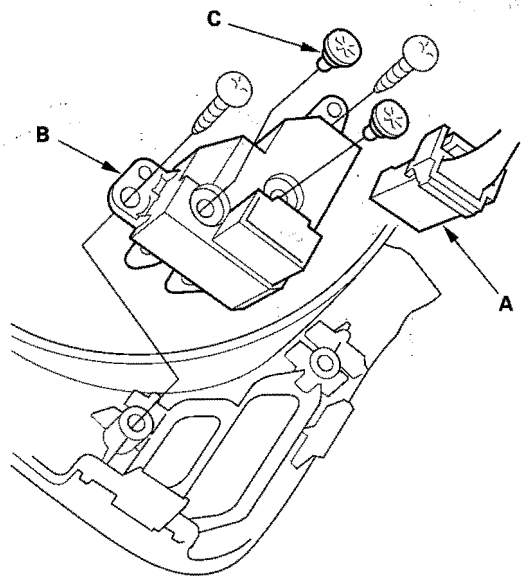

3. Remove the two screws and the select/reset/information switch.
4. Check for continuity between the terminal in each switch position according to the table.

Terminal / Position	1	2	3	4	5		6
Select/Reset	○			○	○	○	○
Next (→)			○	○	○	○	○
Previous (←)		○		○	○	○	○

5. If the continuity is not as specified, replace the bulbs (C) or the switch.

DTC Troubleshooting

DTC B1152: Gauge Control Module EEPROM Error

NOTE: If you are troubleshooting multiple DTCs, be sure to follow the instructions in B-CAN system diagnosis test mode A (see page 22-108).

1. Clear the DTCs with the HDS.
2. Start the engine.
3. Check for DTCs with the HDS.

   Is DTC B1152 indicated?

   YES—Faulty gauge control module; replace the gauge control module (see page 22-265). ■

   NO—Intermittent failure, the gauge control module is OK at this time. Check pinfits and connections. If the connections are good, check the battery condition (see page 22-74), and the charging system (see page 4-25). ■

Protected by A R

DTC B1155: Gauge Control Module Lost Communication with the Combination Switch Control Unit (Headlight Switch Message)

NOTE: If you are troubleshooting multiple DTCs, be sure to follow the instructions in B-CAN system diagnosis test mode A (see page 22-108).

1. Clear the DTCs with the HDS.
2. Turn the ignition switch OFF, and then back ON (II).
3. Check for DTCs with the HDS.

   Is DTC B1155 indicated?

   YES—Go to step 4.

   NO—Intermittent failure. The gauge control system is OK at this time. Check pinfits and connections. ■
4. Check for DTCs with the HDS.

   Is DTC B1007 or B1062 indicated?

   YES—Go to Combination Switch Control Unit Input Test (see page 22-136). ■

   NO—Go to Gauge Control Module Input Test (see page 22-134). ■

DTC B1156: Gauge Control Module Lost Communication with the Combination Switch Control Unit (Wiper Switch Message)

NOTE: If you are troubleshooting multiple DTCs, be sure to follow the instructions in B-CAN system diagnosis test mode A (see page 22-108).

1. Clear the DTCs with the HDS.
2. Turn the ignition switch OFF, and then back ON (II).
3. Check for DTCs with the HDS.

   Is DTC B1156 indicated?

   YES—Go to step 4.

   NO—Intermittent failure. The gauge control system is OK at this time. Check pinfits and connections. ■
4. Check for DTCs with the HDS.

   Is DTC B1063 indicated?

   YES—Go to Combination Switch Control Unit Input Test (see page 22-136). ■

   NO—Go to Gauge Control Module Input Test (see page 22-134). ■

Protected by AR

DTC Troubleshooting (cont'd)

DTC B1157: Gauge Control Module Lost Communication with Multiplex Integrated Control Unit (MICU)

NOTE: If you are troubleshooting multiple DTCs, be sure to follow the instructions in B-CAN system diagnosis test mode A (see page 22-108).

1. Clear the DTCs with the HDS.
2. Turn the ignition switch OFF, and then back ON (II).
3. Check for DTCs with the HDS.

   Is DTC B1157 indicated?

   YES—Go to step 4.

   NO—Intermittent failure. The gauge control system is OK at this time. Check pinfits and connections.■
4. Check for DTCs with the HDS.

   Is DTC B1055, B1255 and B1806 indicated?

   YES—Go to Multiplex Integrated Control Unit Input Test (see page 22-130).

   NO—Go to Gauge Control Module Input Test (see page 22-134).

DTC B1158: Gauge Control Module Lost Communication with Relay Control Module

NOTE: If you are troubleshooting multiple DTCs, be sure to follow the instructions in B-CAN system diagnosis test mode A (see page 22-108).

1. Clear the DTCs with the HDS.
2. Turn the ignition switch OFF, and then back ON (II).
3. Check for DTCs with the HDS.

   Is DTC B1158 indicated?

   YES—Go to step 4.

   NO—Intermittent failure. The gauge control system is OK at this time. Check pinfits and connections.■
4. Check for DTCs with the HDS.

   Is DTC B1005 indicated?

   YES—Go to Relay Control Module Input Test (see page 22-137).

   NO—Go to Gauge Control Module Input Test (see page 22-134).

Protected by AR

DTC B1159: Gauge Control Module Lost Communication with the Multiplex Integrated Control Unit (MICU) (Door Switch Message)

NOTE: If you are troubleshooting multiple DTCs, be sure to follow the instructions in B-CAN system diagnosis test mode A (see page 22-108).

1. Clear the DTCs with the HDS.
2. Turn the ignition switch OFF, and then back ON (II).
3. Check for DTCs with the HDS.

   Is DTC B1159 indicated?

   YES—Go to step 4.

   NO—Intermittent failure. The gauge control system is OK at this time. Check pinfits and connections. ■
4. Check for DTCs with the HDS.

   Is DTC B1057 or B1807 indicated?

   YES—Go to Multiplex Integrated Control Unit Input Test (see page 22-130).

   NO—Go to Gauge Control Module Input Test (see page 22-134).

DTC B1160: Gauge Control Module Lost Communication with the Door Multiplex Control Unit (Door Lock Switch Message)

NOTE: If you are troubleshooting multiple DTCs, be sure to follow the instructions in B-CAN system diagnosis test mode A (see page 22-108).

1. Clear the DTCs with the HDS.
2. Turn the ignition switch OFF, and then back ON (II).
3. Check for DTCs with the HDS.

   Is DTC B1160 indicated?

   YES—Go to step 4.

   NO—Intermittent failure. The gauge control system is OK at this time. Check pinfits and connections. ■
4. Check for DTCs with the HDS.

   Is DTC B1006 or B1058 indicated?

   YES—Go to Door Multiplex Control Unit Input Test (see page 22-135).

   NO—Go to Gauge Control Module Input Test (see page 22-134).

Protected by A R

DTC Troubleshooting (cont'd)

DTC B1168: Gauge Control Module Lost Communication with ECM/PCM (Engine Messages)

NOTE: If you are troubleshooting multiple DTCs, be sure to follow the instructions in B-CAN system diagnosis test mode A (see page 22-108).

1. Clear the DTCs with the HDS.
2. Turn the ignition switch OFF, and then back ON (II).
3. Start and run the engine for at least 5 seconds then turn the engine off.
4. Check for DTCs with the HDS.

   Is DTC B1168 indicated?

   YES—Go to step 5.

   NO—Intermittent failure, the F-CAN communication line is OK at this time. Check for loose or poor connections. If the connections are good, check the battery condition (see page 22-74) and the charging system (see page 4-25).■
5. Check for DTCs in the ECM/PCM with the HDS.

   Are any DTCs indicated?

   YES—Go to the indicated DTCs troubleshooting.

   NO—Go to step 6.
6. Do the Gauge Control Module Input Test (see page 22-134).

   Are all inputs OK?

   YES—Go to step 7.

   NO—Repair the faulty input, then recheck the DTCs.■
7. Substitute a known-good gauge control module.
8. Clear the DTCs with the HDS.
9. Turn the ignition switch OFF, and then back ON (II).
10. Start and run the engine for at least 5 seconds then turn the engine off.
11. Check for DTCs with the HDS.

    Is DTC B1168 indicated?

    YES—Replace the ECM/PCM.■

    NO—The original gauge control module is faulty; replace it (see page 22-265).■

Protected by AR

DTC B1169: Gauge Control Module Lost Communication with ECM/PCM (A/T Messages)

NOTE: If you are troubleshooting multiple DTCs, be sure to follow the instructions in B-CAN system diagnosis test mode A (see page 22-108).

1. Clear the DTCs with the HDS.
2. Turn the ignition switch OFF, and then back ON (II).
3. Start and run the engine for at least 5 seconds then turn the engine off.
4. Check for DTCs with the HDS.

   Is DTC B1169 indicated?

   YES—Go to step 5.

   NO—Intermittent failure, the F-CAN communication line is OK at this time. Check for loose or poor connections. If the connections are good, check the battery condition (see page 22-74) and the charging system (see page 4-25).■
5. Check for DTCs in the ECM/PCM with the HDS.

   Are any DTCs indicated?

   YES—Go to the ECM/PCM indicated DTCs troubleshooting.

   NO—Go to step 6.
6. Do the Gauge Control Module Input Test (see page 22-134).

   Are all inputs OK?

   YES—Go to step 7.

   NO—Repair the faulty input, then recheck the DTCs.■
7. Substitute a known-good gauge control module.
8. Clear the DTCs with the HDS.
9. Turn the ignition switch OFF, and then back ON (II).
10. Start and run the engine for at least 5 seconds then turn the engine off.
11. Check for DTCs with the HDS.

    Is DTC B1169 indicated?

    YES—Replace the ECM/PCM.■

    NO—The original gauge control module is faulty; replace it (see page 22-265).■

Protected by AR

DTC Troubleshooting (cont'd)

DTC B1175: Fuel Level Sensor (Fuel Gauge Sending Unit) Signals Input Error

NOTE: If you are troubleshooting multiple DTCs, be sure to follow the instructions in B-CAN system diagnosis test mode A (see page 22-108).

1. Do the fuel gauge sending unit test (see page 11-262).

   Is the fuel gauge sending unit OK?

   YES — Go to step 2.

   NO — Replace the fuel gauge sending unit. ■

2. Disconnect the fuel pump/fuel gauge sending unit 5P connector and the gauge control module connector A (30P).

3. Check for continuity between the No. 9 and No. 10 terminals of gauge control module connector A (30P) and No. 1and No. 2 terminals of the fuel pump/fuel gauge sending unit 5P connector.

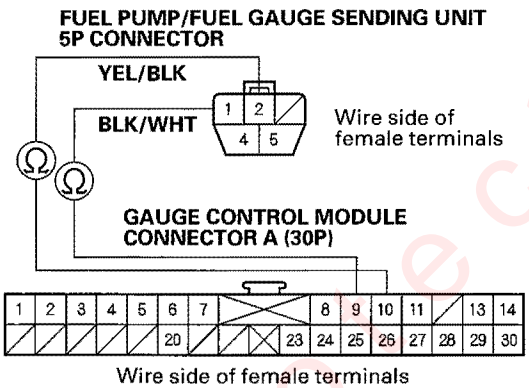

   Is there continuity?

   YES — Go to step 4.

   NO — Repair an open in the BLK/WHT or YEL/BLK wire between the gauge control module and fuel gauge sending unit. ■

4. Check for continuity between the No. 9 and No. 10 terminals of gauge control module connector A (30P) and body ground.

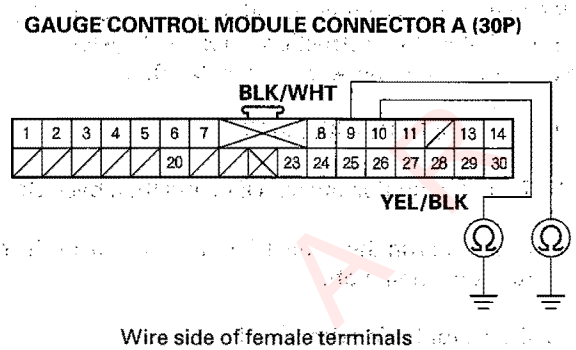

   Is there continuity?

   YES — Repair a short to ground in the BLK/WHT or YEL/BLK wire. ■

   NO — Replace the gauge control module (see page 22-265). ■

Protected by A

DTC B1177: Abnormal Battery Voltage (7.5 V)

NOTE: If you are troubleshooting multiple DTCs, be sure to follow the instructions in B-CAN system diagnosis test mode A (see page 22-108).

1. Clear the DTCs with the HDS.
2. Turn the ignition switch OFF, and then back ON.
3. Check for DTCs with the HDS.

   Is DTC B1177 indicated?

   YES—Go to step 5.

   NO—Go to step 4.
4. Crank the engine.

   Is DTC B1177 indicated?

   YES—Go to step 5.

   NO—Intermittent failure. The gauge control module and power supply voltage (IG1) that is supplied to the gauge control module are OK at this time. The battery may have been discharged, and recovered.■
5. Check the battery (see page 22-74) and the charging system (see page 4-25).

   Is the battery condition normal and the charging system OK?

   YES—Go to step 6.

   NO—Abnormal battery condition which needs a recharge or replacement, or a charging system repair.■
6. With gauge control module connector B (18P) still connected, check for voltage between the No. 18 terminal and body ground.

GAUGE CONTROL MODULE CONNECTOR B (18P)

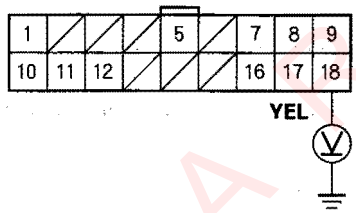

Wire side of female terminals

Is there battery voltage?

YES—Go to step 7.

NO—Repair an open or high resistance in the YEL wire between the gauge control module and under-dash fuse/relay box.■

7. Check for voltage between the No. 10 and No. 18 terminals.

GAUGE CONTROL MODULE CONNECTOR B (18P)

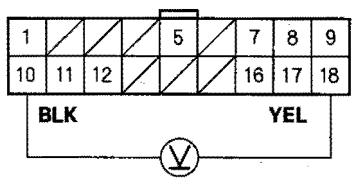

Wire side of female terminals

Is there battery voltage?

YES—Faulty gauge control module; replace the gauge control module (see page 22-265).

NO—Repair an open or high resistance in the BLK wire between the gauge control module and ground (G501).■

Protected by AIR

DTC Troubleshooting (cont'd)

DTC B1178: F-CAN Communication Line Error

NOTE: If you are troubleshooting multiple DTCs, be sure to follow the instructions in B-CAN system diagnosis test mode A (see page 22-108).

1. Clear the DTCs with the HDS.
2. Turn the ignition switch OFF, and then back ON (II).
3. Start and run the engine for at least 5 seconds then turn the engine off.
4. Check for DTCs with the HDS.

   Is DTC B1178 indicated?

   YES—Go to step 5.

   NO—Intermittent failure, the F-CAN communication line is OK at this time. Check for loose or poor connections. If the connections are good, check the battery condition (see page 22-74) and the charging system (see page 4-25).■
5. Check for DTCs in the ECM/PCM with the HDS.

   Are any DTCs indicated?

   YES—Go to the indicated ECM/PCM DTCs troubleshooting.

   NO—Go to step 6.
6. Do the Gauge Control Module Input Test (see page 22-134).

   Are all inputs OK?

   YES—Go to step 7.

   NO—Repair the faulty input, then recheck the DTCs.■
7. Substitute a known-good gauge control module.
8. Clear the DTCs with the HDS.
9. Turn the ignition switch OFF, and then back ON (II).
10. Start and run the engine for at least 5 seconds then turn the engine off.
11. Check for DTCs with the HDS.

    Is DTC B1178 indicated?

    YES—Replace the ECM/PCM.■

    NO—The original gauge control module is faulty; replace it (see page 22-265).■

Protected by AR

Circuit Diagram

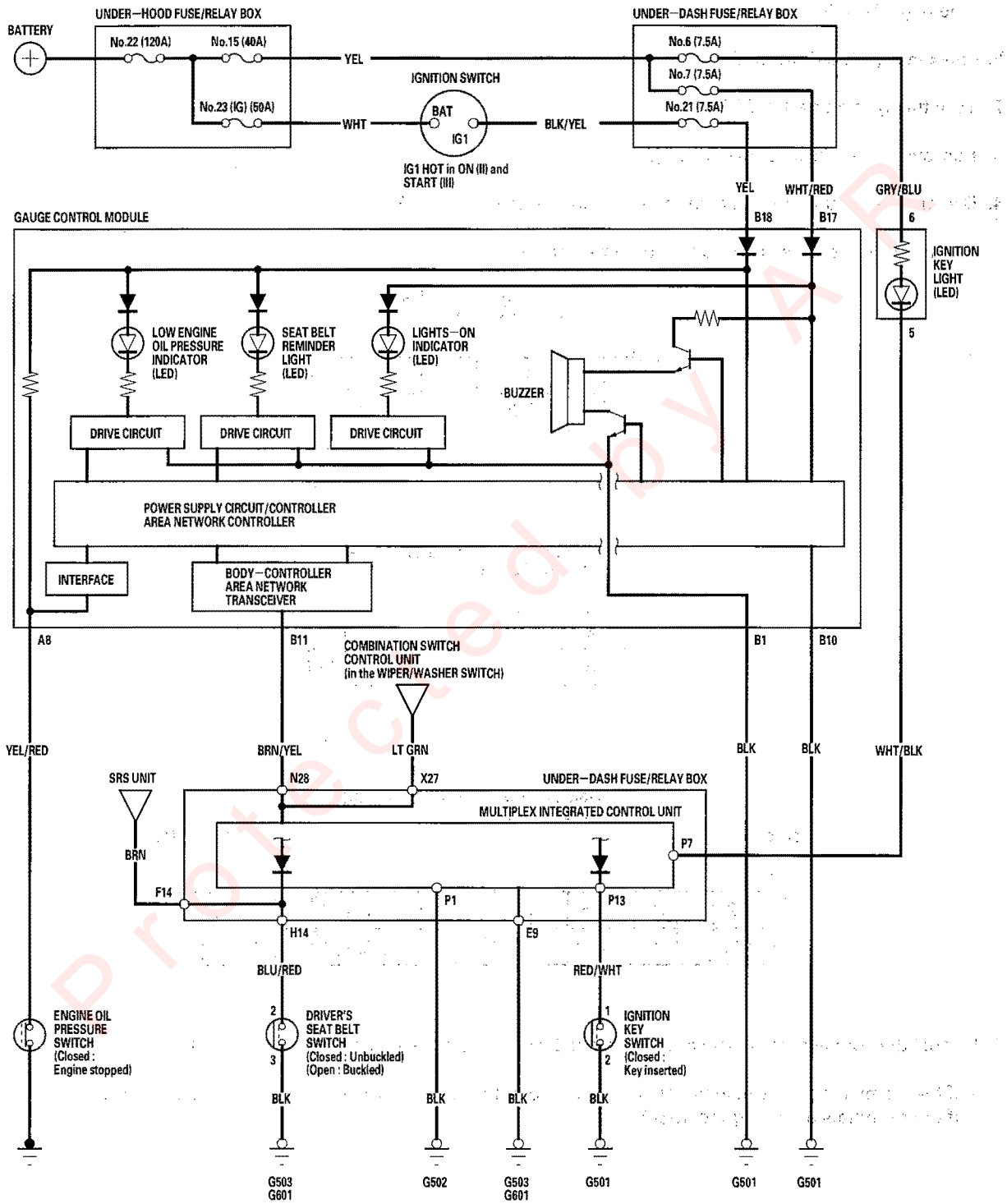

Protected by A

Control Unit Input Test

1. Before testing, troubleshoot the multiplex integrated control system using B-CAN System Diagnosis Test Mode A (see page 22-108).

Multiplex Integrated Control Unit

2. Turn the ignition switch OFF.
3. Remove the left kick panel (see page 20-62).
4. Disconnect the under-dash fuse/relay box connectors F, H and P.

   NOTE: All connectors are wire side of female terminals.

UNDER-DASH FUE/RELAY BOX CONNECTOR F (14P)

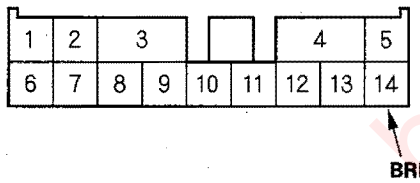

UNDER-DASH FUE/RELAY BOX CONNECTOR H (14P)

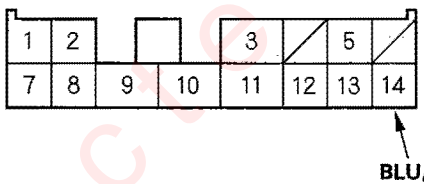

UNDER-DASH FUE/RELAY BOX CONNECTOR P (30P)

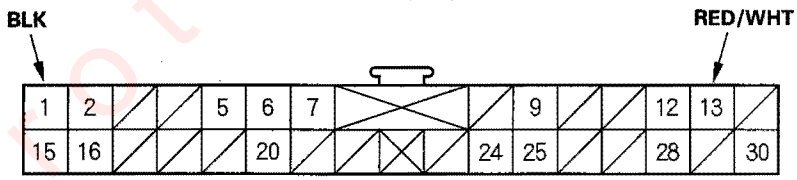

5. Inspect the connector and socket terminals to be sure they are all making good contact.

   - If the terminals are bent, loose or corroded, repair them as necessary, and recheck the system.
   - If the terminals are OK, go to step 6.

Protected by AR

6. Reconnect the connectors. Turn the ignition switch ON (II) and make these input tests at the connector.

   - If any test indicates a problem, find and correct the cause, then recheck the system.
   - If all the input tests prove OK, go to step 7.

Cavity	Wire	Test condition	Test: Desired result	Possible cause if result is not obtained
F14	BRN	Ignition switch ON (II), driver's seat belt is unbuckled.	Check for voltage to ground: There should be 1V or less.	• Faulty driver's seat belt switch • Poor ground (G503, G601) • An open in the wire
H14	BLU/RED	Ignition switch ON (II), driver's seat belt is buckled.	Check for voltage to ground: There should be 5V or more.	• Faulty driver's seat belt switch • Short to ground
P13	RED/WHT	Ignition key in the ignition switch.	Check for voltage to ground: There should be 1V or less.	• Faulty ignition key switch • Poor ground (G501) • An open in the wire
		Ignition key out of the ignition switch.	Check for voltage to ground: There should be 5V or more.	• Faulty ignition key switch • Short to ground

7. Turn the ignition switch OFF.

8. Remove the gauge control module (see page 22-265).

9. Disconnect the gauge control module connectors A and B.

   NOTE: All connectors are wire side of female terminals.

GAUGE CONTROL MODULE CONNECTOR A (30P)

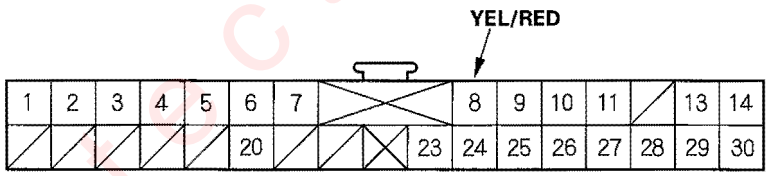

GAUGE CONTROL MODULE CONNECTOR B (18P)

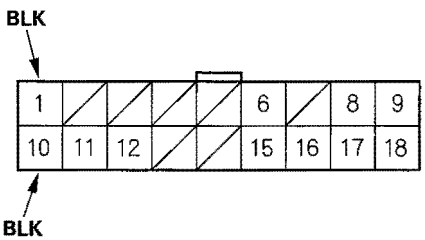

10. Inspect the connector and socket terminals to be sure they are all making good contact.

    - If the terminals are bent, loose or corroded, repair them as necessary, and recheck the system.
    - If the terminals are OK, go to step 11.

(cont'd)

Protected by ARR

Control Unit Input Test (cont'd)

11. With the connectors still disconnected, make these input tests at the connector.

    - If any test indicates a problem, find and correct the cause, then recheck the system.
    - If the input tests prove OK, go to step 12.

Cavity	Wire	Test condition	Test: Desired result	Possible cause if result is not obtained
A8	YEL/RED	Engine OFF	Check for continuity to ground: There shold be continuity.	• Faulty engine oil pressure switch • An open in the wire
		Engine running	Check for continuity to ground: There shold be no continuity.	• Mechanical problem in the engine • Faulty engine oil pressure switch • An open in the wire
B1 . B10	BLK	Under all conditions	Check for continuity to ground: There should be continuity.	• Poor ground (G501) • An open in the wire

12. Reconnect the connectors at the under-dash fuse/relay box and the gauge control module.

13. Perform the Gauge Self-diagnosis Procedure (see page 22-262).

    - If the beeper sounds and the seat belt reminder light flashes, go to step 14.
    - If the beeper does not sound or the seat belt reminder light does not flash, replace the gauge control module.

14. Substitute a known-good gauge control module and recheck the system.

    - If the symptom is gone, the gauge control module is faulty; replace it.
    - If the symptom is still present, the multiplex integrated control unit (MICU) is faulty; replace the under-hood fuse/relay box.

Protected by ...

Rear Window Defogger

Component Location Index

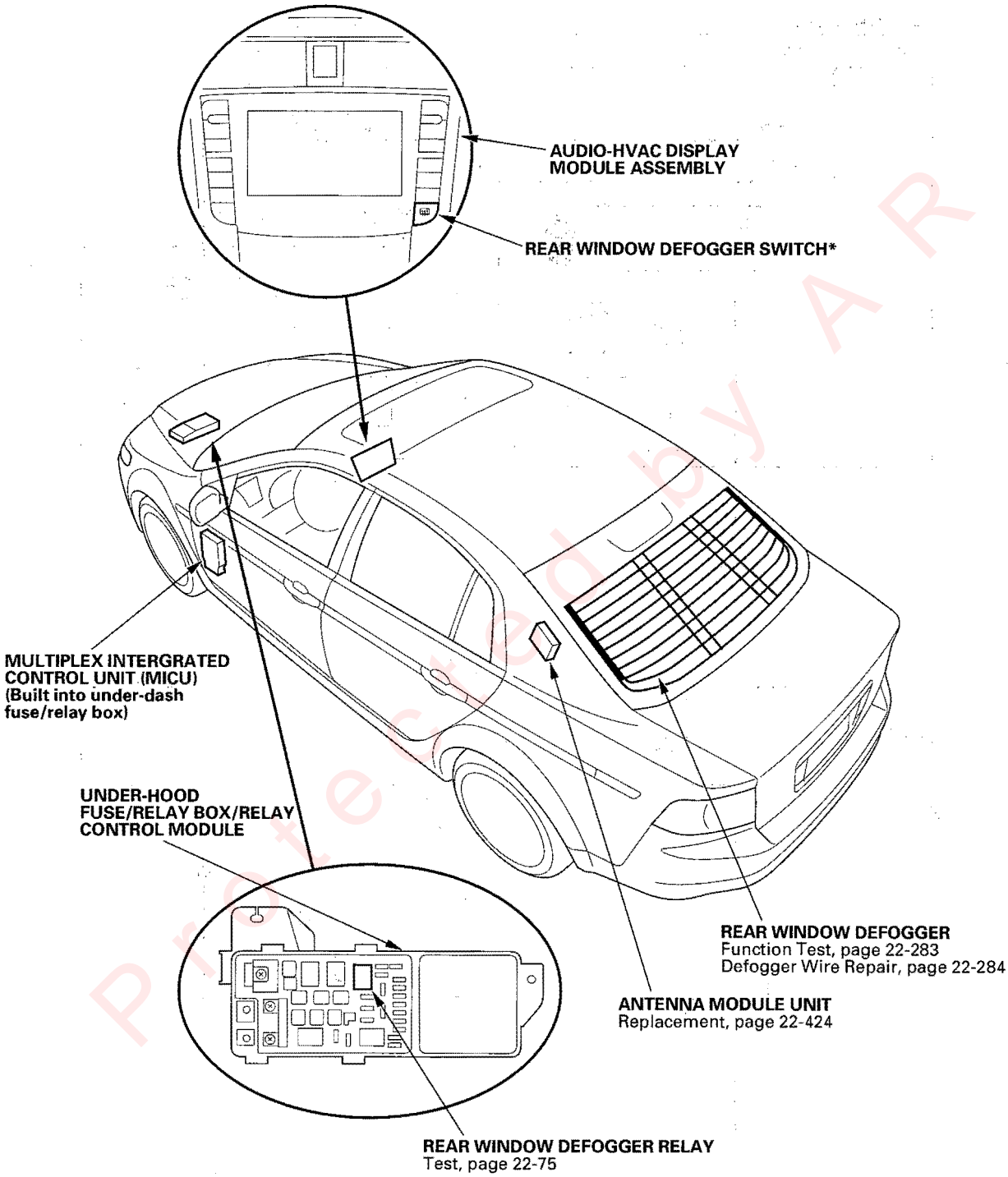

*: Rear window defogger switch is built into the passenger's climate control switch assembly (audio-HVAC display module assembly).

Protected by AR

Rear Window Defogger

Circuit Diagram

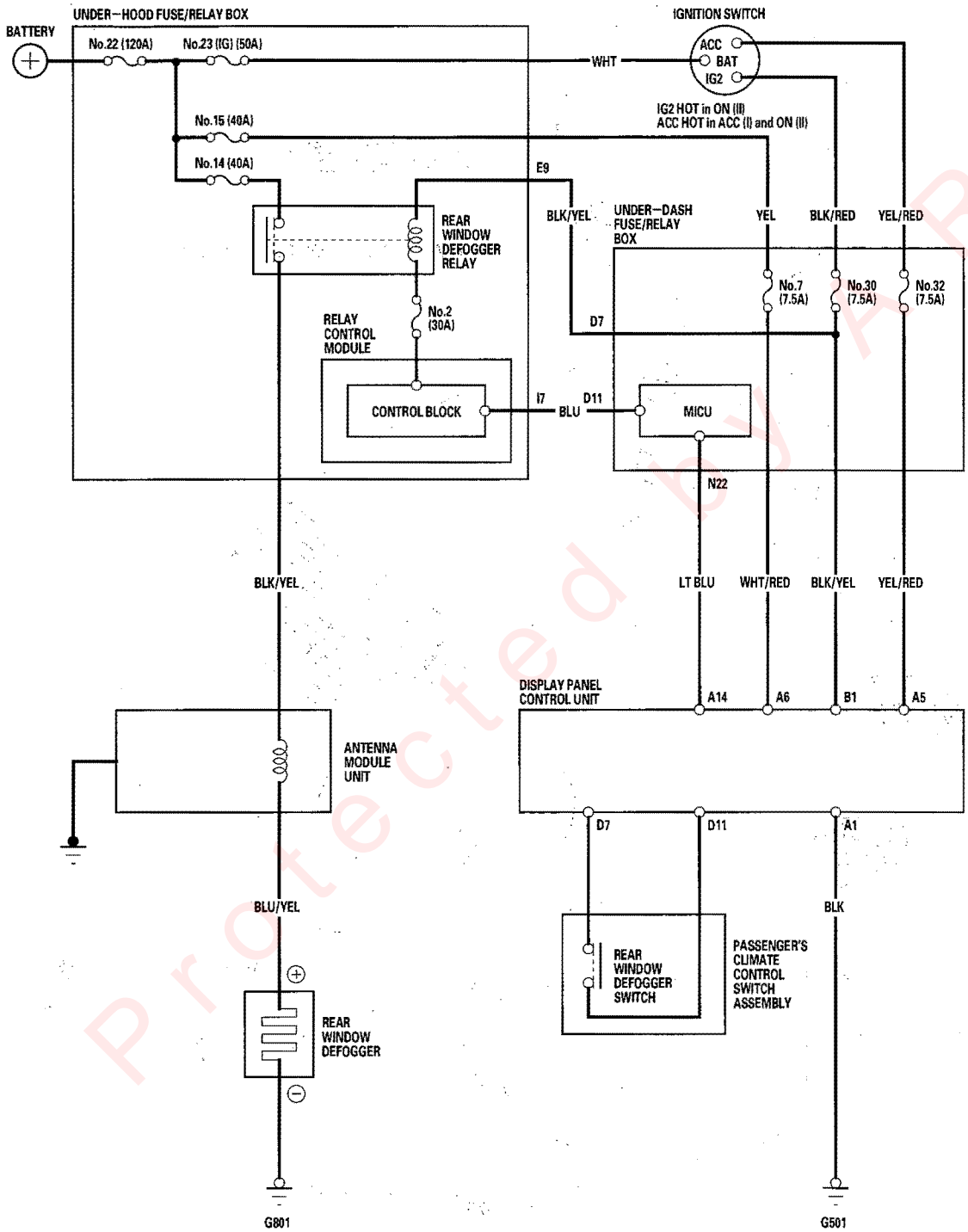

Protected by AR

Function Test

Before troubleshooting the rear window defogger circuit, perform multiplex integrated control system troubleshooting using B-CAN System Diagnosis Test Mode A (see page 22-108).

NOTE:
- Be careful not to scratch or damage the defogger wires with the tester probe.
- Before testing, check the No. 14 (40A) fuse in the under-hood fuse/relay box and No. 7 (7.5A) and No. 30 (7.5A) fuses in the under-dash fuse/relay box.

1. Check for voltage between the positive terminal (A) and body ground with the ignition switch and defogger switch ON.
   There should be battery voltage.

   - If there is no voltage, check for:
     – Faulty rear window defogger relay.
     – Faulty antenna module.
     – Faulty passenger's climate control switch assembly.
     – Faulty display panel control unit
     – An open in the BLK/YEL wire to the positive terminal.
   - If there is voltage, go to step 2.

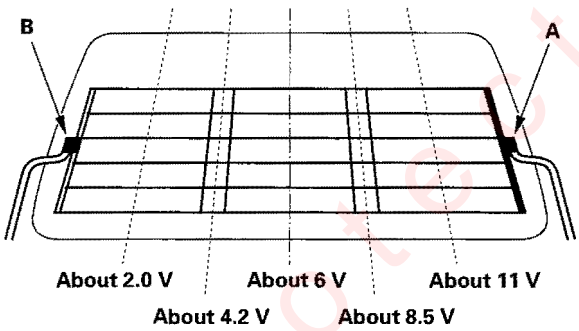

2. Disconnect the negative terminal (B) from the rear window defogger.

3. Check for continuity between the negative terminal (B) and body ground.

   If there is no continuity, check for an open in the wire or poor ground (G801). If there is continuity, go to step 4.

4. Reconnect the negative terminal to the rear window defogger.

5. Turn the ignition switch ON (II) and the rear window defogger switch ON.

6. Touch the voltmeter positive probe to the each points on each defogger wire, and the negative probe to the negative terminal.

   - If the voltage is as specified, the defogger wire up to that point is OK.
   - If the voltage is not as specified, repair the defogger wire.
     – If it is more than specified at one of the points, there is a break in the negative half of the wire.
     – If it is less than specified at one of the points, there is a break in the positive half of the wire.

Protected by JAR

Defogger Wire Repair

NOTE: To make an effective repair, the broken section must be no longer than 1 inch (2.5 mm).

1. Lightly rub the area around the broken section (A) with fine steel wool, then clean it with alcohol.

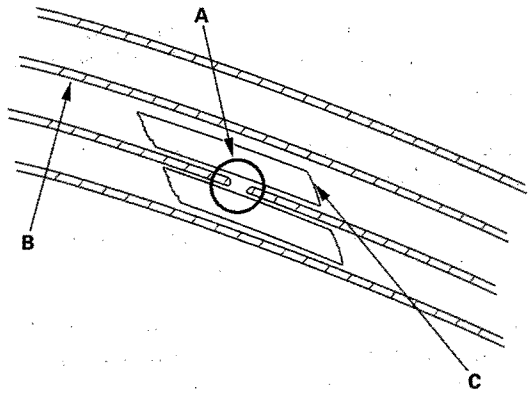

2. Carefully mask above and below the broken portion of the defogger wire (B) with cellophane tape (C).
3. Using a small brush, apply a heavy coat of silver conductive paint (commercially available) extending about 1/8" on both sides of the break. Allow 25 minutes to dry.

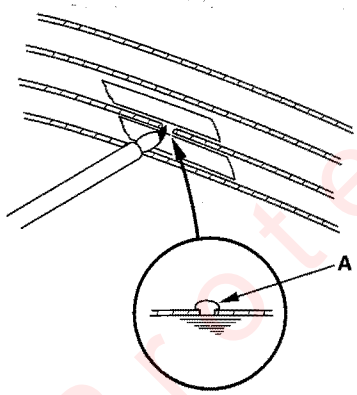

4. Perform the function test to confirm that the wire is repaired.
5. Apply a second coat of paint in the same way. Let it dry 3 hours before removing the tape.

Protected by AR

Component Location Index

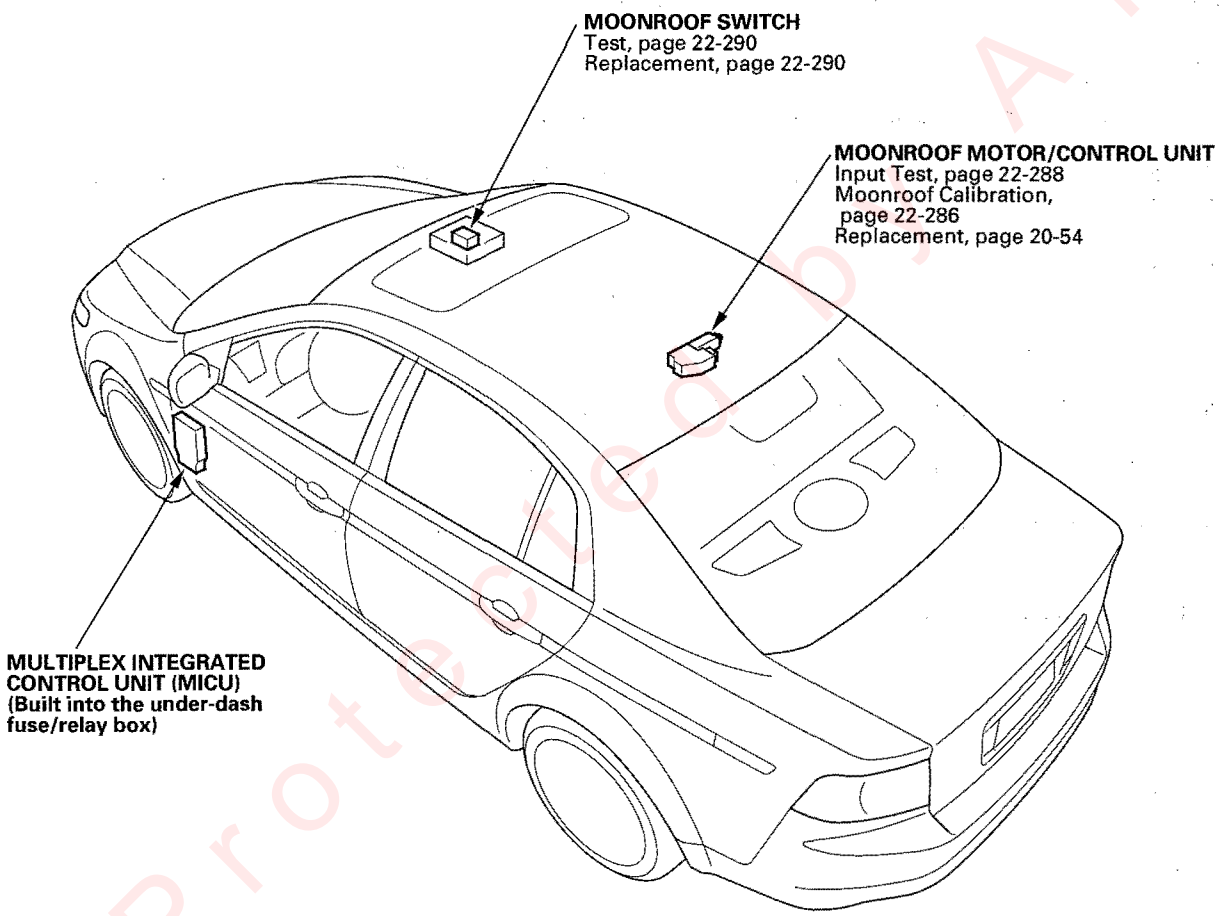

Protected by CARiD

Moonroof Calibration

NOTE: The moonroof calibration must be performed when any of the following events have occurred.
- The moonroof is manually moved with the battery dead or disconnected.
- The moonroof motor is replaced with a new one.
- Any component related to the moonroof replaced.
  - Wind deflector
  - Moonroof glass
  - Moonroof seal
  - Moonroof glass bracket
  - Moonroof cables, etc.

To calibrate the moonroof, perform the following steps

1. Turn the ignition switch ON (II).
2. Open the moonroof to full open position and release the open button.
3. Pull and hold the moonroof OPEN switch until the moonroof glass moves slightly back to its mechanical stop and then forward again slightly.
   - New Motor:
   - Other than new motor: This will take about 13 seconds.
4. Release the OPEN switch.
5. Within 5 seconds, pull and hold the moonroof OPEN switch again.
6. In about 3 seconds the moonroof glass will begin to slide closed.
7. Continue to hold the open button until the glass moves to closed position, tilts up, and returns to the closed position again.
8. Test the moonroof auto operation.

Protected by A R

Circuit Diagram

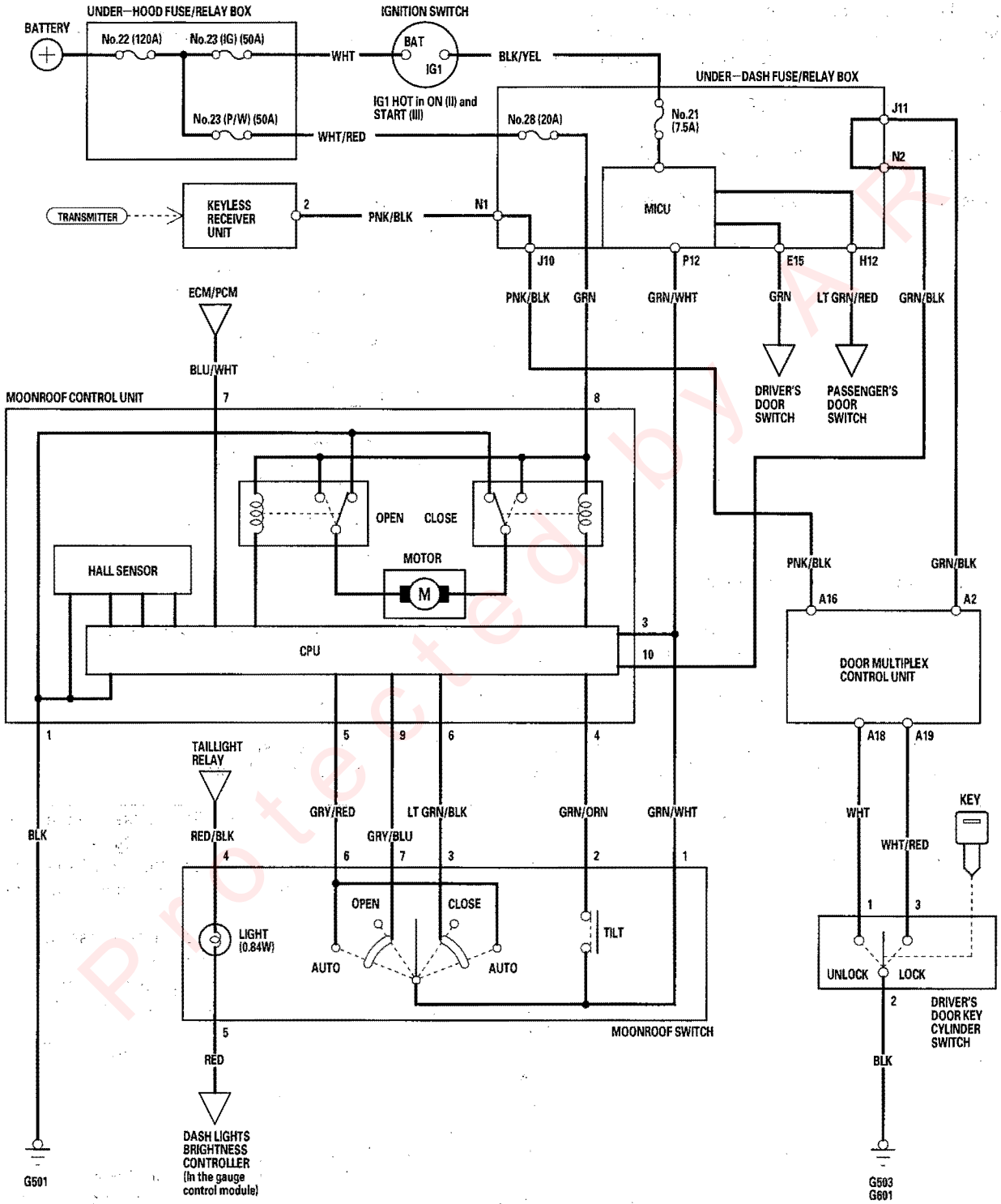

Protected by AR

Moonroof Control Unit Input Test

Before troubleshooting the moonroof circuit, troubleshoot the multiplex integrated control system using B-CAN System Diagnosis Test Mode A (see page 22-108).
If the moonroof works OK manually, but will not work in AUTO, or reverse frequently (pinch detection), do the moonroof calibration (see page 22-286) before proceeding with the input test.

1. Turn the ignition switch OFF.
2. Remove the headliner (see page 20-70).
3. Disconnect the 10P connector (A) from the moonroof control unit (B).

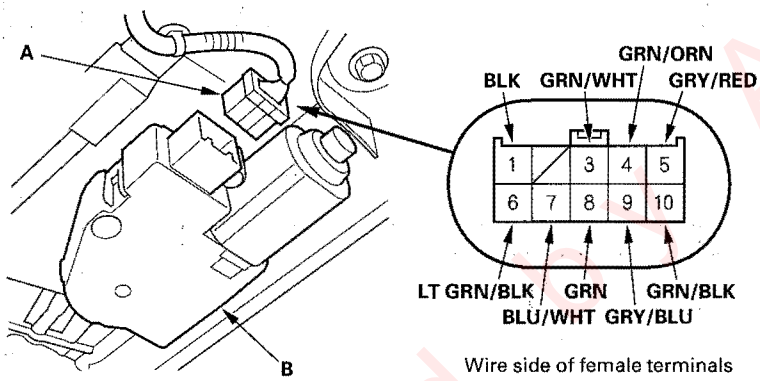

Wire side of female terminals

4. Inspect the connector and socket terminals to be sure they are all making good contact.
   - If the terminals are bent, loose or corroded, repair them as necessary, and recheck the system.
   - If the terminals look OK, go to step 5.
5. With the control unit still disconnected, make these input tests at the connector.
   - If any test indicates a problem, find and correct the cause, then recheck the system.
   - If all the input tests prove OK, the control unit must be faulty; replace the control unit.

Cavity	Wire	Test condition	Test: Desired result	Possible cause if result is not obtained
8	GRN	Under all conditions	Check for voltage to ground: There should be battery voltage.	• Blown No. 28 (20A) fuse in the under-dash fuse/relay box • Faulty under-dash fuse/relay box • An open in the wire
1	BLK	Under all conditions	Check for continuity to ground: There should be continuity.	• Poor ground (G501) • An open in the wire
3	GRN/WHT	Under all conditions	Check for continuity between the No. 3 terminal and the multiplex integrated control unit P12 terminal: There should be continuity.	• An open in the wire
		Disconnect the under-dash fuse/relay box connector P (30P)	Check for continuity between the No. 3 terminal and body ground: There should be no continuity.	• A short in the wire • Faulty moonroof switch

Protected by A R

Cavity	Wire	Test condition	Test: Desired result	Possible cause if result is not obtained
4	GRN/ORN	Moonroof switch in TILT position	Check for continuity between the No. 3 and No. 4 terminals: There should be continuity.	• Faulty moonroof switch • An open in the wire
9	GRY/BLU	Moonroof switch in OPEN position	Check for continuity between the No. 3 and No. 9 terminals: There should be continuity.	• Faulty moonroof switch • An open in the wire
6	LT GRN/ BLK	Moonroof switch in CLOSE position	Check for continuity between the No. 3 and No. 6 terminals: There should be continuity.	• Faulty moonroof switch • An open in the wire
5	GRY/RED	Moonroof switch in AUTO OPEN or AUTO CLOSE position	Check for continuity between the No. 3 and No. 5 terminals: There should be continuity.	• Faulty moon roof switch • An open in the wire

6. Jump the SCS line with the HDS disconnect the ECM/PCM connector A (31P), and make these input tests at the connector.

Cavity	Wire	Test condition	Test: Desired result	Possible cause if result is not obtained
7	BLU/WHT	Under all conditions	Check for continuity between the No. 7 terminal and the ECM/ PCM connector A No. 11 terminal: There should be continuity.	• An open in the wire
			Check for continuity between the No. 7 terminal and body ground: There should be no continuity.	• A short in the wire
10	GRN/BLK	Under all conditions	Check for continuity between the No. 10 terminal and the power window master switch (door multiplex control unit) A2 terminal: There should be continuity.	• An open in the wire
		Disconnect power window master switch connector A (22P)	Check for continuity between the No. 10 terminal and body ground: There should be no continuity.	• A short in the wire

Protected by AP

Moonroof Switch Test/Replacement

1. Carefully pry out the moonroof switch (A).

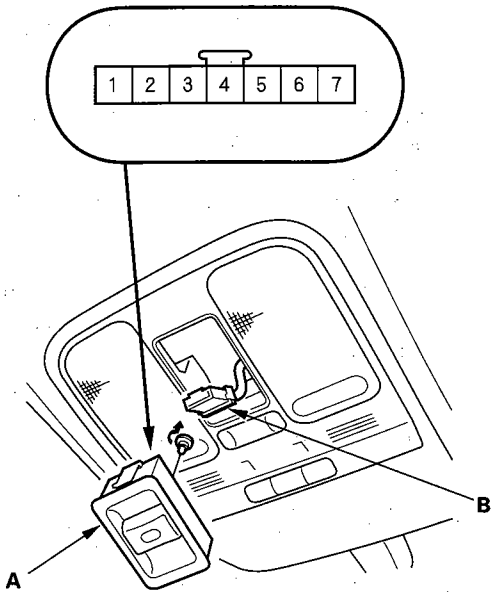

2. Disconnect the 7P connector (B) from the moonroof switch.

3. Check for continuity between the terminals in each switch position according to the table.

Terminal / Position	1	2	3	6	7	4		5
OPEN	○				○	○	○	○
CLOSE	○		○			○	○	○
TILT	○	○				○	○	○
CLOSE+AUTO	○		○	○		○	○	○
OPEN+AUTO	○			○	○	○	○	○

4. If the continuity check is not as specified, check the bulb. If the bulb is OK, replace the switch.

Protected by AR

Accessory Power Sockets

Component Location Index

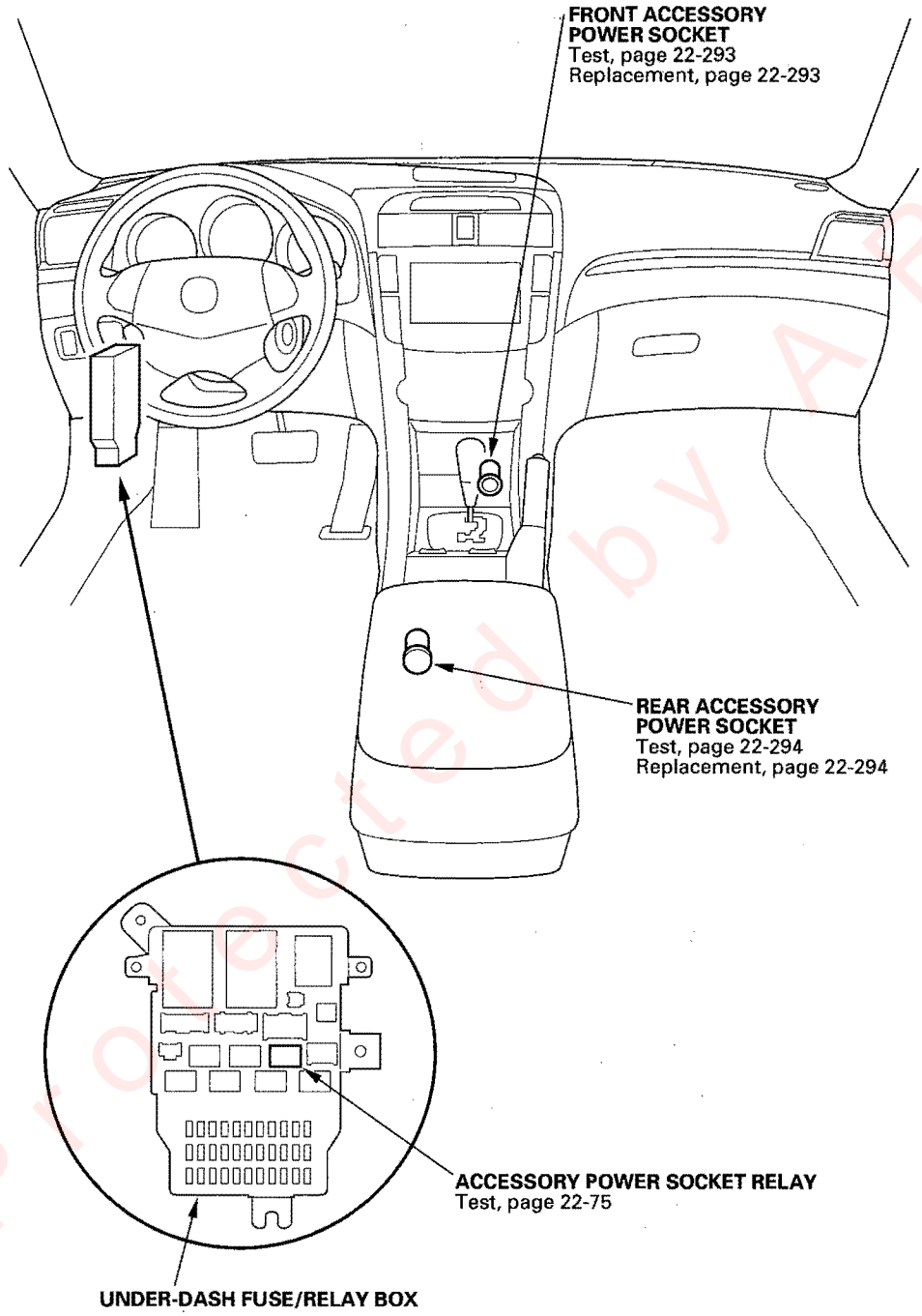

Protected by AR

Accessory Power Sockets

Circuit Diagram

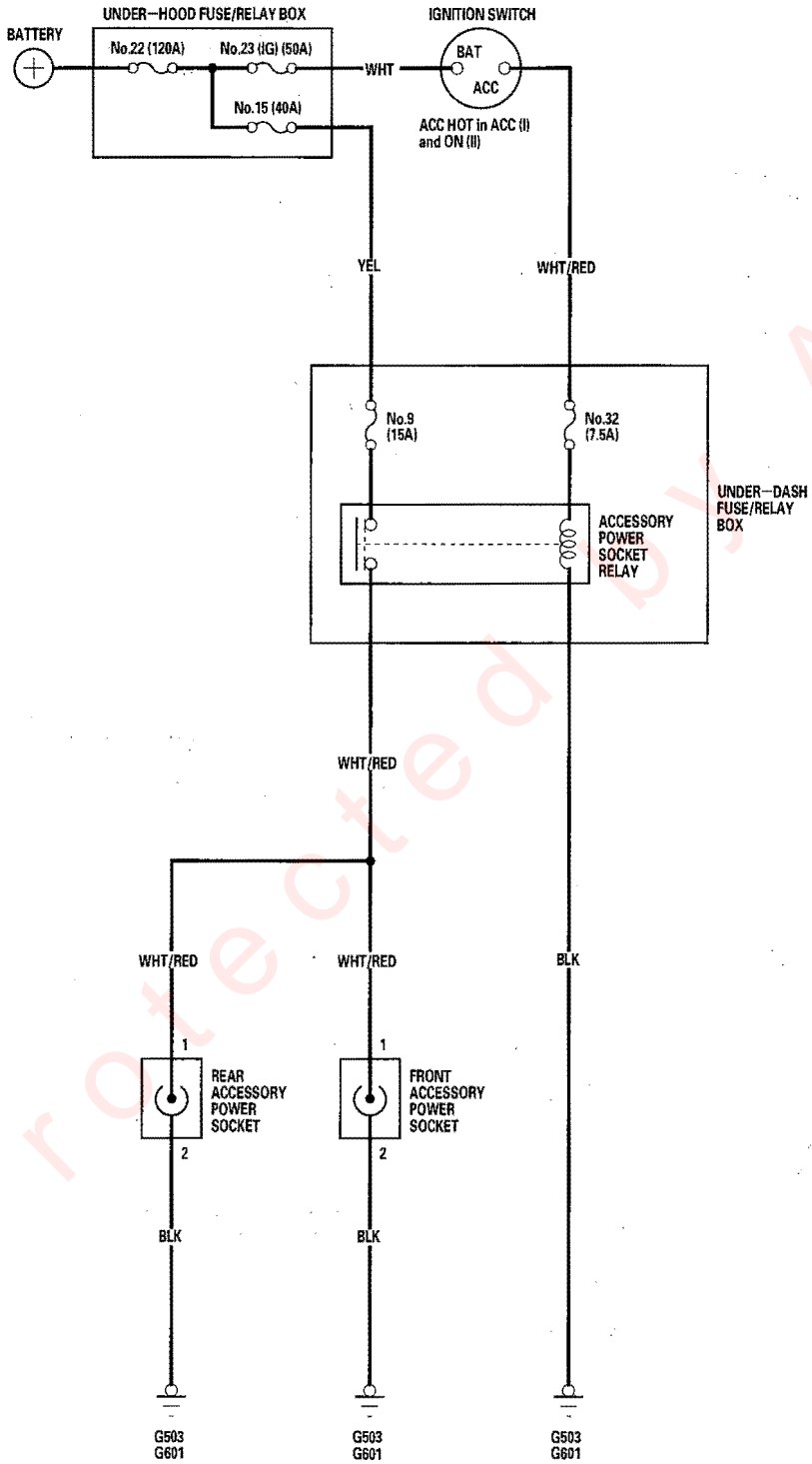

Protected by AR

Front Accessory Power Socket Test/Replacement

1. Remove the center console panel (see page 20-78).
2. Disconnect the 2P connector from the front accessory power socket.

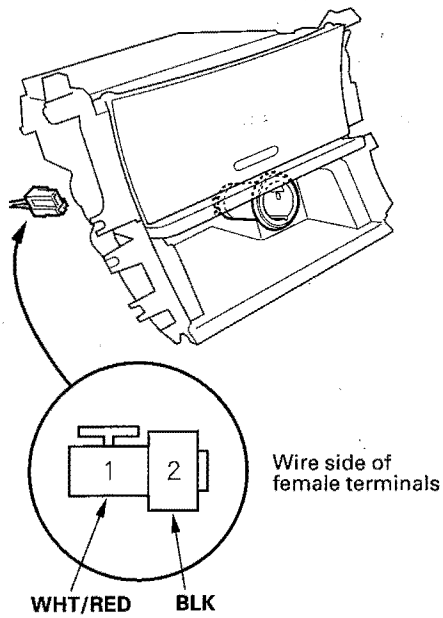

3. Inspect the connector terminals to be sure they are all making good contact.
   - If the terminals are bent, loose, or corroded, repair them as necessary, and recheck the system.
   - If the terminals look OK, go to step 4.
4. Turn the ignition switch to ACC (I), and check for voltage between the No. 1 terminal and body ground. There should be battery voltage.
   - If there is battery voltage, go to step 5.
   - If there is no battery voltage, check for:
     – Blown No. 9 (15A) or No. 32 (7.5A) fuse in the under-dash fuse/relay box.
     – Faulty accessory power socket relay.
     – Poor ground (G 503, G601).
     – An open in the wire.
5. Check for continuity between the No. 2 terminal and body ground. There should be continuity.
   - If there is continuity, go to step 6.
   - If there is no continuity, check for:
     – Poor ground (G 503, G601).
     – An open in the wire.
6. Remove the housing (A) and socket (B).

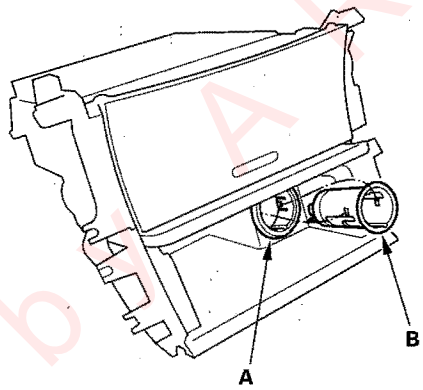

7. Remove the ring (A).

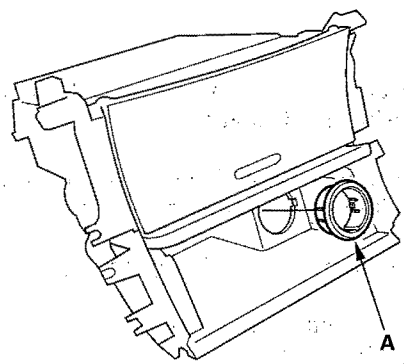

8. Install the power socket in the reverse order of removal.

Protected by AR

Rear Accessory Power Socket Test/Replacement

1. Remove the center console rear section (see page 20-77).

2. Disconnect the 2P connector (A) from the rear accessory power socket (B).

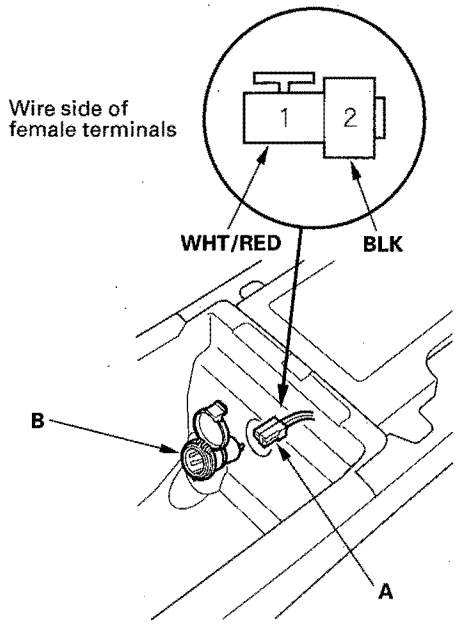

3. Inspect the connector terminals to be sure they are all making good contact.

   - If the terminals are bent, loose, or corroded, repair them as necessary, and recheck the system.
   - If the terminals look OK, go to step 4.

4. Turn the ignition switch to ACC (I), and check for voltage between the No. 1 terminal and body ground. There should be battery voltage.

   - If there is battery voltage, go to step 5.
   - If there is no battery voltage, check for:
     – Blown No. 9 (15A) or No. 32 (7.5A) fuse in the under-dash fuse/relay box.
     – Faulty accessory power socket relay.
     – Poor ground (G 503, G601).
     – An open in the wire.

5. Check for continuity between the No. 2 terminal and body ground. There should be continuity.

   - If there is continuity, go to step 6.
   - If there is no continuity, check for:
     – Poor ground (G 503, G601).
     – An open in the wire.

6. Remove the housing (A) and socket (B).

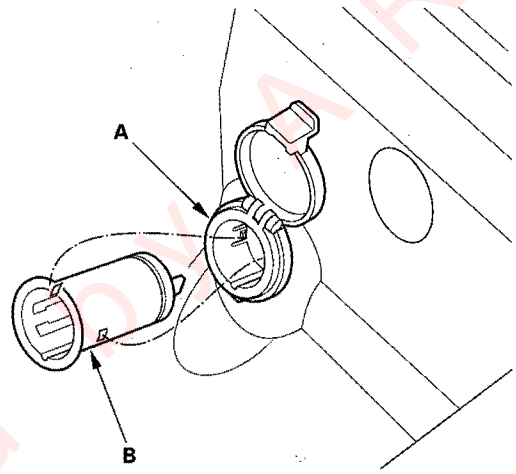

7. Remove the housing (A) from the panel.

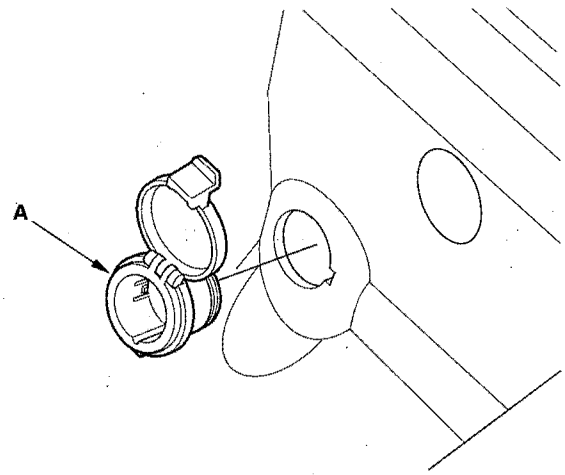

8. Install the power socket in the reverse order of removal.

Protected by AR

Automatic Dimming Inside Mirror

Circuit Diagram

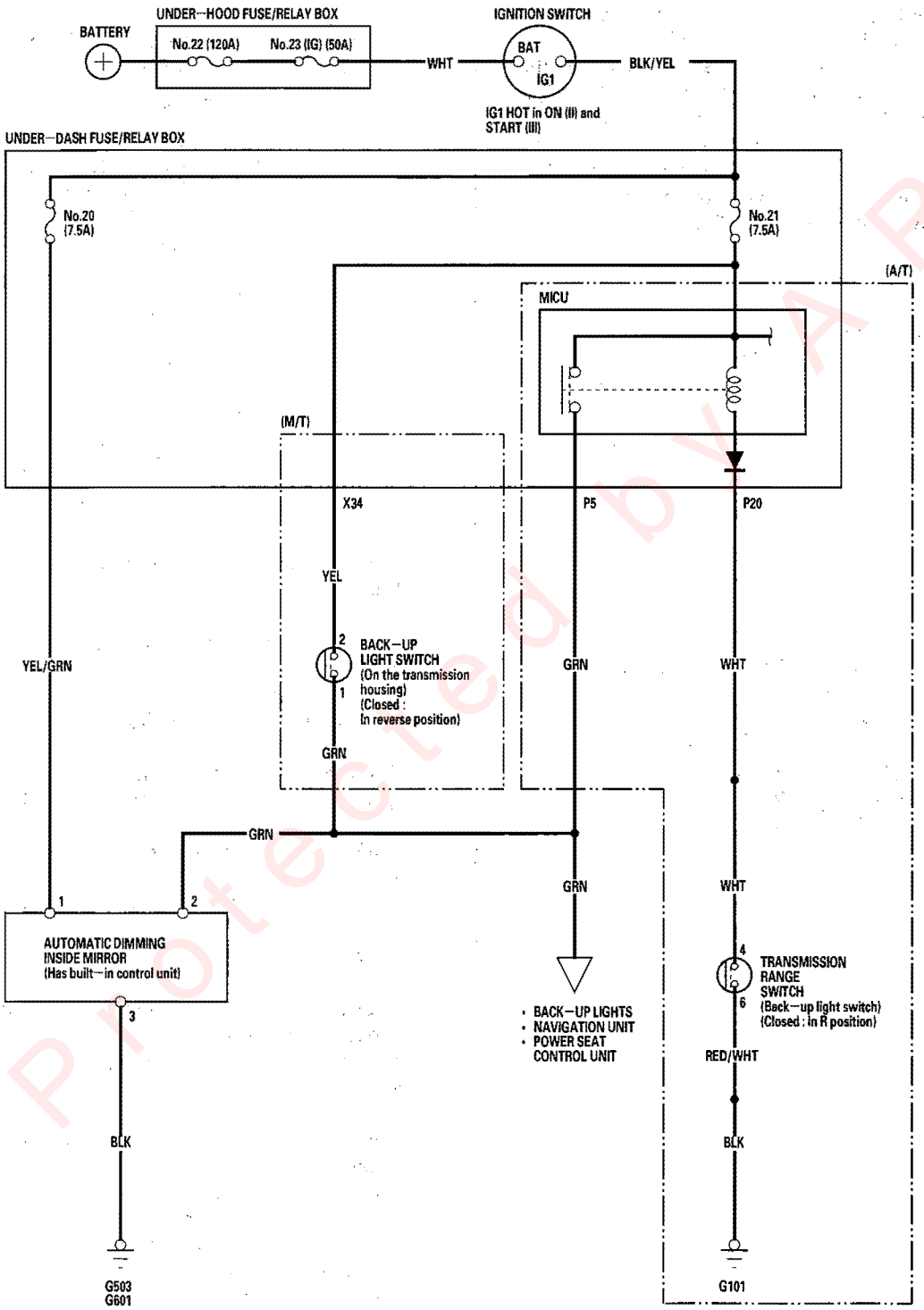

Protected by AR

Automatic Dimming Inside Mirror

System Description

The automatic dimming inside mirror has a front-facing lux level sensor (A), a rear-facing lux level sensor (B), and a control unit. The control unit receives signals from each sensor. Based on the difference between the two lux levels (the light outside the vehicle and the light from the headlights of the other vehicle, etc.), the control unit controls the electro-chromic gel to reduce the glare. This dimming function is canceled when the transmission is in reverse, or when the automatic dimming off switch (C) is turned OFF.

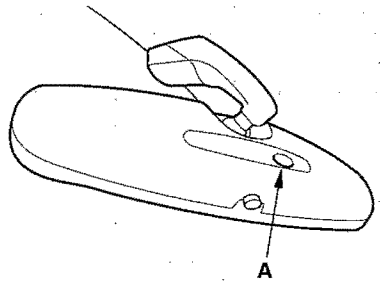

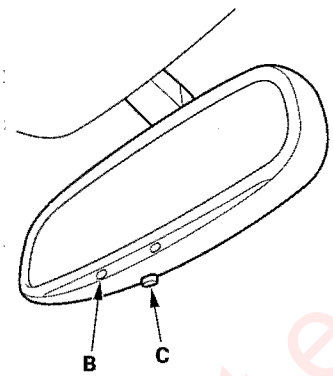

Test/Replacement

1. Remove the roof console (see page 22-206).

2. Disconnect the 3P connector (A) from the automatic dimming inside mirror (B).

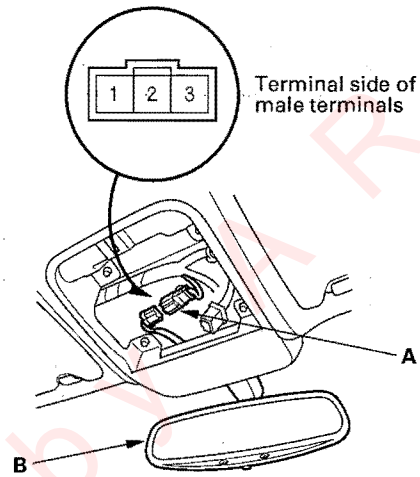

3. Check for continuity between No. 3 terminal and body ground.

   - If there is continuity, go to step 4.
   - If there is no continuity, check for:
     – an open in the wire.
     – poor ground (G 503, G601).

4. Check for voltage between No. 1 terminal and body ground with the ignition switch ON (II).

   - If there is battery voltage, go to step 5.
   - If there is no voltage, check for:
     – blown No. 20 (7.5A) fuse in the under-dash fuse/relay box.
     – an open in the wire.

5. Check for voltage between No. 2 terminal and body ground with the ignition switch turned ON (II) and transmission range switch (A/T) or back-up light switch (M/T) in reverse.

   - If there is battery voltage, replace the mirror assembly.
   - If there is no voltage, check for:
     – an open in the wire.
     – blown No. 21 (7.5A) fuse in the under-dash fuse/relay box.
     – faulty under-dash fuse/relay box.
     – faulty transmission range switch (A/T) or back-up light switch (M/T).

Protected by

Seat Belt Tension Reducer

Circuit Diagram

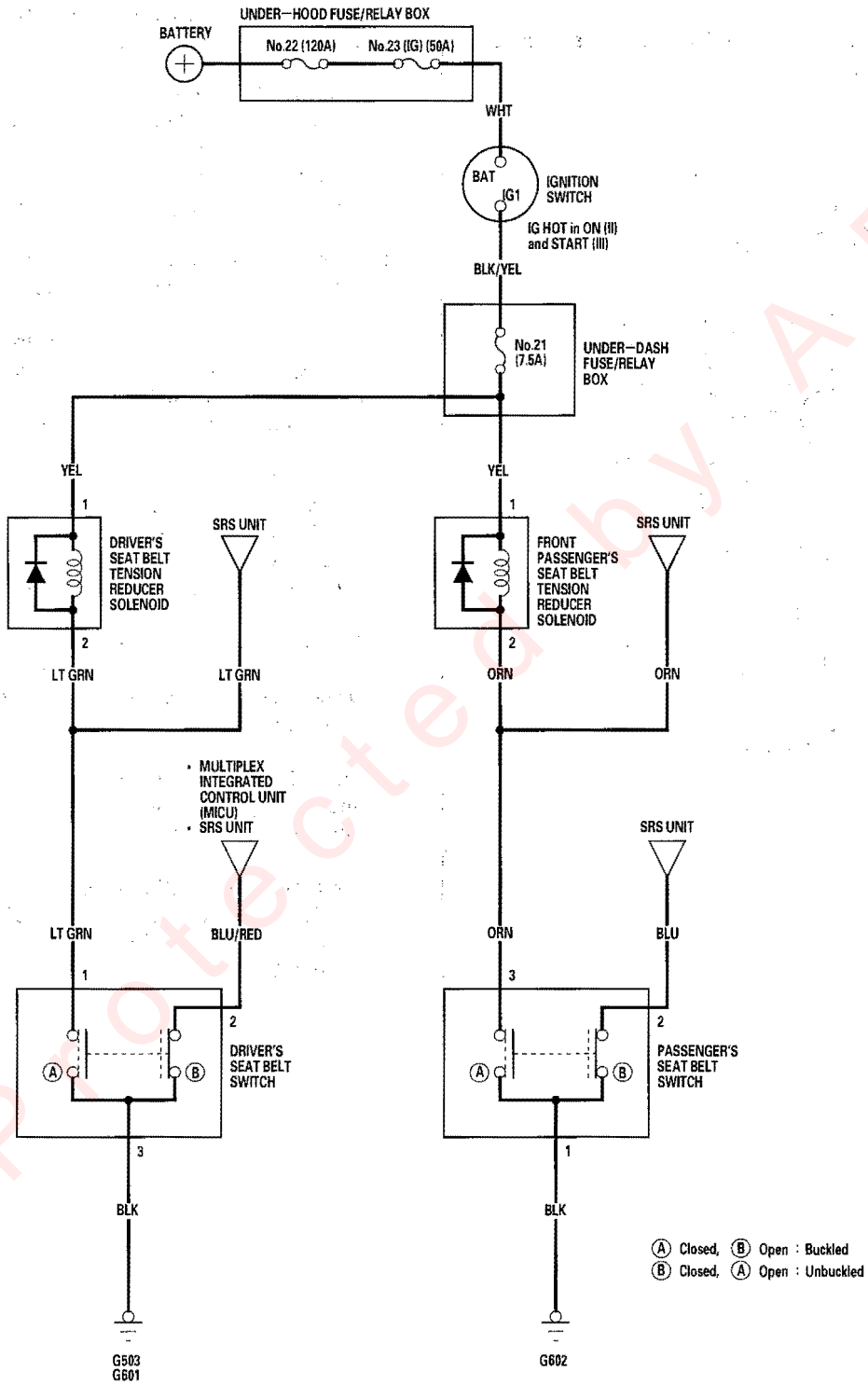

Protected by AR

Seat Belt Tension Reducer

Test

1. Remove the B-pillar lower trim (see page 20-62).

2. Disconnect the 2P connector (A) from the seat belt tension reducer (B).

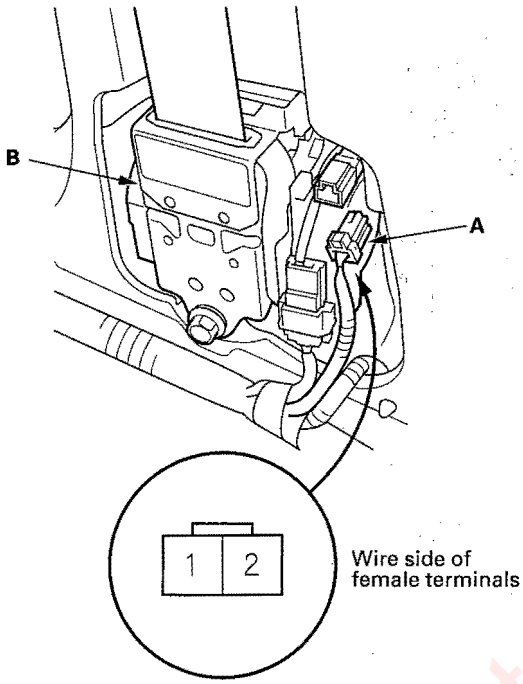

3. Check for voltage between the No. 1 (+) terminal and body ground with the ignition switch ON (II). There should be battery voltage.

   - If there is no voltage, check for:
     – A blown No. 21 (7.5A) fuse in the under-dash fuse/relay box.
     – An open in the YEL wire.
   - If there is battery voltage, go to step 4.

4. Turn the ignition switch OFF, and reconnect the 2P connector to the seat belt tension reducer.

5. Check for voltage between the No. 2 terminal and body ground with the ignition switch ON (II) and the seat belt unbuckled.
   There should be battery voltage.

   - If there is no voltage, check for a faulty seat belt switch, short to body ground on the LT GRN (or ORN) wire, or replace the seat belt tension reducer.
   - If there is battery voltage, go to step 6.

6. Turn the ignition switch OFF.

7. Disconnect the 2P connector from the seat belt tension reducer.

8. Check for continuity between the No. 2 terminal and body ground with the seat belt buckled.
   There should be continuity.

   - If there is no continuity, check for:
     – Poor ground (G 503, G601, G602).
     – An open in the wire.
     – Faulty seat belt switch.

Protected by A R

Trunk Lid Opener

Component Location Index

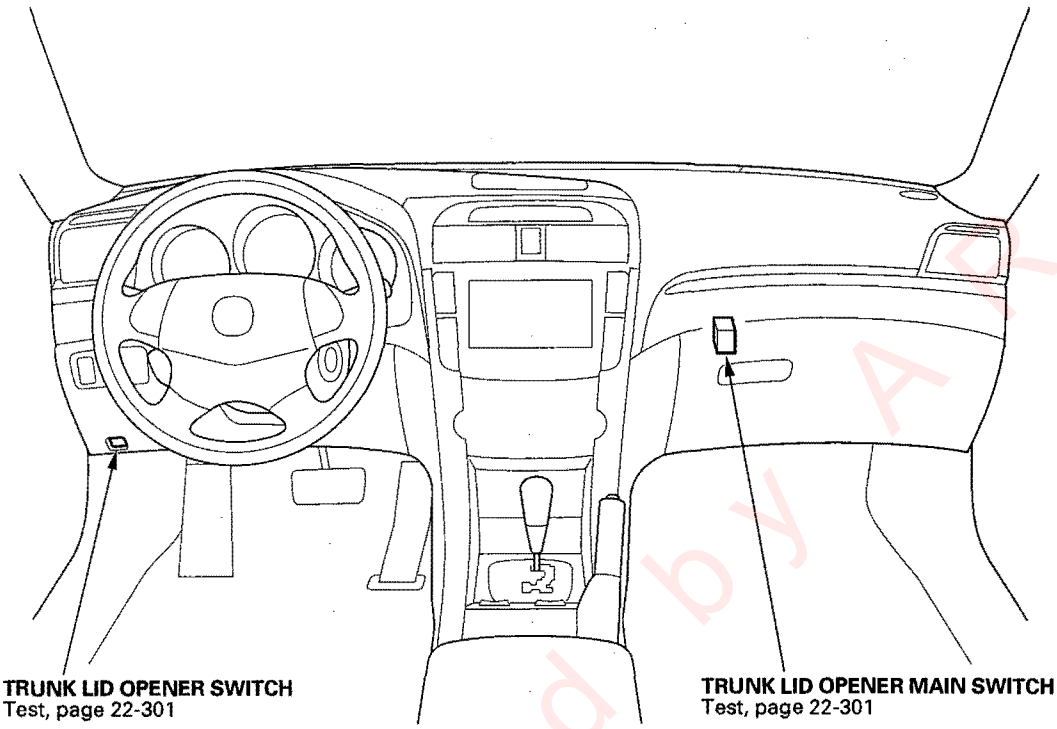

TRUNK LID OPENER SWITCH
Test, page 22-301

TRUNK LID OPENER MAIN SWITCH
Test, page 22-301

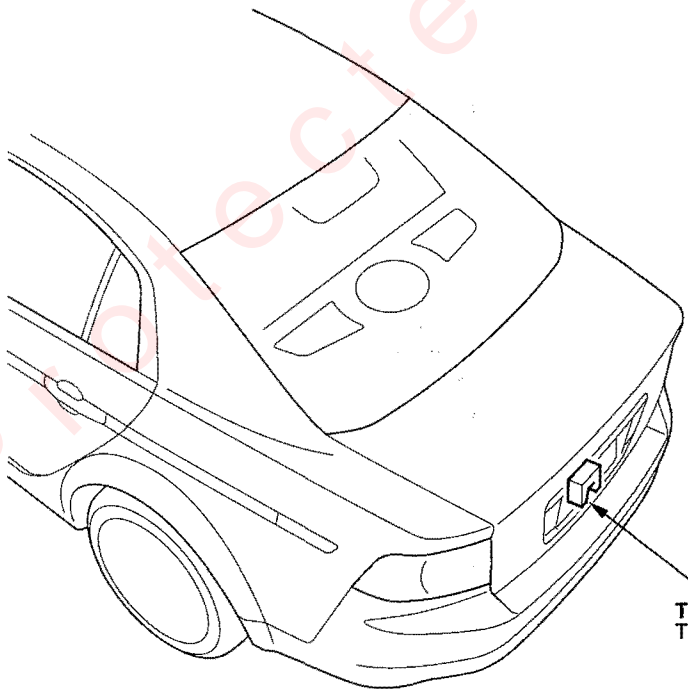

TRUNK LID OPENER SOLENOID
Test, page 22-302

Protected by AR

Trunk Lid Opener

Circuit Diagram

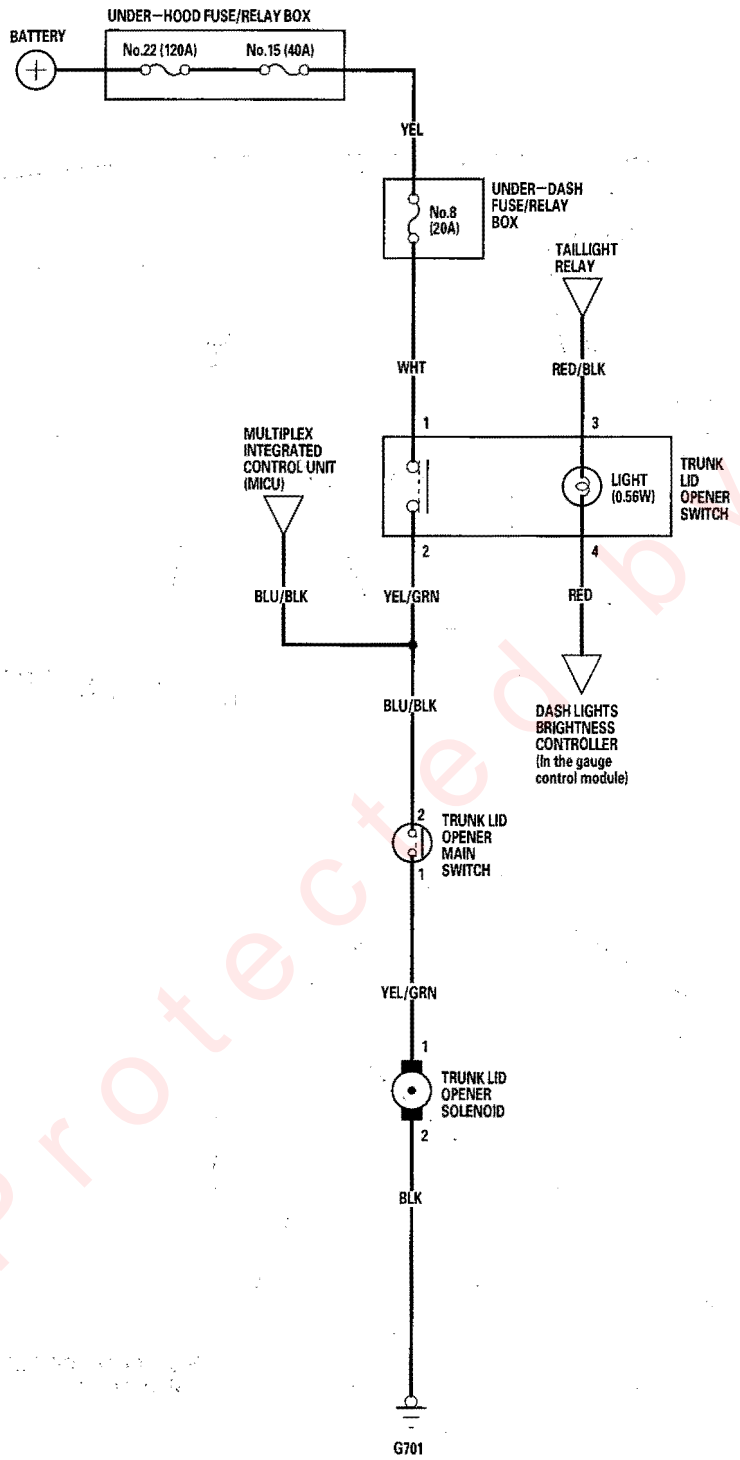

Protected by AR

Main Switch Test

1. Remove the glove box housing (see page 20-84).
2. Carefully push the main switch (A) out from behind the glove box housing.

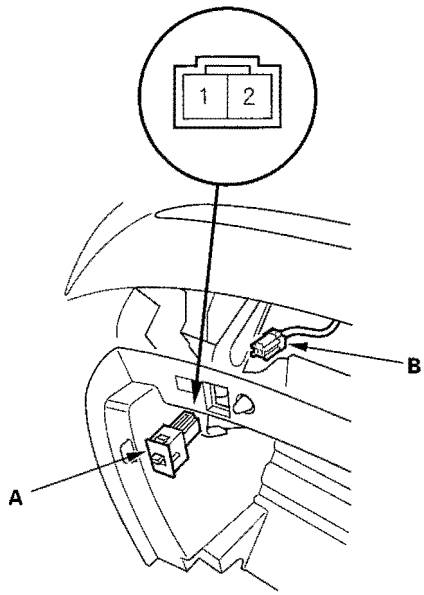

3. Disconnect the 2P connector (B) from the main switch.
4. Check for continuity between the No. 1 and No. 2 terminals.
   - With the main switch ON, there should be continuity.
   - With the main switch OFF, there should be no continuity.
5. If the continuity check is not as specified, replace the main switch.

Switch Test

1. Remove the driver's dashboard lower cover (see page 20-82).
2. Disconnect the 5P connector (A) from the switch (B).

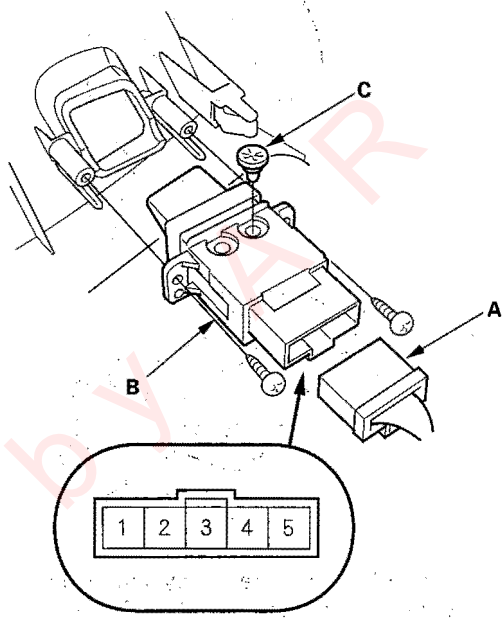

3. Check for continuity between the No. 1 and No. 2 terminals.
   - With the switch pressed, there should be continuity.
   - With the switch released, there should be no continuity.
4. If the continuity check is not as specified, remove the two screws and replace the switch.
5. Check for continuity between the No. 3 and No. 4 terminals. If there is no continuity, replace the bulb (C).

Protected by AR

Trunk Lid Opener Solenoid Test

1. Disconnect the 3P connector from the trunk latch switch/trunk lid opener solenoid.

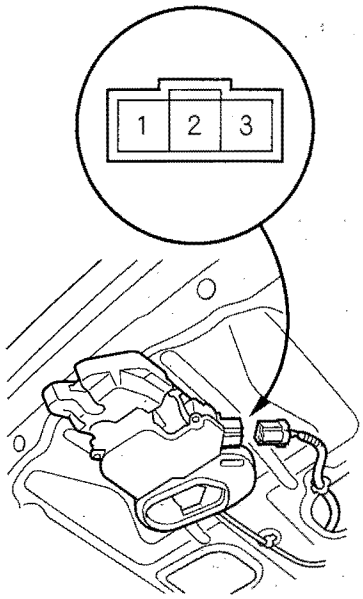

2. Check solenoid operation by connecting power and ground according to the table. To prevent damage to the solenoid, apply battery voltage only momentarily.

Terminal / Position	1	2
UNLOCK	⊕	⊖

3. If the solenoid does not work as specified, replace it.

Protected by AR

Clock

Circuit Diagram

Without Navigation:

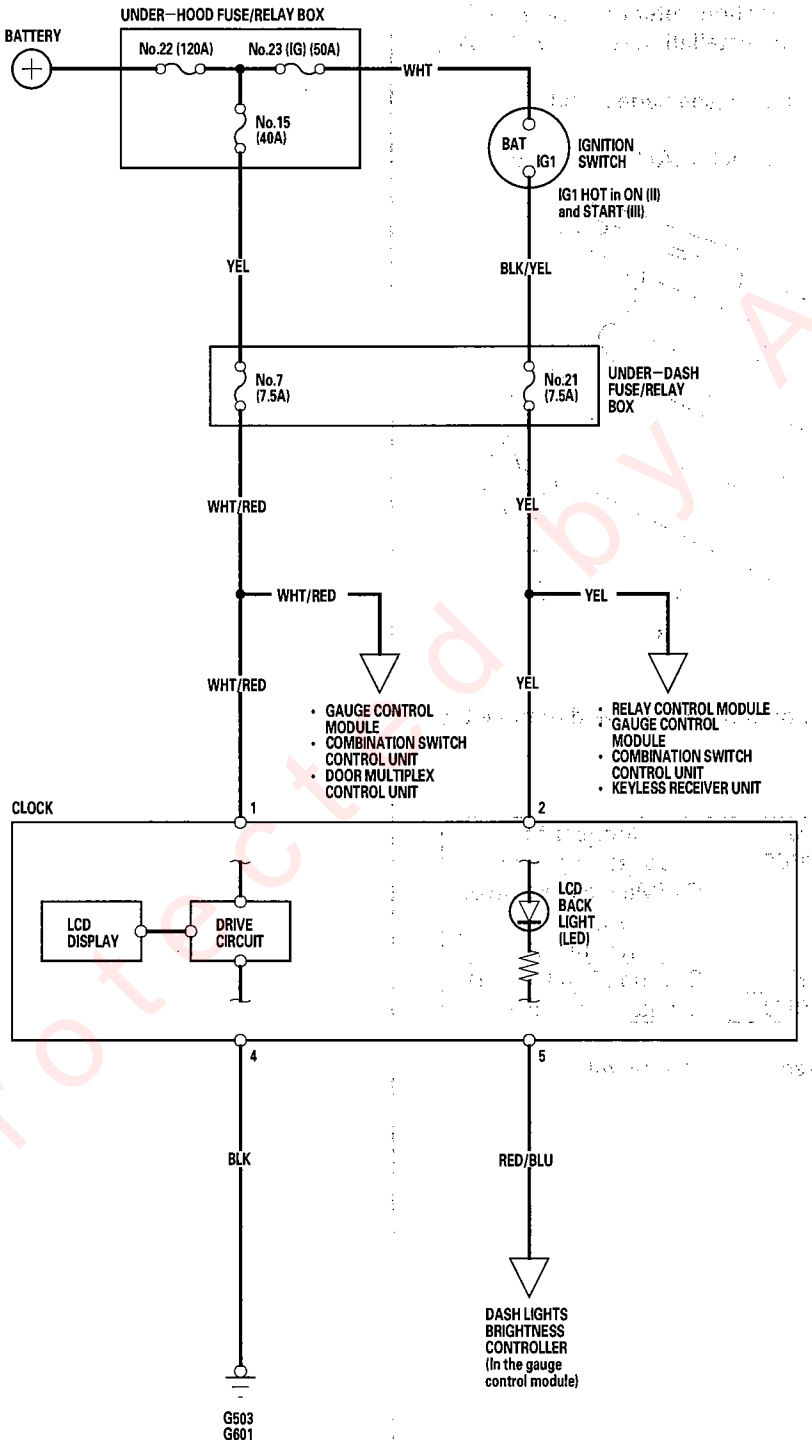

Protected by A-R

Replacement

Without Navigation

NOTE: Vehicles with navigation; refer to audio-HVAC subdisplay-clock removal/installation (see page 22-419).

1. Remove the upper panel (see page 20-83).
2. Disconnect the 5P connector (A) from the clock.

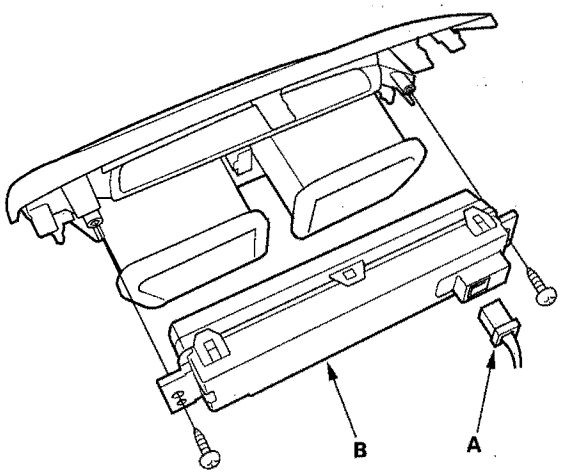

3. Remove the two mounting screws, and remove the clock (B).

Terminals

Cavity	Wire	Connect to
1	WHT/RED	Constant power
2	YEL	IG1 (Main clock power supply)
3	—	Not used
4	BLK	Ground (G503, G601)
5	RED/BLU	Lights-on signal (−)

4. Install in the reverse order of removal.

Protected by AR

Power Mirrors

Component Location Index

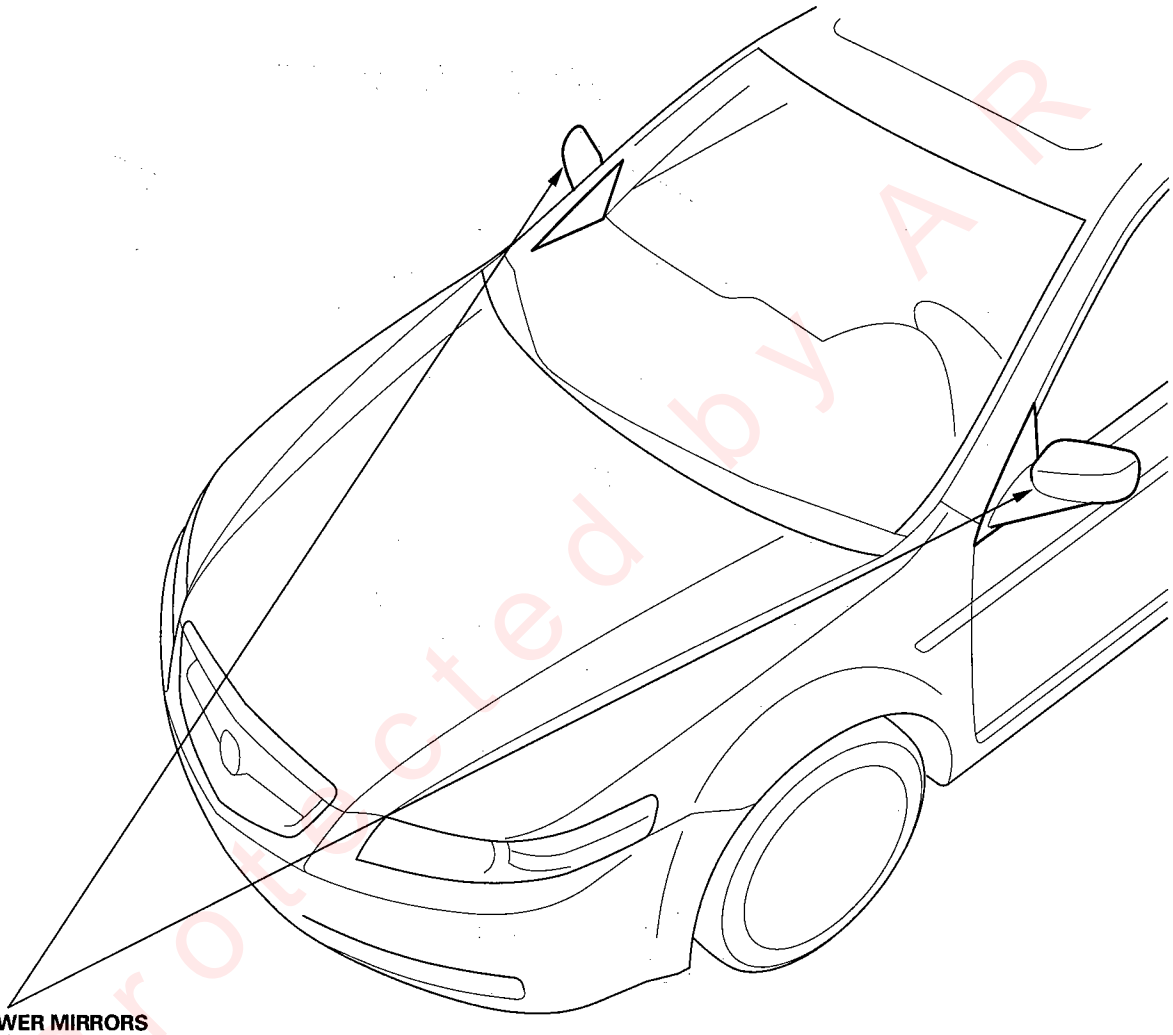

POWER MIRRORS
Replacement, page 20-34
Power Mirror Actuator Test, page 22-308
Mirror Actuator Replacement, page 22-309
Circuit Diagram, page 22-330

Protected by AR

(cont'd)

Component Location Index (cont'd)

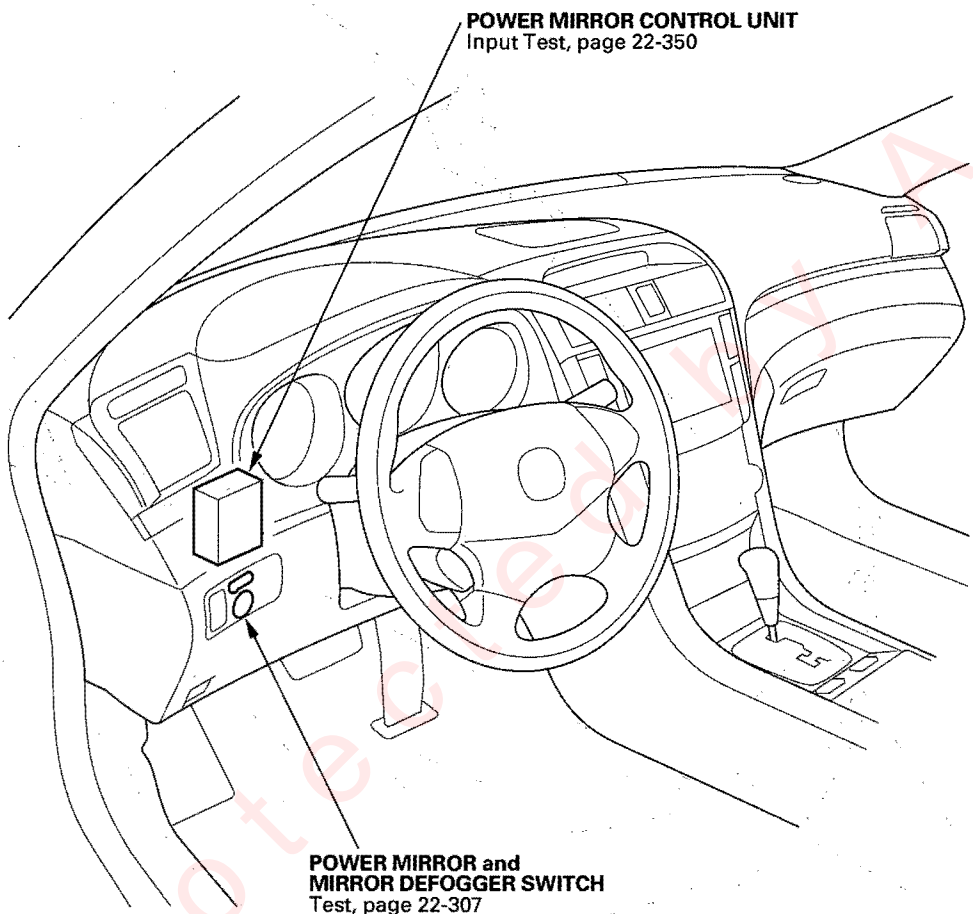

Protected by AR

Power Mirror Switch Test/Replacement

1. Remove the driver's dashboard lower cover (see page 20-82).

2. Disconnect the 13P conector (A) from the power mirror switch (B).

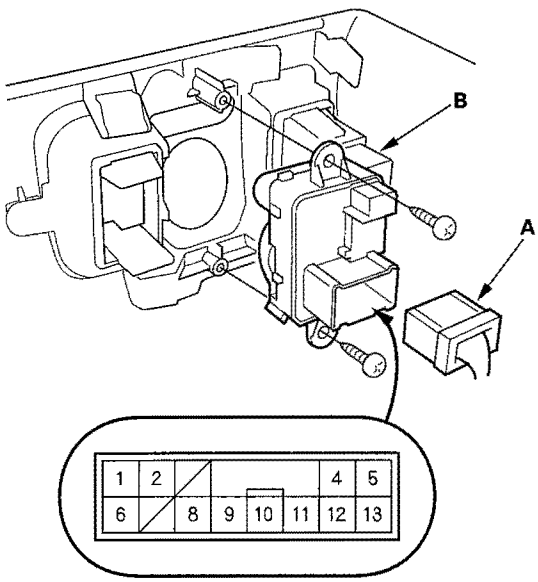

3. Check for continuity between the terminals in each switch position according to the table.

Mirror Switch:

	Terminal / Position	2	5	6	10	11	12	13
L	UP	○	○	○			○	
L	DOWN	○					○	
L	LEFT	○	○				○	
L	RIGHT	○					○	
R	UP	○	○	○				○
R	DOWN	○	○					○
R	LEFT	○				○		○
R	RIGHT	○	○			○		○

Defogger Switch:

Terminal / Position	1	8	6
ON	○	○▶	∿○
OFF		○▶	∿○

4. If the continuity is not as specified, remove the screws and replace the power mirror switch.

Protected by AR

Power Mirror Actuator Test

NOTE: The power mirror actuator can be tested by using the HDS by following these steps:

- Select BODY ELECTRICAL from the SYSTEM SELECTION MENU.
- Select FUNCTION TESTS, and then the appropriate power mirror function test.

1. Remove the door panel (see page 20-7).

2. Disconnect the 13P connector (A) from the power mirror actuator (B).

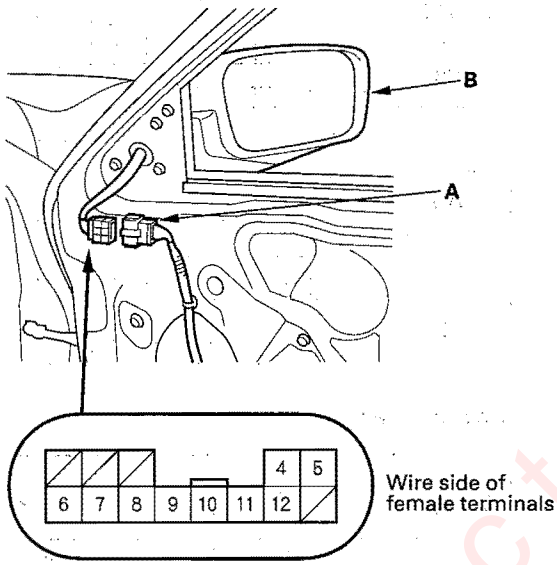

3. Check actuator operation by connecting power and ground according to the table.

Terminal / Position	10	11	12
TILT UP	⊕		⊖
TILT DOWN	⊖		⊕
SWING LEFT		⊖	⊕
SWING RIGHT		⊕	⊖

4. If the mirror fails to work properly, replace the mirror actuator.

Defogger Test

5. Check for continuity between the No. 5 and No. 4 terminals of the 13P connector. There should be continuity with the defogger switch ON. If there is no continuity, check for an open circuit.

Protected by AR

Power Mirror Actuator Replacement

Removal

1. Remove the mirror holder (see page 20-34), power mirror (see page 20-34), and disconnect the connectors.
2. Remove the gasket (A).

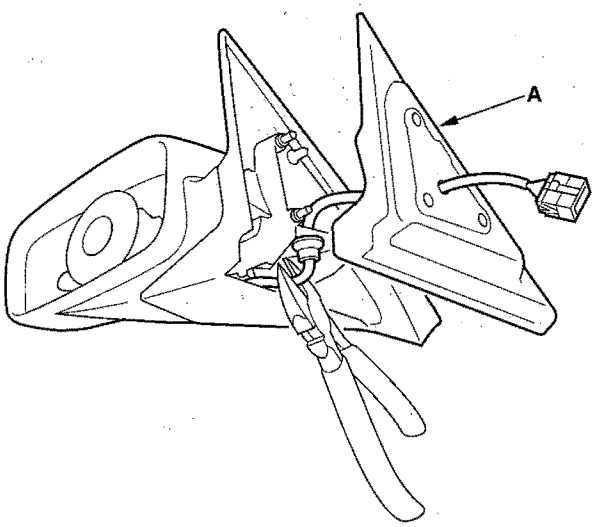

3. Record the terminal location and wire harness colors, then cut the wire harness with cutter.
4. Remove the three Torx screws ans separate the power mirror actuator (A) from the housing (B).

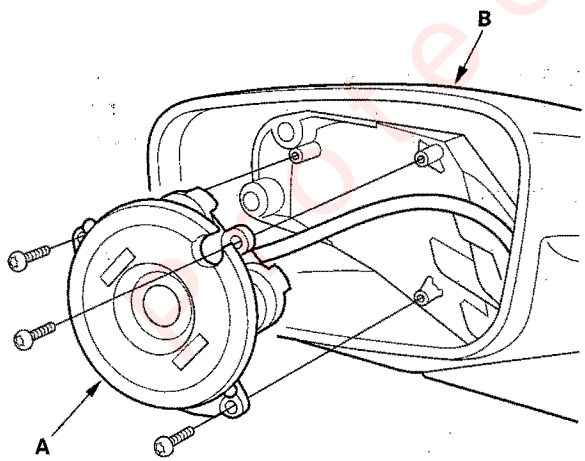

5. Remove the screws and separate the mirror housing (A) and the bracket (B).

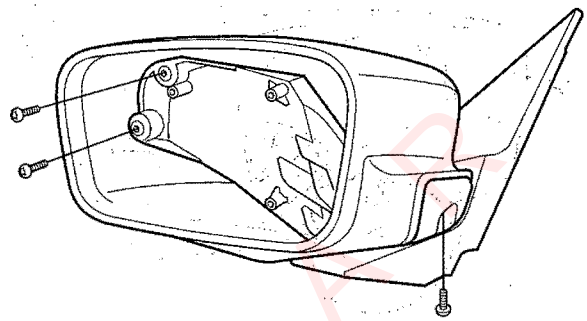

Installation

6. Route a new actuator harness (A) through the bracket (B).

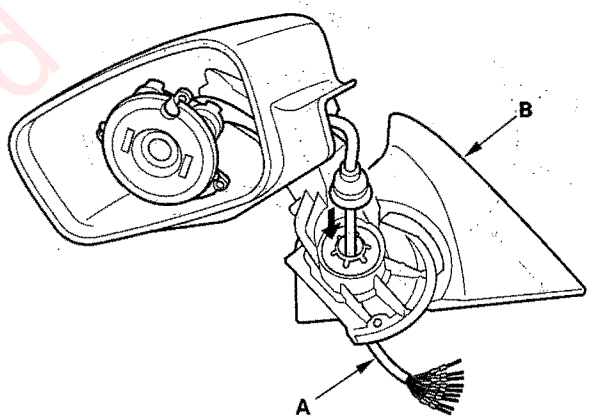

(cont'd)

Protected by AP

Power Mirror Actuator Replacement (cont'd)

7. Install the bracket (A) on the mirror housing (B).

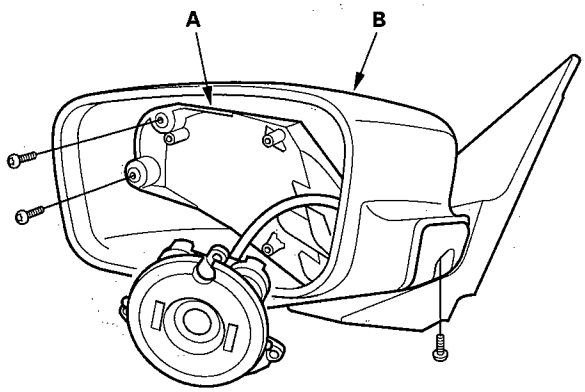

8. Install the mirror actuator (A) to the bracket (B).

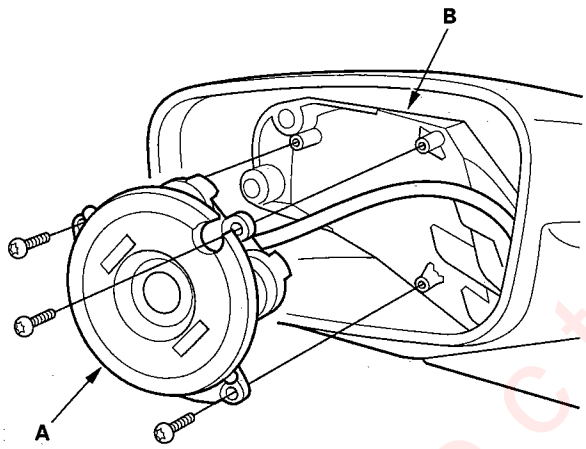

9. Route the wire harness (A) through the hole of the gasket (B), then install the gasket.

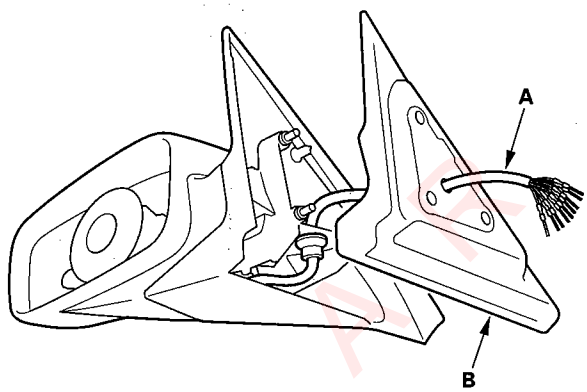

10. Insert the terminals into the connector in the original arrangement as shown.

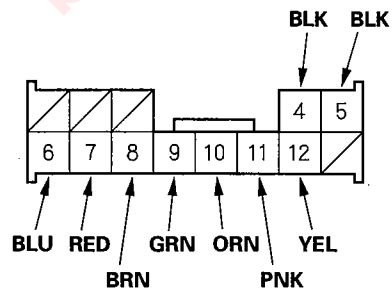

11. Reassemble in the reverse order of disassembly. Be careful not to break the mirror holder when reinstalling it to the actuator (see page 20-34).

12. Reinstall the mirror assembly to the door.

13. Operate the power mirror to ensure smooth operation.

Protected by AFT

Component Location Index

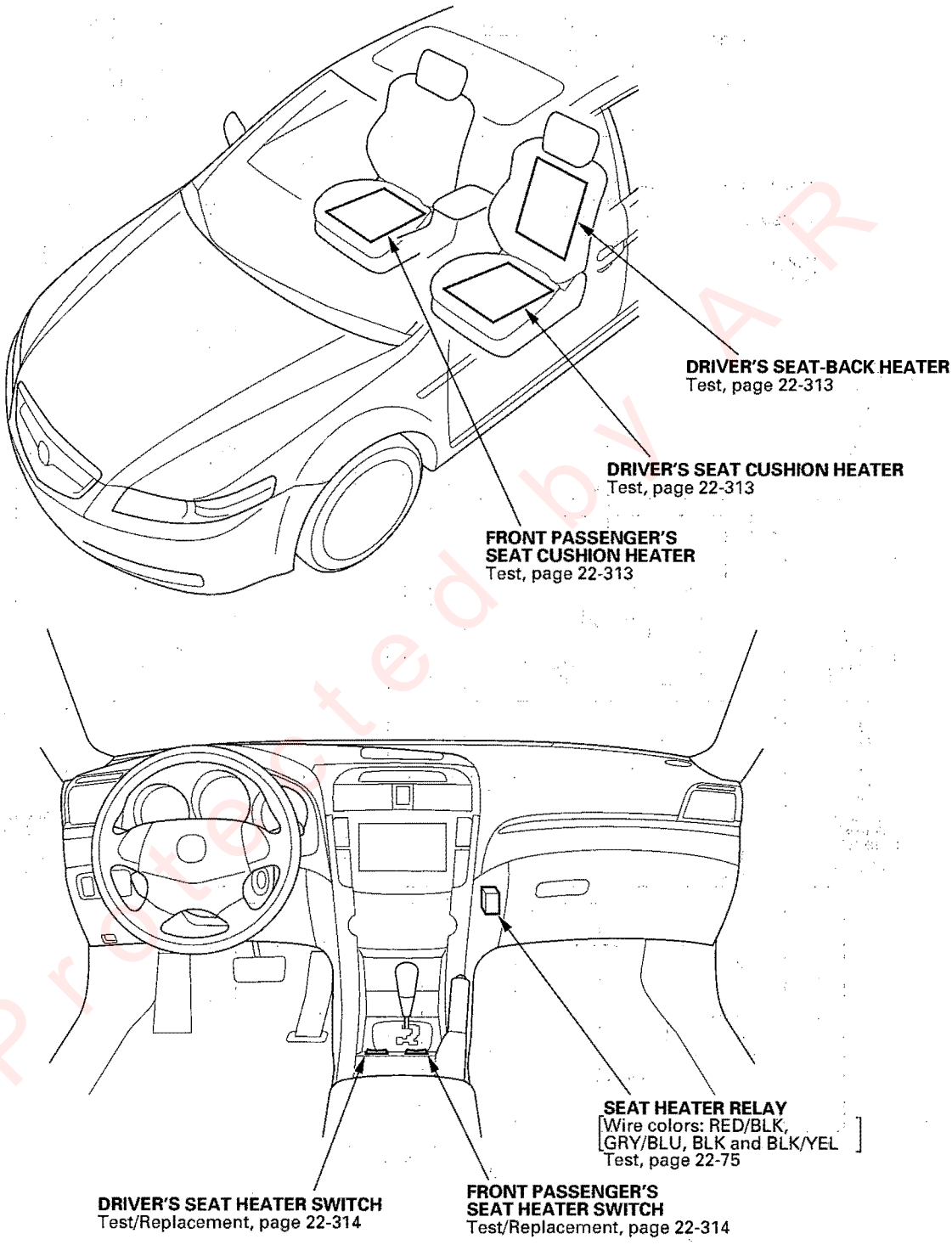

Protected by A R

Seat Heaters

Circuit Diagram

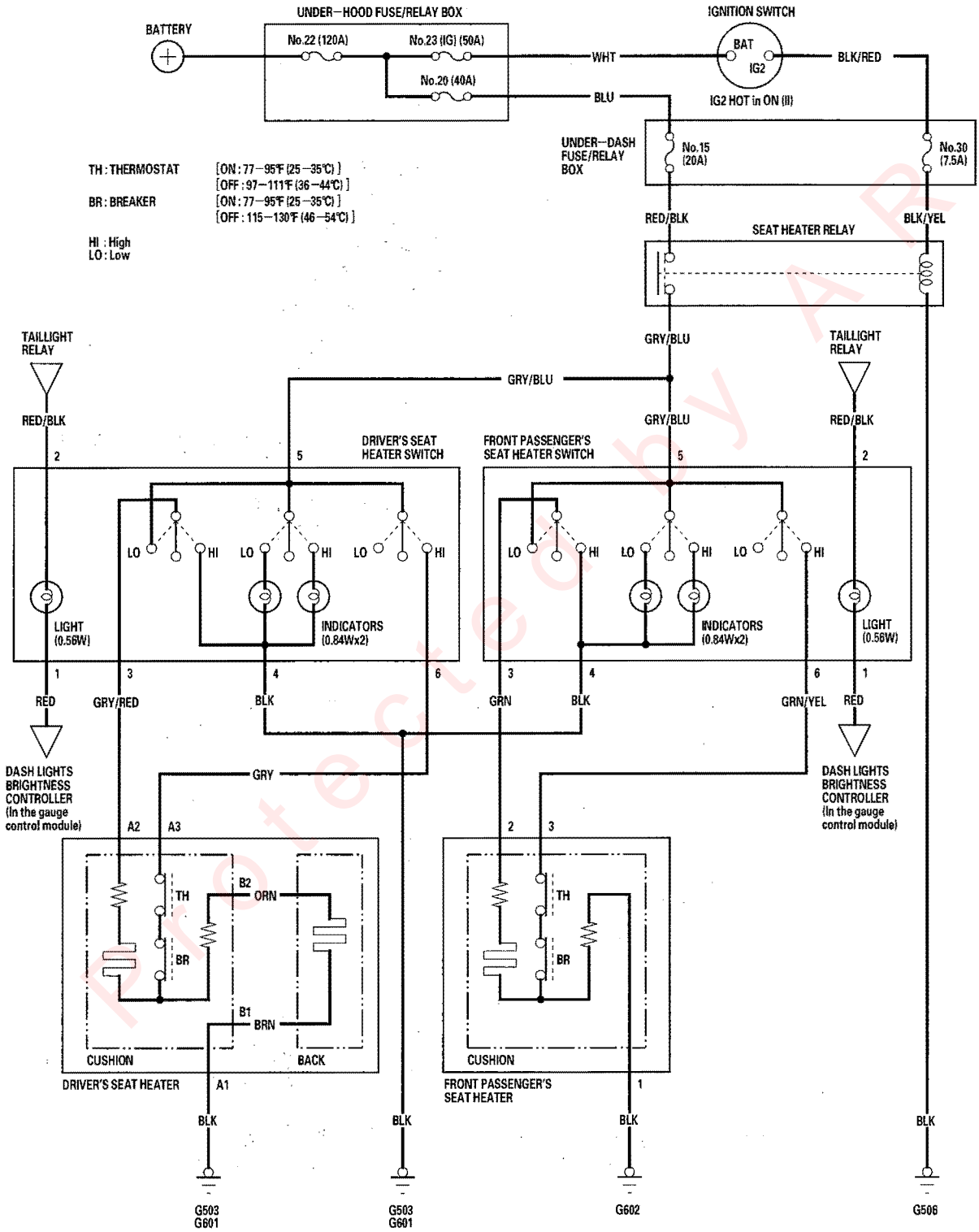

Protected by AR

Seat Heater Test

Driver's Seat

1. Remove the driver's seat (see page 20-99).
2. Disconnect the 3P connector (A) and 2P connector (B) from the seat heater.

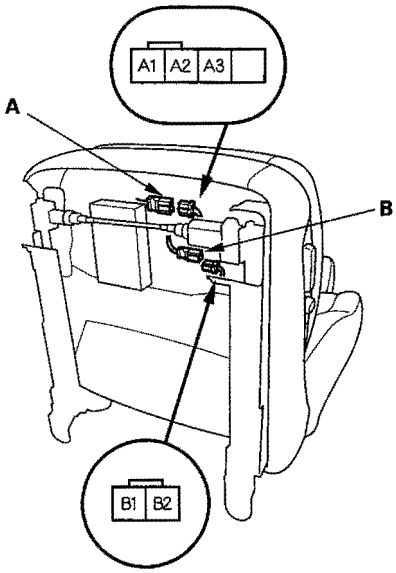

Wire side of female terminals

3. Check for continuity between the B1 and B2 terminals of the seat-back heater 2P connector. There should be continuity.
4. Check for continuity between the A1 and B1 terminals, the A2 and A3 terminals, and the A2 and B2 terminals. There should be continuity.
5. If the continuity check is not as specified, replace the appropriate seat heater.

Front Passenger's Seat

1. Remove the passenger's seat (see page 20-99).
2. Disconnect the 3P connector (A) from the seat heater.

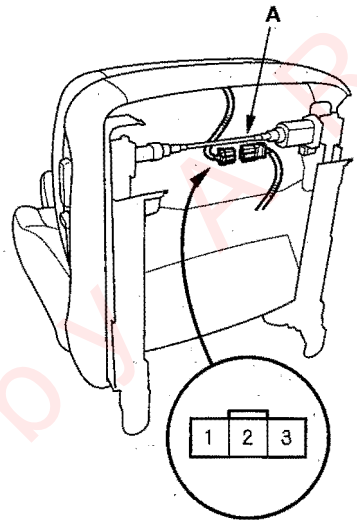

Wire side of female terminals

3. Check for continuity between the No. 1 and No. 2 terminals, and No. 1 and No. 3 terminals of the 3P connector. There should be continuity.
4. If the continuity is not as specified, replace the seat heater.

Protected by AIR

Switch Test

1. Remove the center console panel (see page 20-78).
2. Disconnect the 6P connector from the seat heater switch (A).

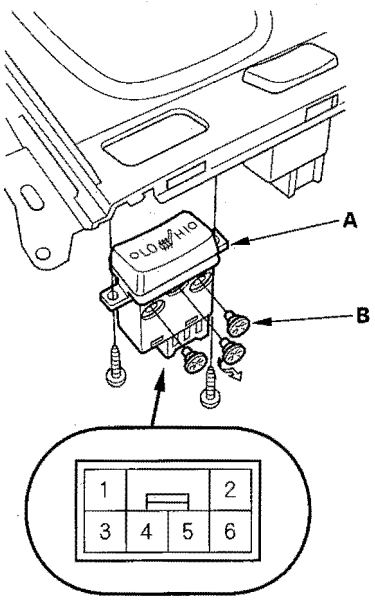

3. Remove the two screws and the switch.
4. Check for continuity between the terminals in each switch position according to the table.

Position \ Terminal		1		2	3	4		5	6
ON	HIGH	○	○	○	○	○	○	○	
	LOW	○	○	○		○	○	○	
OFF		○	○	○					

5. If the continuity check is not as specified, replace the illumination bulbs (B) or the switch.

Protected by AR

Power Lumbar Support

Component Location Index

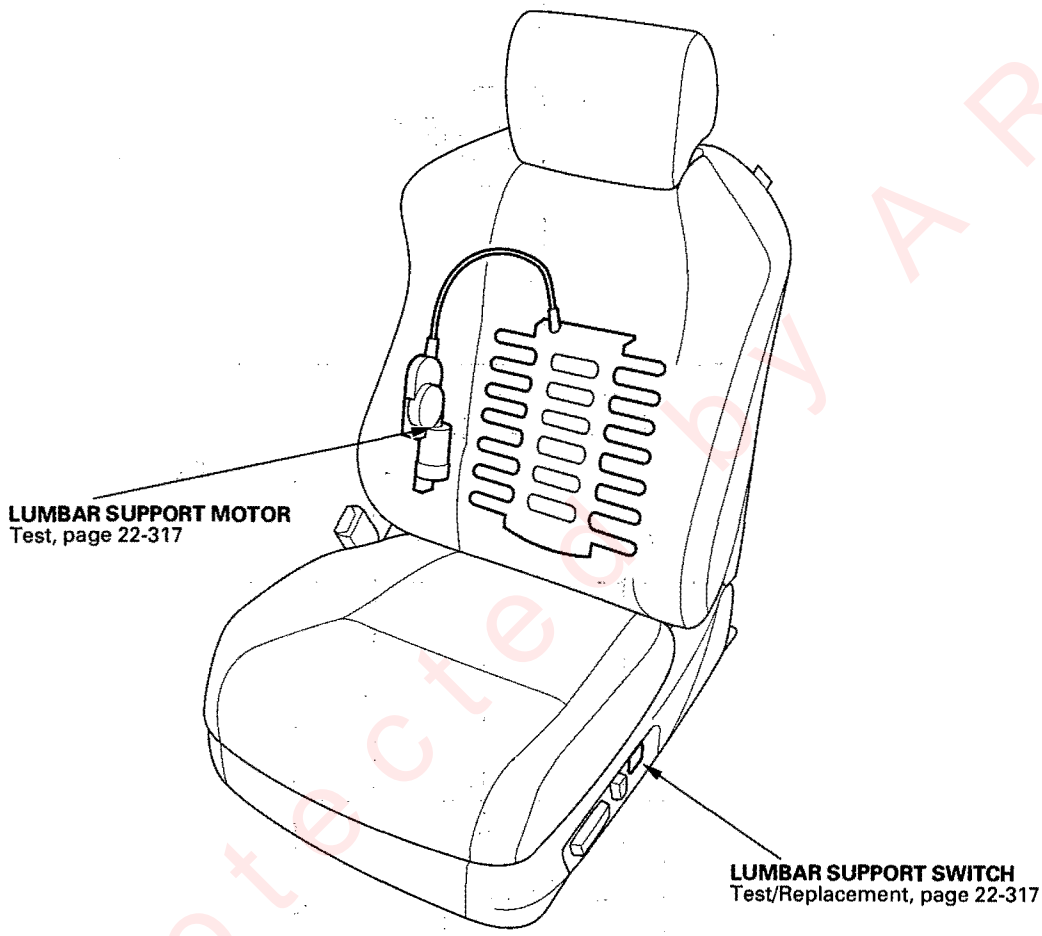

Protected by AR

Power Lumbar Support

Circuit Diagram

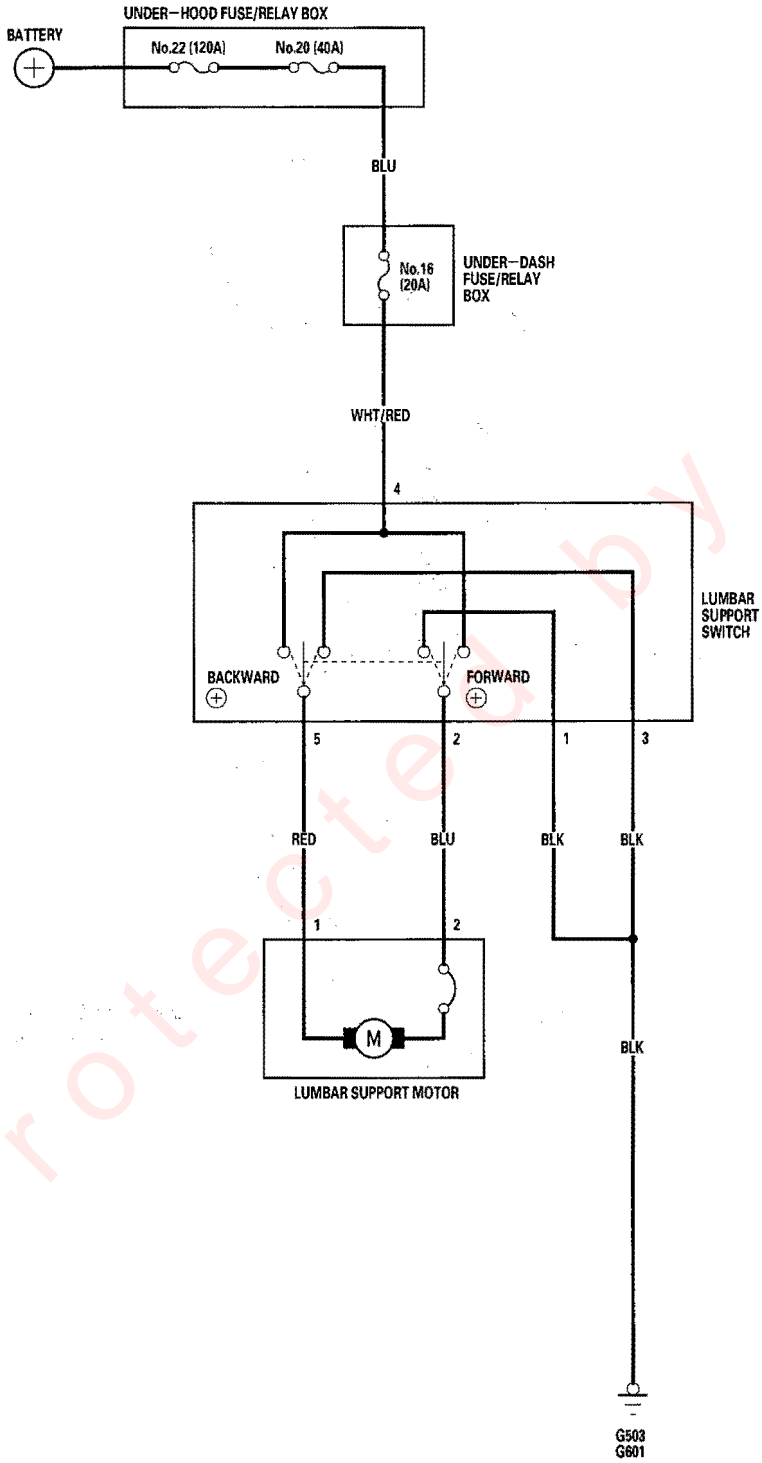

Protected by AR

Switch Test/Replacement

1. Separate the lumbar support switch cover (A) from the switch (B).

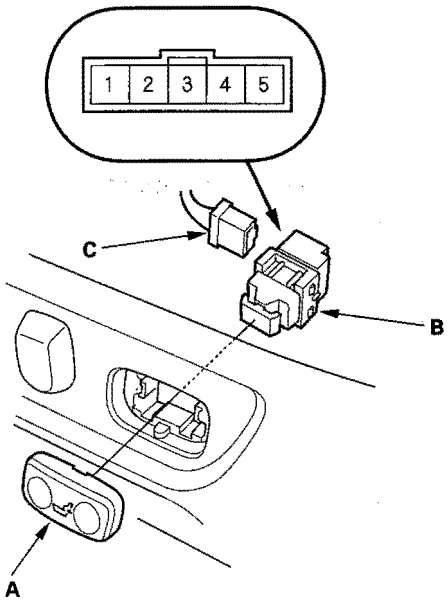

2. Disconnect the 5P connector (C) from the switch.
3. Check for continuity between the terminals in each switch position according to the table.

Terminal / Position	1	2	3	4	5
Forward		○		○	
			○		○
Backward	○	○		○	○

4. If the continuity is not as specified, replace the switch.

Motor Test

1. Remove the driver's seat (see page 20-99).
2. Disconnect the 2P connector (A) from the lumbar support motor.

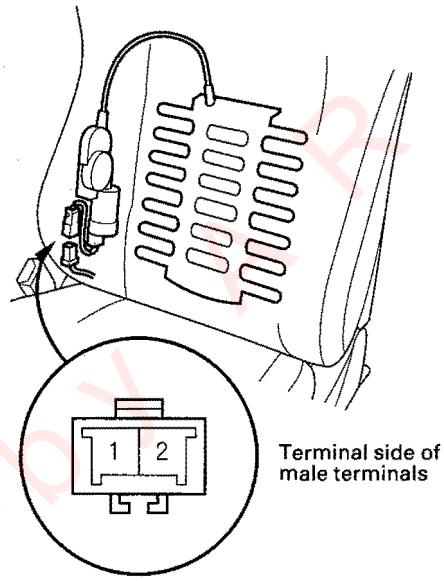

3. Test each motor by applying battery voltage and body ground to the terminals.

Terminal / Position	2	3
Forward	⊕	⊖
Backward	⊖	⊕

4. If the motor does not run or fails to run smoothly, replace it (see page 20-104).

Protected by

Component Location Index

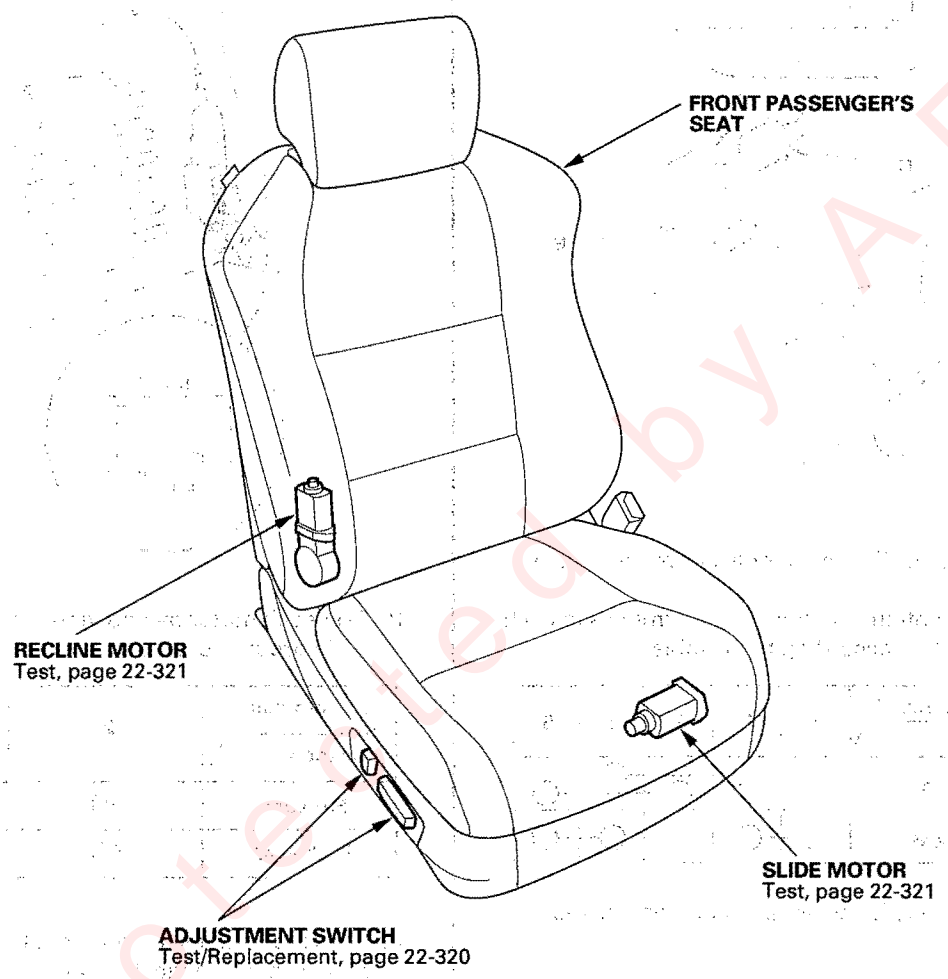

Protected by AR

Circuit Diagram - Front Passenger's Power Seat

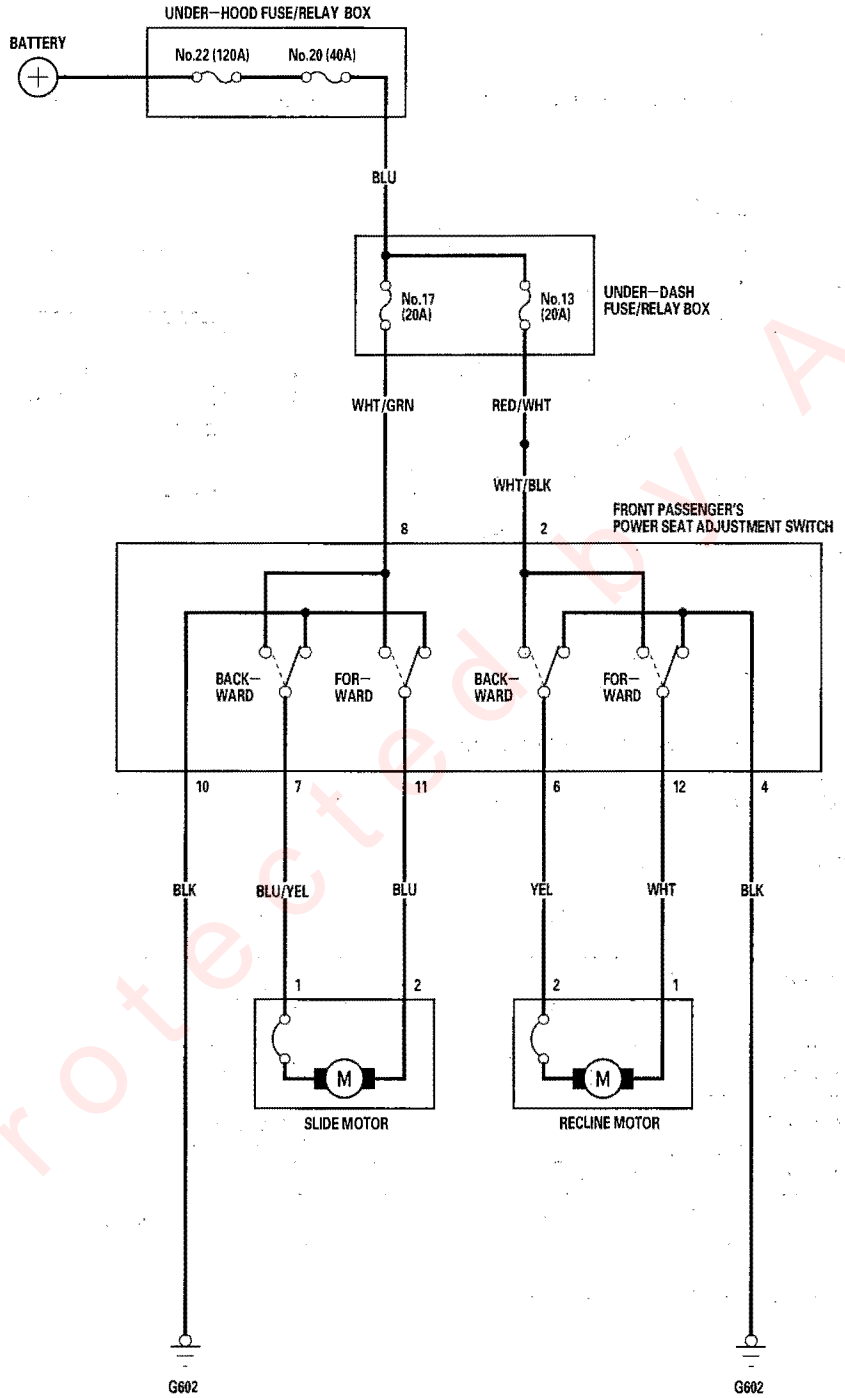

Protected by AR

Switch Test/Replacement

NOTE: For driver's power seat, refer to the Driving Position Memory System (DPMS) (see page 22-327).

Front Passenger's Seat

1. Remove the power seat adjustment switch knobs (A) and recline cover from the front passenger's seat (see page 20-101).

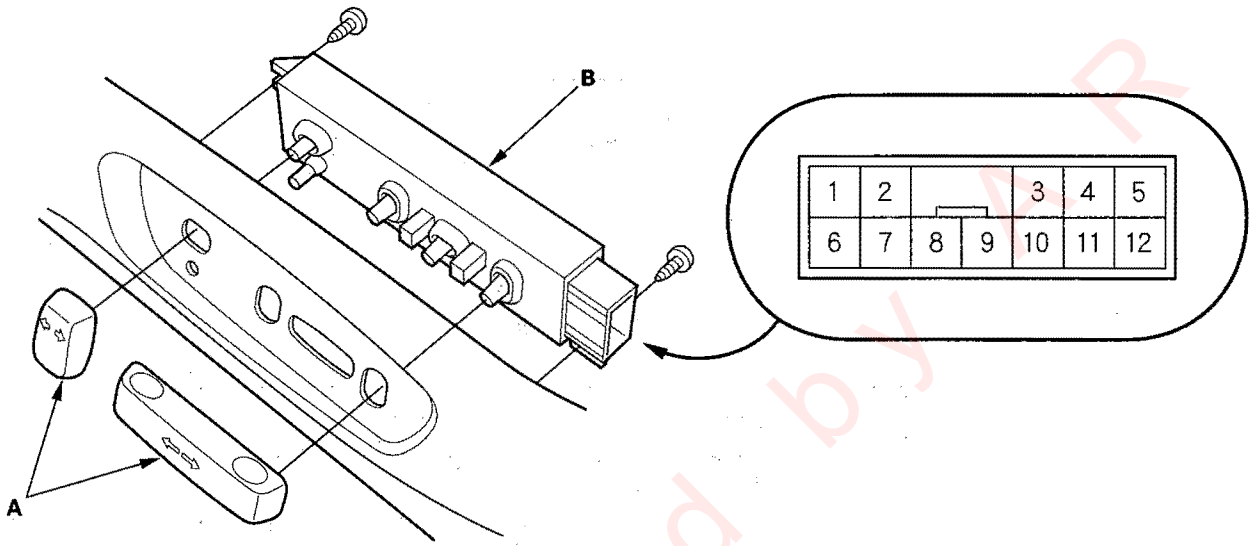

2. Remove the two screws and power seat adjustment switch (B).
3. Disconnect the 12P connector from the power seat adjustment switch.
4. Reinstall the switch knobs to the switch.
5. Check for continuity between the terminals in each switch position according to the table.

Position \ Terminal		2	4	6	7	8	10	11	12
SLIDE SWITCH	Forward				○	○	○	○	
	Backward				○	○	○	○	
RECLINE SWITCH	Forward	○	○	○					○
	Backward	○	○	○					○

6. If the continuity is not as specified, replace the switch.

Protected by MR

Motor Test

Front Passenger's Seat

1. Remove the front passenger's seat (see page 20-99).
2. Remove the power seat adjustment switch knobs and recline cover from the seat (see page 20-101).
3. Disconnect the 12P connector (A) from the power seat adjustment switch (B).

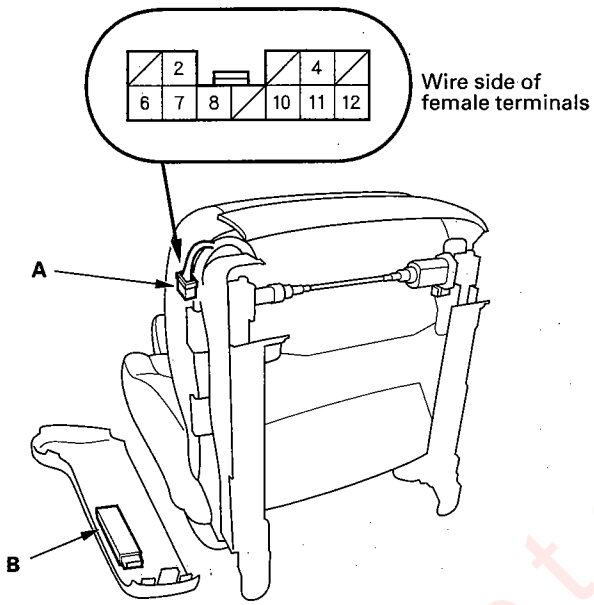

4. Test each motor by applying battery voltage and body ground to the 12P connector terminals.

Slide motor

Terminal / Position	7	11
Forward	⊖	⊕
Backward	⊕	⊖

Recline motor

Terminal / Position	6	12
Forward	⊖	⊕
Backward	⊕	⊖

5. If the motor does not run or fails to run smoothly, check for an open in the front passenger's seat wire harness between the 12P connector and each motor connector. If the harness is OK, replace the motor (see page 20-104).

Protected by A R

Component Location Index

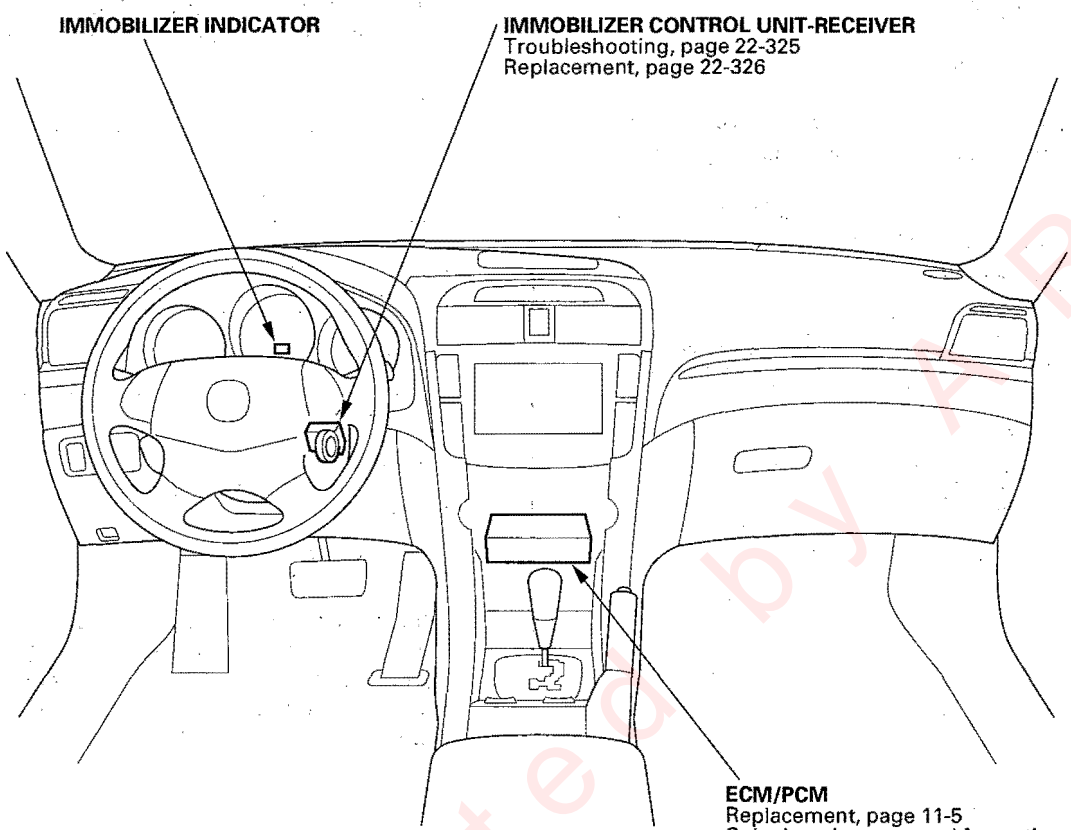

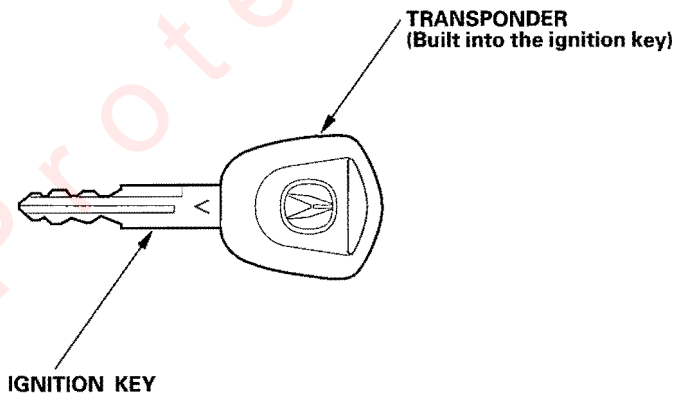

Protected by AR

System Description

The vehicle is equipped with an immobilizer system that will disable the vehicle unless the proper ignition key is used. This system consists of a transponder located in the ignition key, an immobilizer control unit-receiver, an indicator, and the ECM/PCM.

When the key is inserted in the ignition switch and turned to the on (II) position, the immobilizer control unit-receiver sends power to the transponder in the ignition key. The transponder then sends a coded signal back to the immobilizer control unit-receiver which then sends a coded signal to the ECM/PCM.

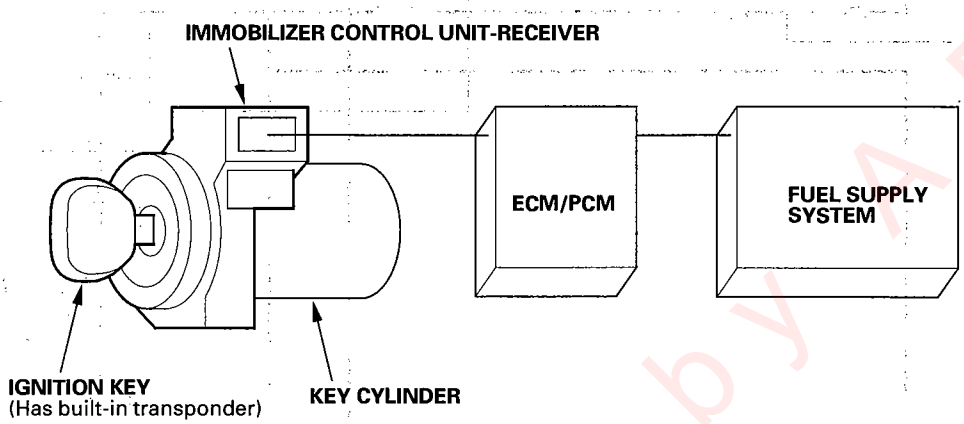

- If the proper key has been used, the immobilizer indicator will come on for about 2 seconds, then go off.
- If the wrong key has been used or the code was not received or recognized by the unit, the indicator will come on for about 2 seconds, then it will blink until the ignition switch is turned OFF.
- If the ignition switch is turned OFF, the indicator will blink for about 5 seconds to signal that the unit has reset correctly, then the indicator will go off.
- If the customer has lost their key, and cannot start the engine, contact Acura Customer Relations.

IMMOBILIZER INDICATOR BLINKING PATTERN:

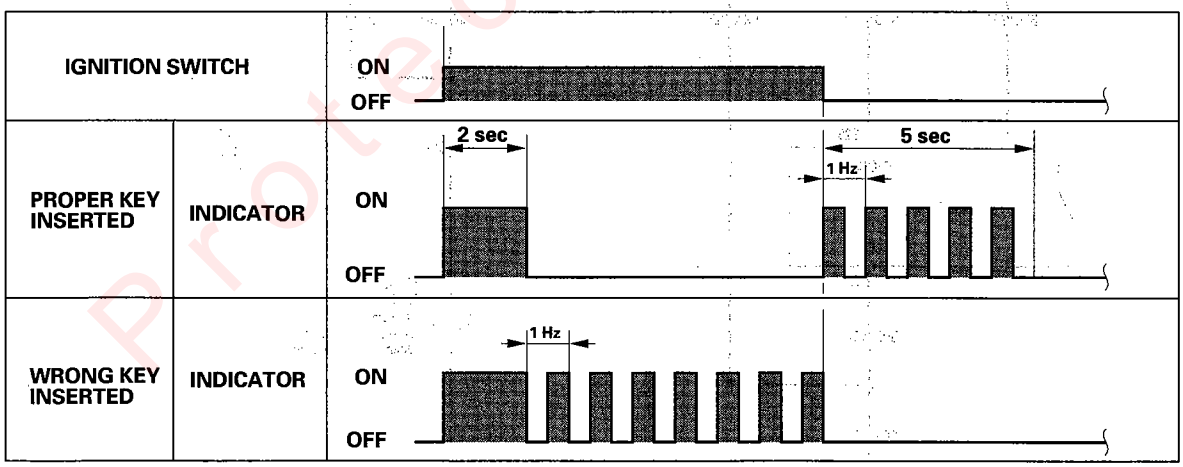

Protected by AR

Circuit Diagram

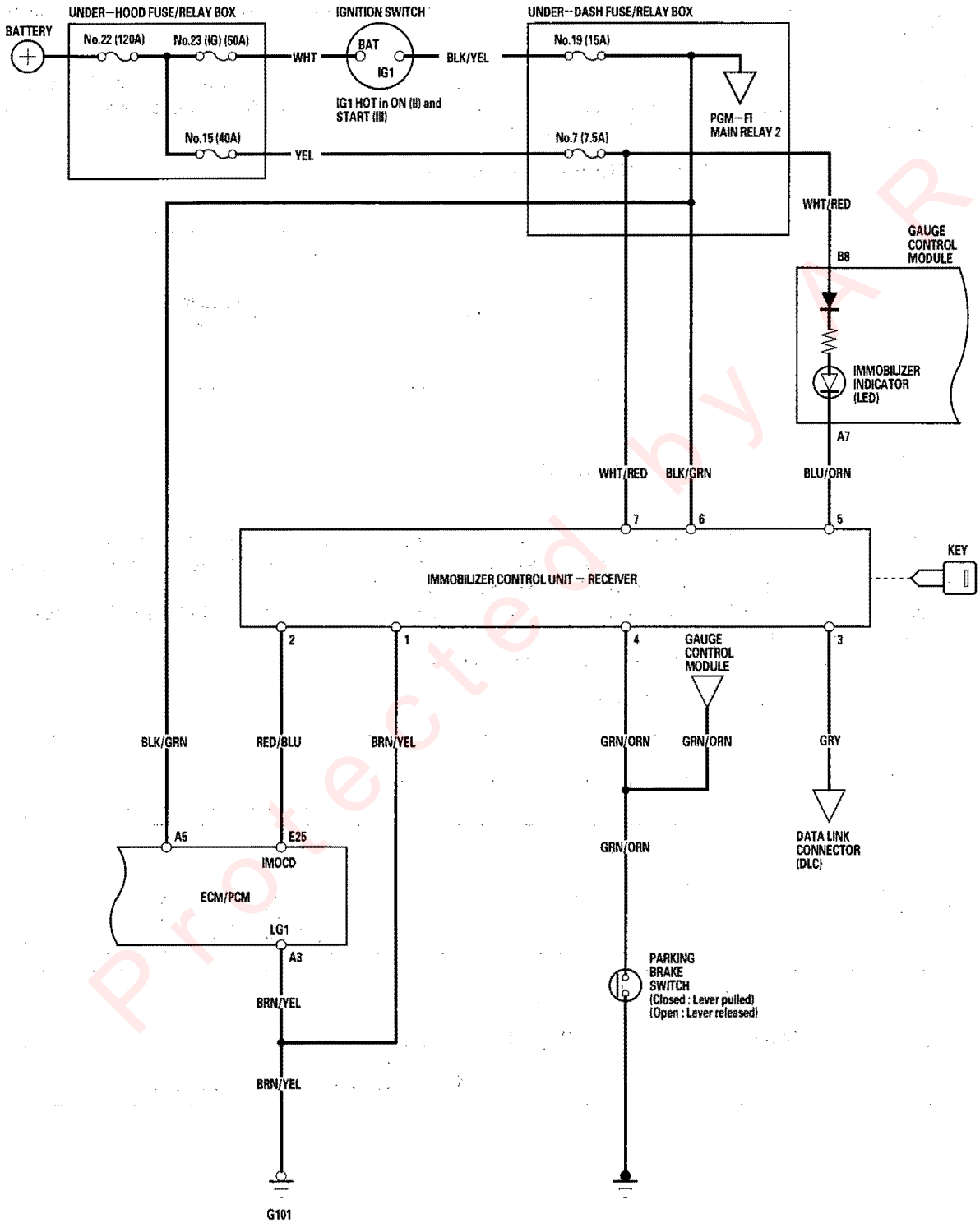

Protected by A R

Troubleshooting

Follow this procedure if the vehicle does not start after rewriting the ECM/PCM with the HDS.

Note these items before troubleshooting:

- Due to the action of the immobilizer system, the engine takes slightly more time to start than vehicle's without an immobilizer system.
- When the system is normal, and the proper key is inserted, the indicator comes on for 2 seconds, then it will go off.
- If the indicator starts to blink after 2 seconds, or if the engine does not start, repeat the starting procedure. If the engine still does not start, continue with this procedure.
- Check the ECM/PCM DTC's (see page 11-3).

1. Remove the steering column covers (see page 17-24).

2. Disconnect the 7P connector (A) from the immobilizer control unit-receiver (B).

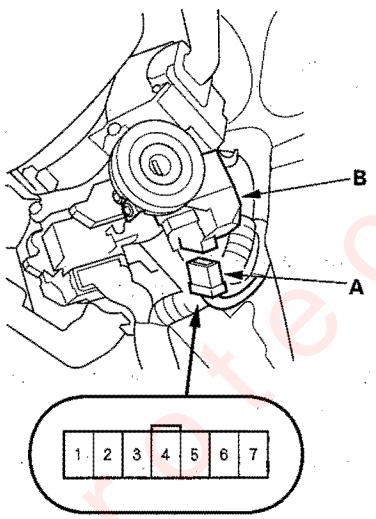

Wire side of female terminals

3. Turn the ignition switch ON (II) with the proper key.

4. Check to see if the immobilizer indicator comes on.

Does the indicator come on (blinking or solid)?

YES—Go to step 5.

NO—Go to step 8.

5. Check for voltage between the immobilizer control unit-receiver 7P connector No. 7 terminal and body ground.

Is there battery voltage?

YES—Go to step 6.

NO—Check for these problems:

- A blown No. 15 (40A) fuse in the under-hood fuse/relay box. ■
- A blown No. 7 (7.5A) fuse in the under-dash fuse/relay box. ■
- An open in the WHT/RED wire. ■

6. Check for voltage between the immobilizer control-unit receiver 7P connector No. 4 terminal and body ground with the parking brake lever applied, then released.

Is there 1 V or less, then 5 V or more?

YES—Go to step 7.

NO—Check for these problems:

- Short to ground. ■
- Faulty parking brake switch or a poor body ground of the parking brake switch. ■
- Repair an open in the GRN/ORN wire. ■

7. Check for continuity between the immobilizer control unit-receiver 7P connector No. 2 terminal and ECM/PCM 31P connector E25 terminal.

Is there continuity end to end with no continuity to ground?

YES—Go to step 8.

NO—Repair an open or short in the RED/BLU wire. ■

(cont'd)

Protected by A R

Troubleshooting (cont'd)

8. Connect the immobilizer control unit-receiver 7P connector No. 5 terminal to body ground with a jumper wire, then turn the ignition switch ON (II).

   Does the immobilizer indicator come on?

   YES – Go to step 9.

   NO – Check for these problems:

   - An open in the BLU/ORN wire between the gauge control module and immobilizer control unit-receiver. ■
   - A faulty immobilizer indicator. ■
   - A blown No. 7 (7.5A) fuse in the under-dash fuse/relay box. ■

9. Check for voltage between the immobilizer control unit-receiver 7P connector No. 6 terminal and body ground with the ignition switch ON (II).

   Is there battery voltage?

   YES – Go to step 10.

   NO – Check for these problems:

   - A blown No. 19 (15A) fuse in the under-dash fuse/relay box. ■
   - An open in the BLK/GRN wire. ■

10. Check for continuity between the immobilizer control unit-receiver 7P connector No. 1 terminal and body ground.

    Is there continuity?

    YES – Replace the immobilizer control unit-receiver. After replacing the immobilizer control unit-receiver, rewrite the unit with the HDS. ■

    NO – Repair the open in the BRN/YEL wire or poor ground (G101). ■

Immobilizer Control Unit-Receiver Replacement

1. Remove the driver's dashboard lower cover (see page 20-82).

2. Remove the steering column covers (see page 17-24).

3. Disconnect the 7P connector (A) from the immobilizer control unit-receiver (B).

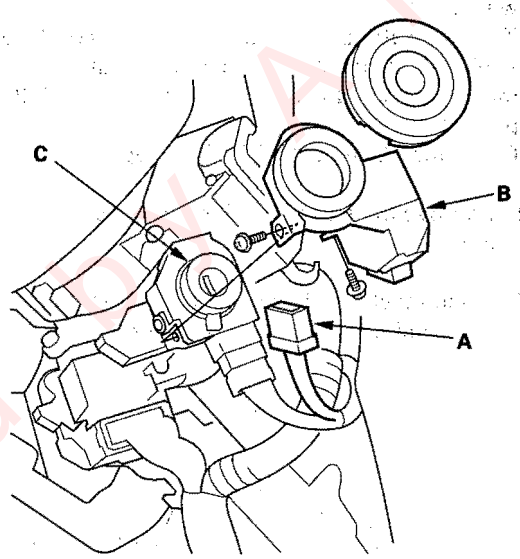

4. Remove the two screws and the immobilizer control unit-receiver from the ignition key cylinder (C).

5. Install the immobilizer control unit-receiver in the reverse order of removal.

6. After replacement, check the immobilizer system.

Protected by AR

Driving Position Memory System (DPMS)

Component Location Index

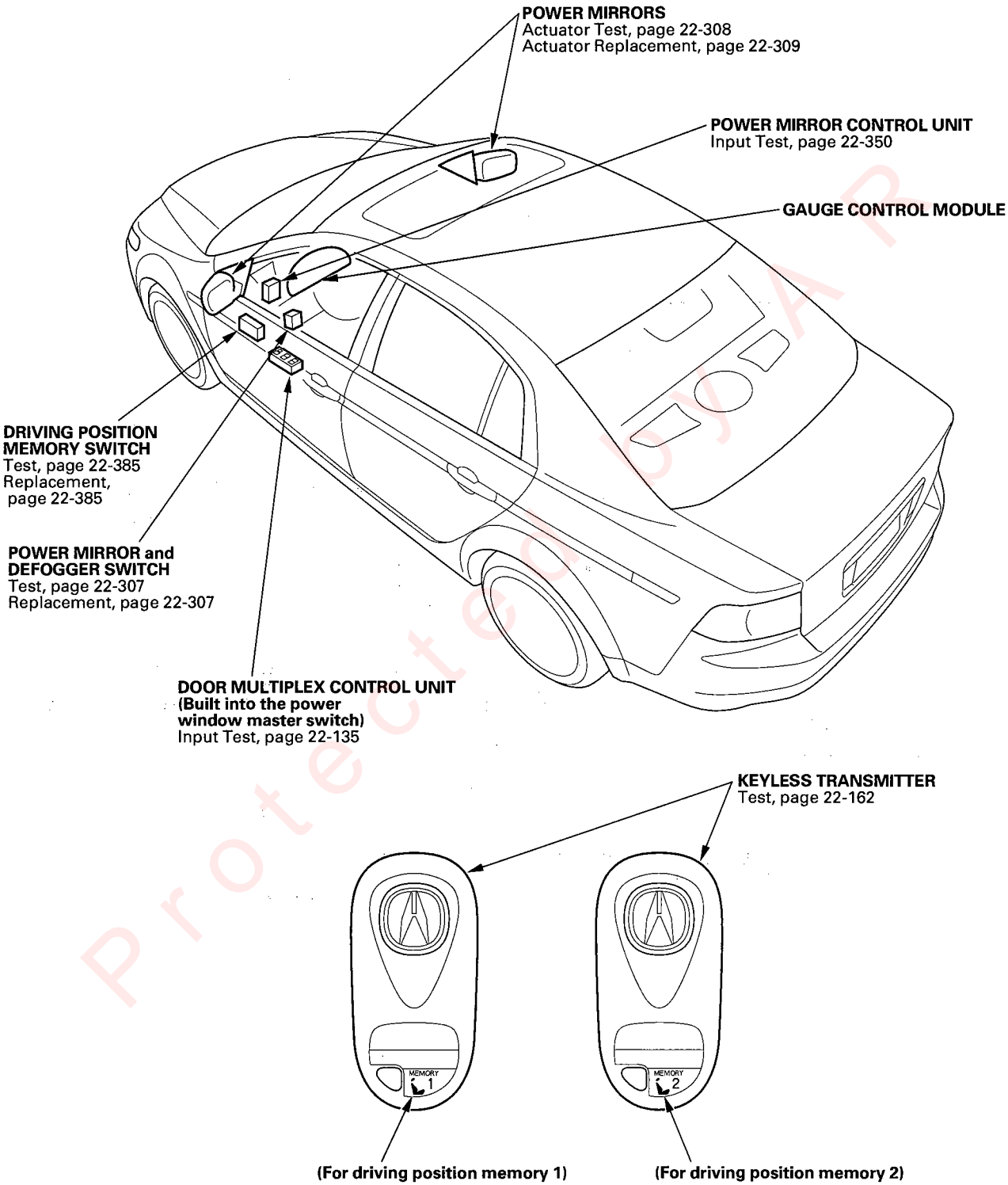

(cont'd)

Component Location Index (cont'd)

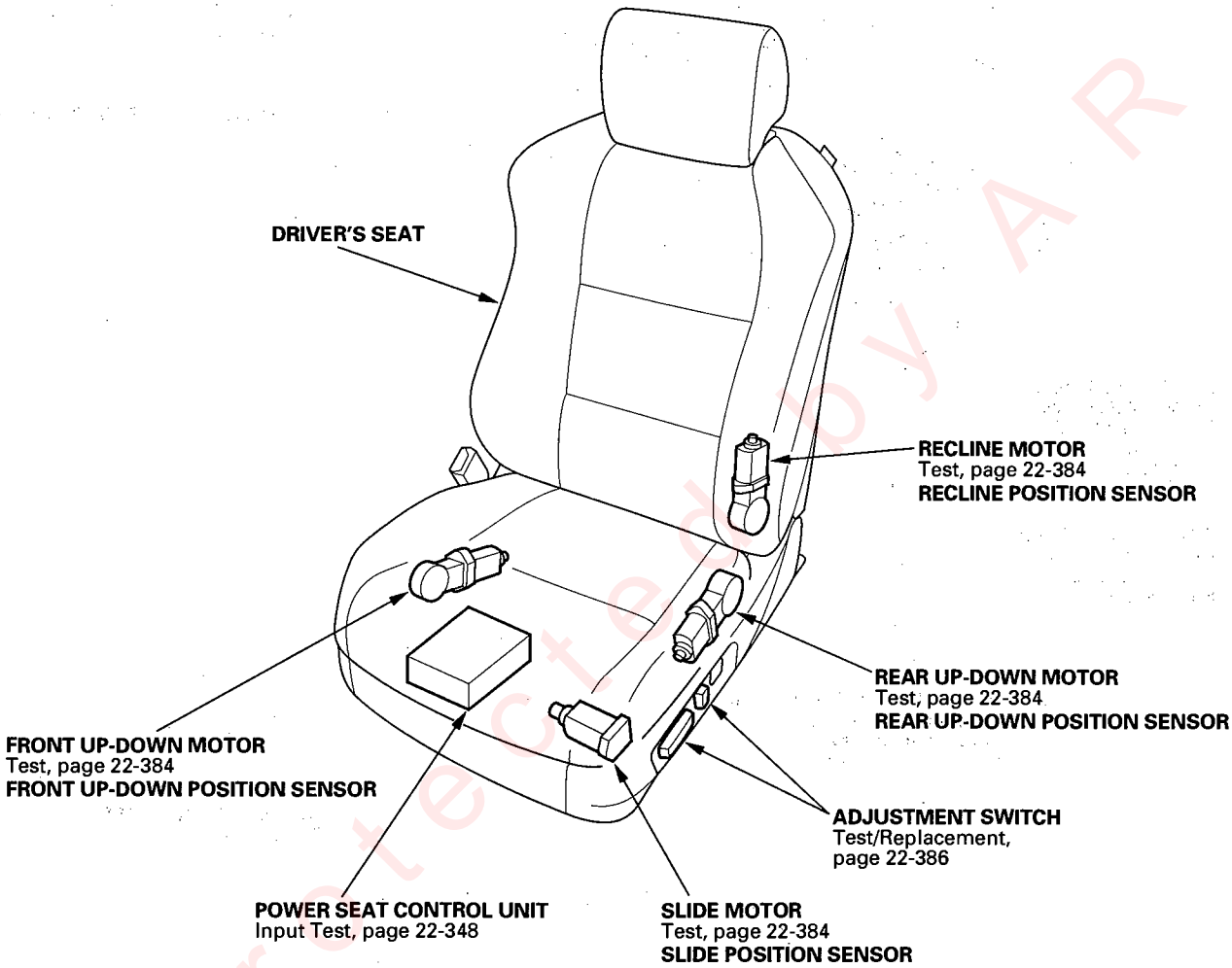

Protected by A R

System Description

The driver's seat and the power mirrors have a memory feature. All the adjustments can be memorized by pressing the MEMO button on the driving position memory switch, and then pressing one of two position buttons within 5 seconds. Pressing the appropriate position button will move the seat and the mirrors to the memorized positions. This system is integrated with the multiplex integrated control system, and has 9 wake-up and sleep mode. All digital signals are sent via shared B-CAN and UART communication lines. For more information about communication line and wake-up/sleep mode, refer to the Multiplex Control System Description (see page 22-89).

Disconnecting the battery will cancel the memorized positions.
DPMS is linked to the keyless transmitters 1 and 2. Depending on which keyless transmitter unlocks the driving memory position 1 or 2 is chosen. To turn remote DPMS feature ON linked or OFF unlinked, press and hold the LOCK and UNLOCK buttons on the keyless transmitter for about 1 second. The LED on the keyless transmitter blinks once when linked, and twice when unlinked, refer to Keyless Entry/Security Alarm System Descriptions (see page 22-140) for more information.

Memory Retrieve

When one of the two buttons on the driving position memory switch is pressed with the vehicle parked (shift lever in P position) and the driver's door closed, the seat and the mirrors move to the memorized positions.

Power Seat Position Sensors

Each motor has a sensor which detects motor rotation and sends a pulse to the power seat control unit when the motor rotates. The control unit stores the number of pulses in its memory, and the seat position is memorized.

Power Mirror Position Sensors

By means of a tilt position sensor and swing position sensor, the power mirror control circuit in the power mirror control unit detects the voltage changes caused by the movements of the mirrors. These voltage changes are stored in memory, and the power mirror positions are memorized for each stored driving position.

Reverse Mirror Control

When the vehicle is shifted to Reverse (shift lever in R position) with the power mirror selector switch in Left (or Right) position, the driver's (or passenger's) side mirror tilts down automatically to help the driver's view. The mirror will return to the previous position when the shift lever is shifted out of R position. The reverse mirror control is cancelled if the power mirror selector switch is in the center position.

Protected by A

Circuit Diagram - Power Seat

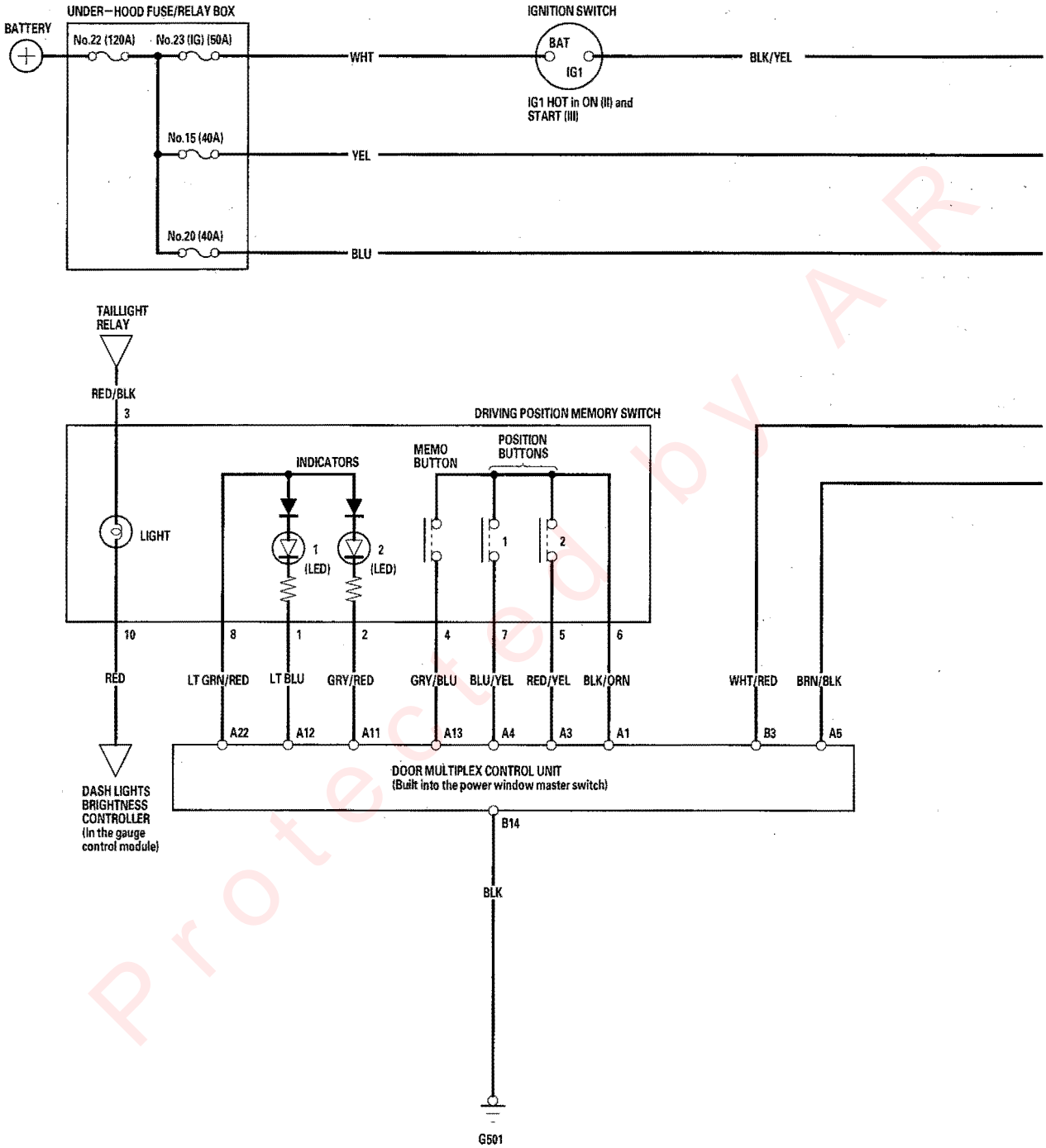

Protected by AR

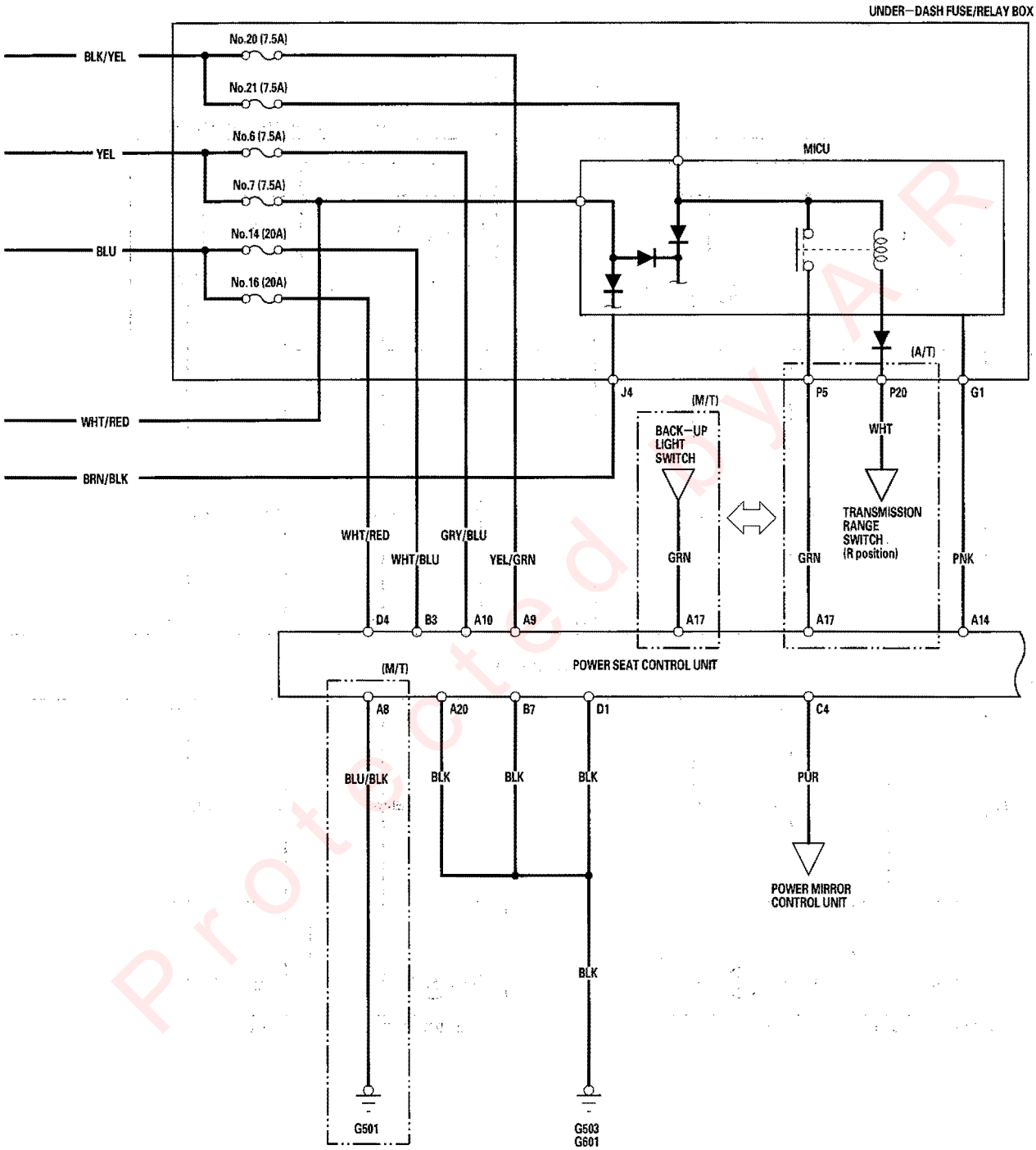

Protected by AR

(cont'd)

Circuit Diagram - Power Seat (cont'd)

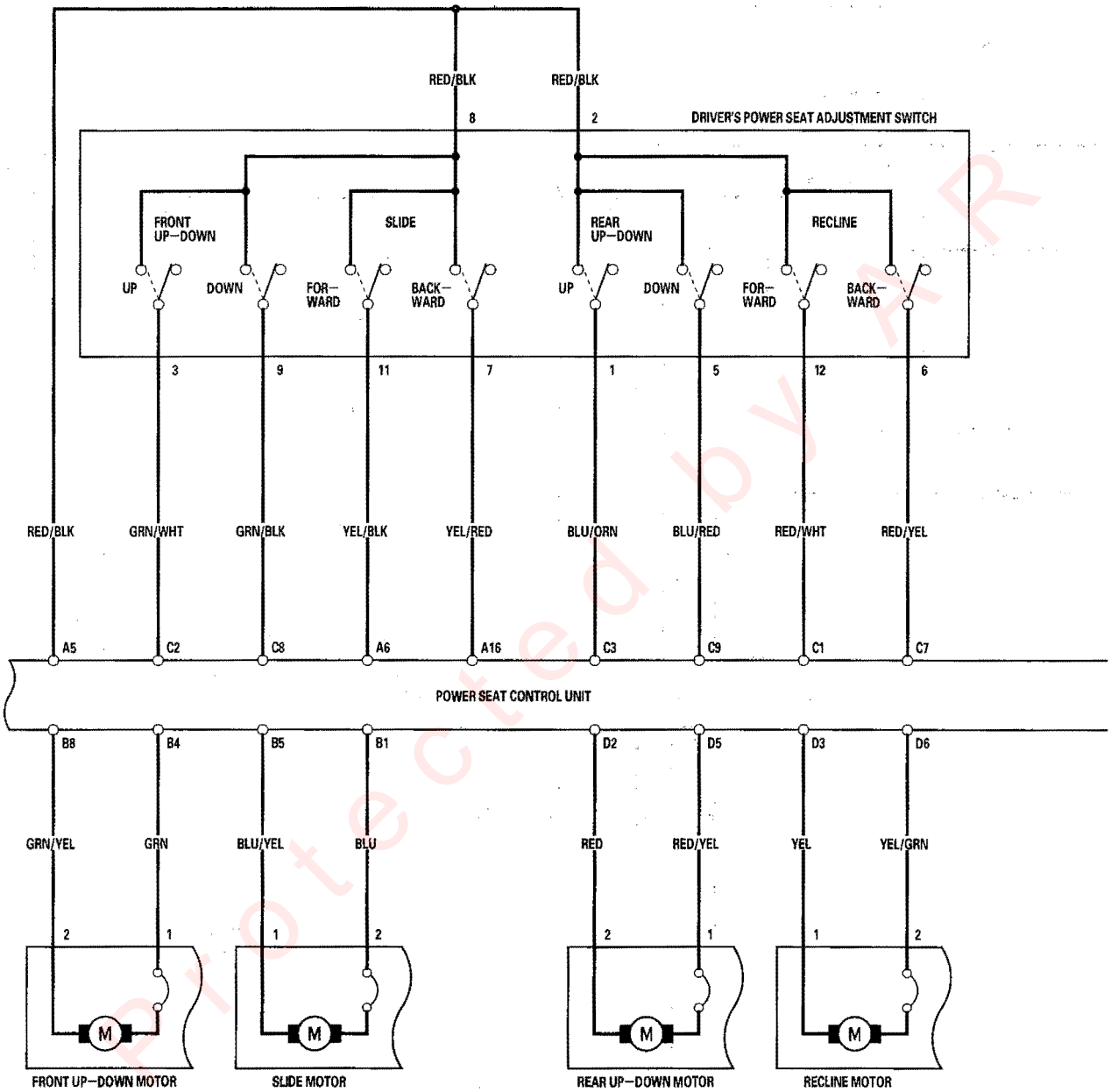

Protected by AR

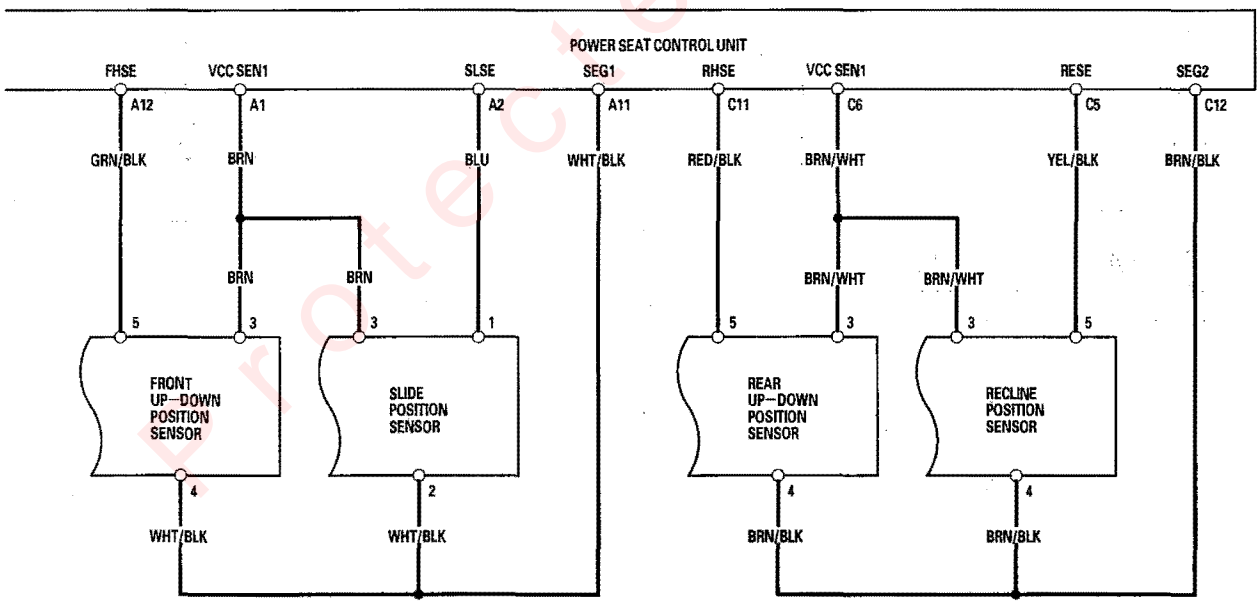

Protected by AR

Circuit Diagram - Power Mirror

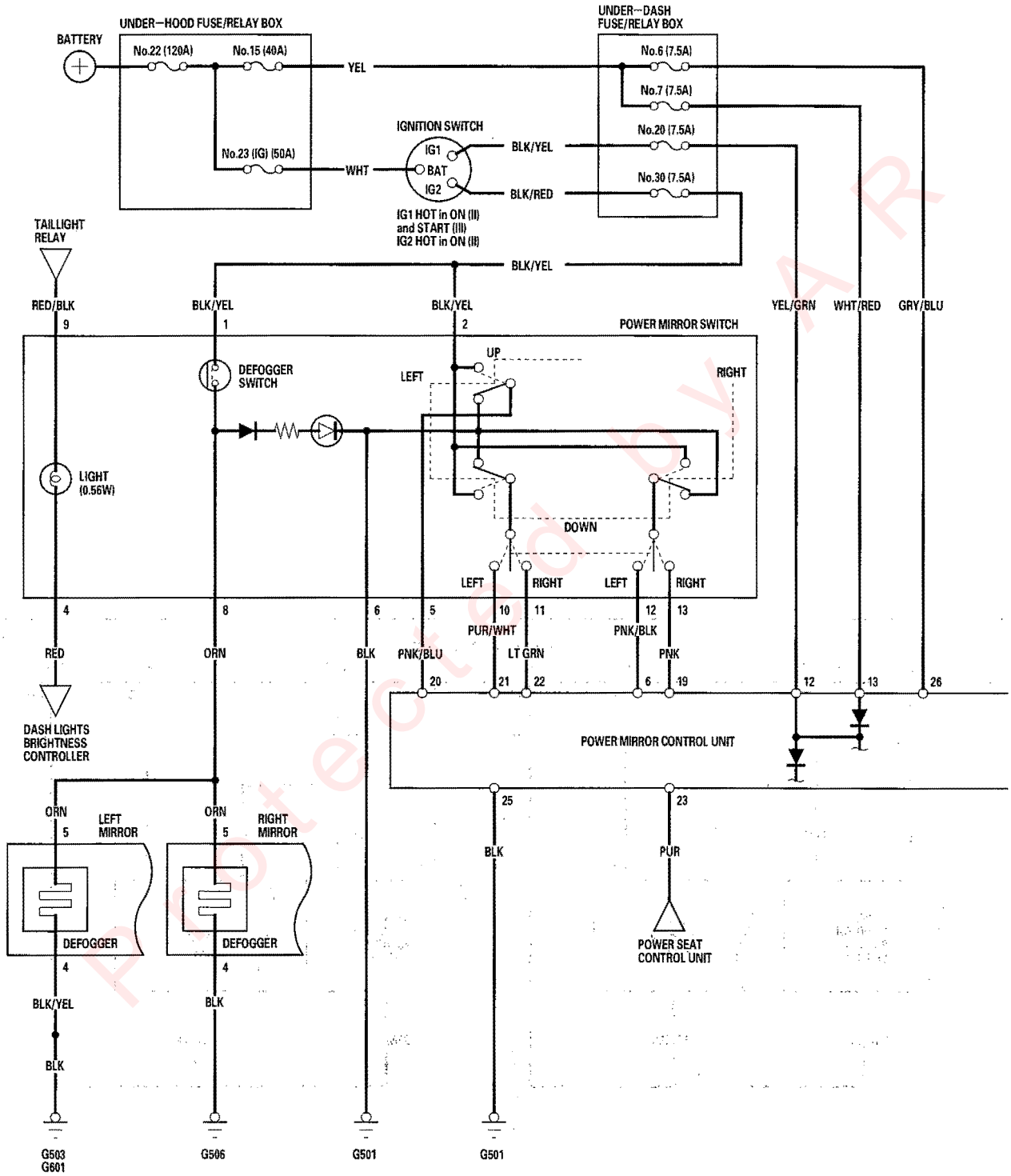

Protected by AR

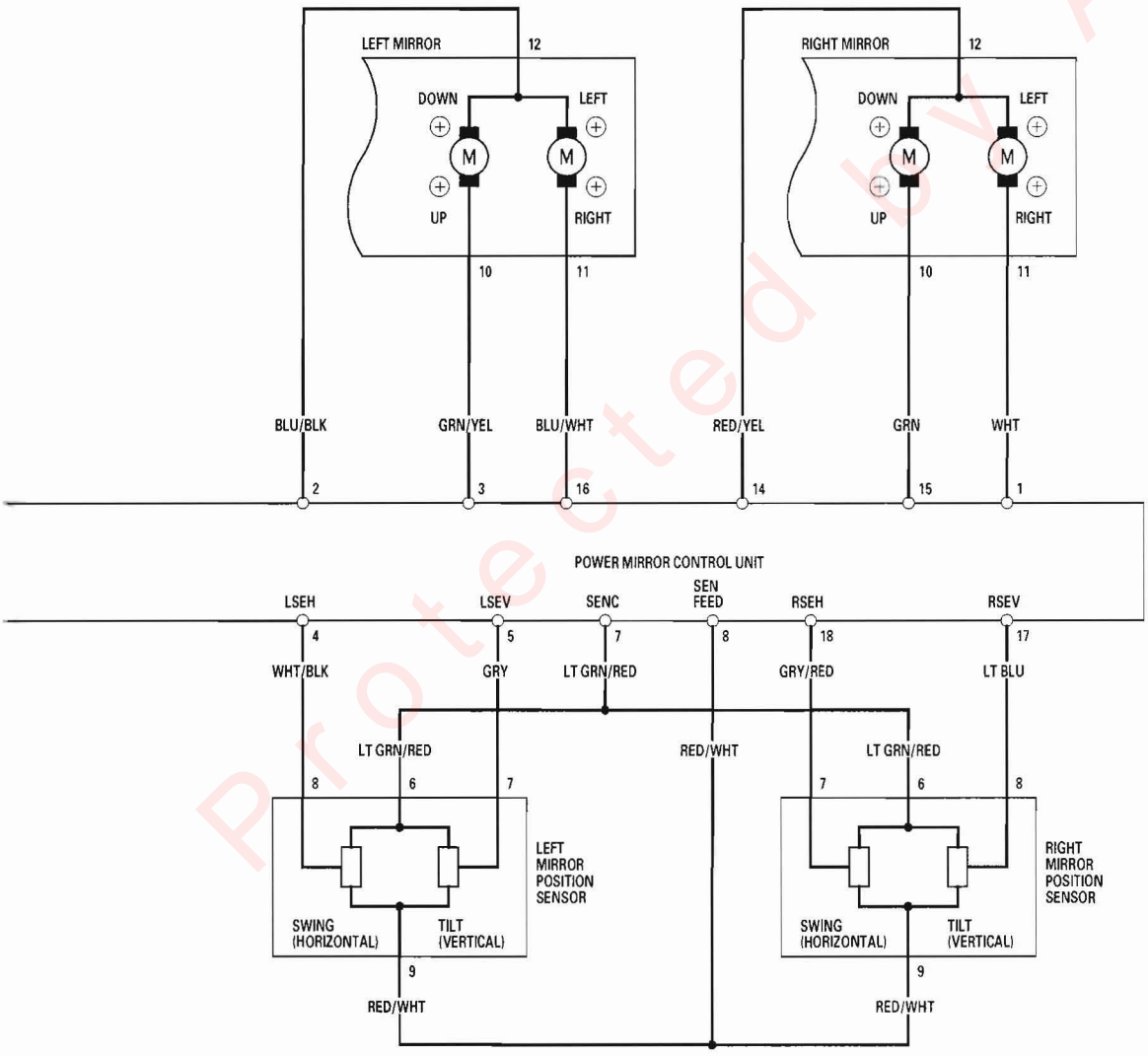

Protected by A R

General Troubleshooting Information

The self-diagnostic function of the driving position memory system detects system problems. This information can be retrieved by displaying diagnostic trouble code on the driving position memory switch indicator.

Displaying the Diagnostic Trouble Code (DTC)

1. Turn the ignition switch OFF, and move the seat to a non-memorized position.
2. Press and hold the MEMO button (A) and both position buttons (B) at the same time.

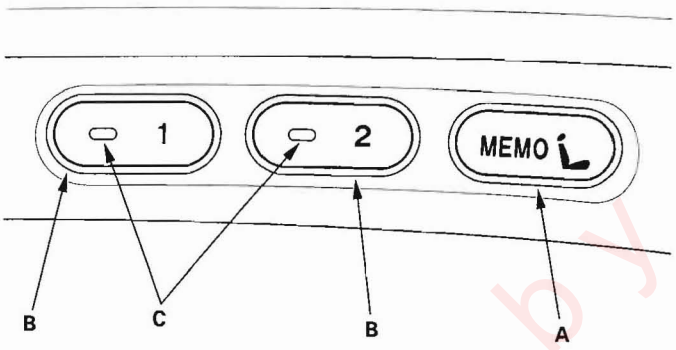

3. Turn the ignition switch ON (II), and wait at least 1 second, then release the three buttons.
4. After 1 second, the position button indicators (C) will blink to show the DTC.

DTC Indications

No System Problem Pattern
If there is no DTC stored, the indicators blink only once (3 seconds).

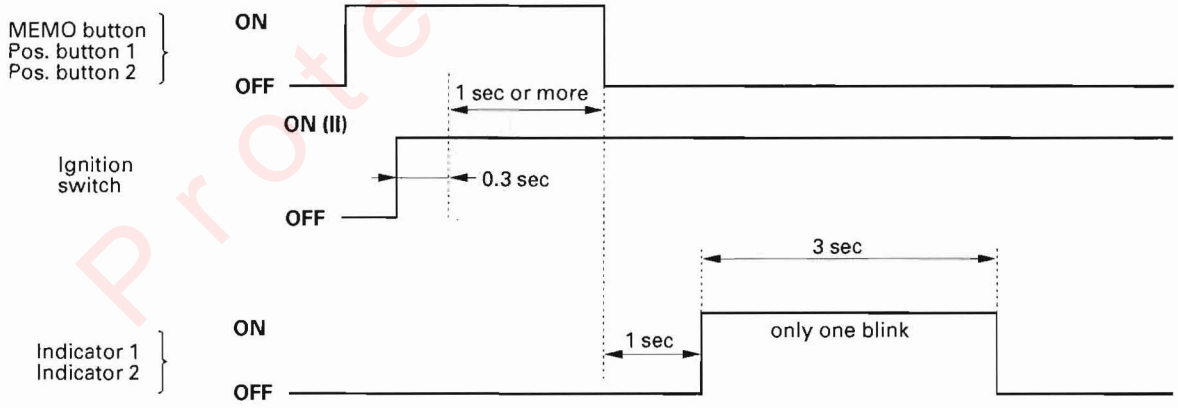

Protected by AR

System Problem Pattern
If a system problem occurs and a DTC is stored, the indicators will show the DTC. The first digit is indicated by the number of long (1 second) blinks, and the second digit is indicated by the number of short (0.26 second) blinks. There is a 3 second break between each DTC when there are multiple DTCs.

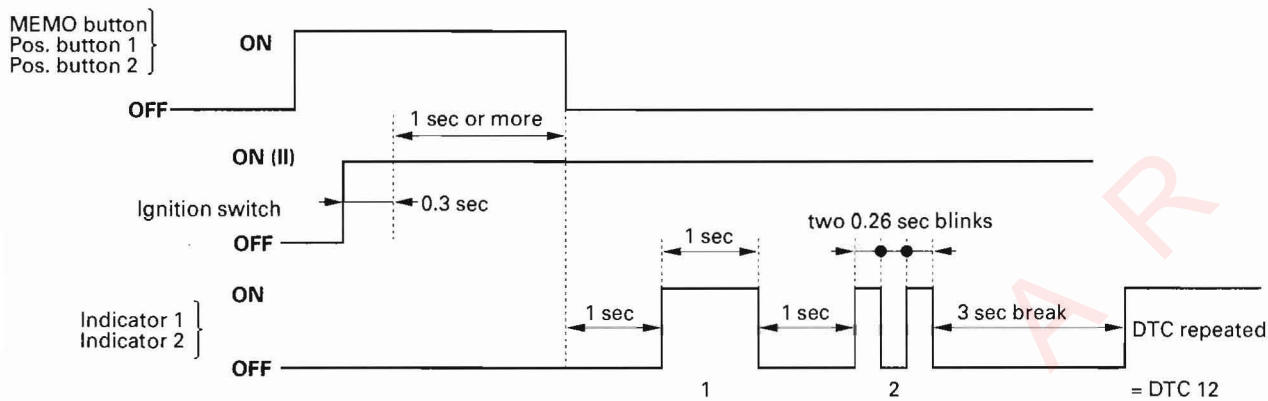

Canceling the DTC Indication

- Turn the ignition switch OFF or
- Press the MEMO button, or position button 1, or position button 2, or
- Press one of the driving position adjustment switches.

Erasing the DTC from Memory

Make sure you have the anti-theft code for the radio and the navigation system, then write down the frequencies for the XM radio channel presets. Make sure the ignition switch is OFF. Disconnect the battery negative cable for at least 30 seconds. After reconnecting the battery, enter the anti-theft codes for the radio and the navigation system, then enter the customer's XM radio channel presets. Reset the clock.

Erasing the Driving Position from Memory

1. Press and hold all three driving position memory switch bottons.
2. Turn the ignition switch ON (II).
3. Continue to hold all three driving position memory switches for more than 5 seconds, and release them in less than 10 seconds.
4. The buzzer will sound for 500 ms to confirm that all driving position data is erased.

(cont'd)

Protected by AR

General Troubleshooting Information (cont'd)

Diagnostic Trouble Code (DTC) Index

DTC	Symptom	Possible Cause	Page
31	Seat can't be adjusted at all.	Faulty power seat adjustment switch, or power seat control unit	• System input test and function test (see page 22-339) • Power seat adjustment switch test (see page 22-386)
32	Positions can't be stored or retrieved with the driving position memory switch (failure to write or read in the driver's power seat control unit).	Faulty driver's position memory switch, power seat control unit or door multiplex control unit	• System input test and function test (see page 22-339) • Multiplex control unit input troubleshooting (see page 22-130) • Driving position memory switch test (see page 22-385)
33	Positions can't be stored or retrieved with the driving position memory switch (failure to write or read in the passenger's multiplex control unit).	Faulty driver's position memory switch, or passenger's multiplex control unit	• System input test and function test (see page 22-339) • Multiplex control unit input troubleshooting (see page 22-130) • Driving position memory switch test (see page 22-385)
37	Seat can't be adjusted or can be adjusted when the vehicle is moving.	Faulty transmission range switch, or vehicle speed sensor circuit	• Transmission range switch test (see page 14-240) • Output shaft (countershaft) speed sensor test (see page 14-103)

Protected by M

System Input Test and Function Test

1. Connect the HDS to the DLC.
2. Turn the ignition switch ON (II).
3. From the Body Electrical System Selection menu select Power Seat/Power Mirror, then DTCs.
   - If DTCs are found, troubleshoot te DTCs using B-CAN System Diagnosis Test Mode A (see page 22-108).
   - If no DTCs are found, go to step 4.
4. Exit the DTC mode and select Data List from the Power Seat/Power Mirror Test Mode Menu.
5. Test each input and monitor each output under the condition listed below.
   - If the data list indication is correct, continue to the next switch. If all switches are OK, go to step 6.
   - If the data list indication is not correct, perform the appropriata test at the control unit and terminal indicated in the table.
     – Volt drop tests should be performed with the ignition switch ON and all connectors connected and the meter negative test lead attached to a good body ground.
     – Continuity tests should be performed with the ignition switch OFF and indicated terminals disconnected.

Data List Input/ Command	Condition: Data List Indication	Control Unit/Terminal Number/ Test (If applicable)	Possible cause if result is not obtained
Slide Switch Forward	Slide switch forward: ON Switch released: OFF	Power seat control unit/A6, A5 (YEL/BLK)	• Faulty switch (see page 22-386) • An open in the wire • A short in the wire • Faulty control unit
Slide Switch Backward	Slide switch back: ON Switch released: OFF	Power seat control unit/A16, A5 (YEL/RED)	• Faulty switch (see page 22-386) • An open in the wire • A short in the wire • Faulty control unit
Recline Switch Forward	Recline switch forward: ON Switch released: OFF	Power seat control unit/C1, A5 (RED/WHT)	• Faulty switch (see page 22-386) • An open in the wire • A short in the wire • Faulty control unit
Recline Switch Backward	Recline switch backward: ON Switch open: OFF	Power seat control unit/C7, A5 (RED/YEL)	• Faulty switch (see page 22-386) • An open in the wire • A short in the wire • Faulty control unit
Front Up-Down Switch Up	Front up-down switch up: ON Switch released: OFF	Power seat control unit/C2, A5 (GRN/WHT)	• Faulty switch (see page 22-386) • An open in the wire • A short in the wire • Faulty control unit
Front Up-Down Switch Down	Front up-down switch down: ON Switch released: OFF	Power seat control unit/C6, A5 (GRN/BLK)	• Faulty switch (see page 22-386) • An open in the wire • A short in the wire • Faulty control unit

(cont'd)

Protected by A R

System Input Test and Function Test (cont'd)

Data List Input/ Command	Condition: Data List Indication	Control Unit/Terminal Number/ Test (If applicable)	Possible cause if result is not obtained
Rear Up-down switch Up	Rear up-down switch up: ON Switch released: OFF	Power seat control unit/C3, A5 (BLU/ORN)	• Faulty switch (see page 22-386) • An open in the wire • A short in the wire • Faulty control unit
Rear Up-down Switch Down	Rear up-down switch down: ON Switch released: OFF	Power seat control unit/C9, A5 (BLU/RED)	• Faulty switch (see page 22-386) • An open in the wire • A short in the wire • Faulty control unit
Reverse Switch	Transmission in R: ON Transmission out of R: OFF	Power seat control unit/A17 (GRN) Transmission in R: 12 V	• Faulty switch • An open in the wire • Faulty control unit
Ignition switch for power seat control	Ignition switch on: ON Ignition switch off: OFF	Power seat control unit/A9 (YEL/GRN) Ignition switch ON (II): 12 V	• Blown No. 20 (7.5A) fuse in the under-dash fuse/relay box • An open in the wire • Faulty control unit
Slide Sensor	Seat moving forward or rearward: ON Seat not moving: OFF	Power seat control unit/A2 (BLU) Pulses as seat moves, 2.5 V average	• Faulty sensor • An open in the wire • Faulty control unit
Front Up-Down Sensor	Seat front moving up/ down: ON Seat not moving: OFF	Power seat control unit/A12 (GRN/BLK) Pulses as seat moves, 2.5 V average	• Faulty sensor • An open in the wire • Faulty control unit
Recilne Sensor	Seat back moving forward or rearward: ON Seat not moving: OFF	Power seat control unit/C5 (YEL/BLK) Pulses as seat moves, 2.5 V average	• Faulty sensor • An open in the wire • Faulty control unit
Rear Up-down Sensor	Seat rear moving up/ down: ON Seat not moving: OFF	Power seat control unit/C11 (RED/BLK) Pulses as seat moves, 2.5 V average	• Faulty sensor • An open in the wire • Faulty control unit
Mirror Select Switch LEFT	Mirror select switch in LEFT position: ON Select switch in CENTER or RIGHT position: OFF	Power mirror control unit/6 (PNK/BLK) Mirror Select switch LEFT: 0 V; CENTER or RIGHT: 5 V	• Faulty switch • An open in the wire • A short in the wire • Faulty control unit
Mirror Select Switch RIGHT	Mirror select switch in RIGHT position: ON Select switch in CENTER or LEFT position: OFF	Power mirror control unit/19 (PNK) Mirror Select switch RIGHT: 0 V; CENTER or LEFT: 5 V	• Faulty switch • An open in the wire • A short in the wire • Faulty control unit
Mirror Select Switch CENTER	Mirror select switch in CENTER position: ON Select switch in RIGHT or LEFT position: OFF	Power mirror control unit/8 (PNK/BLK), 19 (PNK) Mirror Select switch CENTER: 5 V each RIGHT or [LEFT] : 8 (5 V), 19 (0 V) [6 (0 V), 19 (5 V)]	• Faulty switch • An open in the wire • A short in the wire • Faulty control unit

Protected by ISR

Data List Input/ Command	Condition: Data List Indication	Control Unit/Terminal Number/ Test (If applicable)	Possible cause if result is not obtained
Mirror Left Switch	Mirror select switch in LEFT, then RIGHT Mirror left switch pressed: ON Mirror switch released: OFF	Power mirror control unit/20 (PNK/BLU), 21 (PUR/WHT), 22 (LT GRN), 6 (PNK/BLK), 19 (PNK) Mirror Select switch LEFT, left switch pressed: 20 (12 V), 21 (12 V), 22 (0 V), 6 (0 V), 19 (5 V) Mirror Select switch RIGHT, left switch pressed: 20 (12 V), 21 (0 V), 22 (12 V), 6 (5 V), 19 (0 V)	• Faulty switch • An open in the wire • A short in the wire • Faulty control unit
Mirror Right Switch	Mirror select switch in LEFT, then RIGHT Mirror right switch pressed: ON Mirror switch released: OFF	Power mirror control unit/20 (PNK/BLU), 21 (PUR/WHT), 22 (LT GRN), 6 (PNK/BLK), 19 (PNK) Mirror Select switch LEFT, right switch pressed: 20 (0 V), 21 (0 V), 22 (0 V), 6 (12 V), 19 (5 V) Mirror Select switch RIGHT, left switch pressed: 20 (0 V), 21 (0 V), 22 (0 V), 6 (5 V), 19 (12 V)	• Faulty switch • An open in the wire • A short in the wire • Faulty control unit
Mirror Up Switch	Mirror select switch in LEFT, then RIGHT Mirror up switch pressed: ON Mirror switch released: OFF	Power mirror control unit/20 (PNK/BLU), 21 (PUR/WHT), 22 (LT GRN), 6 (PNK/BLK), 19 (PNK) Mirror Select switch LEFT, up switch pressed: 20 (12 V), 21 (0 V), 22 (0 V), 6 (0 V), 19 (5 V) Mirror Select switch RIGHT, left switch pressed: 20 (12 V), 21 (0 V), 22 (0 V), 6 (5 V), 19 (0 V)	• Faulty switch • An open in the wire • A short in the wire • Faulty control unit
Mirror Down Switch	Mirror select switch in LEFT, then RIGHT Mirror down switch pressed: ON Mirror switch released: OFF	Power mirror control unit/20 (PNK/BLU), 21 (PUR/WHT), 22 (LT GRN), 6 (PNK/BLK), 19 (PNK) Mirror Select switch LEFT, up switch pressed: 20 (12 V), 21 (0 V), 22 (0 V), 6 (0 V), 19 (5 V) Mirror Select switch RIGHT, left switch pressed: 20 (12 V), 21 (0 V), 22 (0 V), 6 (5 V), 19 (0 V)	• Faulty switch • An open in the wire • A short in the wire • Faulty control unit
Ignition Switch for Power Mirror Control	Ignition switch on: ON Ignition switch off: OFF	Power mirror control unit/12 (YEL/GRN) Ignition switch on: Battery Voltage	• Blown No. 20 (7.5A) fese in the under-dash fuse/relay box • An open in the wire • Faulty control unit
Seat MEMO Switch	Seat MEMO switch pressed: ON Switch released: OFF	Door multiplex control unit/A13 (GRY/BLU) Seat MEMO switch pressed: 0 V; Switch released: 5 V or more	• Faulty switch • An open in the wire • Faulty control unit

(cont'd)

System Input Test and Function Test (cont'd)

Data List Input/ Command	Condition: Data List Indication	Control Unit/Terminal Number/ Test (If applicable)	Possible cause if result is not obtained
Driver 1 position Switch	Driver position 1 switch pressed: ON Switch released: OFF	Door multiplex control unit/A4 (BLU/YEL) Driver position 1 switch pressed: 0 V; Switch released: 5 V or more	• Faulty switch • An open in the wire • Faulty control unit
Driver 2 position Switch	Driver position 2 switch pressed: ON Switch released: OFF	Door multiplex control unit/A3 (RED/YEL) Driver position 2 switch pressed: 0 V; Switch released: 5 V or more	• Faulty switch • An open in the wire • Faulty control unit
Right Mirror Horizontal Sensor	Right mirror moves left/right: ON Right mirror stopped: OFF	Power mirror control unit/8 (RED/WHT), 7 (LT GRN/RED), 18 (GRY/RED) Right mirror moving from full right to full left: 8 (5 V), 7 (0 V), 18 (about 0.5 V to about 4.5 V)	• Faulty sensor • An open in the wire • Faulty control unit
Right Mirror Vertical Sensor	Right mirror moves up/down: ON Right mirror stopped: OFF	Power mirror control unit/8 (RED/WHT), 7 (LT GRN/RED), 17 (LT BLU) Right mirror moving from full down to full up: 8 (5 V), 7 (0 V), 17 (about 0.5 V to about 4.5 V)	• Faulty sensor • An open in the wire • Faulty control unit
Left Mirror Horizontal Sensor	Left mirror moves left/right: ON Right mirror stopped: OFF	Power mirror control unit/8 (RED/WHT), 7 (LT GRN/RED), 4 (WHT/BLK) Left mirror moving from full left to full right: 8 (5 V), 7 (0 V), 4 (about 0.5 V to about 4.5 V)	• Faulty sensor • An open in the wire • Faulty control unit
Left Mirror Vertical Sensor	Left mirror moves up/down: ON Right mirror stopped: OFF	Power mirror control unit/8 (RED/WHT), 7 (LT GRN/RED), 5 (GRY) Left mirror moving from full down to full up: 8 (5 V), 7 (0 V), 5 (about 0.5 V to about 4.5 V)	• Faulty sensor • An open in the wire • Faulty control unit
Right Mirror Horizontal Motor command	Right mirror commanded to move left/right: ON Right mirror stopped: OFF	Function Test: Go to step 6	N/A
Right Mirror Vertical Motor command	Right mirror commanded to move up/down: ON Right mirror stopped: OFF	Function Test: Go to step 6	N/A

Protected by FSR

Data List Input/ Command	Condition: Data List Indication	Control Unit/Terminal Number/ Test (If applicable)	Possible cause if result is not obtained
Left Mirror Horizontal Motor command	Left mirror commanded to move left/right: ON Left mirror stopped: OFF	Function Test: Go to step 6	N/A
Left Mirror Vertical Motor command	Left mirror commanded to move up/down: ON Left mirror stopped: OFF	Function Test: Go to step 6	N/A
Driver 1 Position Indicator	Dirver 1 Position Indicator on: ON Dirver 1 Position Indicator off: OFF	Function Test: Go to step 6	N/A
Driver 2 Position Indicator	Dirver 2 Position Indicator on: ON Dirver 2 Position Indicator off: OFF	Function Test: Go to step 6	N/A
Slide Motor Command	As seat moves forward or rearward: ON Seat not moving: OFF	Function Test: Go to step 6	N/A
Recline Motor Command	As seat back moves forward or rearward: ON Set not moving: OFF	Function Test: Go to step 6	N/A
Front Height Motor Command	As front of seat moves up or down: ON Seat not moving: OFF	Function Test: Go to step 6	N/A
Rear Height Motor Command	As rear of seat moves up or down: ON Seat not moving: OFF	Function Test: Go to step 6	N/A
Power Seat Buzzer Command	Power seat buzzer commanded on: ON Power seat buzzer commanded off: OFF	Function Test: Go to step 6	N/A

Protected by AR

(cont'd)

System Input Test and Function Test (cont'd)

6. Exit the Data list and select Function Test.
7. Perform each of the function tests listed in the table below. The appropriate output should occur.

- If the function operates normally, go to the next function test. If all function tests operate normally, the system is OK.
- If the function does not occur, perform the appropriate test at the control unit and terminal indicated in the table.
  - Volt drop tests should be performed with the ignition switch ON and all connectors connected
  - ContInuity tests should be perform with the ignition switch OFF and indicated terminals disconnected
  - Jumper tests should be done according to the instructions indicated.
- If the test indicates that the component operates normally, but the function will not operate by the function test or the normal use of the component, the control unit that operates that function must be faulty; replace it.
- If the test indicates that the component does not operate normally, check for an open or short in the harnesses between the component and the control unit. If the harness is OK, replace the component.

Power Seat Indicator

Function Test	Component and operation	Control Unit/Terminal Number/ Test (If applicable)	Possible cause if result is not obtained
Memory Seat Indicator 1	Memory seat indicator 1 Illuminates	Door multiplex control unit/A22 (LT GRN/RED), A12 (LT BLU) Disconnect Door Multiplex control unit connector A. Apply 12 V to A22, ground to A12; memory seat indicator 1 should Illuminate.	• Faulty switch • An open in the wire • A short in the wire
Memory Seat Indicator 2	Memory seat indicator 2 Illuminates	Door multiplex control unit/A22 (LT GRN/RED), A11 (GRY/RED) Disconnect Door Multiplex control unit connector A. Apply 12 V to A22, ground to A11; memory seat indicator 2 should Illuminate.	• Faulty switch • An open in the wire • A short in the wire

Power Seat

Function Test	Component and operation	Control Unit/Terminal Number/ Test (If applicable)	Possible cause if result is not obtained
Slide Motor – Full Forward	Seat slides forward	Power seat control unit/B3 (WHT/BLU), B7 (BLK), B1 (BLU), B5 (BLU/YEL) Disconnect power seat control unit connector B. Connect B3 to B1 and B7 to B5; driver's seat should slide forward.	• Faulty motor • An open in the wire • A short in the wire
Slide Motor – Full Backward	Seat slides rearward	Power seat control unit/B3 (WHT/BLU), B7 (BLK), B1 (BLU), B5 (BLU/YEL) Disconnect power seat control unit connector B. Connect B3 to B5 and B7 to B1; driver's seat should slide rearward.	• Faulty motor • An open in the wire • A short in the wire

Protected by AR

Power Seat (cont'd)

Function Test	Component and Operation	Control Unit/Terminal Number/ Test (If applicable)	Possible cause if result is not obtained
Front UP-DOWN motor—Full Up	Front of seat moves up	Power seat control unit/B3 (WHT/BLU), B7 (BLK), B4 (GRN), B8 (GRN/YEL) Disconnect power seat control unit connector B. Connect B3 to B8 and B7 to B4; front of driver's seat should move down.	• Faulty motor • An open in the wire • A short in the wire
Front UP-DOWN motor—Full Up	Front of seat moves up	Power seat control unit/B3 (WHT/BLU), B7 (BLK), B4 (GRN), B8 (GRN/YEL) Disconnect power seat control unit connector B. Connect B3 to B8 and B7 to B4; front of driver's seat should move down.	• Faulty motor • An open in the wire • A short in the wire
Front UP-DOWN Motor—Full Down	Front of seat moves down	Power seat control unit/B3 (WHT/BLU), B7 (BLK), B4 (GRN), B8 (GRN/YEL) Disconnect power seat control unit connector B. Connect B3 to B4 and B7 to B8; front of driver's seat should move down.	• Faulty motor • An open in the wire • A short in the wire
Rear Up-Down Motor—Full Up	Seat moves up	Power seat control unit/D4 (WHT/RED), D1 (BLK), D5 (RED/YEL), D2 (RED) Disconnect power seat control unit connector D. Connect D4 to D5 and D1 to D2; driver's seat should move up.	• Faulty motor • An open in the wire • A short in the wire
Rear Up-Down Motor—Full Down	Seat moves down	Power seat control unit/D4 (WHT/RED), D1 (BLK), D5 (RED/YEL), D2 (RED) Disconnect power seat control unit connector D. Connect D4 to D2 and D1 to D5; driver's seat should move down.	• Faulty motor • An open in the wire • A short in the wire
Recline Motor—Full Forward	Seat back moves forward	Power seat control unit/D4 (WHT/RED), D1 (BLK), D6 (YEL/GRN), D3 (YEL) Disconnect power seat control unit connector D. Connect D4 to D6 and D1 to D3; driver's seat back should move forward.	• Faulty motor • An open in the wire • A short in the wire
Recline Motor—Full Backward	Seat back moves backward	Power seat control unit/D4 (WHT/RED), D1 (BLK), D6 (YEL/GRN), D3 (YEL) Disconnect power seat control unit connector D. Connect D4 to D3 and D1 to D6; driver's seat back should move backward.	• Faulty motor • An open in the wire • A short in the wire

(cont'd)

System Input Test and Function Test (cont'd)

Power Mirror

Function Test	Component and operation	Control Unit/Terminal Number/ Test (If applicable)	Possible cause if result is not obtained
Left Power Mirror –Full Up	Left power mirror moves up	Power mirror control unit/26 (GRY/BLU), 25 (BLK), 3 (GRN/YEL), 2 (BLU/BLK) Disconnect the power mirror control unit connector. Connect terminal 26 to terminal 3 and terminal 25 to terminal 2; left mirror should move up.	• Faulty actuator • An open in the wire • A short in the wire
Left Power Mirror –Full Down	Left power mirror moves down	Power mirror control unit/26 (GRY/BLU), 25 (BLK), 3 (GRN/YEL), 2 (BLU/BLK) Disconnect the power mirror control unit connector. Connect terminal 26 to terminal 2 and terminal 25 to terminal 3; left mirror should move down.	• Faulty actuator • An open in the wire • A short in the wire
Left Power Mirror –Full Right	Left power mirror moves right	Power mirror control unit/26 (GRY/BLU), 25 (BLK), 16 (BLU/WHT), 2 (BLU/BLK) Disconnect the power mirror control unit connector. Connect terminal 26 to terminal 16 and terminal 25 to terminal 2; left mirror should move right.	• Faulty actuator • An open in the wire • A short in the wire
Left Power Mirror –Full Left	Left power mirror moves left	Power mirror control unit/26 (GRY/BLU), 25 (BLK), 16 (BLU/WHT), 2 (BLU/BLK) Disconnect the power mirror control unit connector. Connect terminal 26 to terminal 2 and terminal 25 to terminal 16; left mirror should move left.	• Faulty actuator • An open in the wire • A short in the wire
Right Power Mirror –Full Up	Right power mirror moves up	Power mirror control unit/26 (GRY/BLU), 25 (BLK), 15 (GRN), 14 (RED/YEL) Disconnect the power mirror control unit connector. Connect terminal 26 to terminal 15 and terminal 25 to terminal 14; right mirror should move up.	• Faulty actuator • An open in the wire • A short in the wire
Right Power Mirror –Full Down	Right power mirror moves down	Power mirror control unit/26 (GRY/BLU), 25 (BLK), 15 (GRN), 14 (RED/YEL) Disconnect the power mirror control unit connector. Connect terminal 26 to terminal 14 and terminal 25 to terminal 15; right mirror should move down.	• Faulty actuator • An open in the wire • A short in the wire

Protected by AR

Power Mirror (cont'd)

Function Test	Component and Operation Terminal	Control Unit/Terminal Number/ Test (If applicable)	Possible cause if result is not obtained
Right Power Mirror —Full Right	Right power mirror moves right	Power mirror control unit/26 (GRY/BLU), 25 (BLK), 1 (WHT), 14 (RED/YEL) Disconnect the power mirror control unit connector. Connect terminal 26 to terminal 1 and terminal 25 to terminal 14; right mirror should move right.	• Faulty actuator • An open in the wire • A short in the wire
Right Power Mirror —Full Left	Right power mirror moves left	Power mirror control unit/26 (GRY/BLU), 25 (BLK), 1 (WHT), 14 (RED/YEL) Disconnect the power mirror control unit connector. Connect terminal 26 to terminal 14 and terminal 25 to terminal 1; right mirror should move left.	• Faulty actuator • An open in the wire • A short in the wire
Tilt Down	Mirror select switch LEFT [RIGHT] : Left [RIGHT] mirror tilts down 5 degrees	Power mirror control unit/26 (GRY/BLU), 25 (BLK), 2 (BLU/BLK), [14 (RED/YEL)], 3 (GRN/YEL) [15 (GRN)] Disconnect the power mirror control unit connector. Connect terminal 26 to terminal 2 [14] and terminal 25 to terminal 3 [15] ; left [right] mirror should move up.	• Faulty actuator • An open in the wire • A short in the wire
Tilt Up	Mirror select switch LEFT [RIGHT] : Left [RIGHT] mirror tilts up 5 degrees	Power mirror control unit/26 (GRY/BLU), 25 (BLK), 3 (GRN/YEL), [15 (GRN)] , 2 (BLU/BLK) [14 (RED/YEL)] Disconnect the power mirror control unit connector. Connect terminal 26 to terminal 3 [15] and terminal 25 to terminal 2 [14] ; left [right] mirror should move up.	• Faulty actuator • An open in the wire • A short in the wire

Protected by A R

Power Seat Control Unit Input Test

NOTE: Before troubleshooting the DPMS, troubleshoot the multiplex integrated control system first using B-CAN System Diagnosis Test Mode A (see page 22-108).

1. Turn the ignition switch OFF.
2. Remove the driver's power seat (see page 20-99).

   NOTE: Be careful not to scratch the interior trim.
3. Disconnect the connectors from the power seat control unit (A).

   NOTE: All connectors view are from wire side of female terminals.

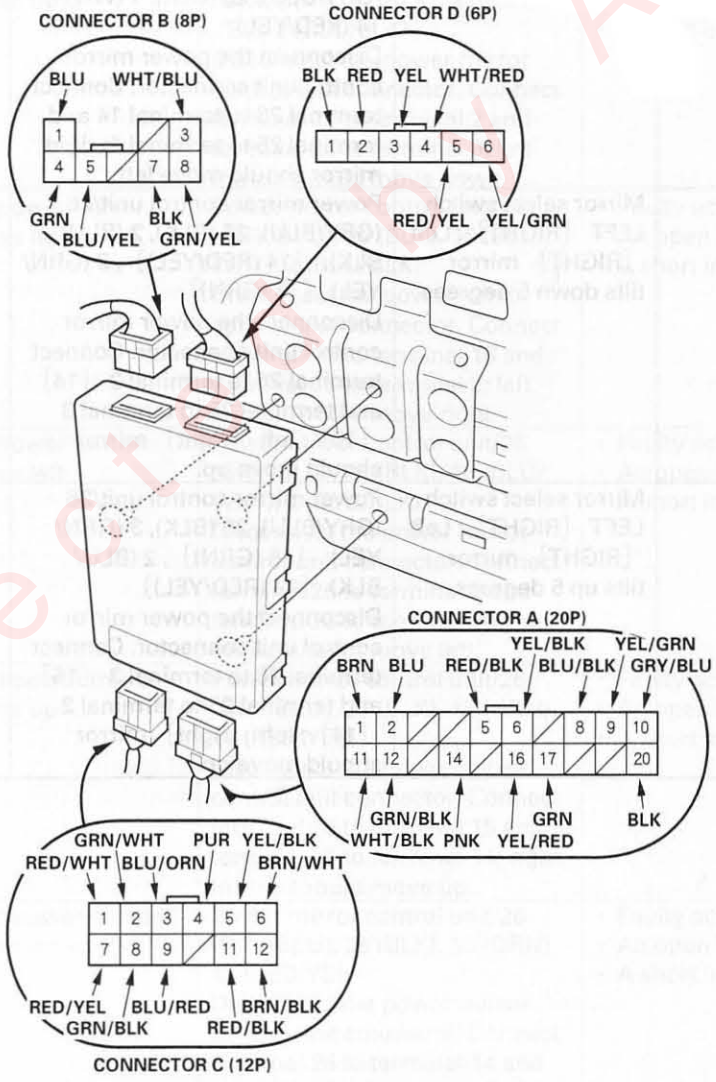

4. Inspect the connector and socket terminals to be sure they are all making good contact.

   - If the terminals are bent, loose or corroded, repair them as necessary and recheck the system.
   - If the terminals look OK, go to step 5.

Protected by AR

5. With the power seat control unit still disconnected, make these input tests at the connectors.

- If any test indicates a problem, find and correct the cause, then recheck the system.
- If all the input tests prove OK, the control unit must be faulty; replace it.

Cavity	Wire	Test condition	Test: Desired result	Possible cause if result is not obtained
A8*	BLU/BLK	Under all conditions	Check for continuity to ground: There should be continuity.	• Poor ground (G501, G503, G601) • An open in the wire
A20 . B7 . D1	BLK			
A9	YEL/GRN	Ignition switch ON (II)	Check for voltage to ground: There should be battery voltage.	• Blown No. 20 (7.5A) fuse in the under-dash fuse/relay box • An open in the wire
A10	GRY/BLU	Under all conditions	Check for voltage to ground: There should be battery voltage.	• Blown No. 15 (40A) fuse in the under-hood fuse/relay box • Blown No. 6 (7.5A) fuse in the under-dash fuse/relay box • An open in the wire
B3	WHT/BLU	Under all conditions	Check for voltage to ground: There should be battery voltage.	• Blown No. 15 (40A) fuse in the under-hood fuse/relay box • Blown No. 14 (20A) fuse in the under-dash fuse/relay box • An open in the wire
D4	WHT/RED	Under all conditions	Check for voltage to ground: There should be battery voltage.	• Blown No. 20 (40A) fuse in the under-hood fuse/relay box • Blown No. 16 (20A) fuse in the under-dash fuse/relay box • An open in the wire
A14	PNK	Under all conditions	Check for continuity between the B4 terminal and under-dash fuse/relay box connector G (6P) No. 1 terminal: There should be continuity.	An open in the wire
		Under-dash fuse/relay box connector G (6P) disconnected	Check for continuity between the A14 terminal and body ground: There should be no continuity.	A short in the wire
C4	PUR	Under all conditions	Check for continuity between the C4 terminal and power mirror control unit connector No. 23 terminal: There should be continuity end.	An open in the wire
		Power mirror control unit connector (26P) disconnected	Check for continuity between the C4 terminal and body ground: There should be no continuity.	A short in the wire

*: M/T model

Protected by R

Power Mirror Control Unit Input Test

NOTE: Before troubleshooting the DPMS, troubleshoot the multiplex integrated control system first using B-CAN System Diagnosis Test Mode A (see page 22-108).

1. Turn the ignition switch OFF.
2. Remove the dashboard lower cover (see page 20-82).
3. Disconnect the 26P connector (A) from the power mirror control unit (B).

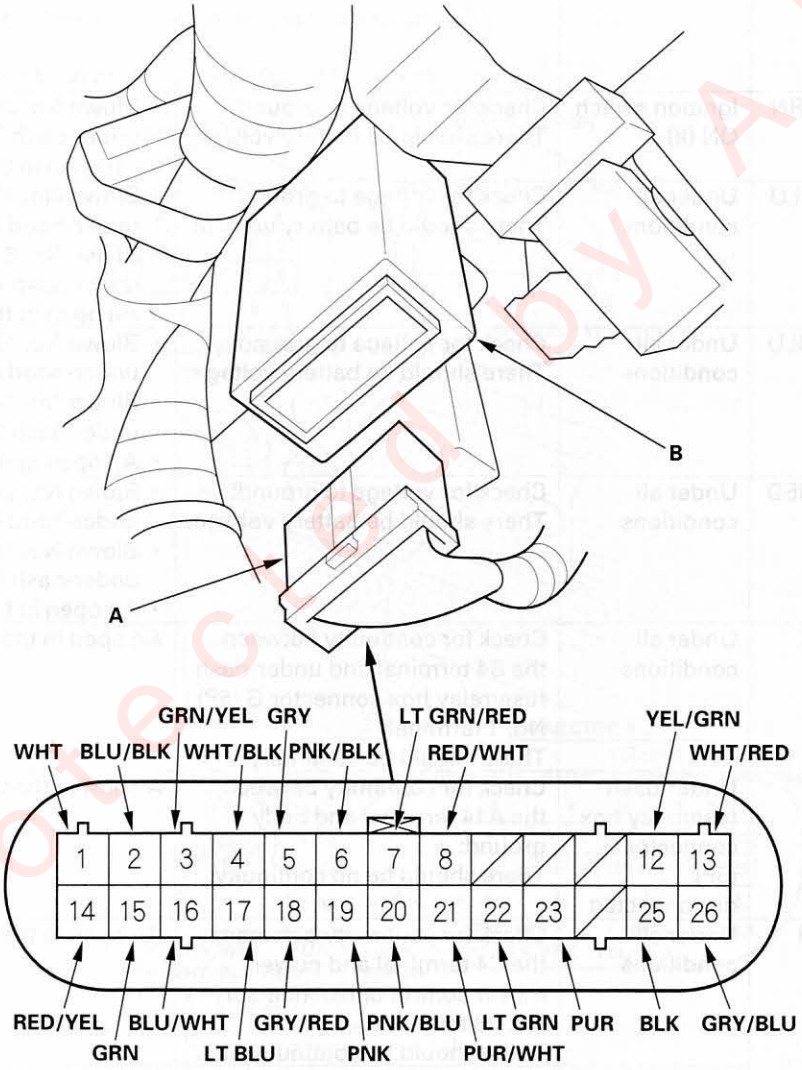

Wire side of female terminals

4. Inspect the connector and socket terminals to be sure they are all making good contact.
   - If the terminals are bent, loose or corroded, repair them as necessary, and recheck the system.
   - If the terminals look OK, go to step 5.

Protected by AR

5. With the connector still disconnected, make these input tests at the connector.

- If any test indicates a problem, find and correct the cause, then recheck the system.
- If all the input tests prove OK, the control unit must be faulty; replace it.

Cavity	Wire	Test condition	Test: Desired result	Possible cause if result is not obtained
25	BLK	Under all conditions	Check for continuity to ground: There should be continuity.	• Poor ground (G501) • An open in the wire
12	YEL/GRN	Ignition switch N (II)	Check for voltage to ground: There should be battery voltage.	• Blown No. 20 (7.5A) fuse in the under-dash fuse/relay box • An open in the wire
13	WHT/RED	Under all conditions	Check for voltage to ground: There should be battery voltage.	• Blown No. 7 (7.5A) fuse in the under-dash fuse/relay box • An open in the wire
26	GRY/BLU	Under all conditions	Check for voltage to ground: There should be battery voltage.	• Blown No. 6 (7.5A) fuse in the under-dash fuse/relay box • An open in the wire
23	PUR	Under all conditions	Check for continuity between the No. 23 terminal and power seat control unit connector B (8P) No. 4 terminal: There should be continuity.	An open in the wire
		Power seat control unit connector (12P) disconnected	Check for continuity between the No. 23 terminal and body ground: There should be no continuity.	A short in the wire

Protected by AR

DTC Troubleshooting

DTC B1802: Power Seat Control Unit Internal Error (EEPROM error)

NOTE: If you are troubleshooting multiple DTCs, be sure to follow the instructions in B-CAN system diagnosis test mode A (see page 22-108).

1. Clear the DTCs with the HDS.
2. Turn the ignition switch OFF, and then back ON (II).
3. Check for DTCs with the HDS.

   Is DTC B1802 indicated?

   YES – Replace the power seat control unit. ■

   NO – The system is OK at this time. ■

DTC B1805: Power Seat Control Unit Lost Communication with Gauge Control Modu (VSP/NE signal)

NOTE: If you are troubleshooting multiple DTCs, be sure to follow the instructions in B-CAN system diagnosis test mode A (see page 22-108).

1. Clear the DTCs with the HDS.
2. Turn the ignition switch OFF, and then back ON (II).
3. Check for DTCs with the HDS.

   Is DTC B1805 indicated?

   YES – Go to step 4.

   NO – Check for poor connections. If OK, check battery condition and charging system. ■

4. Check for DTCs with the HDS.

   Are DTC B1011, B1060, B1205 and/or B1706 indicated?

   YES – Go to step 7.

   NO – Go to step 5.

5. Turn the ignition switch OFF.
6. Do the power seat control unit input test (see page 22-348).

   Is the input test OK?

   YES – Faulty power seat control unit. ■

   NO – Refer to the power seat control unit input test and correct the cause. ■

7. Turn the ignition switch OFF.
8. Do the gauge control module input test (see page 22-134).

   Is the input test OK?

   YES – Faulty gauge control module. ■

   NO – Refer to the gauge control module input test and correct the cause. ■

Protected by AR

DTC B1806: Power Seat Control Unit Lost Communication with MICU

NOTE: If you are troubleshooting multiple DTCs, be sure to follow the instructions in B-CAN system diagnosis test mode A (see page 22-108).

1. Clear the DTCs with the HDS.
2. Turn the ignition switch OFF, and then back ON (II).
3. Check for DTCs with the HDS.

   Is DTC B1806 indicated?

   YES – Go to step 4.

   NO – Check for poor connections. If OK, check battery condition and charging system. ■
4. Check for DTCs with the HDS.

   Are DTC B1055, B1157 and/or B1255 indicated?

   YES – Go to step 7.

   NO – Go to step 5.
5. Turn the ignition switch OFF.
6. Do the power seat control unit input test (see page 22-348).

   Is the input test OK?

   YES – Faulty power seat control unit. ■

   NO – Refer to the power seat control unit input test and correct the cause. ■
7. Turn the ignition switch OFF.
8. Do the multiplex integrated control unit input test (see page 22-130).

   Is the input test OK?

   YES – Faulty multiplex integrated control unit. ■

   NO – Refer to the multiplex integrated control unit input test and correct the cause. ■

DTC B1807: Power Seat Control Unit Lost Communication with MICU (Door Switch Message)

NOTE: If you are troubleshooting multiple DTCs, be sure to follow the instructions in B-CAN system diagnosis test mode A (see page 22-108).

1. Clear the DTCs with the HDS.
2. Turn the ignition switch OFF, and then back ON (II).
3. Check for DTCs with the HDS.

   Is DTC B1807 indicated?

   YES – Go to step 4.

   NO – Check for poor connections. If OK, check battery condition and charging system. ■
4. Check for DTCs with the HDS.

   Are DTC B1057 and/or B1159 indicated?

   YES – Go to step 7.

   NO – Go to step 5.
5. Turn the ignition switch OFF.
6. Do the power seat control unit input test (see page 22-348).

   Is the input test OK?

   YES – Faulty power seat control unit. ■

   NO – Refer to the power seat control unit input test and correct the cause. ■
7. Turn the ignition switch OFF.
8. Do the multiplex integrated control unit input test (see page 22-130).

   Is the input test OK?

   YES – Faulty multiplex integrated control unit. ■

   NO – Refer to the multiplex integrated control unit input test and correct the cause. ■

Protected by AR

DTC Troubleshooting (cont'd)

DTC B1808: Power Seat Control Unit Lost Communication with Gauge Control Module (A/T Message)

NOTE: If you are troubleshooting multiple DTCs, be sure to follow the instructions in B-CAN system diagnosis test mode A (see page 22-108).

1. Clear the DTCs with the HDS.
2. Turn the ignition switch OFF, and then back ON (II).
3. Check for DTCs with the HDS.

   Is DTC B1808 indicated?

   YES – Go to step 4.

   NO – Check for poor connections. If OK, check battery condition and charging system. ■
4. Check for DTCs with the HDS.

   Are DTC B1008 and/or B1061 indicated?

   YES – Go to step 7.

   NO – Go to step 5.
5. Turn the ignition switch OFF.
6. Do the power seat control unit input test (see page 22-348).

   Is the input test OK?

   YES – Faulty power seat control unit. ■

   NO – Refer to the power seat control unit input test and correct the cause. ■
7. Turn the ignition switch OFF.
8. Do the gauge control module input test (see page 22-134).

   Is the input test OK?

   YES – Faulty gauge control module. ■

   NO – Refer to the gauge control module input test and correct the cause. ■

DTC B1809: Power Seat Control Unit Lost Communication with Door Multiplex Control Unit (MEMSW Message)

NOTE: If you are troubleshooting multiple DTCs, be sure to follow the instructions in B-CAN system diagnosis test mode A (see page 22-108).

1. Clear the DTCs with the HDS.
2. Turn the ignition switch OFF, and then back ON (II).
3. Check for DTCs with the HDS.

   Is DTC B1809 indicated?

   YES – Go to step 4.

   NO – Check for poor connections. If OK, check battery condition and charging system. ■
4. Check for DTCs with the HDS.

   Are DTC B1006, B1010, B1058, B1059 and/or 1160 indicated?

   YES – Go to step 7.

   NO – Go to step 5.
5. Turn the ignition switch OFF.
6. Do the power seat control unit input test (see page 22-348).

   Is the input test OK?

   YES – Faulty power seat control unit. ■

   NO – Refer to the power seat control unit input test and correct the cause. ■
7. Turn the ignition switch OFF.
8. Do the door multiplex control unit input test (see page 22-135).

   Is the input test OK?

   YES – Faulty door multiplex control unit. ■

   NO – Refer to the door multiplex control unit input test and correct the cause. ■

Protected by A R

DTC B1825: Slide Motor Pulse Error

NOTE: If you are troubleshooting multiple DTCs, be sure to follow the instructions in B-CAN system diagnosis test mode A (see page 22-108).

1. Clear the DTC with the HDS.
2. Turn the ignition switch OFF, and then back ON (II).
3. Slide the power seat forward and backward with the power seat adjustment switch for more than 2 seconds, in each direction.

   Does the motor run continuously for more than 2 seconds?

   YES – Intermittent failure, the system is OK at this time. Check for a poor connection at the sensor and at the power seat control unit connector A (20P). ■

   NO – Go to step 4.
4. Slide the power seat forward and backward with the power seat adjustment switch again.

   Does the motor run for about 1 second?

   YES – Go to step 5.

   NO – Go to step 16.
5. Turn the ignition switch OFF.
6. Remove the driver's power seat (see page 20-99).
7. Disconnect the power seat control unit connector A (20P), slide position sensor connector (3P), and front up-down motor/position sensor connector (5P).
8. Check for continuity between the slide position sensor connector (3P) No. 1 terminal and power seat control unit connector A (20P) No. 2 terminal.

SLIDE POSITION SENSOR CONNECTOR (3P)

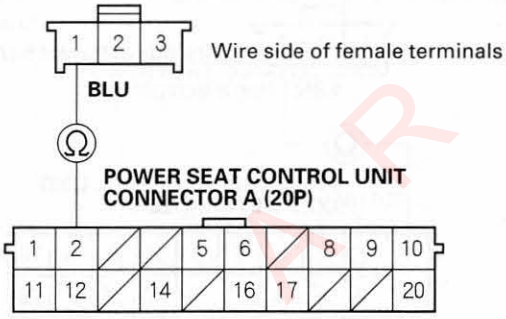

Is there continuity?

YES – Go to step 9.

NO – Repair open in the BLU wire. ■

9. Check for continuity between the slide position sensor connector (3P) No. 1 terminal and body ground.

SLIDE POSITION SENSOR CONNECTOR (3P)

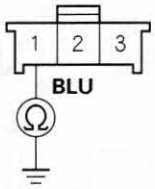

Wire side of female terminals

Is there continuity?

YES – Repair a short in the BLU wire. ■

NO – Go to step 10.

(cont'd)

Protected by ACR

DTC Troubleshooting (cont'd)

10. Check for continuity between the slide position sensor connector (3P) No. 3 terminal and power seat control unit connector A (20P) No. 1 terminal.

SLIDE POSITION SENSOR CONNECTOR (3P)

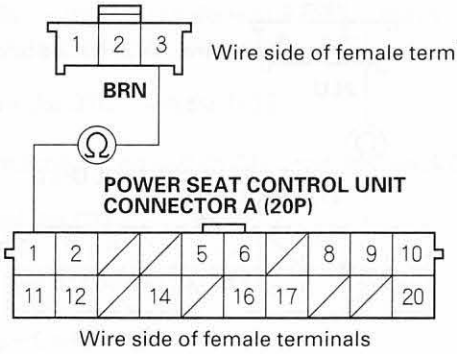

Is there continuity?

YES – Go to step 11.

NO – Repair open in the BRN wire. ■

11. Check for continuity between the slide position sensor connector (3P) No. 3 terminal and body ground.

SLIDE POSITION SENSOR CONNECTOR (3P)

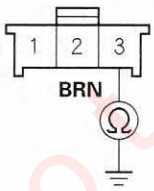

Is there continuity?

YES – Repair a short in the BRN wire. ■

NO – Go to step 12.

12. Check for continuity between the slide position sensor connector (3P) No. 2 terminal and power seat control unit connector A (20P) No. 11 terminal.

POWER SEAT CONTROL UNIT CONNECTOR A (20P)

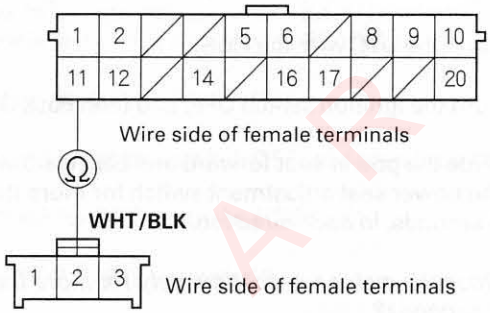

SLIDE POSITION SENSOR CONNECTOR (3P)

Is there continuity?

YES – Go to step 13.

NO – Repair open in the WHT/BLK wire. ■

Protected by AR

13. Reconnect the power seat control unit connector A (20P).

14. Turn the ignition switch ON (II).

15. Measure voltage between the power seat control unit connector A (20P) No. 1 and No. 11 terminals.

POWER SEAT CONTROL UNIT CONNECTOR A (20P)

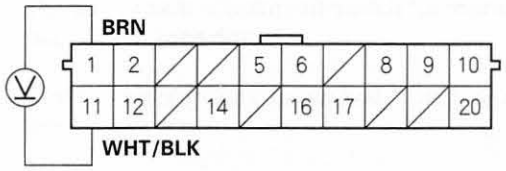

Wire side of female terminals

Is there about 5 V?

YES – Replace the slide position motor/sensor. ■

NO – Replace the power seat control unit. ■

16. Turn the ignition switch OFF.

17. Check the No. 14 (20A) fuse in the under-dash fuse/relay box.

Is the fuse OK?

YES – Go to step 18.

NO – Replace the fuse and retest. If the fuse blows again, repair the short in the wire. ■

18. Disconnect the power seat control unit connector B (8P).

19. Measure the voltage between the No. 3 terminal of power seat control unit connector B (8P) and body ground.

POWER SEAT CONTROL UNIT CONNECTOR B (8P)

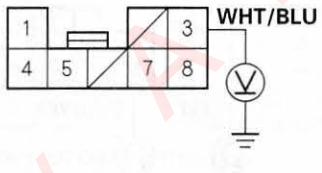

Wire side of female terminals

Is there battery voltage?

YES – Go to step 20.

NO – Repair an open in the wire between the under-dash fuse/relay box and the power seat control unit. ■

20. Check for continuity between the No. 7 terminal of power seat control unit connector B (8P) and body ground.

POWER SEAT CONTROL UNIT CONNECTOR B (8P)

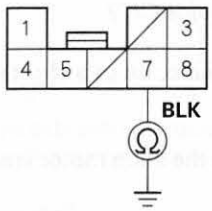

Wire side of female terminals

Is there continuity?

YES – Go to step 21.

NO – Repair an open in the wire between the power seat control unit and G503, G601. If the wire is OK, repair G503, G601. ■

(cont'd)

Protected by ARR

DTC Troubleshooting (cont'd)

21. Disconnect the slide motor connector (2P).

22. Check for continuity between the following terminals of the power seat control unit connector B (8P) and the slide motor connector (2P).

8P:	2P:
No. 1	No. 2
No. 5	No. 1

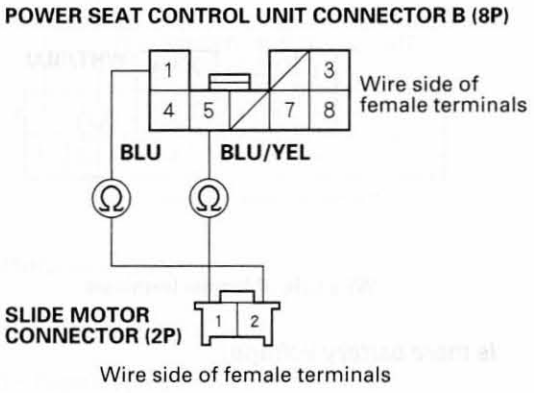

Is there continuity?

YES – Go to step 23.

NO – Repair an open in the wire between the power seat control unit connector B (8P) and the slide motor connector (2P). ■

23. Remove the driver's power seat (see page 20-99).

24. Test the slide motor (see page 22-384).

Is the slide motor OK?

YES – Repair an open or a short in the slide motor wires. ■

NO – Replace the slide motor (see page 20-103). ■

Protected by AR

DTC B1826: Front Up-down Motor Pulse Error

NOTE: If you are troubleshooting multiple DTCs, be sure to follow the instructions in B-CAN system diagnosis test mode A (see page 22-108).

1. Clear the DTC with the HDS.
2. Turn the ignition switch OFF, and then back ON (II).
3. Move the front of the power seat up and down with the power seat adjustment switch for more than 2 seconds in each direction.

   Does the motor run continuously for more than 2 seconds?

   YES – Intermittent failure, the system is OK at this time. Check for a poor connection at the sensor and at the power seat control unit connector A (20P). ■

   NO – Go to step 4.
4. Move the power seat up and down with the power seat adjustment switch again.

   Does the motor run for about 1 second?

   YES – Go to step 5.

   NO – Go to step 16.
5. Turn the ignition switch OFF.
6. Remove the driver's power seat (see page 20-99).
7. Disconnect the power seat control unit connector A (20P), slide position sensor connector (3P), and front up-down motor/position sensor connector (5P).
8. Check for continuity between the front up-down motor/position sensor connector (5P) No. 5 terminal and power seat control unit connector A (20P) No. 12 terminal.

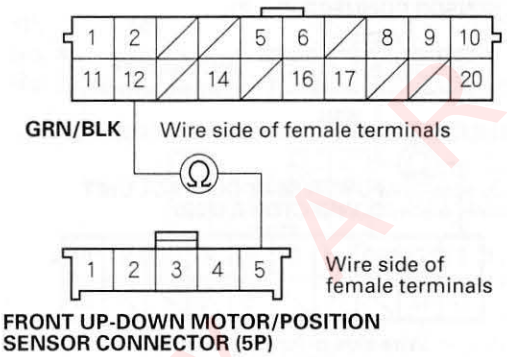

   Is there continuity?

   YES – Go to step 9.

   NO – Repair open in the GRN/BLK wire. ■
9. Check for continuity between the front up-down motor/position sensor connector (5P) No. 5 terminal and body ground.

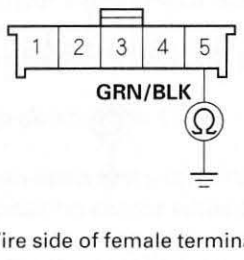

   Is there continuity?

   YES – Repair a short in the GRN/BLK wire. ■

   NO – Go to step 10.

(cont'd)

Protected by A.R.

DTC Troubleshooting (cont'd)

10. Check for continuity between the front up-down motor/position sensor connector (5P) No. 3 terminal and power seat control unit connector A (20P) No. 1 terminal.

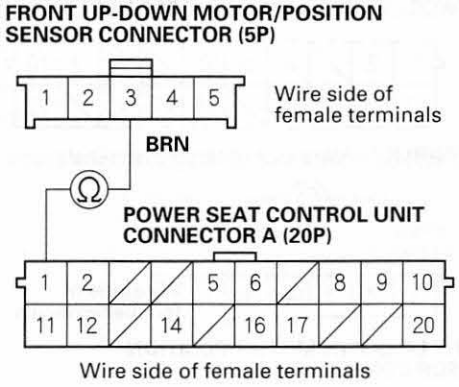

Is there continuity?

YES – Go to step 11.

NO – Repair open in the BRN wire. ■

11. Check for continuity between the front up-down motor/position sensor connector (5P) No. 3 terminal and body ground.

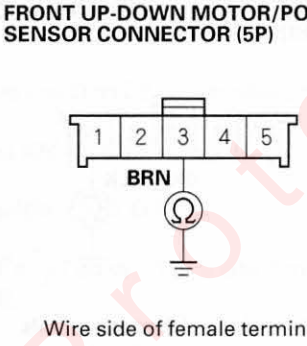

Is there continuity?

YES – Repair a short in the BRN wire. ■

NO – Go to step 12.

12. Check for continuity between the front up-down motor/position sensor connector (5P) No. 4 terminal and power seat control unit connector A (20P) No. 11 terminal.

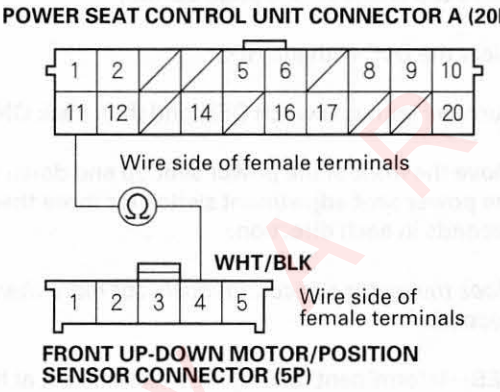

Is there continuity?

YES – Go to step 13.

NO – Repair open in the WHT/BLK wire. ■

13. Reconnect the power seat control unit connector A (20P).

14. Turn the ignition switch ON (II).

15. Measure voltage between the power seat control unit connector A (20P) No. 1 and No. 11 terminals.

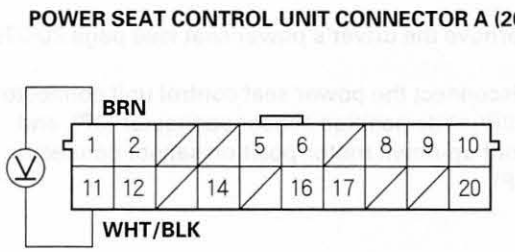

Is there about 5 V?

YES – Replace the front up-down motor/position sensor. ■

NO – Replace the power seat control unit. ■

Protected by AR

16. Turn the ignition switch OFF.

17. Check the No. 14 (20A) fuse in the under-dash fuse/relay box.

Is the fuse OK?
YES – Go to step 18.
NO – Replace the fuse and retest. If the fuse blows again, repair the short in the wire. ■

18. Disconnect the power seat control unit connector B (8P).

19. Measure the voltage between the No. 3 terminal of power seat control unit connector B (8P) and body ground.

POWER SEAT CONTROL UNIT CONNECTOR B (8P)

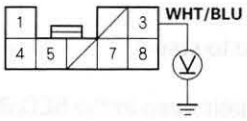

Wire side of female terminals

Is there battery voltage?
YES – Go to step 20.
NO – Repair an open in the wire between the under-dash fuse/relay box and the power seat control unit. ■

20. Check for continuity between the No. 7 terminal of power seat control unit connector B (8P) and body ground.

POWER SEAT CONTROL UNIT CONNECTOR B (8P)

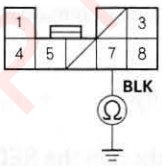

Wire side of female terminals

Is there continuity?
YES – Go to step 21.
NO – Repair an open in the wire between the power seat control unit and G503, G601. If the wire is OK, repair G503, G601. ■

21. Disconnect the front up-down motor connector (5P).

22. Check for continuity between the following terminals of the power seat control unit connector B (8P) and the front up-down motor connector (5P).

8P:	5P:
No. 4	No. 1
No. 8	No. 2

POWER SEAT CONTROL UNIT CONNECTOR B (8P)

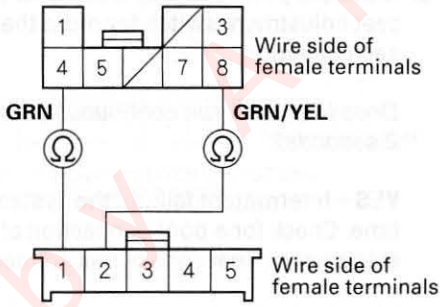

FRONT UP-DOWN MOTOR/POSITION SENSOR CONNECTOR (5P)

Is there continuity?

YES – Go to step 23.

NO – Repair an open in the wire between the power seat control unit connector B (8P) and the front up-down motor connector (5P). ■

23. Remove the driver's power seat (see page 20-99).

24. Test the front up-down motor (see page 22-384).

Is the front up-down motor OK?

YES – Repair an open or a short in the front up-down motor/position sensor wires. ■

NO – Replace the front up-down motor/position sensor (see page 20-103). ■

Protected by FAR

DTC Troubleshooting (cont'd)

DTC B1827: Rear Up-down Motor Pulse Error

NOTE: If you are troubleshooting multiple DTCs, be sure to follow the instructions in B-CAN system diagnosis test mode A (see page 22-108).

1. Clear the DTC with the HDS.
2. Turn the ignition switch OFF, and then back ON (II).
3. Move the power seat up and down with the power seat adjustment switch for more than 2 seconds in each direction.

   Does the motor run continuously for more than 2 seconds?

   YES – Intermittent failure, the system is OK at this time. Check for a poor connection at the sensor and at the power seat control unit connector A (20P). ■

   NO – Go to step 4.
4. Move the power seat up and down with the power seat adjustment switch again.

   Does the motor run for about 1 second?

   YES – Go to step 5.

   NO – Go to step 16.
5. Turn the ignition switch OFF.
6. Remove the driver's power seat (see page 20-99).
7. Disconnect the power seat control unit connector C (12P), recline motor/position sensor connector (5P), and rear up-down motor/position sensor connector (5P).
8. Check for continuity between the rear up-down motor/position sensor connector (5P) No. 5 terminal and power seat control unit connector C (12P) No. 11 terminal.

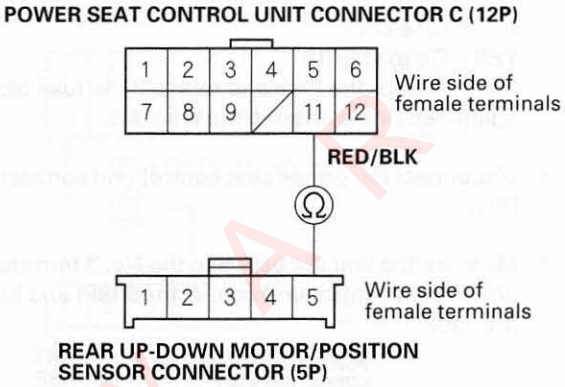

   Is there continuity?

   YES – Go to step 9.

   NO – Repair open in the RED/BLK wire. ■
9. Check for continuity between the rear up-down motor/position sensor connector (5P) No. 5 terminal and body ground.

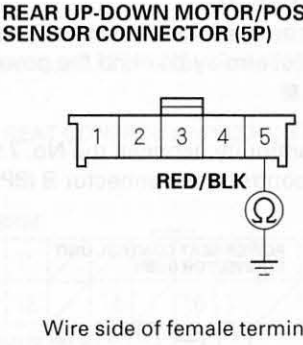

   Is there continuity?

   YES – Repair a short in the RED/BLK wire. ■

   NO – Go to step 10.

Protected by AR

10. Check for continuity between the rear up-down motor/position sensor connector (5P) No. 3 terminal and power seat control unit connector C (12P) No. 6 terminal.

REAR UP-DOWN MOTOR/POSITION SENSOR CONNECTOR (5P)

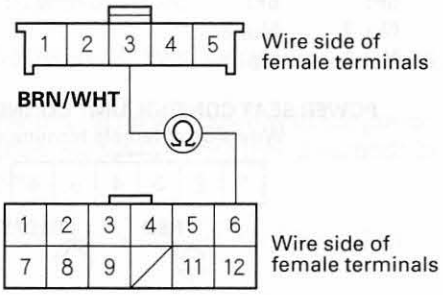

POWER SEAT CONTROL UNIT CONNECTOR C (12P)

Is there continuity?

YES – Go to step 11.

NO – Repair open in the BRN/WHT wire. ■

11. Check for continuity between the rear up-down motor/position sensor connector (5P) No. 3 terminal and body ground.

REAR UP-DOWN MOTOR/POSITION SENSOR CONNECTOR (5P)

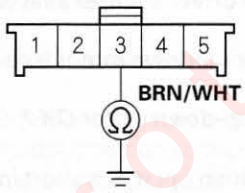

Is there continuity?

YES – Repair a short in the BRN/WHT wire. ■

NO – Go to step 12.

12. Check for continuity between the rear up-down motor/position sensor connector (5P) No. 4 terminal and power seat control unit connector C (12P) No. 12 terminal.

POWER SEAT CONTROL UNIT CONNECTOR C (12P)

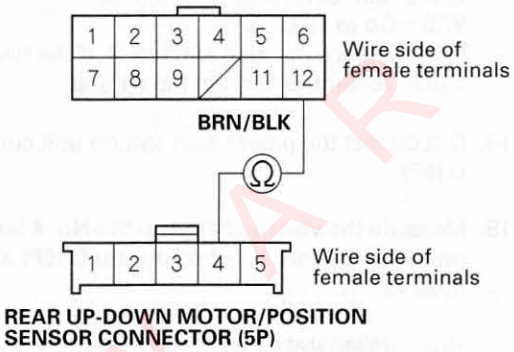

REAR UP-DOWN MOTOR/POSITION SENSOR CONNECTOR (5P)

Is there continuity?

YES – Go to step 13.

NO – Repair open in the BRN/BLK wire. ■

13. Reconnect the power seat control unit connector C (12P).

14. Turn the ignition switch ON (II).

15. Measure voltage between the power seat control unit connector C (12P) No. 6 and No. 12 terminals.

POWER SEAT CONTROL UNIT CONNECTOR C (12P)

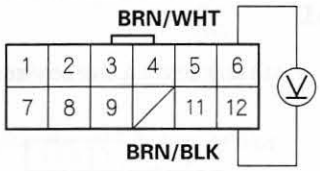

Wire side of female terminals

Is there about 5 V?

YES – Replace the rear up-down motor/position sensor. ■

NO – Replace the power seat control unit. ■

(cont'd)

Protected by AR

DTC Troubleshooting (cont'd)

16. Turn the ignition switch OFF.

17. Check the No. 16 (20A) fuse in the under-dash fuse/relay box.

    Is the fuse OK?
    YES – Go to step 18.
    NO – Replace the fuse and retest. If the fuse blows again, repair the short in the wire. ■

18. Disconnect the power seat control unit connector D (6P).

19. Measure the voltage between the No. 4 terminal of power seat control unit connector D (6P) and body ground.

POWER SEAT CONTROL UNIT CONNECTOR D (6P)

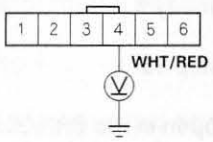

Wire side of female terminals

Is there battery voltage?
YES – Go to step 20.
NO – Repair an open in the wire between the under-dash fuse/relay box and the power seat control unit. ■

20. Check for continuity between the No. 1 terminal of power seat control unit connector D (6P) and body ground.

POWER SEAT CONTROL UNIT CONNECTOR D (6P)

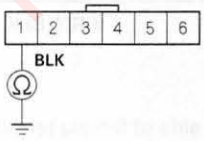

Wire side of female terminals

Is there continuity?
YES – Go to step 21.
NO – Repair an open in the wire between the power seat control unit and G503, G601. If the wire is OK, repair G503, G601. ■

21. Disconnect the rear up-down motor connector (5P).

22. Check for continuity between the following terminals of the power seat control unit connector D (6P) and the rear up-down motor connector (5P).

6P:	5P:
No. 2	No. 2
No. 5	No. 1

POWER SEAT CONTROL UNIT CONNECTOR D (6P)
Wire side of female terminals

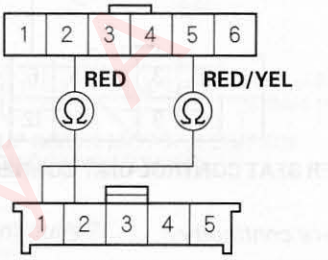

REAR UP-DOWN MOTOR/POSITION SENSOR CONNECTOR (5P)
Wire side of female terminals

Is there continuity?

YES – Go to step 23.

NO – Repair an open in the wire between the power seat control unit connector D (6P) and the rear up-down motor connector (5P). ■

23. Remove the driver's power seat (see page 20-99).

24. Test the rear up-down motor (see page 22-384).

    Is the rear up-down motor OK?

    YES – Repair an open or a short in the rear up-down motor/position sensor wires. ■

    NO – Replace the rear up-down motor/position sensor (see page 20-103). ■

Protected by KAR

DTC B1828: Recline Motor Pulse Error

NOTE: If you are troubleshooting multiple DTCs, be sure to follow the instructions in B-CAN system diagnosis test mode A (see page 22-108).

1. Clear the DTC with the HDS.
2. Turn the ignition switch OFF, and then back ON (II).
3. Move the power seat up and down with the power seat adjustment switch for more than 2 seconds in each direction.

   Does the motor run continuously for more than 2 seconds?

   YES – Intermittent failure, the system is OK at this time. Check for a poor connection at the sensor and at the power seat control unit connector A (20P). ■

   NO – Go to step 4.

4. Recline the power seat forward and backward with the power seat adjustment switch again.

   Does the motor run for about 1 second?

   YES – Go to step 5.

   NO – Go to step 16.

5. Turn the ignition switch OFF.
6. Remove the driver's power seat (see page 20-99).
7. Disconnect the power seat control unit connector C (12P), recline motor/position sensor connector (5P), and rear up-down motor/position sensor connector (5P).
8. Check for continuity between the recline motor/position sensor connector (5P) No. 5 terminal and power seat control unit connector C (12P) No. 5 terminal.

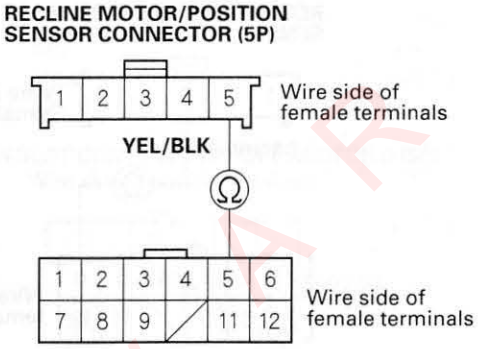

Is there continuity?

YES – Go to step 9.

NO – Repair open in the YEL/BLK wire. ■

9. Check for continuity between the recline motor/position sensor connector (5P) No. 5 terminal and body ground.

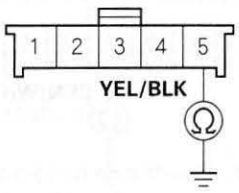

Is there continuity?

YES – Repair a short in the YEL/BLK wire. ■

NO – Go to step 10.

(cont'd)

Protected by A K

DTC Troubleshooting (cont'd)

10. Check for continuity between the recline motor/position sensor connector (5P) No. 3 terminal and power seat control unit connector C (12P) No. 6 terminal.

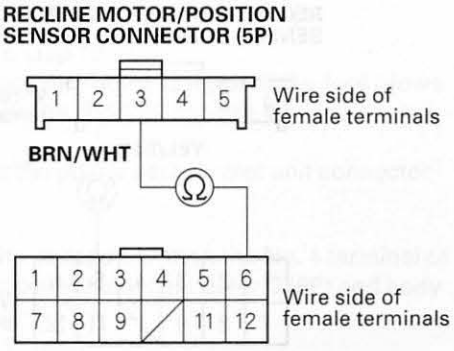

Is there continuity?

YES – Go to step 11.

NO – Repair open in the BRN/WHT wire. ■

11. Check for continuity between the recline motor/position sensor connector (5P) No. 3 terminal and body ground.

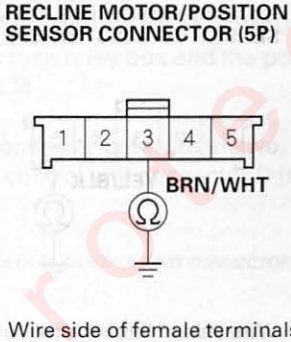

Is there continuity?

YES – Repair a short in the BRN/WHT wire. ■

NO – Go to step 12.

12. Check for continuity between the recline motor/position sensor connector (5P) No. 4 terminal and power seat control unit connector C (12P) No. 12 terminal.

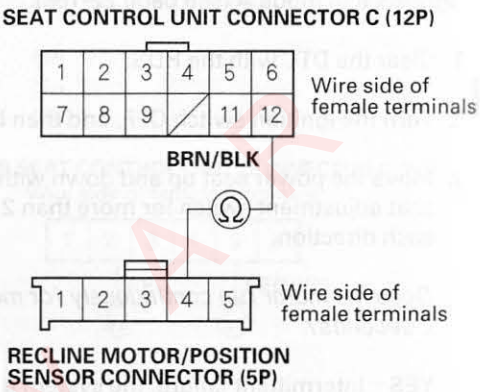

Is there continuity?

YES – Go to step 13.

NO – Repair open in the BRN/BLK wire. ■

13. Reconnect the power seat control unit connector C (12P).

14. Turn the ignition switch ON (II).

15. Measure voltage between the power seat control unit connector C (12P) No. 6 and No. 12 terminals.

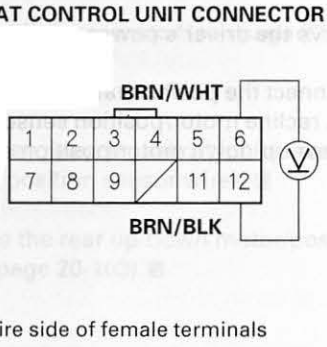

Is there about 5 V?

YES – Replace the recline motor/position sensor. ■

NO – Replace the power seat control unit. ■

Protected by MK

16. Turn the ignition switch OFF.

17. Check the No. 16 (20A) fuse in the under-dash fuse/relay box.

Is the fuse OK?
YES – Go to step 18.
NO – Replace the fuse and retest. If the fuse blows again, repair the short in the wire. ■

18. Disconnect the power seat control unit connector D (6P).

19. Measure the voltage between the No. 4 terminal of power seat control unit connector D (6P) and body ground.

POWER SEAT CONTROL UNIT CONNECTOR D (6P)

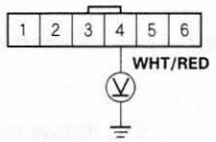

Wire side of female terminals

Is there battery voltage?
YES – Go to step 20.
NO – Repair an open in the wire between the under-dash fuse/relay box and the power seat control unit. ■

20. Check for continuity between the No. 1 terminal of power seat control unit connector D (6P) and body ground.

POWER SEAT CONTROL UNIT CONNECTOR D (6P)

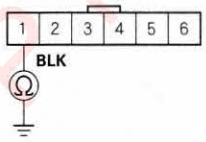

Wire side of female terminals

Is there continuity?
YES – Go to step 21.
NO – Repair an open in the wire between the power seat control unit and G503, G601. If the wire is OK, repair G503, G601. ■

21. Disconnect the recline motor connector (5P).

22. Check for continuity between the following terminals of the power seat control unit connector D (6P) and the recline motor connector (5P).

6P:	5P:
No. 3	No. 1
No. 6	No. 2

POWER SEAT CONTROL UNIT CONNECTOR D (6P)
Wire side of female terminals

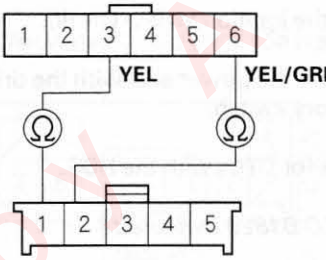

RECLINE MOTOR CONNECTOR (5P)
Wire side of female terminals

Is there continuity?

YES – Go to step 23.

NO – Repair an open in the wire between the power seat control unit connector D (6P) and the recline motor connector (5P). ■

23. Remove the driver's power seat (see page 20-99).

24. Test the recline motor (see page 22-384).

Is the recline motor OK?

YES – Repair an open or a short in the recline motor /position sensor wires. ■

NO – Replace the recline motor/position sensor (see page 20-103). ■

Protected by AR

DTC Troubleshooting (cont'd)

DTC B1829: A/T P Signal and VSS Signal Mismatch

NOTE: If you are troubleshooting multiple DTCs, be sure to follow the instructions in B-CAN system diagnosis test mode A (see page 22-108).

1. Turn the ignition switch OFF.
2. Remove the No. 6 (7.5A) fuse from the under-dash fuse/relay box, then reinstall the fuse.
3. Turn the ignition switch ON (II).
4. Operate the power seat with the driving position memory switch.
5. Check for DTCs with the HDS.

   Is DTC B1829 indicated?

   YES – Go to step 6.

   NO – Intermittent failure, the system is OK at this time.

6. Check for power seat/power mirror DTCs with the HDS.

   Are there any DTCs?

   YES – Go to indicated DTC's troubleshooting. ■

   NO – Go to step 7.

7. Check for ECM/PCM DTCs (see page 11-3).

   Is any DTC indicated?

   YES – Go to ECM/PCM indicated DTC's troubleshooting. ■

   NO – Substitute a known-good power seat control unit and reset. If the symptom DTC is still preset; replace the gauge control module. ■

Protected by AR

DTC B1830: Right Mirror Horizontal Sensor Malfunction

NOTE: If you are troubleshooting multiple DTCs, be sure to follow the instructions in B-CAN system diagnosis test mode A (see page 22-108).

1. Clear the DTC with the HDS.
2. Turn the ignition switch OFF, and then back ON (II).
3. Operate the right power mirror swings right or left with the power mirror switch.
4. Check for DTCs with the HDS.

   Is DTC B1830 indicated?

   YES – Go to step 5.

   NO – Intermittent failure, the system is OK at this time. ■
5. Turn the ignition switch OFF.
6. Remove the driver's dashboard lower cover (see page 20-82).
7. Remove the driver's and front passenger's door panels (see page 20-7).
8. Disconnect the power mirror control unit 26P connector.
9. Disconnect the left and right power mirror 13P connectors.
10. Check for continuity between the right power mirror connector (13P) No. 9 terminal and body ground.

RIGHT POWER MIRROR CONNECTOR (13P)

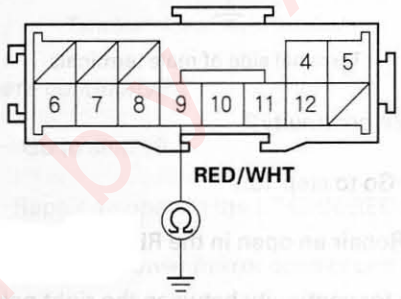

Terminal side of male terminals

Is there continuity?

YES – Repair a short in the RED/WHT wire. ■

NO – Go to step 11.

11. Connect the power mirror control unit connector (26P) No. 8 terminal to body ground with a jumper wire.

POWER MIRROR CONTROL UNIT CONNECTOR (26P)

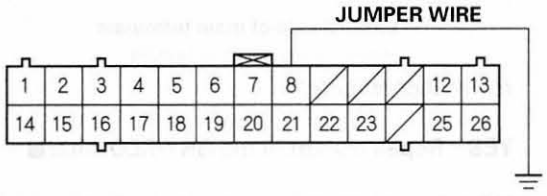

Wire side of female terminals

(cont'd)

Protected by AR

DTC Troubleshooting (cont'd)

12. Check for continuity between the right power mirror connector (13P) No. 9 terminal and body ground.

RIGHT POWER MIRROR CONNECTOR (13P)

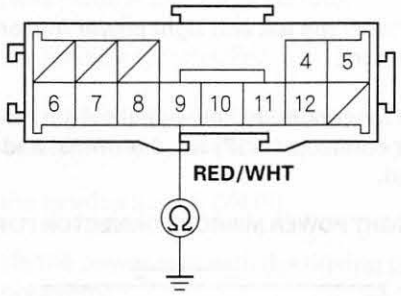

Terminal side of male terminals

Is there continuity?

YES – Go to step 13.

NO – Repair an open in the RED/WHT wire. ■

13. Check for continuity between the right power mirror connector (13P) No. 7 terminal and body ground.

RIGHT POWER MIRROR CONNECTOR (13P)

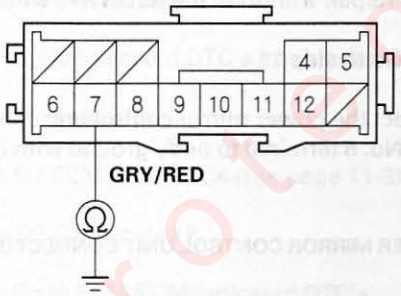

Terminal side of male terminals

Is there continuity?

YES – Repair a short in the GRY/RED wire. ■

NO – Go to step 14.

14. Connect the power mirror control unit connector (26P) No. 18 terminal to body ground with a jumper wire.

POWER MIRROR CONTROL UNIT CONNECTOR (26P)

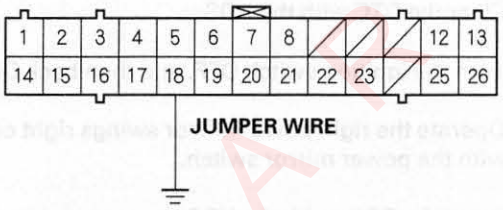

Wire side of female terminals

15. Check for continuity between the right power mirror connector (13P) No. 7 terminal and body ground.

RIGHT POWER MIRROR CONNECTOR (13P)

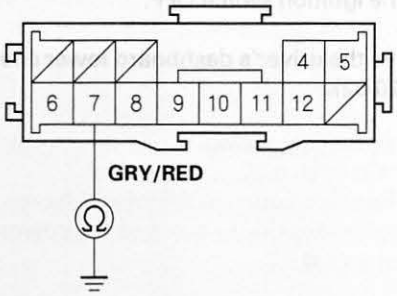

Terminal side of male terminals

Is there continuity?

YES – Go to step 16.

NO – Repair an open in the GRY/RED wire. ■

Protected by A.R.

16. Check for continuity between the power mirror control unit connector (26P) No. 7 terminal and body ground.

POWER MIRROR CONTROL UNIT CONNECTOR (26P)

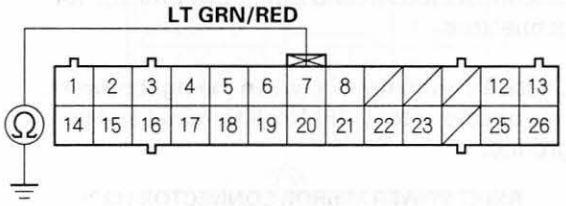

Wire side of female terminals

Is there continuity?

YES – Repair a short in the LT GRN/RED wire. ■

NO – Go to step 17.

17. Connect the power mirror control unit connector (26P) No. 7 terminal to body ground with a jumper wire.

POWER MIRROR CONTROL UNIT CONNECTOR (26P)

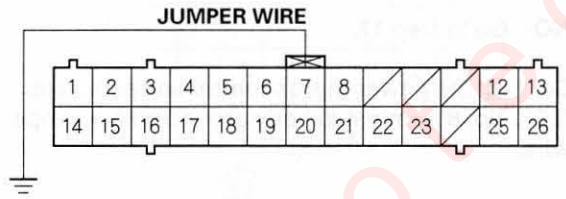

Wire side of female terminals

18. Check for continuity between the right power mirror connector (13P) No. 6 terminal and body ground.

RIGHT POWER MIRROR CONNECTOR (13P)

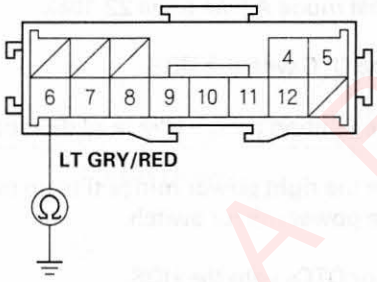

Terminal side of male terminals

Is there continuity?

YES – Go to step 19.

NO – Repair an open in the LT GRN/RED wire. ■

19. Reconnect the power mirror control unit connector (26P).

20. Turn the ignition switch ON (II).

21. Measure voltage between the power mirror control unit connector (26P) No. 8 and No. 7 terminals.

POWER MIRROR CONTROL UNIT CONNECTOR (26P)

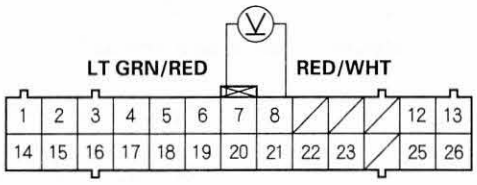

Wire side of female terminals

Is there about 5 V?

YES – Faulty right power mirror position sensor; replace the power mirror actuator (see page 22-309). ■

NO – Substitute a known-good power mirror control unit, and recheck. If DTC is gone, the original power mirror control unit is faulty; replace it. ■

Protected by AR

DTC Troubleshooting (cont'd)

DTC B1831: Right Mirror Vertical Sensor Malfunction

NOTE: If you are troubleshooting multiple DTCs, be sure to follow the instructions in B-CAN system diagnosis test mode A (see page 22-108).

1. Clear the DTC with the HDS.
2. Turn the ignition switch OFF, and then back ON (II).
3. Operate the right power mirror tilts up or down with the power mirror switch.
4. Check for DTCs with the HDS.

   Is DTC B1831 indicated?

   YES – Go to step 5.

   NO – Intermittent failure, the system is OK at this time. ■
5. Turn the ignition switch OFF.
6. Remove the driver's dashboard lower cover (see page 20-82).
7. Remove the driver's and front passenger's door panels (see page 20-7).
8. Disconnect the power mirror control unit 26P connector.
9. Disconnect the left and right power mirror 13P connectors.
10. Check for continuity between the right power mirror connector (13P) No. 9 terminal and body ground.

RIGHT POWER MIRROR CONNECTOR (13P)

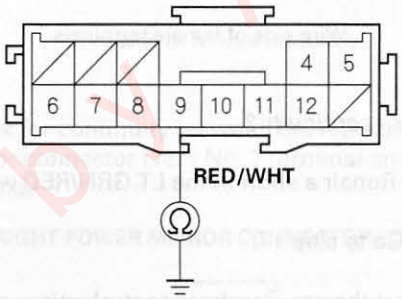

Terminal side of male terminals

Is there continuity?

YES – Repair a short in the RED/WHT wire. ■

NO – Go to step 11.

11. Connect the power mirror control unit connector (26P) No. 8 terminal to body ground with a jumper wire.

POWER MIRROR CONTROL UNIT CONNECTOR (26P)

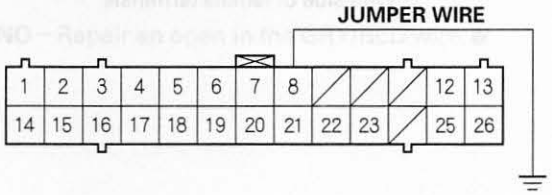

Wire side of female terminals

Protected by AP

12. Check for continuity between the right power mirror connector (13P) No. 9 terminal and body ground.

RIGHT POWER MIRROR CONNECTOR (13P)

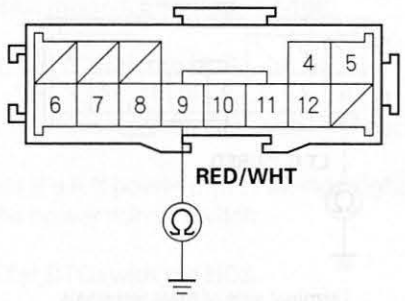

Terminal side of male terminals

Is there continuity?

YES – Go to step 13.

NO – Repair an open in the RED/WHT wire. ■

13. Check for continuity between the right power mirror connector (13P) No. 8 terminal and body ground.

RIGHT POWER MIRROR CONNECTOR (13P)

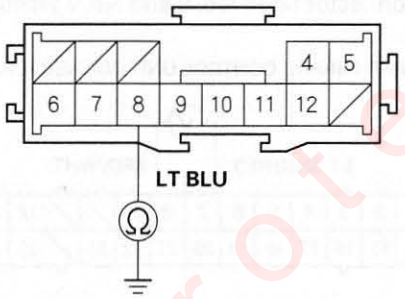

Terminal side of male terminals

Is there continuity?

YES – Repair a short in the LT BLU wire. ■

NO – Go to step 14.

14. Connect the power mirror control unit connector (26P) No. 17 terminal to body ground with a jumper wire.

POWER MIRROR CONTROL UNIT CONNECTOR (26P)

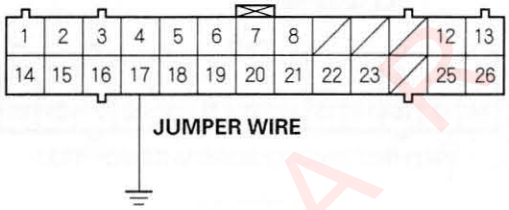

Wire side of female terminals

15. Check for continuity between the right power mirror connector (13P) No. 8 terminal and body ground.

RIGHT POWER MIRROR CONNECTOR (13P)

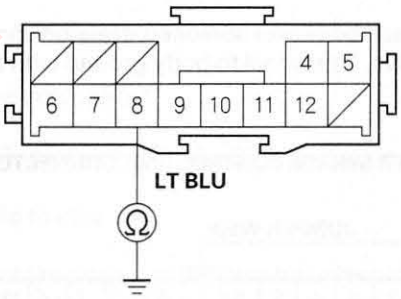

Terminal side of male terminals

Is there continuity?

YES – Go to step 16.

NO – Repair an open in the LT BLU wire. ■

(cont'd)

Protected by AP

DTC Troubleshooting (cont'd)

16. Check for continuity between the power mirror control unit connector (26P) No. 7 terminal and body ground.

POWER MIRROR CONTROL UNIT CONNECTOR (26P)

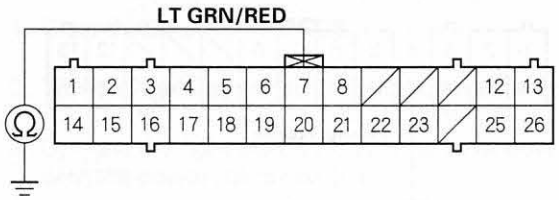

Wire side of female terminals

Is there continuity?

YES – Repair a short in the LT GRN/RED wire. ■

NO – Go to step 17.

17. Connect the power mirror control unit connector (26P) No. 7 terminal to body ground with a jumper wire.

POWER MIRROR CONTROL UNIT CONNECTOR (26P)

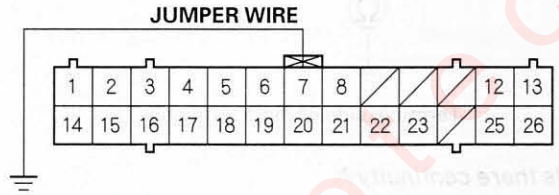

Wire side of female terminals

18. Check for continuity between the right power mirror connector (13P) No. 6 terminal and body ground.

RIGHT POWER MIRROR CONNECTOR (13P)

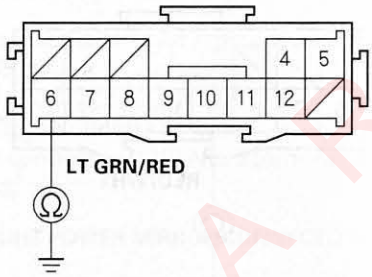

Terminal side of male terminals

Is there continuity?

YES – Go to step 19.

NO – Repair an open in the LT GRN/RED wire. ■

19. Reconnect the power mirror control unit connector (26P).

20. Turn the ignition switch ON (II).

21. Measure voltage between the power mirror control unit connector (26P) No. 8 and No. 7 terminals.

POWER MIRROR CONTROL UNIT CONNECTOR (26P)

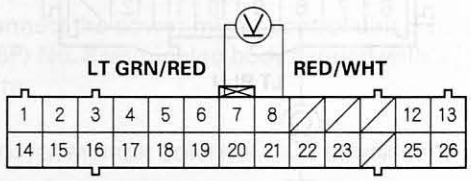

Wire side of female terminals

Is there about 5 V?

YES – Faulty right power mirror position sensor; replace the power mirror actuator (see page 22-309). ■

NO – Substitute a known-good power mirror control unit, and recheck. If DTC is gone, the original power mirror control unit is faulty; replace it. ■

Protected by AK

DTC B1832: Left Mirror Horizontal Sensor Malfunction

NOTE: If you are troubleshooting multiple DTCs, be sure to follow the instructions in B-CAN system diagnosis test mode A (see page 22-108).

1. Clear the DTC with the HDS.
2. Turn the ignition switch OFF, and then back ON (II).
3. Operate the left power mirror swings right or left with the power mirror switch.
4. Check for DTCs with the HDS.

   Is DTC B1832 indicated?

   YES – Go to step 5.

   NO – Intermittent failure, the system is OK at this time. ■
5. Turn the ignition switch OFF.
6. Remove the driver's dashboard lower cover (see page 20-82).
7. Remove the driver's and front passenger's door panels (see page 20-7).
8. Disconnect the power mirror control unit 26P connector.
9. Disconnect the left and right power mirror 13P connectors.
10. Check for continuity between the left power mirror connector (13P) No. 9 terminal and body ground.

LEFT POWER MIRROR CONNECTOR (13P)

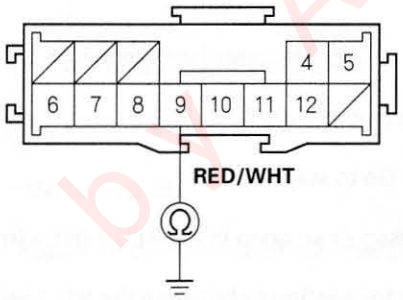

Terminal side of male terminals

Is there continuity?

YES – Repair a short in the RED/WHT wire. ■

NO – Go to step 11.

11. Connect the power mirror control unit connector (26P) No. 8 terminal to body ground with a jumper wire.

POWER MIRROR CONTROL UNIT CONNECTOR (26P)

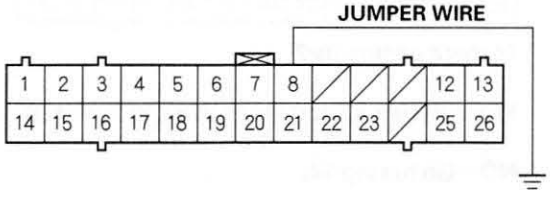

Wire side of female terminals

(cont'd)

Protected by AP

DTC Troubleshooting (cont'd)

12. Check for continuity between the left power mirror connector (13P) No. 9 terminal and body ground.

LEFT POWER MIRROR CONNECTOR (13P)

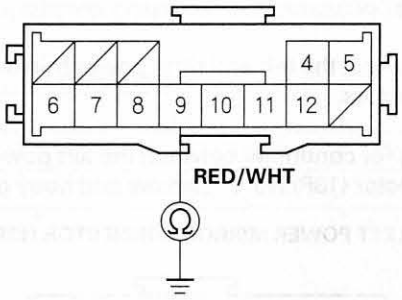

Terminal side of male terminals

Is there continuity?

YES – Go to step 13.

NO – Repair an open in the RED/WHT wire. ■

13. Check for continuity between the left power mirror connector (13P) No. 8 terminal and body ground.

LEFT POWER MIRROR CONNECTOR (13P)

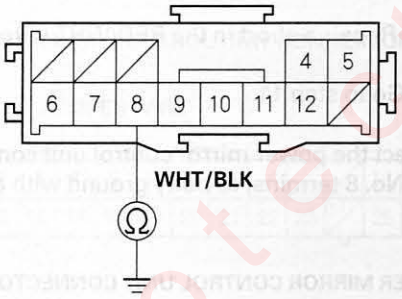

Terminal side of male terminals

Is there continuity?

YES – Repair a short in the WHT/BLK wire. ■

NO – Go to step 14.

14. Connect the power mirror control unit connector (26P) No. 4 terminal to body ground with a jumper wire.

POWER MIRROR CONTROL UNIT CONNECTOR (26P)

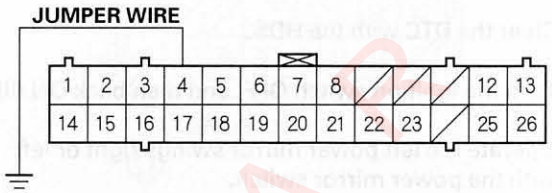

Wire side of female terminals

15. Check for continuity between the left power mirror connector (13P) No. 8 terminal and body ground.

LEFT POWER MIRROR CONNECTOR (13P)

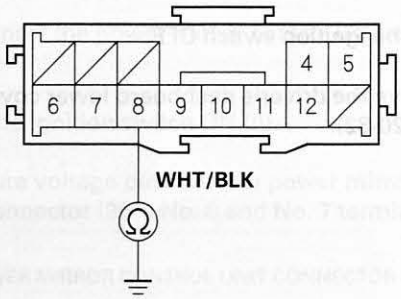

Terminal side of male terminals

Is there continuity?

YES – Go to step 16.

NO – Repair an open in the WHT/BLK wire. ■

Protected by AP

16. Check for continuity between the power mirror control unit connector (26P) No. 7 terminal and body ground.

POWER MIRROR CONTROL UNIT CONNECTOR (26P)

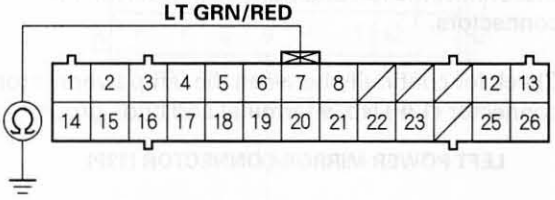

Wire side of female terminals

Is there continuity?

YES – Repair a short in the LT GRN/RED wire. ■

NO – Go to step 17.

17. Connect the power mirror control unit connector (26P) No. 7 terminal to body ground with a jumper wire.

POWER MIRROR CONTROL UNIT CONNECTOR (26P)

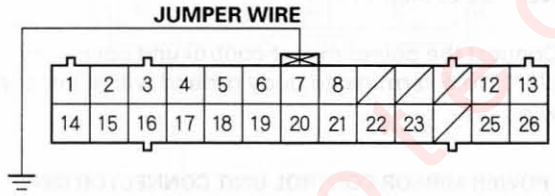

Wire side of female terminals

18. Check for continuity between the left power mirror connector (13P) No. 6 terminal and body ground.

LEFT POWER MIRROR CONNECTOR (13P)

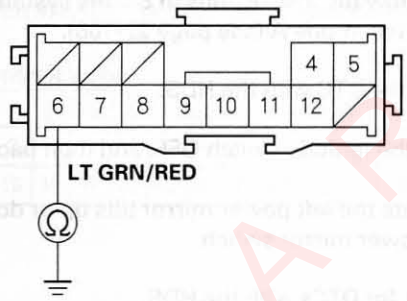

Terminal side of male terminals

Is there continuity?

YES – Go to step 19.

NO – Repair an open in the LT GRN/RED wire. ■

19. Reconnect the power mirror control unit connector (26P).

20. Turn the ignition switch ON (II).

21. Measure voltage between the power mirror control unit connector (26P) No. 8 and No. 7 terminals.

POWER MIRROR CONTROL UNIT CONNECTOR (26P)

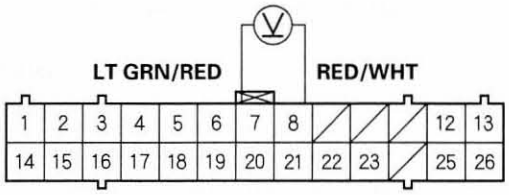

Wire side of female terminals

Is there about 5 V?

YES – Faulty left power mirror position sensor; replace the power mirror actuator (see page 22-309). ■

NO – Substitute a known-good power mirror control unit, and recheck. If DTC is gone, the original power mirror control unit is faulty; replace it. ■

Protected by AR

DTC Troubleshooting (cont'd)

DTC B1833: Left Mirror Vertical Sensor Malfunction

NOTE: If you are troubleshooting multiple DTCs, be sure to follow the instructions in B-CAN system diagnosis test mode A (see page 22-108).

1. Clear the DTC with the HDS.
2. Turn the ignition switch OFF, and then back ON (II).
3. Operate the left power mirror tilts up or down with the power mirror switch.
4. Check for DTCs with the HDS.

   Is DTC B1833 indicated?

   YES – Go to step 5.

   NO – Intermittent failure, the system is OK at this time. ■
5. Turn the ignition switch OFF.
6. Remove the driver's dashboard lower cover (see page 20-82).
7. Remove the driver's and front passenger's door panels (see page 20-7).
8. Disconnect the power mirror control unit 26P connector.
9. Disconnect the left and right power mirror 13P connectors.
10. Check for continuity between the left power mirror connector (13P) No. 9 terminal and body ground.

LEFT POWER MIRROR CONNECTOR (13P)

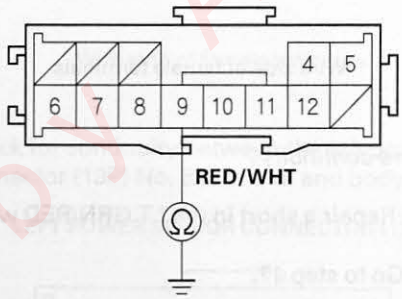

Terminal side of male terminals

Is there continuity?

YES – Repair a short in the RED/WHT wire. ■

NO – Go to step 11.

11. Connect the power mirror control unit connector (26P) No. 8 terminal to body ground with a jumper wire.

POWER MIRROR CONTROL UNIT CONNECTOR (26P)

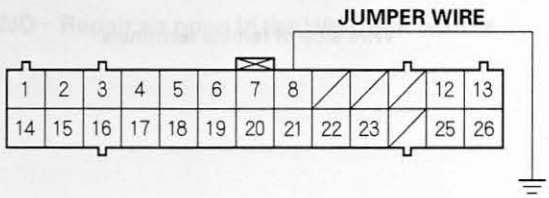

Wire side of female terminals

Protected by AR

12. Check for continuity between the left power mirror connector (13P) No. 9 terminal and body ground.

LEFT POWER MIRROR CONNECTOR (13P)

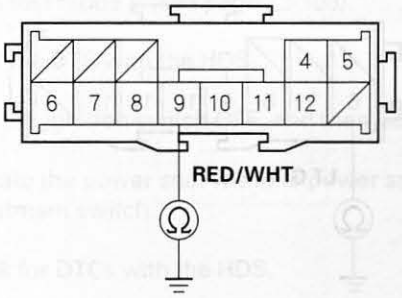

Terminal side of male terminals

Is there continuity?

YES – Go to step 13.

NO – Repair an open in the RED/WHT wire. ■

13. Check for continuity between the left power mirror connector (13P) No. 7 terminal and body ground.

LEFT POWER MIRROR CONNECTOR (13P)

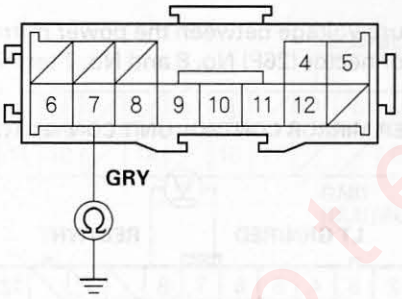

Terminal side of male terminals

Is there continuity?

YES – Repair a short in the GRY wire. ■

NO – Go to step 14.

14. Connect the power mirror control unit connector (26P) No. 5 terminal to body ground with a jumper wire.

POWER MIRROR CONTROL UNIT CONNECTOR (26P)

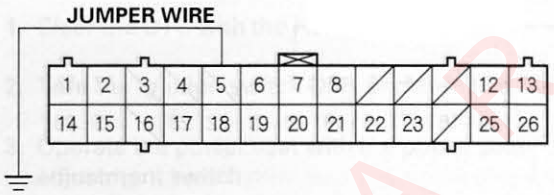

Wire side of female terminals

15. Check for continuity between the left power mirror connector (13P) No. 7 terminal and body ground.

LEFT POWER MIRROR CONNECTOR (13P)

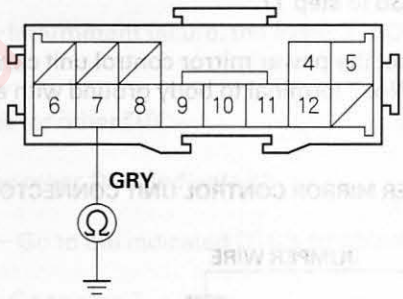

Terminal side of male terminals

Is there continuity?

YES – Go to step 16.

NO – Repair an open in the GRY wire. ■

(cont'd)

Protected by AP

DTC Troubleshooting (cont'd)

16. Check for continuity between the power mirror control unit connector (26P) No. 7 terminal and body ground.

POWER MIRROR CONTROL UNIT CONNECTOR (26P)

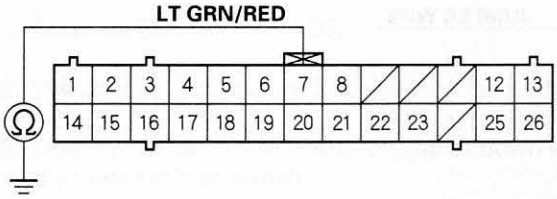

Wire side of female terminals

Is there continuity?

YES – Repair a short in the LT GRN/RED wire. ■

NO – Go to step 17.

17. Connect the power mirror control unit connector (26P) No. 7 terminal to body ground with a jumper wire.

POWER MIRROR CONTROL UNIT CONNECTOR (26P)

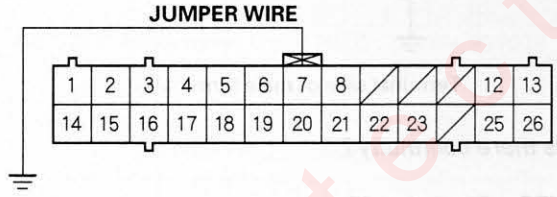

Wire side of female terminals

18. Check for continuity between the left power mirror connector (13P) No. 6 terminal and body ground.

LEFT POWER MIRROR CONNECTOR (13P)

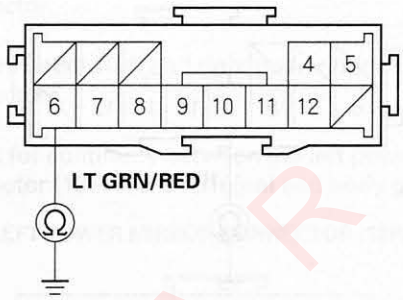

Terminal side of male terminals

Is there continuity?

YES – Go to step 19.

NO – Repair an open in the LT GRN/RED wire. ■

19. Reconnect the power mirror control unit connector (26P).

20. Turn the ignition switch ON (II).

21. Measure voltage between the power mirror control unit connector (26P) No. 8 and No. 7 terminals.

POWER MIRROR CONTROL UNIT CONNECTOR (26P)

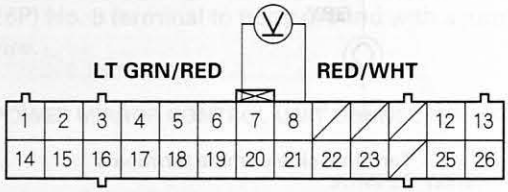

Wire side of female terminals

Is there about 5 V?

YES – Faulty left power mirror position sensor; replace the power mirror actuator (see page 22-309). ■

NO – Substitute a known-good power mirror control unit, and recheck. If DTC is gone, the original power mirror control unit is faulty; replace it. ■

Protected by AR

DTC B1834: M/T Harness Poor Ground

NOTE: If you are troubleshooting multiple DTCs, be sure to follow the instructions in B-CAN system diagnosis test mode A (see page 22-108).

1. Clear the DTC with the HDS.
2. Turn the ignition switch OFF, and then back ON (II).
3. Operate the power seat with the power seat adjustment switch.
4. Check for DTCs with the HDS.

   Is DTC 1834 indicated?

   YES – Go to step 5.

   NO – Intermittent failure, the system is OK at this time. ■
5. Check for voltage between the power seat control unit connector A (20P) No. 8 terminal and body ground.

POWER SEAT CONTROL UNIT CONNECTOR A (20P)

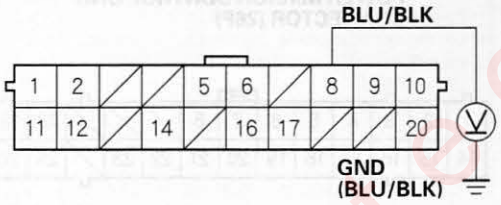

Wire side of female terminals

Is there 1 V or less?

YES – Check for poor connection between the power seat control unit connector A (20P) and G503, G601. If the wire and ground are OK, replace the power seat control unit (see page 22-348). ■

NO – Check for the poor ground (G503, G601) or repair an open in the wire. ■

DTC B1837: Power Seat Position Memory Recall Error

NOTE: If you are troubleshooting multiple DTCs, be sure to follow the instructions in B-CAN system diagnosis test mode A (see page 22-108).

1. Clear the DTC with the HDS.
2. Turn the ignition switch OFF, and then back ON (II).
3. Operate the power seat with the power seat adjustment switch.
4. Operate the power seat with the driving position memory switch.
5. Check for DTCs with the HDS.

   Is DTC 1837 indicated?

   YES – Go to step 6.

   NO – Intermittent failure, the system is OK at this time. ■
6. Check for other DTCs.

   Is any other DTC indicated?

   YES – Go to the indicated DTC's troubleshooting. ■

   NO – Go to step 7.
7. Remove the driver's power seat (see page 20-99).
8. Test the power seat motors (see page 22-384).

   Are the power seat motors OK?

   YES – Replace the power seat control unit. ■

   NO – Replace the faulty power seat motor(s). ■

Protected by AP

DTC Troubleshooting (cont'd)

DTC B1843: Power Seat Control Unit lost communication with other units (UART communication error)

NOTE: If you are troubleshooting multiple DTCs, be sure to follow the instructions in B-CAN system diagnosis test mode A (see page 22-108).

1. Clear the DTC with the HDS.
2. Turn the ignition switch OFF, and then back ON (II).
3. Operate the power seat with the driving position memory switch.
4. Check for DTCs with the HDS.

Is DTC 1843 indicated?

YES – Go to step 5.

NO – Intermittent failure, the system is OK at this time. ■

5. Turn the ignition switch OFF.
6. Disconnect the power seat control unit connectors and power mirror control unit connector.
7. Check for continuity between the power seat control unit 12P connector No. 4 terminal and power mirror control unit 26P connector No. 23 terminal.

POWER SEAT CONTROL UNIT CONNECTOR C (12P)

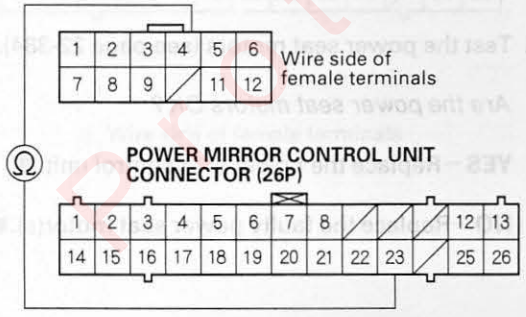

Is there continuity?

YES – Go to step 8.

NO – Repair an open in the PUR wire between the power mirror control unit and the seat control unit. ■

8. Check for continuity between the power seat control unit 12P connector No. 4 terminal and body ground with the ignition switch ON (II).

POWER SEAT CONTROL UNIT CONNECTOR C (12P)

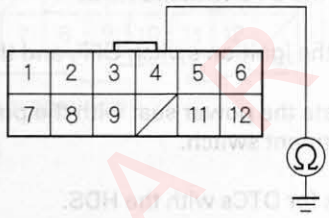

Is there continuity?

YES – Repair a short in the PUR wire to ground. ■

NO – Go to step 9.

9. Measure the voltage between the No. 13 terminal of the power mirror control unit 26P connector and body ground.

POWER MIRROR CONTROL UNIT CONNECTOR (26P)

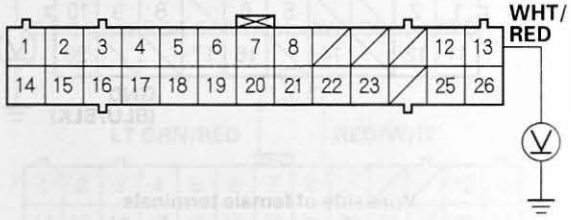

Is there battery voltage?

YES – Go to step 10.

NO – Check No. 7 (7.5A) fuse in the under-dash fuse/relay box. If the fuse is OK, repair an open in the WHT/RED wire. ■

Protected by AR

10. Check for continuity between the No. 25 terminal of power mirror control unit 26P connector and body ground.

POWER MIRROR CONTROL UNIT CONNECTOR (26P)

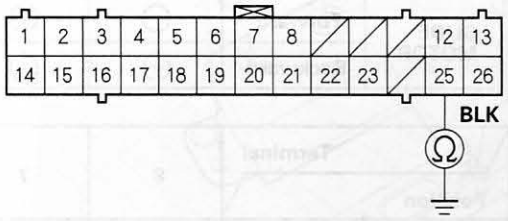

Wire side of female terminals

Is there continuity?

YES — Repair an open in the wire between the power mirror control unit and G501. If the wire is OK, repair G501. ■

NO — Replace the power mirror control unit. ■

Protected by A R

Driver's Power Seat Motor Test

1. Remove the driver's seat (see page 20-99).
2. Disconnect the connector from each power seat motor.

   NOTE: All connectors are terminal side of male terminals.

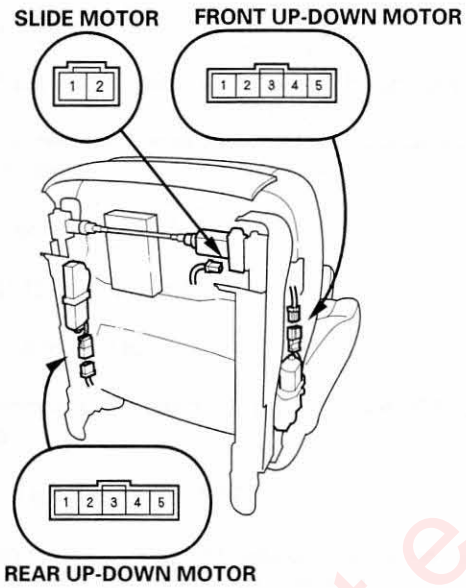

REAR UP-DOWN MOTOR

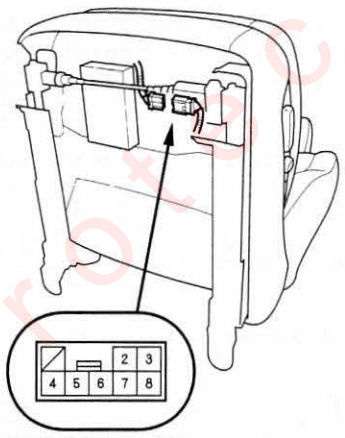

RECLINE MOTOR

3. Test each motor by connecting power and ground according to the table. When the motor stops running, disconnect battery power immediately.

Position \ Terminal		1	2
SLIDE MOTOR	Forward	⊖	⊕
	Backward	⊕	⊖

Position \ Terminal		8	7
RECLINE MOTOR	Forward	⊖	⊕
	Backward	⊕	⊖

Position \ Terminal		1	2
FRONT UP-DOWN MOTOR	UP	⊕	⊖
	DOWN	⊖	⊕

Position \ Terminal		1	2
REAR UP-DOWN MOTOR	UP	⊕	⊖
	DOWN	⊖	⊕

4. If the motor does not run or fails to run smoothly, replace:

   - Slide motor (see page 20-103)
   - Recline motor (see page 20-104)
   - Front up-down motor (see page 20-103)
   - Rear up-down motor (see page 20-103)

Protected by A R

Driving Position Memory Switch Test/Replacement

1. Remove the driver's door panel (see page 20-7).
2. Disconnect the 10P connector from the memory switch (A).

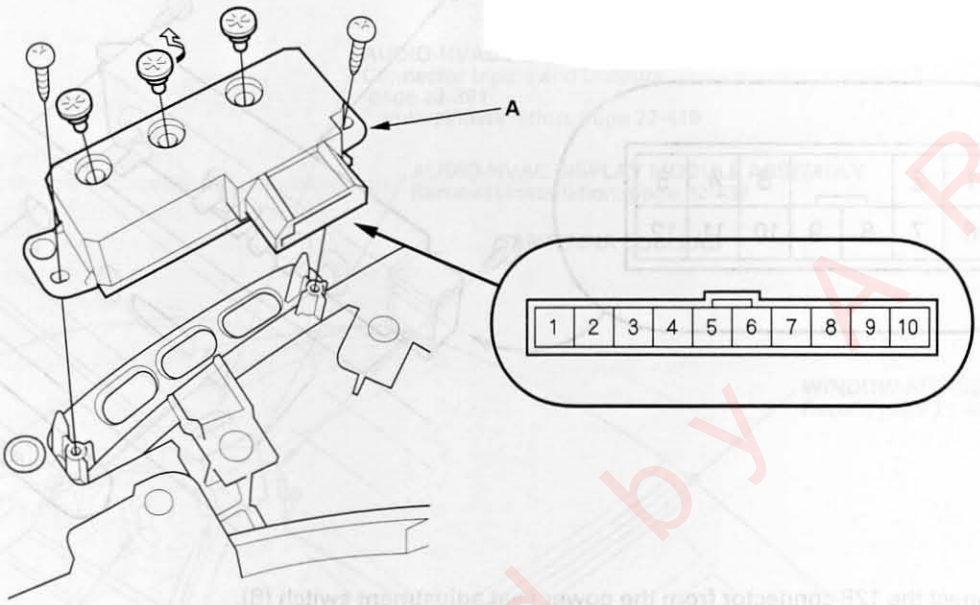

3. Check for continuity between the terminals in each switch position according to the table.

Position \ Terminal		1	2		8	4	5	6	7	3		10
MEMO button	OFF											
	ON					○		○				
Position 1 button	OFF											
	ON							○	○	○	⊘	○
Position 2 button	OFF											
	ON						○		○			
Indicator 1		○		⊠	○							
Indicator 2			○	⊠	○							

4. If the continuity check is not as specified, remove the screws and replace the switch.

Protected by AR

Switch Test/Replacement

1. Remove the power seat adjustment switch knobs (A) and recline cover from the driver's power seat (see page 20-102), then remove the two screws and the power seat switch.

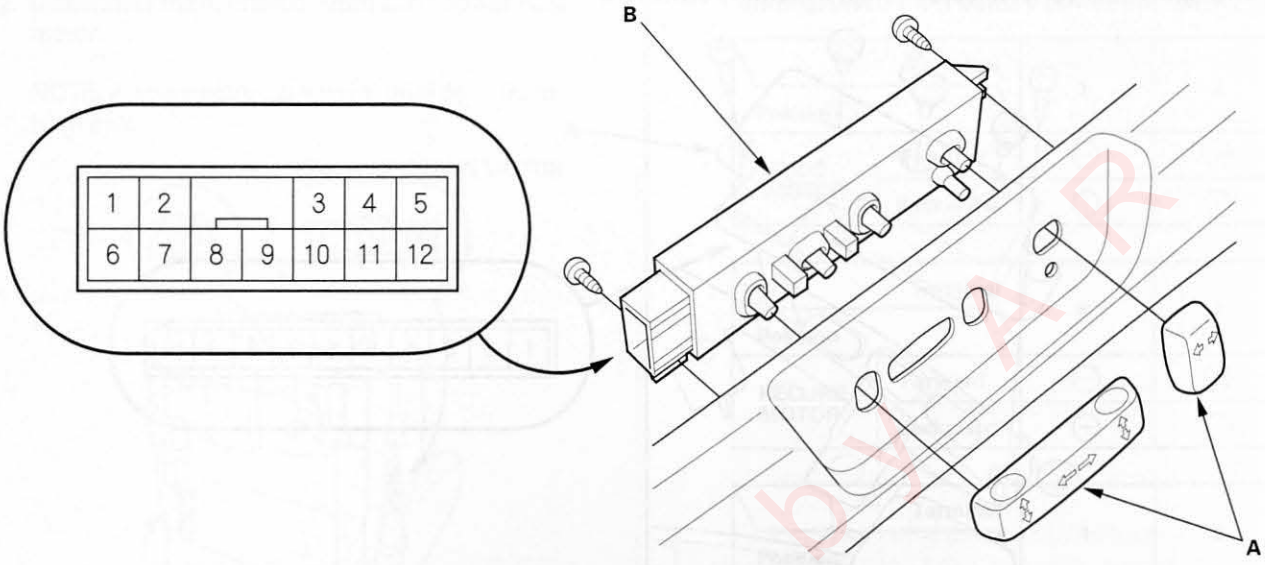

2. Disconnect the 12P connector from the power seat adjustment switch (B).
3. Reinstall the adjustment switch knobs to the switch.
4. Check for continuity between the terminals in each switch position according to the table.

Position \ Terminal		1	2	3	4	5	6	7	8	9	10	11	12
SLIDE SWITCH	Forward							○	○		○	○	
	Backward							○	○		○	○	
RECLINE SWITCH	Forward		○		○		○						○
	Backward		○		○		○						○
FRONT UP-DOWN SWITCH	UP			○					○	○	○		
	DOWN			○					○	○	○		
REAR UP-DOWN SWITCH	UP	○	○		○	○							
	DOWN	○	○		○	○							

5. If the continuity is not as specified, replace the switch.

Protected by A R

Component Location Index

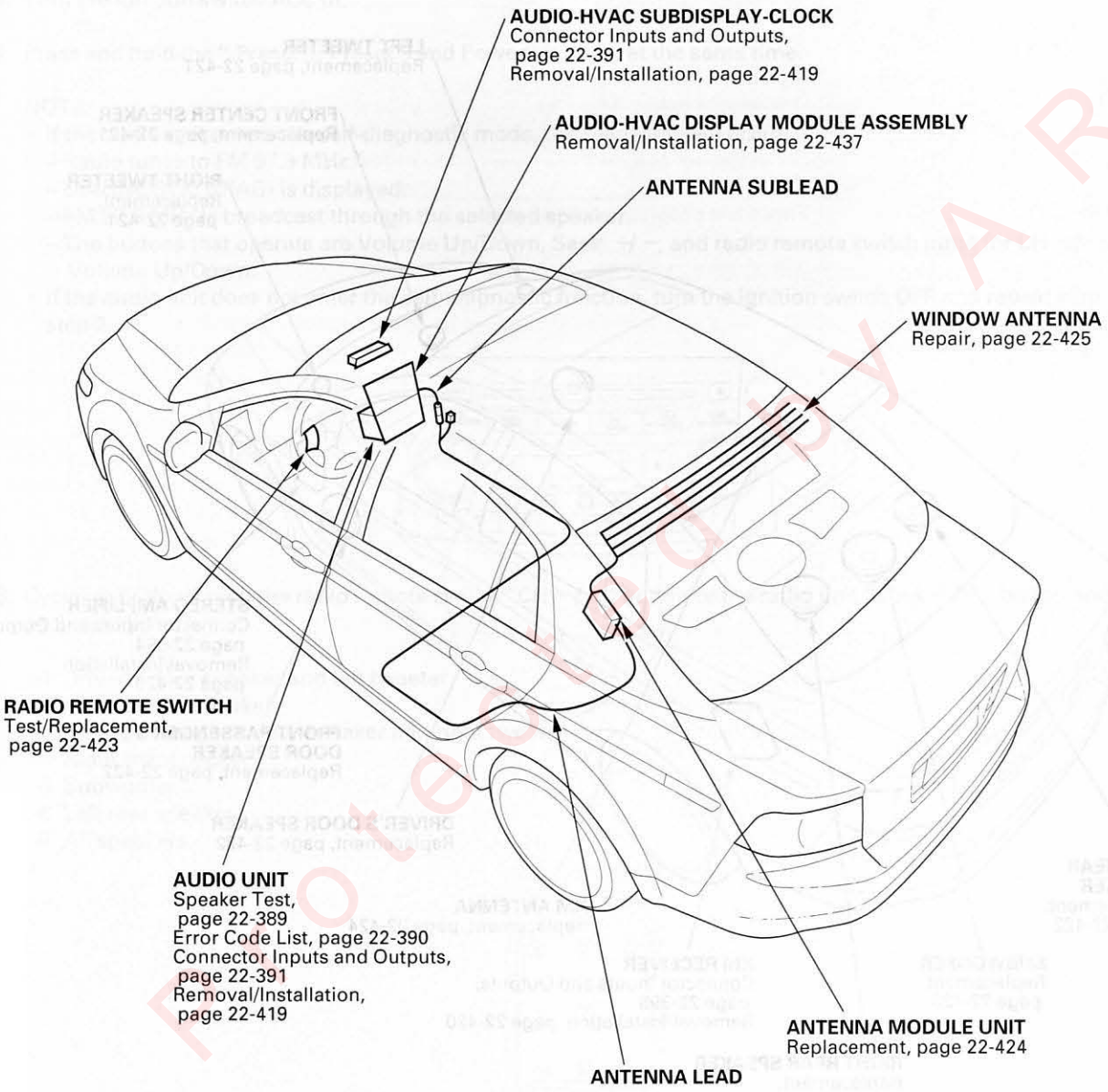

(cont'd)

Component Location Index (cont'd)

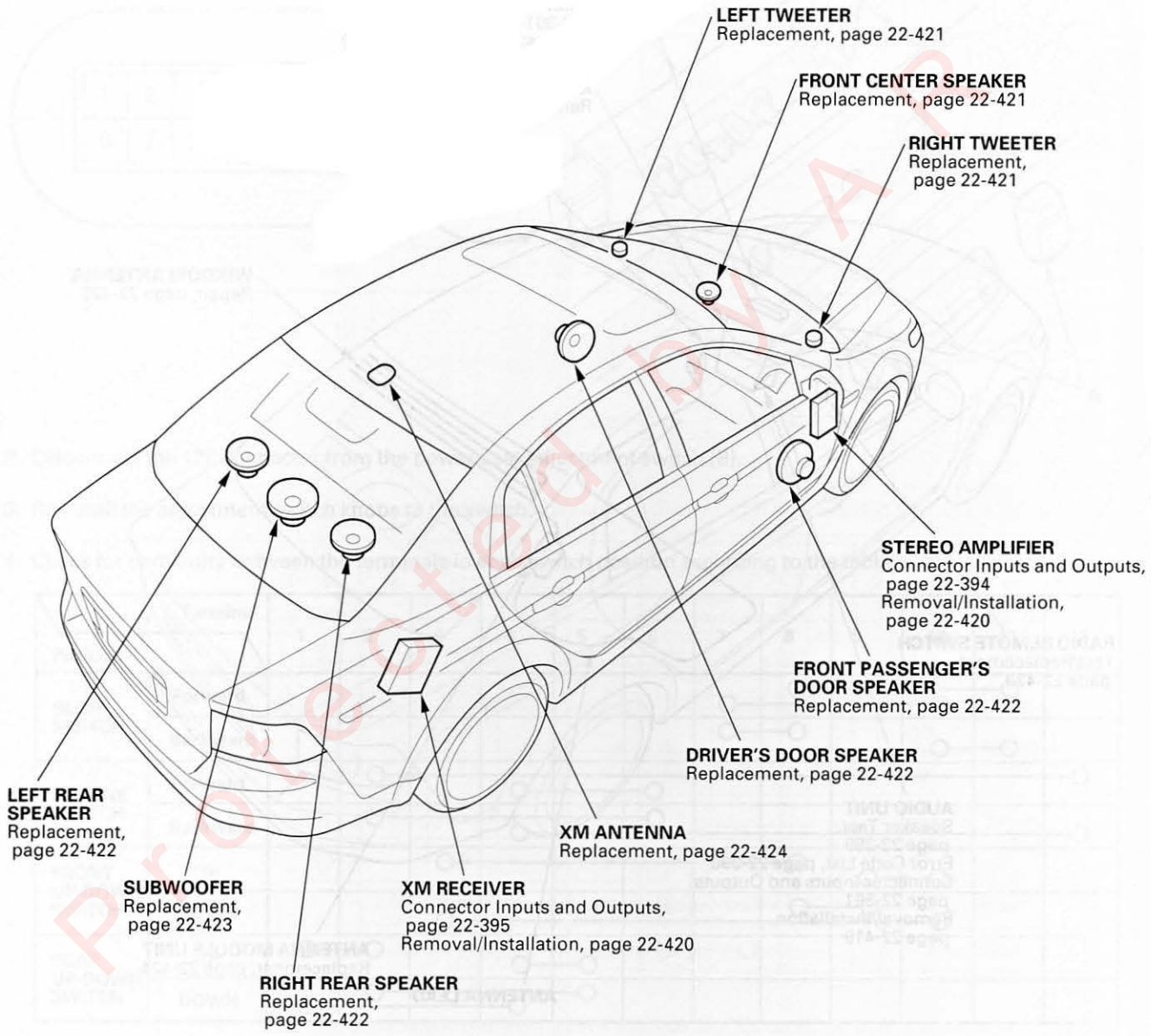

Speaker Test

The audio unit has a speaker self-diagnostic function. To run the self-diagnostic function, do the following:

Entering the Self-diagnostic Function

1. Turn the ignition switch ACC (I).

2. Press and hold the " Preset 1, Preset 3 and Power" buttons at the same time.

   NOTE:
   - If the audio unit enters the self-diagnostic mode, the following will occur.
     - Radio tunes to FM 97.9 MHz
     - DIAGNOSTIC (DIAG) is displayed.
     - FM 97.9 MHz is broadcast through the selected speaker.
     - The buttons that operate are Volume Up/Down, Seek +/ −, and radio remote switch input for CH +/ −and Volume Up/Down.
   - If the audio unit does not enter the self-diagnostic function, turn the ignition switch OFF and repeat step 1 and step 2.

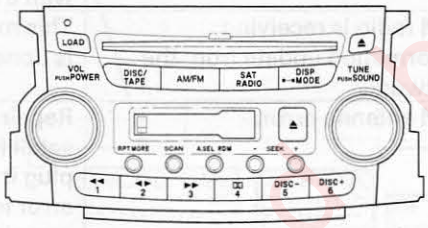

3. Cycle up or down with the radio remote switch "CH +/−" button or the radio unit "Seek +/−" button and check each speaker.

   -1 Driver's door speaker and left tweeter
   -2 Front center speaker
   -3 Front passenger's door speaker and right tweeter
   -4 Right rear speaker
   -5 Subwoofer
   -6 Left rear speaker
   -7 All speakers

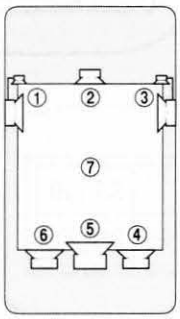

4. If any speaker does not sound, check for an open in the wire between the audio unit and its speaker. If the wire harness is OK, replace its speaker (see page 22-421).

Exiting the Self-diagnostic Function

Turn the ignition switch OFF.

Protected by A R

Error Code List

Error Code Displayed	Possible Cause	Solution
DISC	Cannot read disc.	Eject the disc and try another.
DISC ERROR	There is a porblem with the disc player. A common problem is disc labels coming off the disc in the player.	Try to eject the disc and try another one. If there is still a problem replace the audio unit.
DISC FORMAT	A disc was inserted that has a format that is not recognized.	Eject the disc and try another one.
DISC-H	Disc player is hot. This can happen if the vehicle is parked out in the hot sun all day.	Park the vehicle in a cooler place for awhile and try the disc player again. If still present try another disc. If still present, replace the audio unit.
TAPE ERROR	There is a problem with the tape player.	Try to eject the tape and try another one. If there is still a problem, replace the audio unit.
XM OFF AIR	XM channel not in service.	Try another XM channel.
XM NO SIGNAL	Loss of signal.	Both the terrestrial and satellite antennas have lost signal. Park the vehicle outside with a clear view of the southern horizon.
XM UPDATING	XM radio is receiving information update from the network.	This message will disappear once the update is done.
XM ANTENNA	XM antenna error.	Repair the open or short in the terrestrial or satellite antenna. Remove the antenna and plug it directly into the XM receiver. If the error is gone, replace the antenna harness. If error is still present, replace the antenna.
———	No signal from XM.	XM radio signal is not being transmitted. Contact XM.
ERR 1	Anti-theft code mismatch (1th try).	Enter the correct anti-theft code.
ERRE	Anti-theft code mismatch (10th try).	Remove fuse No. 5 (20A) in the under-dash fuse/relay box, then reinsert it. You will have 10 more tries to enter the correct anti-theft code.

Protected by

System Description

Audio Unit Connector Inputs and Outputs

When replacing an audio unit connector, match the wires to the cavities listed in the following table.

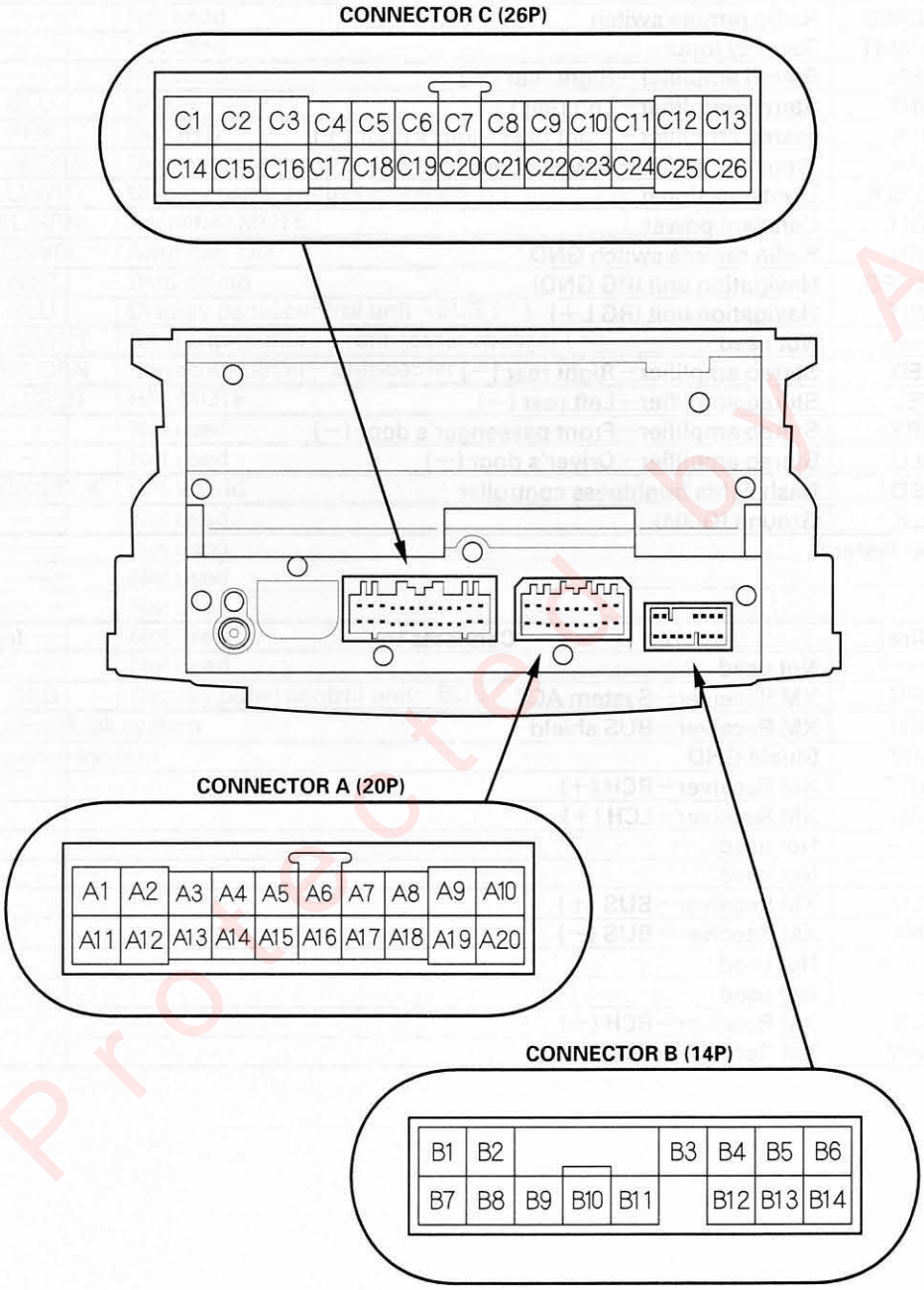

(cont'd)

System Description (cont'd)

Connector A

Cavity	Wire	Connects to	Input/Output
A1	YEL/GRN	Radio switched power	Input
A2	YEL/RED	ACC (Main stereo power supply)	Input
A3	GRN/RED	Radio remote switch	Input
A4	RED/WHT	Security input	Input
A5	ORN	Stereo amplifier—Right rear (+)	Output
A6	WHT	Stereo amplifier—Left rear (+)	Output
A7	BLK	Stereo amplifier—Front passenger's door (+)	Output
A8	GRN	Stereo amplifier—Driver's door (+)	Output
A9	RED/BLK	Lights-on signal	Input
A10	WHT	Constant power	Input
A11	BRN	Radio remote switch GND	———
A12*	BLU/RED	Navigation unit (RG GND)	———
A13*	WHT	Navigation unit (RG L+)	Output
A14	———	Not used	———
A15	RED	Stereo amplifier—Right rear (−)	Input
A16	YEL	Stereo amplifier—Left rear (−)	Input
A17	GRY	Stereo amplifier—Front passenger's door (−)	Input
A18	BLU	Stereo amplifier—Driver's door (−)	Input
A19	RED	Dash lights brightness controller	Input
A20	BLK	Ground (G504)	———

*: With navigation system

Connector B (14P)

Cavity	Wire	Connects to	Input/Output
B1	———	Not used	———
B2	ORN	XM Receiver—System ACC	Output
B3	BRN	XM Receiver—BUS shield	———
B4	GRY	Shield GND	———
B5	WHT	XM Receiver—RCH (+)	Output
B6	RED	XM Receiver—LCH (+)	Output
B7	———	Not used	———
B8	———	Not used	———
B9	BLU	XM Receiver—BUS (+)	Output
B10	PNK	XM Receiver—BUS (−)	Input
B11	———	Not used	———
B12	———	Not used	———
B13	BLK	XM Receiver—RCH (−)	Output
B14	GRN	XM Receiver—LCH (−)	Input

Provided by A R

Connector C (26P)

Cavity	Wire	Connects to	Input/Output
C1	BRN	Stereo amplifier−Front center speaker (+)	Output
C2	RED/BLU	Stereo amplifier−Subwoofer (+)	Output
C3	———	Not used	———
C4	———	Not used	———
C5	———	Not used	———
C6*1	BLU	RG L+	Output
C7*1	PNK	RG GND	———
C8	GRN/ORN	Display panel control unit (IMS 0)	Output
C9	BLU/WHT	Display panel control unit (IMS 1)	Output
C10	YEL/GRN	Amplifier MUTE	Output
C11	RED/YEL	Amplifier ON	Output
C12*2	WHT	BUS shield	———
C13*2	BLU	Display panel control unit−BUS (+)	Output
C14	GRN/WHT	Stereo amplifier−Front center speaker (−)	Input
C15	WHT/GRN	Stereo amplifier−Subwoofer (−)	Input
C16*1	BLU/RED	HFL MUTE	Output
C17	———	Not used	———
C18	———	Not used	———
C19*1	LT GRN/BLK	HFL shield	———
C20	———	Not used	———
C21	———	Not used	———
C22	———	Not used	———
C23	———	Not used	———
C24	———	Not used	———
C25	———	Not used	———
C26	RED	Display panel control unit−BUS (−)	Input

* 1: With HandsFreeLink system
* 2: With Navigation system

(cont'd)

System Description (cont'd)

Stereo Amplifier Connector Inputs and Outputs

When replacing a stereo amplifier connector, match the wires to the cavities listed in the following table.

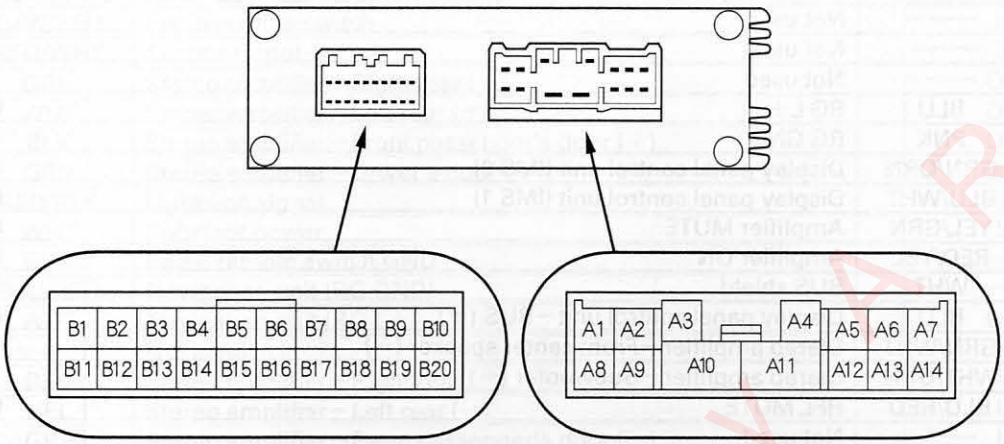

Cavity	Wire	Connects to	Cavity	Wire	Connects to
A1	LT GRN/RED	Subwoofer (−)	A8	BLU/YEL	Front center speaker (−)
A2	YEL/BLK	Subwoofer (+)	A9	GRN/WHT	Front center speaker (+)
A3	RED/YEL	Left rear speaker (−)	A10	BLK	Ground (G504)
A4	BRN/WHT	Left rear speaker (+)	A11	WHT	Constant power
A5	RED/BLU	Right rear speaker (+)	A12	YEL	Right rear speaker (−)
A6	LT GRN	Driver's door speaker (+), Left tweeter (+)	A13	PUR	Driver's door speaker (−), Left tweeter (−)
A7	BLU	Front passenger's door speaker (+), Right tweeter (+)	A14	RED	Front passenger's door speaker (−), Right tweeter (−)

Cavity	Wire	Connects to	Cavity	Wire	Connects to
B1	BLK	Audio unit−Front passenger's door (+)	B11	YEL	Audio unit−Left rear (−)
B2	GRN	Audio unit−Driver's door (+)	B12	———	Not used
B3	ORN	Audio unit−Right rear (+)	B13	———	Not used
B4	WHT	Audio unit−Left rear (+)	B14	WHT/GRN	Audio unit−Subwoofer (−)
B5	RED/BLU	Audio unit−Subwoofer (+)	B15	GRN/WHT	Audio unit−Front center speaker (−)
B6	BRN	Audio unit−Front center speaker (+)	B16	YEL/GRN	Amplifier (MUTE)
B7	RED/YEL	Amplifier ON	B17	———	Not used
B8	GRY	Audio unit−Front passenger's door (−)	B18	———	Not used
B9	BLU	Audio unit−Driver's door (−)	B19	———	Not used
B10	RED	Audio unit−Right rear (−)	B20	———	Not used

Protected by AR

XM Receiver Connector Inputs and Outputs

When replacing an XM receiver connector, match the wires to the cavities listed in the following table.

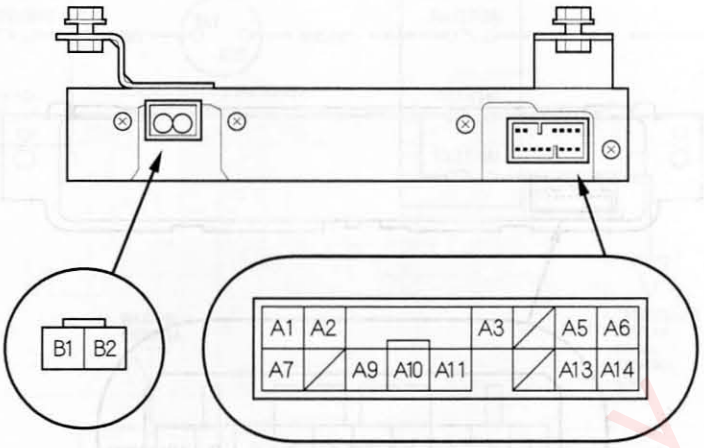

Cavity	Wire	Connects to	Cavity	Wire	Connects to
A1	WHT/RED	Constant power	A8	———	Not used
A2	ORN	Audio unit – System ACC	A9	BLU	Audio unit – BUS (+)
A3	BRN	Audio unit – BUS shield	A10	PNK	Audio unit – BUS (–)
A4	———	Not used	A11	BLK	Ground (G604)
A5	WHT	Audio unit – RCH (+)	A12	———	Not used
A6	RED	Audio unit – LCH (+)	A13	BLK	Audio unit – RCH (–)
A7	WHT/RED	Constant power	A14	GRN	Audio unit – LCH (–)

Cavity	Wire	Connects to
B1	———	Terrestrial signal antenna
B2	———	Satellite signal antenna

(cont'd)

System Description (cont'd)

Audio-HVAC Subdisplay-Clock Connector Inputs and Outputs

When replacing an audio-HVAC subdisplay/clock connector, match the wires to the cavities listed in the following table.

With Navigation

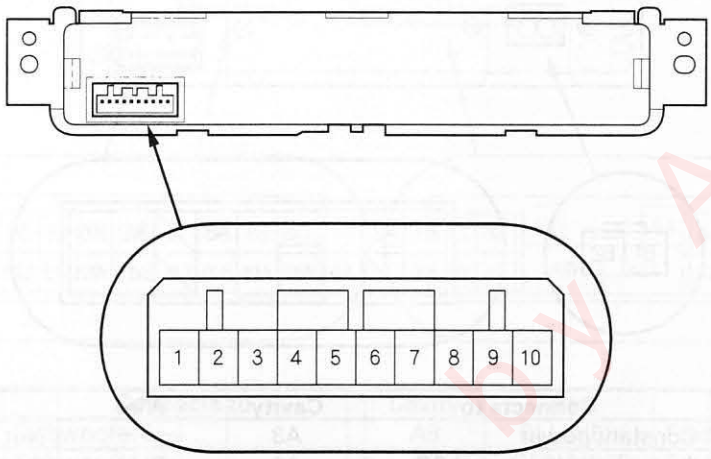

Cavity	Wire	Connects to	Cavity	Wire	Connects to
1	BLK	GND	6	BLU/RED	DATA
2	BLU/ORN	5 V	7	BLU	CE (LOAD)
3	———	Not used	8	BRN/BLK	Shielding GND
4	YEL/RED	RESET	9	RED	LCD back light (+)
5	YEL	CLOCK	10	RED/BLU	LCD back light (−)

Protected by AR

Circuit Diagram

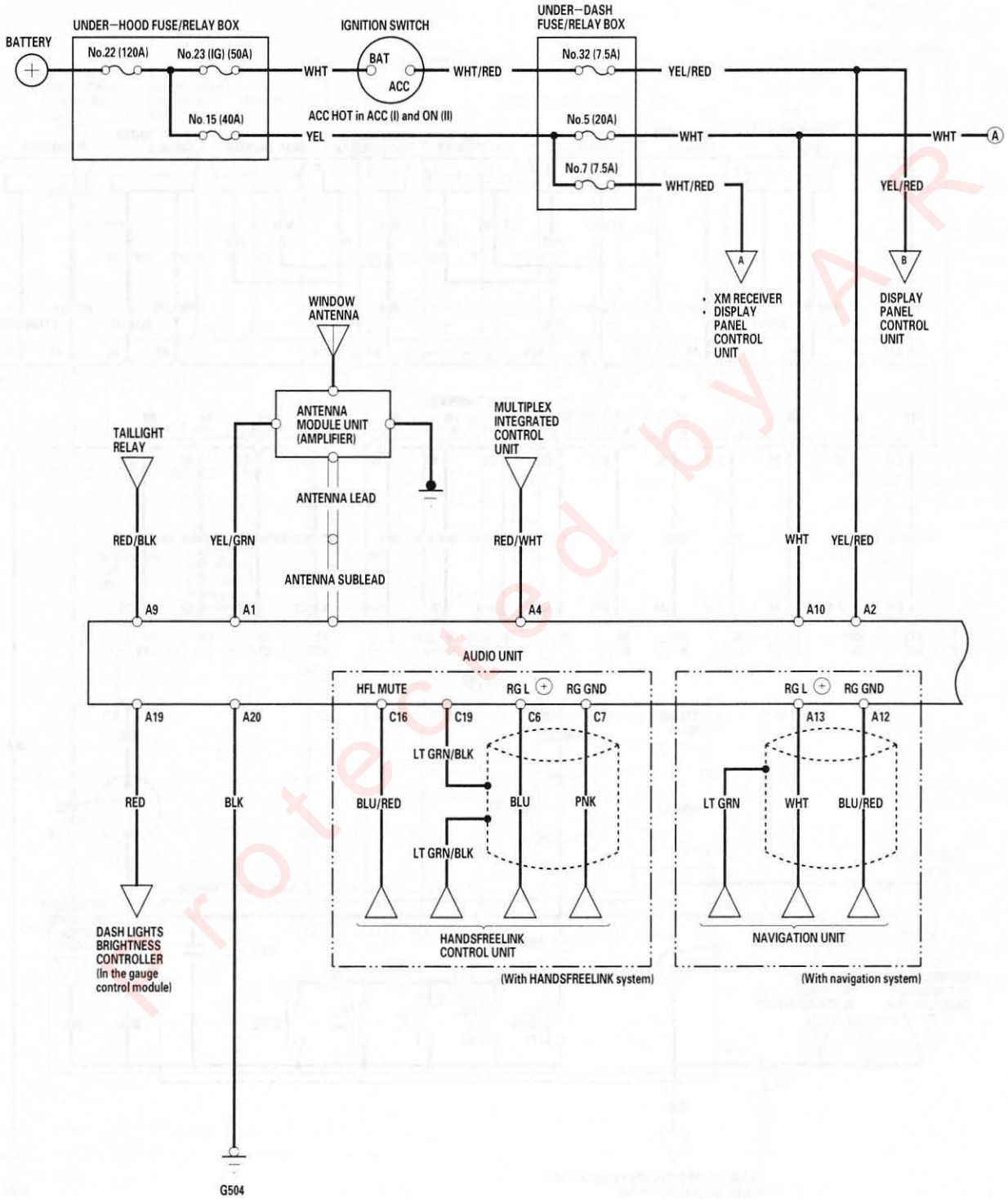

(cont'd)

Circuit Diagram (cont'd)

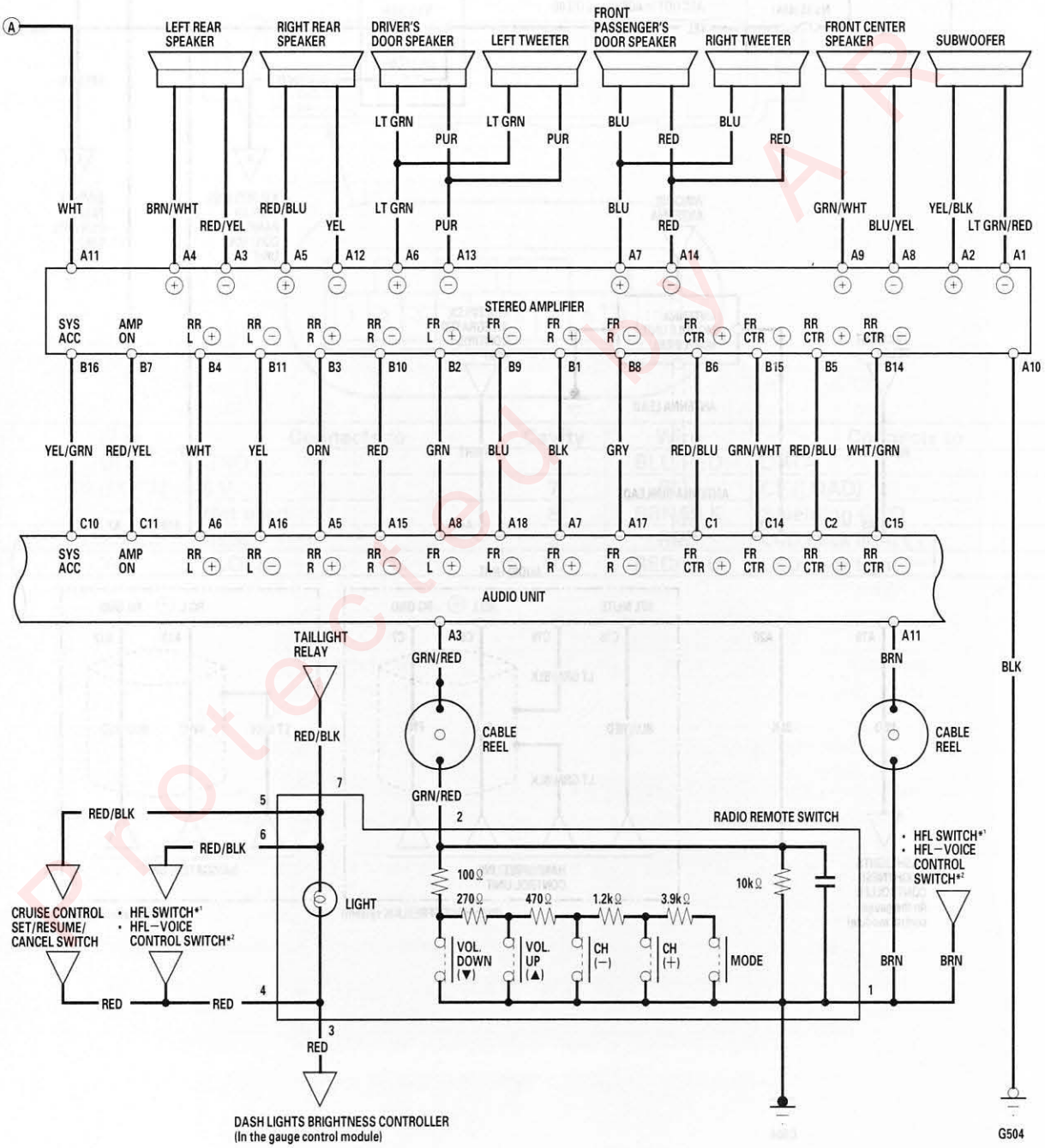

Protected by AP

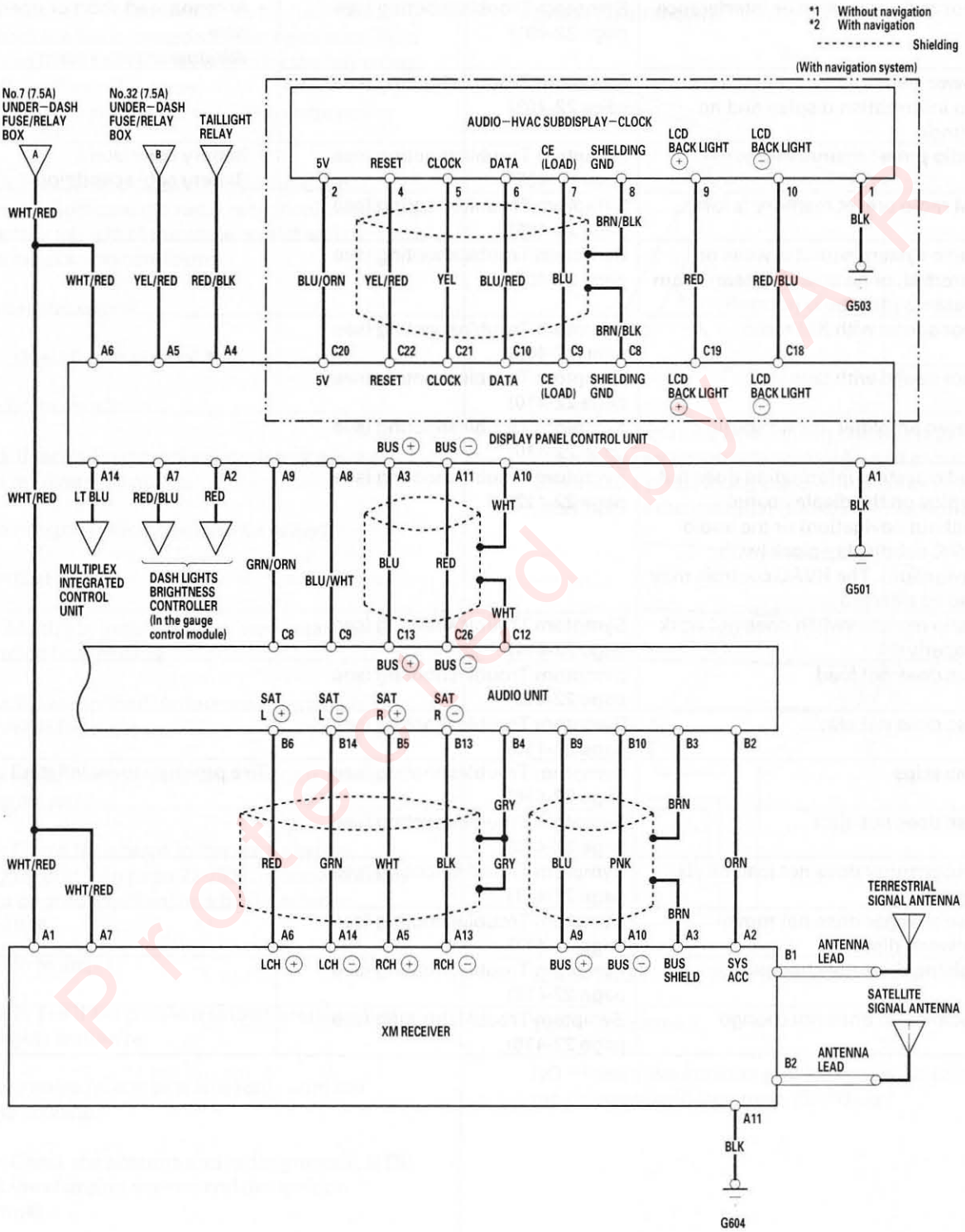

Protected by A R

Symptom Troubleshooting Index

Symptom	Diagnostic procedure	Also check for
Poor radio reception or interference	Symptom Troubleshooting (see page 22-401)	• Antenna lead short or open in the wire • Window antenna open
Power switch will not turn ON (No information display and no sound)	Symptom Troubleshooting (see page 22-403)	
Radio preset memory is lost	Symptom Troubleshooting (see page 22-405)	• Battery condition • Battery cable condition
XM radio preset memory is lost	Symptom Troubleshooting (see page 22-406)	
Audio system sound is weak or distorted, or no sound is heard from speakers (display is normal)	Symptom Troubleshooting (see page 22-407)	
Poor sound with XM radio	Symptom Troubleshooting (see page 22-409)	
Poor sound with tape/disc	Symptom Troubleshooting (see page 22-410)	
Stereo amplifier has no sound	Symptom Troubleshooting (see page 22-410)	
Audio system information does not display on the display panel (without navigation) or the audio-HVAC subdisplay-clock (with navigation). The HVAC controls may also be affected	Symptom Troubleshooting (see page 22-412)	
Radio remote switch does not work properly	Symptom Troubleshooting (see page 22-414)	
Disc does not load	Symptom Troubleshooting (see page 22-415)	
Disc does not play	Symptom Troubleshooting (see page 22-415)	
Disc skips	Symptom Troubleshooting (see page 22-416)	Tire pressure (over inflated)
Disc does not eject	Symptom Troubleshooting (see page 22-416)	
Disc changer does not load all six discs	Symptom Troubleshooting (see page 22-417)	
Disc changer does not move between discs	Symptom Troubleshooting (see page 22-417)	
Volume does not change	Symptom Troubleshooting (see page 22-418)	
Radio tuner does not change	Symptom Troubleshooting (see page 22-418)	

Protected by A K

Symptom Troubleshooting

Poor radio reception or interference

NOTE: Check the radio reception in an open area. Poor reception/interference can be caused by the following:
- The radio station is far away.
- A tall building, a mountain, or high-voltage power line is nearby.

1. Check if each radio station can be received normally. Compare the radio reception/interference to another vehicle of the same model and trim level in the exact same conditions.

   Are they the same?

   YES – Operation is normal. ■

   NO – Go to step 2.

2. Check if the radio reception/interference is the same in several locations.

   Is the reception/interference the same?

   YES – Go to step 3.

   NO – Multipath interference or weak station. Operation is normal. ■

3. Check the reception/interference when the rear window defogger is on.

   Is the reception only poor with the rear window defogger on?

   YES – Check for a break in the rear window defogger grid (see page 22-283), window antenna grid, a poor connection, or a faulty antenna module. ■

   NO – Go to step 4.

4. Check to see if the problem is interference while the engine is running.

   Is there noise (static or whine) only with the engine running?

   YES – Check the antenna and radio grounds. If OK, check the charging system and the ignition system. ■

   NO – Go to step 5.

5. Wrap aluminum foil (A) around the tip of a tester probe (B) as shown.

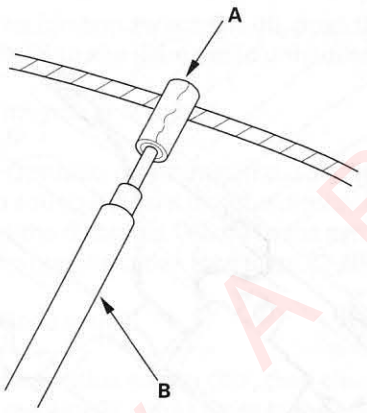

6. Check for continuity by touching one tester probe to the window antenna terminal (A), and move the other tester probe along the antenna wires (for AM reception) or the defogger grid (for FM reception).

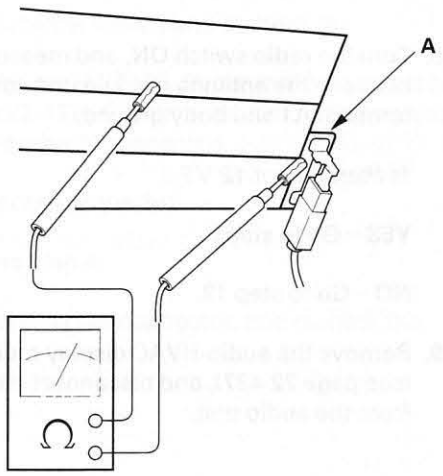

   Is there continuity in all sections of the antenna?

   YES – Go to step 7.

   NO – Repair the antenna grid (see page 22-425) or the defogger grid (see page 22-283). ■

(cont'd)

Protected by AR

Symptom Troubleshooting (cont'd)

7. Disconnect the 1P connector (A), 1P connector (B) and antenna lead (C) from the antenna module unit (D).

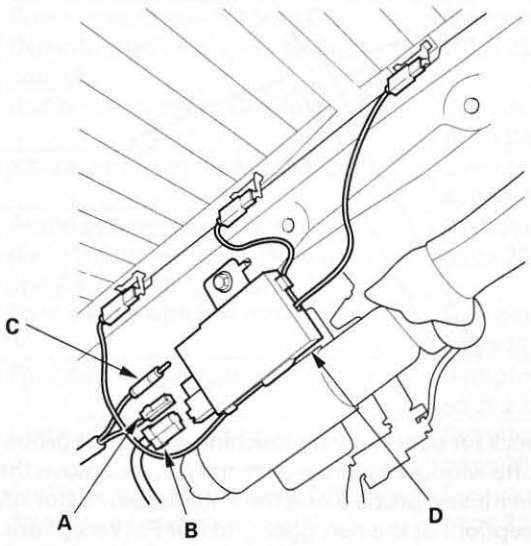

8. Turn the radio switch ON, and measure the voltage between the antenna module unit connector terminal A1 and body ground.

   Is there about 12 V?

   YES – Go to step 9.

   NO – Go to step 13.

9. Remove the audio-HVAC display module assembly (see page 22-437), and disconnect the antenna lead from the audio unit.

10. Check for continuity between the antenna lead center pin at the audio unit lead and the antenna lead center pin at the antenna module unit lead.

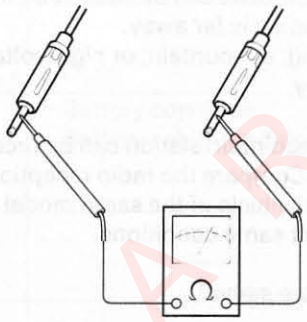

   Is there continuity?

   YES – Go to step 11.

   NO – Replace the antenna lead. ■

11. Check for continuity between the shield surface of the audio unit lead and the shield surface of the antenna module unit lead.

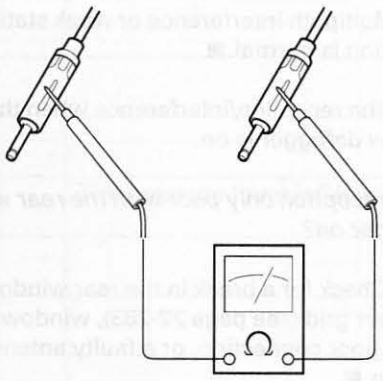

   Is there continuity?

   YES – Go to step 12.

   NO – Replace the antenna lead. ■

Protected by AR

12. Check for continuity between the antenna lead center pin and the surface of the antenna lead.

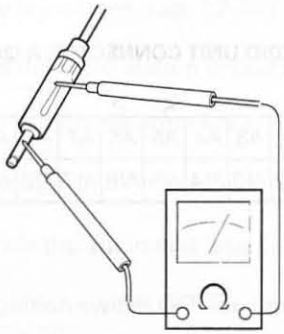

Is there continuity?

YES – Replace the antenna lead. ■

NO – Replace the antenna module and recheck. If the reception is still poor, replace the audio unit. ■

13. Remove the audio-HVAC display module assembly (see page 22-437), and disconnect the audio unit connector A (20P).

14. Check for continuity between audio unit connector A (20P) terminal No. 1 and antenna module connector A1 terminal.

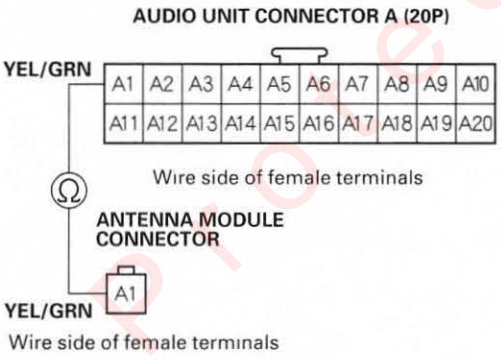

Is there continuity?

YES – Substitute a known-good audio unit and retest. ■

NO – Repair the open in the wire between the audio unit and the antenna module. ■

Power switch will not turn ON (No information display and no sound)

1. With the ignition switch ON (II), push the power switch ON to see if the audio unit turns ON.

Does the power turn on?

YES – Operation is normal. If the display turns on, but no sound is heard or if the display does not turn on, but the display is OK, go to the symptom troubleshooting index (see page 22-400). ■

NO – Go to step 2.

2. Turn the ignition switch OFF, then check the No. 5 (20A) and No. 32 (7.5A) fuses in the under-dash fuse/relay box.

Are the fuses OK?

YES – Go to step 3.

NO – Replace the fuse(s) and recheck. ■

3. Remove the audio-HVAC display module assembly (see page 22-437). Check that audio unit connector A (20P) is properly connected.

Is it connected properly?

YES – Go to step 4.

NO – Reconnect the connector, and recheck the function. ■

(cont'd)

Protected by A

Symptom Troubleshooting (cont'd)

4. Measure voltage between audio unit connector A10 terminal and body ground.

AUDIO UNIT CONNECTOR A (20P)

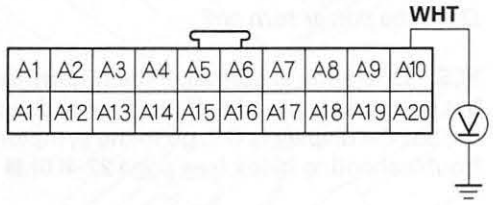

Wire side of female terminals

Is there battery voltage?

YES – Go to step 5.

NO – Repair the open circuit or poor connection in wire between the under-dash fuse/relay box and audio unit connector A10 terminal. ■

5. Turn the ignition switch ON(II).

6. Measure voltage between the audio unit connector A2 terminal and body ground.

AUDIO UNIT CONNECTOR A (20P)

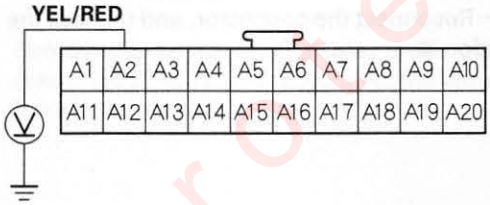

Wire side of female terminals

Is there battery voltage?

YES – Go to step 7.

NO – Repair the open circuit or poor connection in the wire between the under-dash fuse/relay box and audio unit connector A2 terminal. ■

7. Turn the ignition switch OFF, then check for continuity between audio unit connector A20 terminal and body ground.

AUDIO UNIT CONNECTOR A (20P)

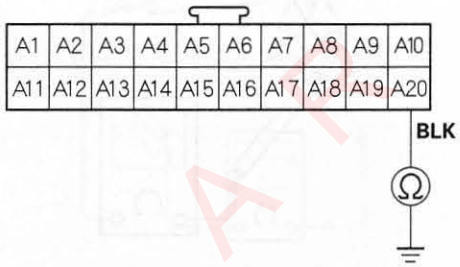

Wire side of female terminals

Is there continuity?

YES – Replace the audio unit (see page 22-419). ■

NO – Repair an open in the wire between audio unit connector A20 terminal and body ground (G504). ■

Protected by A

Radio preset memory is lost

NOTE: If only XM stations are lost, go to XM radio preset memory is lost (see page 22-406).

1. Set each of the radio station preset buttons.

   Do each of the preset buttons set properly?

   YES – Go to step 2.

   NO – Replace the audio unit (see page 22-419). ■

2. Turn the ignition switch OFF for 1 minute, then turn it back to ON (II).

3. Test all the preset buttons for proper recall operation.

   Do the preset buttons recall the set radio stations?

   YES – System is normal at this time. Check connections at the audio unit.

   NO – Replace the audio unit (see page 22-419). ■

Protected by AR

Symptom Troubleshooting (cont'd)

XM Radio preset memory is lost

1. Set each of the XM radio channel preset buttons.

   Do each of the XM radio channel preset buttons set properly?

   YES – Go to step 2.

   NO – Replace the audio unit (see page 22-419). ■

2. Turn the ignition switch OFF for 1 minute, then turn it back to ON (II).

3. Test all of the XM radio channel preset buttons for proper recall operation.

   Do the preset buttons recall the set radio stations?

   YES – System is normal at this time. Check connections at the audio unit. ■

   NO – Go to step 4.

4. Turn the ignition switch OFF.

5. Remove the audio-HVAC display module assembly (see page 22-437), and disconnect the audio unit connector A (20P).

6. Measure voltage between the audio unit connector A10 terminal and body ground.

AUDIO UNIT CONNECTOR A (20P)

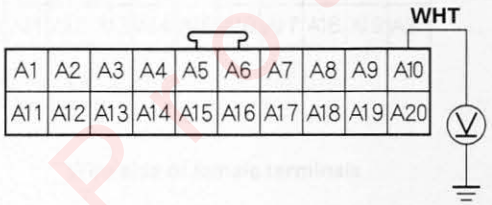

Wire side of female terminals

Is there battery voltage?

YES – Go to step 7.

NO – An open wire between the under-dash fuse/relay box and audio unit connector A10 terminal. ■

7. Check for continuity between the audio unit connector A20 terminal and body ground.

AUDIO UNIT CONNECTOR A (20P)

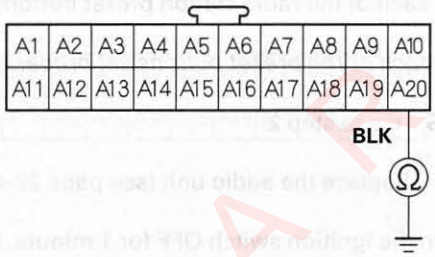

Wire side of female terminals

Is there continuity?

YES – Replace the audio unit (see page 22-419). ■

NO – An open wire between the audio unit connector A20 terminal and body ground (G504). ■

Protected by A

Audio system sound is weak or distorted, or no sound is heard from speakers (display is normal)

1. Check for sound in each mode (AM, FM, XM, and tape/disc).

   Is the sound OK in each mode?

   YES – Intermittent failure. The system is OK at this time. Check for loose connections at the audio unit and amplifier.

   NO – Go to step 2.

2. Do the speaker test (see page 22-389).

   Do any or all of the speakers fail to sound?

   YES –
   - If at least one speaker is OK, go to step 3.
   - If all speakers fail to sound, stereo amplifier has no sound (see page 22-410). ■

   NO –
   - If sound is only poor with XM redio, go to poor sound with XM radio (see page 22-409).
   - If the sound is only poor with AM or FM, go to poor radio reception or interference (see page 22-401).
   - If the sound is only poor with tape/disc, go to poor sound with tape/disc (see page 22-410).

3. Remove the speaker(s) that is fail(s) to sound (see page 22-421), and disconnect its connector.

4. Measure the resistance between the speaker 2P connector terminals No. 1 and No. 2.

   Is the resistance about 2 – 4 Ω ?

   YES – Go to step 5.

   NO – Replace the speaker. ■

5. Remove the right kick panel (see page 20-62), and disconnect the stereo amplifier connector A (14P).

6. Check for continuity between the stereo amplifier connector A (14P) terminals and body ground according to the table.

Speaker	Terminal	Wire color
Driver's door speaker, Left tweeter	A6(+)	LT GRN
	A13(–)	PUR
Front passenger's door speaker, Right tweeter	A7(+)	BLU
	A14(–)	RED
Front center speaker	A9(+)	GRN/WHT
	A8(–)	BLU/YEL
Left rear speaker	A4(+)	BRN/WHT
	A3(–)	RED/YEL
Right rear speaker	A5(+)	RED/BLU
	A12(–)	YEL
Subwoofer	A2(+)	YEL/BLK
	A1(–)	LT GRN/RED

   Is there continuity?

   YES – Repair a short in the wire between the stereo amplifier and speaker. ■

   NO – Go to step 7.

7. Reconnect the 2P connector(s) to the speaker(s).

(cont'd)

Protected by FAR

Symptom Troubleshooting (cont'd)

8. Check for continuity between the stereo amplifier connector A (14P) terminals according to the table.

Speaker	Teminals	
	(+)	(−)
Driver's door speaker, Left tweeter	A6	A13
Front passenger's door speaker, Right tweeter	A7	A14
Front center speaker	A9	A8
Left rear speaker	A4	A3
Right rear seaker	A5	A12
Subwoofer	A2	A1

Is there about 4 Ω ?

YES – Go to step 9.

NO – Repair an open in the wire between the stereo amplifier and the speaker. ■

9. Remove the audio-HVAC display module assembly (see page 22-437), and disconnect the audio unit connectors.

10. Disconnect the stereo amplifier connector B (20P).

11. Check for continuity between the stereo amplifier connector B and body ground according to the table.

Amplifier connector	Wire color
B1	BLK
B2	GRN
B3	ORN
B4	WHT
B5	RED/BLU
B6	BRN
B8	GRY
B9	BLU
B10	RED
B11	YEL
B14	WHT/GRN
B15	GRN/WHT

Is there continuity?

YES – Repair a short in the wire between the stereo amplifier and the audio unit. ■

NO – Go to step 12.

12. Check for continuity between the stereo amplifier connector B and audio unit connectors A and C according to the table.

Audio unit connector	Amplifier connector	Wire color
A6	B4	WHT
A16	B11	YEL
A5	B3	ORN
A15	B10	RED
A8	B2	GRN
A18	B9	BLU
A7	B1	BLK
A17	B8	GRY
C1	B6	BRN
C14	B15	GRN/WHT
C2	B5	RED/BLU
C15	B14	WHT/GRN

Is there continuity?

YES – Go to step 13.

NO – Repair an open in the wire between the stereo amplifier and audio unit. ■

13. Substitute a known-good stereo amplifier.

14. Reconnect all connectors.

15. Do the speaker test (see page 22-389).

Does any speaker fail to sound?

YES – Replace the audio unit (see page 22-419). ■

NO – The original stereo amplifier is fauty; replace it. ■

Protected by AR

Poor sound with XM radio

1. Turn the ignition switch OFF.
2. Disconnect the audio unit connector B (14P) and XM receiver connector A (14P).
3. Check for continuity between the XM receiver connector A (14P) and body ground according to the table.

XM receiver terminal	Wire color
A6	RED
A14	GRN
A5	WHT
A13	BLK
A7	BLU
A10	PNK
A2	ORN

Is there continuity?

YES – Repair short in the wire between the audio unit and the XM receiver. ■

NO – Go to step 4.

4. Check for continuity between the XM receiver connector A (14P) and the audio unit connector B (14P) according to the table.

XM receiver terminal	Audio unit terminal	Wire color
A6	B6	RED
A14	B14	GRN
A5	B5	WHT
A13	B13	BLK
A9	B9	BLU
A10	B10	PNK
A2	B2	ORN

Is there continuity?

YES – Go to step 5.

NO – Repair open in the wire between the audio unit and the XM receiver. ■

5. Turn the ignition switch to the ACC (I).
6. Check for voltage between XM receiver connector A (14P) terminals A1 and A7 and body ground, individually.

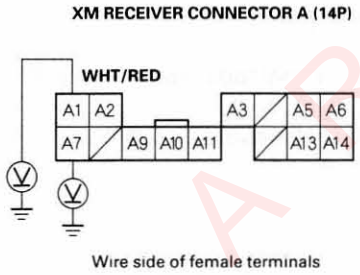

Is there battery voltage?

YES – Go to step 7.

NO – Repair open in the wire between fuse No. 32 (7.5A) in the under-dash fuse/relay box and the XM receiver. ■

7. Check for continuity between XM receiver connector A (14P) termianl A11 and body ground.

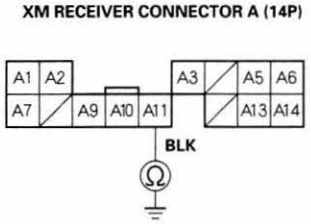

Is there continuity?

YES – Go to step 8.

NO – Repair open in the wire between the XM receiver and G604. If the wire is OK, repair G604. ■

8. Substitute a known-good XM receiver, then reconnect all connectors and test the XM radio.

Is the sound normal?

YES – Replace the XM receiver. ■

NO – Replace the audio unit. ■

Protected by AR

Symptom Troubleshooting (cont'd)

Poor sound with tape/disc

1. Try several known-good tapes/discs in the audio unit.

   Is the sound quality normal?

   YES – The original tape/disc is faulty. ■

   NO – Replace the audio unit. ■

Stereo amplifier has no sound

1. Turn the ignition switch OFF.
2. Disconnect the stereo amplifier connector A (14P).
3. Check for voltage between stereo amplifier connector A (14P) terminal A11 and body ground.

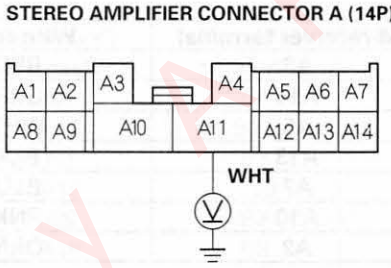

Wire side of female terminals

Is there battery voltage?

YES – Go to step 4.

NO – Repair an open in the wire between fuse No. 5 (20A) in the under-dash fuse/relay box and the stereo amplifier. ■

4. Check for continuity between stereo amplifier connector A (14P) terminal A10 and body ground.

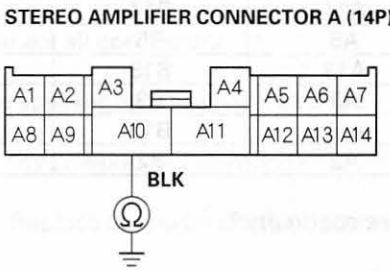

Wire side of female terminals

Is there continuity?

YES – Go to step 5.

NO – Repair open in the wire between the XM receiver and G504. If the wire is OK, repair G504. ■

Protected by MR

5. Disconnect audio unit connector C (26P).

6. Check for continuity between the stereo amplifier connector A (14P) and the audio unit connector C (26P) according to the table.

Stereo amplifier terminals	Audio unit terminal	Wire color
B16	C10	YEL/GRN
B7	C11	RED/YEL

Is there continuity?

YES – Go to step 7.

NO – Repair open in the wire between the stereo amplifier and the audio unit. ■

7. Substitute a known-good stereo amplifier, then reconnect all connectors and do the speaker test (see page 22-389).

Is the sound normal?

YES – Replace the stereo amplifier. ■

NO – Replace the audio unit. ■

Protected by AR

Symptom Troubleshooting (cont'd)

Audio system information does not display on the display panel (without navigation) or audio-HVAC subdisplay-clock (with navigation). The HVAC controls may also be affected.

1. Check for DTCs in the display module control unit.

   Are there any DTCs?

   YES – Troubleshoot the DTCs. ■

   NO – Go to step 2.

2. Disconnect display panel control unit connector A (14P).

3. Disconnect audio unit connector C (26P).

4. Check for continuity between audio unit connector C (26P) terminals and display panel control unit connector A (14P) terminals according to the chart.

Audio unit terminal	Display panel control unit (14P) terminal	Wire color
C26	A11	RED
C13	A3	BLU
C9	A8	BLU/WHT
C8	A9	GRN/ORN

   Is there continuity?

   YES – Go to step 5.

   NO – Repair an open in the wire between the audio unit and the display panel control unit. ■

5. Check for continuity between audio unit connector C (26P) terminals in the table and body ground.

Wire color	Audio unit (26P) terminal
RED	C26
BLU	C13
BLU/WHT	C9
GRN/ORN	C8

   Is there continuity?

   YES – Repair a short in the wire between the audio unit and the display module control unit. ■

   NO –
   - Without navigation: Go to step 6.
   - With navigation: Go to step 9.

6. Substitute a known-good display panel.

7. Reconnect all connectors.

8. Check the display.

   Does the display operate properly?

   YES – Replace the display panel control unit. ■

   NO – Replace the audio unit. ■

9. Check the connections at the audio-HVAC subdisplay-clock 10P connector and the display panel control unit connector (22P).

   Are the connectors and terminals connected properly?

   YES – Go to step 10.

   NO – Repair the connection and recheck. ■

10. Check for continuity between the audio-HVAC subdisplay-clock 10P connector and the display panel control unit connector (22P) terminals for each wire listed in the chart.

Wire	Audio-HVAC subdisplay-clock connector (10P) terminal	Display panel control unit connector (22P) terminal
BLU/ORN	2	C20
YEL/RED	4	C22
YEL	5	C21
BLU/RED	6	C10
BLU	7	C9
BRN/BLK	8	C8
RED	9	C19
RED/BLU	10	C18
BLK	3	(body ground)

    Is there continuity?

    YES – Go to step 11.

    NO – Repair an open in the wire between the display panel control unit and the audio-HVAC subdisplay-clock. ■

Protected by FCR

11. Check for continuity between each audio-HVAC subdisplay-clock 10P connector terminal and body ground.

Wire	Audio-HVAC subdisplay-clock connector (10P) terminal
BLU/ORN	2
YEL/RED	4
YEL	5
BLU/RED	6
BLU	7
RED	9
RED/BLU	10

Is there continuity?

YES — Repair the short to ground in the wire between the display panel control unit and the audio-HVAC subdisplay-clock. ■

NO — Go to step 12.

12. Substitute a known-good audio-HVAC subdisplay-clock and recheck.

Does the subdisplay work properly?

YES — Replace the original audio-HVAC subdisplay-clock. ■

NO — Substitute a known-good display panel control unit and retest. If the problem is gone, replace the original display panel control unit. ■

Protected by AR

Symptom Troubleshooting (cont'd)

Radio remote switch does not work properly

1. Test the radio remote switch (see page 22-423).

   Is the radio remote switch OK?

   YES – Go to step 2.

   NO – Replace the radio remote switch. ■

2. Remove the audio-HVAC display module assembly (see page 22-437).

3. Measure resistance between the audio unit connector (20P) A3 and A11 terminals as specified in the check list.

AUDIO UNIT CONNECTOR A (20P)

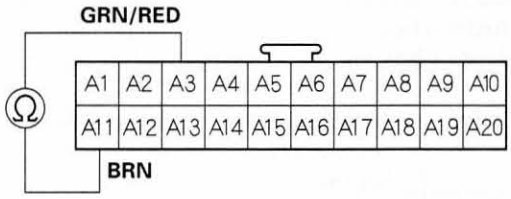

Wire side of female terminals

CHECK LIST

Button held down	VOL DOWN	VOL UP	CH (–)	CH (+)	MODE	(NONE)
Resistance	about 100 Ω	about 370 Ω	about 840 Ω	about 2 KΩ	about 4 KΩ	10 kΩ

Is resistance OK?

YES – Go to step 4.

NO – Repair open or high resistance in the circuit between the audio unit and the radio remote switch. If the wires are OK, replace the cable reel (see page 23-140). ■

4. Check for continuity between body ground and audio unit connector (20P) A3 and A11 terminals individually.

AUDIO UNIT CONNECTOR A (20P)

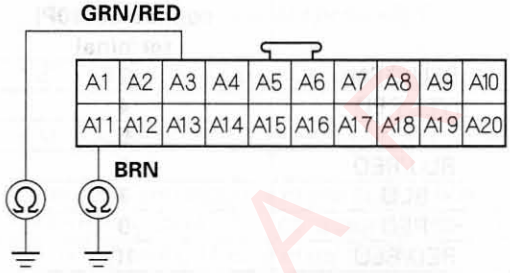

Wire side of female terminals

Is there continuity?

YES – Repair the short to body ground in the circuit between the audio unit and the radio remote switch. If the wires are OK, replace the cable reel (see page 23-140). ■

NO – Replace the audio unit (see page 22-419). ■

Protected by AR

Disc does not load

NOTE:
- Disc labels should not be used in the audio unit. They may damage the player machanism.
- Make sure the CD or DVD disc is compatable with the system (see the owner's manual for more information).

1. Insert a known-good disc to see if the symptom can be duplicated.

   Does the CD load?

   YES – Operation is normal. If the disc loads normally, but will not play, go to disc does not play (see page 22-415). ■

   NO – Go to step 2.

2. Insert another disc.

   Does the disc load?

   YES – The original disc is faulty. ■

   NO – Replace the audio unit (see page 22-419). ■

Disc does not play

1. Try loading a disc.

   Does the disc load?

   YES – Go to step 2.

   NO – Go to disc does not load (see page 22-415). ■

2. Insert a disc to see if the symptom can be duplicated.

   Does the disc load?

   YES – Operation is normal. ■

   NO – Go to step 3.

3. Insert a known-good disc.

   Does the disc load?

   YES – The original disc is faulty or is an unreadable format. ■

   NO – Replace the audio unit (see page 22-419). ■

Protected by A R

Symptom Troubleshooting (cont'd)

Disc skips

1. Confirm that the tires are properly inflated.
2. Test drive to identify when the skipping occurs.

   Does the skipping only occur on rough roads?

   YES – Go to step 3.

   NO – Go to step 4.
3. Compare the disc skipping to a known-good vehicle under the same conditions.

   Does the known-good vehicle's disc skip under the same conditions?

   YES – Operation is normal. ■

   NO – Go to step 4.
4. Try a known-good disc.

   Does the symptom recur?

   YES – Replace the audio unit (see page 22-419). ■

   NO – The original disc is faulty. ■

Disc does not eject

1. Turn the audio system ON.

   Does the system turn on?

   YES – Go to step 2.

   NO – Go to power switch will not turn ON (see page 22-403). ■
2. Check to see if the disc is ejected correctly with no binding by pushing the EJECT button.

   Is it normal?

   YES – Operation is normal. ■

   NO – The original disc is faulty. ■

Protected by AR

Disc changer does not load all six discs

NOTE: Disc labels should not be used in the audio unit. They may damage the player mechanism.

1. Try loading six discs into the audio unit.

   Does the audio unit accept all six discs?

   YES – Intermittent failure, the audio unit is OK at this time. ■

   NO – Go to step 2.

2. Try to loading the disc player with known-good discs.

   Does the audio unit accept all six discs?

   YES – At least one of the original disc is faulty. ■

   NO – Replace the audio unit (see page 22-419). ■

Disc changer does not move between discs

NOTE: Disc labels should not be used in the audio unit. They may damage the player mechanism.

1. Insert the six discs into the audio unit and see if the changer moves between discs.

   Does the changer operate normally?

   YES – Intermittent failure, the disc changer is OK at this time. ■

   NO – Go to step 2.

2. Insert six known-good discs into the audio unit.

   Does the changer operate normally?

   YES – At least one of the original discs is faulty. ■

   NO – Replace the audio unit (see page 22-419). ■

Protected by AR

Symptom Troubleshooting (cont'd)

Volume does not change

NOTE: Set the fader and balance position to the center.

1. Listen for sound from the speakers.

   Is the sound normal?

   YES – Go to step 2.

   NO – Go to audio system sound is weak or distorted, or no sound is heard from speakers (see page 22-407). ■

2. Check the audio information on the display panel control unit (without navigation) or audio-HVAC subdisplay-clock (with navigation).

   Does the audio information display properly?

   YES – Intermittent failure, the system is OK at this time. ■

   NO – Go to step 3.

3. Operate the volume knob to see if the volume changes.

   Does it change?

   YES – Operation is normal. ■

   NO – Replace the audio unit (see page 22-419). ■

Radio tuner does not change

1. Check the audio information on the display panel control unit (without navigation) or audio-HVAC subdisplay-clock (with navigation).

   Does the audio information display properly?

   YES – Intermittent failure, the system is OK at this time. ■

   NO – Go to step 2.

2. Operate the tuning knob to see if the radio station changes.

   Does it change?

   YES – Intermittent failure, the tuning knob is OK at this time. ■

   NO – Replace the audio unit (see page 22-419). ■

Protected by AR

Audio Unit Removal/Installation

1. Remove the audio-HVAC display module assembly (see page 22-437).
2. Remove the screws and bolts, then separate the audio unit (A) and display panel control unit (B).

   NOTE: To avoid damage, remove the screws (C) first, then remove the bolts (D).

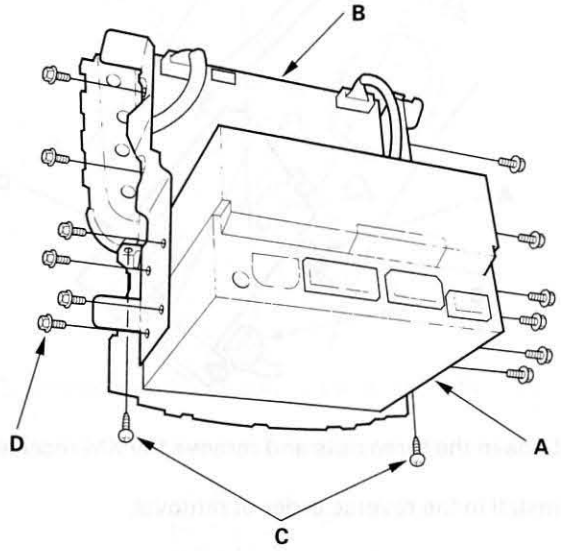

3. Install the audio unit to the display panel control unit in the reverse order of removal.

Audio-HVAC Subdisplay-Clock Removal/Installation

With Navigation

1. Remove the upper panel (see page 20-83).
2. Disconect the 10P connector (A) from the audio-HVAC subdisplay-clock (B).

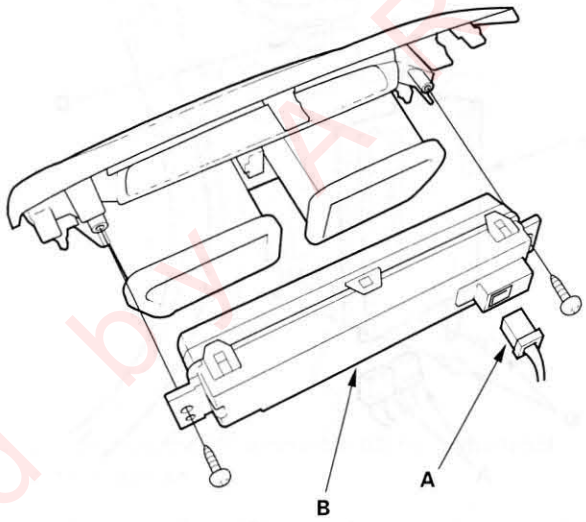

3. Remove the two screw and audio-HVAC subdisplay-clock.
4. Install in the reverse order of removal.

Protected by AP

Stereo Amplifier Removal/ Installation

1. Remove the right kick panel (see page 20-62).
2. Remove the stereo amplifier connectors (A) from the stereo amplifier (B).

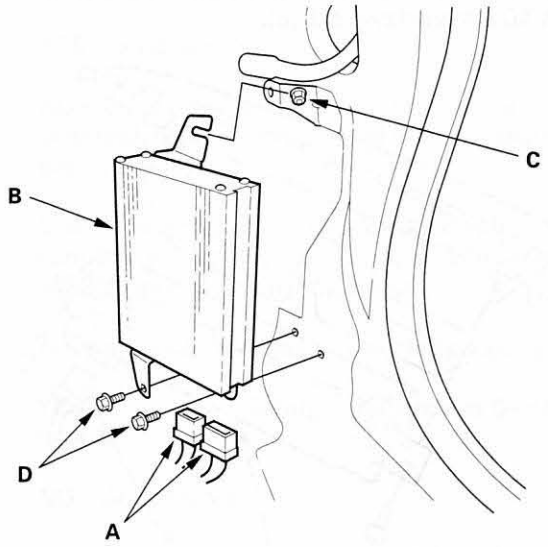

3. Loosen the mounting nut (C), and remove the two mounting bolts (D), then remove the stereo amplifier.
4. Install the stereo amplifier in the reverse order of removal.

XM Receiver Removal/Installation

1. Open the trunk lid and remove the right trunk side trim panel (see page 20-68).
2. Disconect the antenna 2P connector (A) and 14P connector (B) from the XM receiver (C).

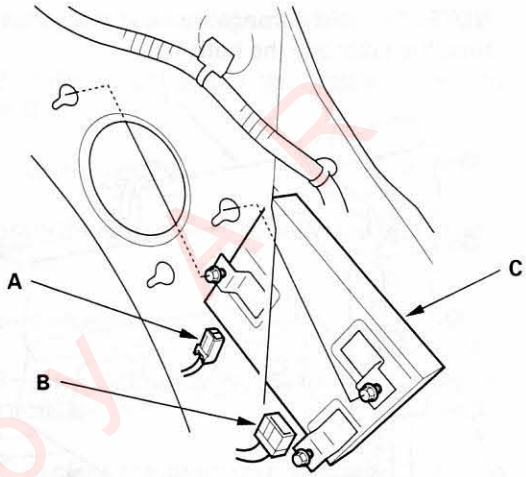

3. Loosen the three nuts and remove the XM receiver.
4. Install in the reverse order of removal.

Protected by AR

Speaker Replacement

Tweeter

1. Carefully pry the tweeter grille (A) out from the dashboard. Be careful not to damage the tweeter grille and the dashboard.

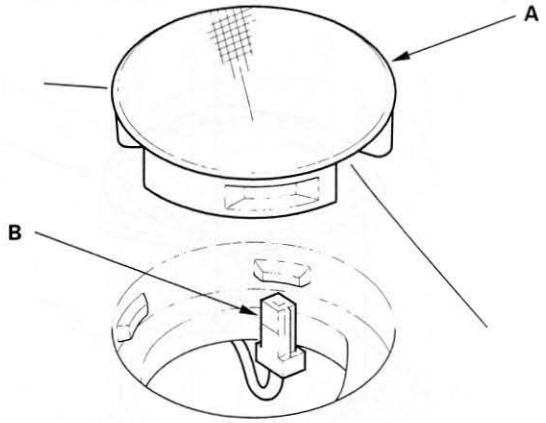

2. Disconnect the 2P connector (B) from the tweeter.
3. Remove the tweeter speaker from the speaker grille.

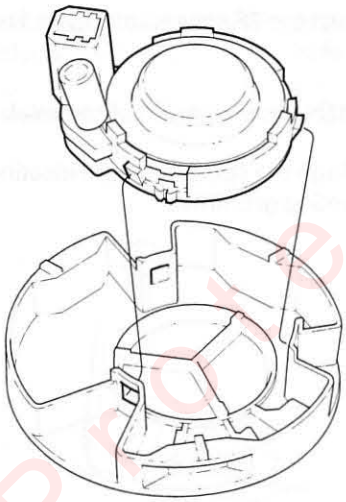

4. Install in the revese order of removal.

Front Center Speaker

1. Carefully pry the front center speaker grille (A) out from the dashboard. Be careful not to damage the speaker grille and the dashboard.

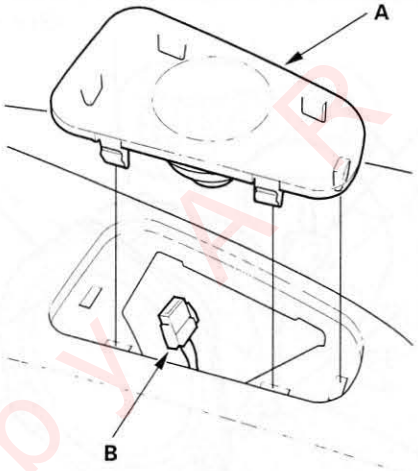

2. Disconnect the 2P connector (B) from the front center speaker.
3. Remove the front center speaker from the speaker grille.

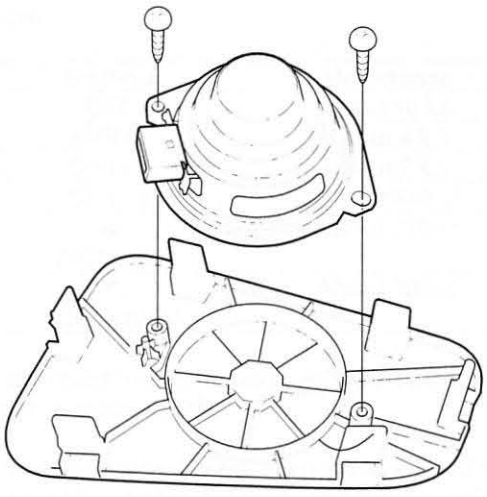

4. Install in the reverse order of removal.

(cont'd)

Protected by MAR

Speaker Replacement (cont'd)

Front Door Speaker

1. Remove the door panel (see page 20-7).
2. Remove the three mounting screws from the front door speaker (A).

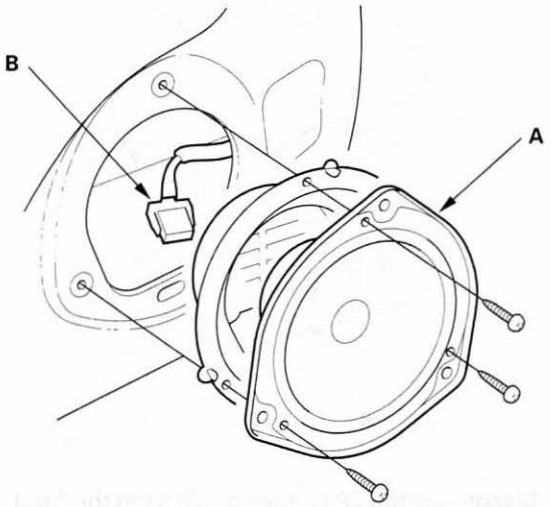

3. Disconnect the 2P connector (B), and remove the front door speaker.
4. Install in the reverse order of removal.

Rear Speaker

1. Remove the rear shelf (see page 20-66).
2. Remove the three mounting screws from the rear speaker (A).

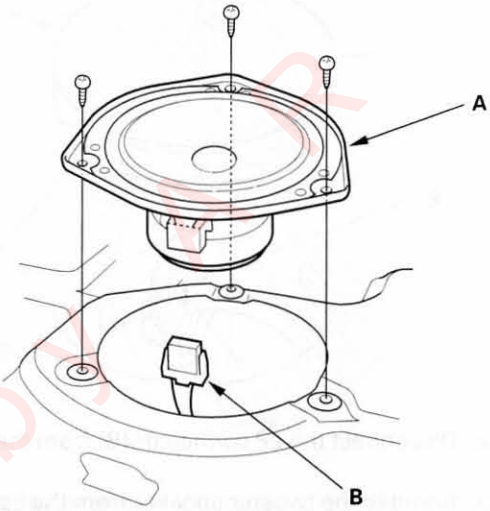

3. Disconnect the 2P connector (B), and remove the rear speaker.
4. Install in the reverse order of removal.

   NOTE: Align the speaker on the locating tabs (A) of the mounting grommet.

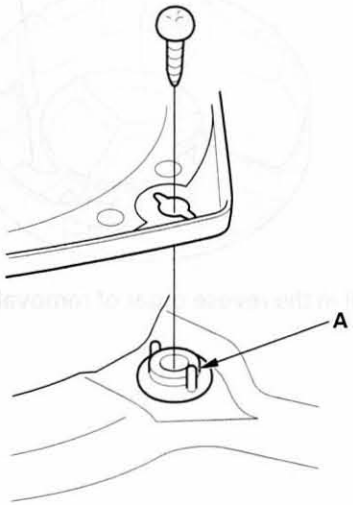

Protected by

Subwoofer

1. Remove the rear shelf (see page 20-66).
2. Remove the four mounting bolts from the subwoofer (A).

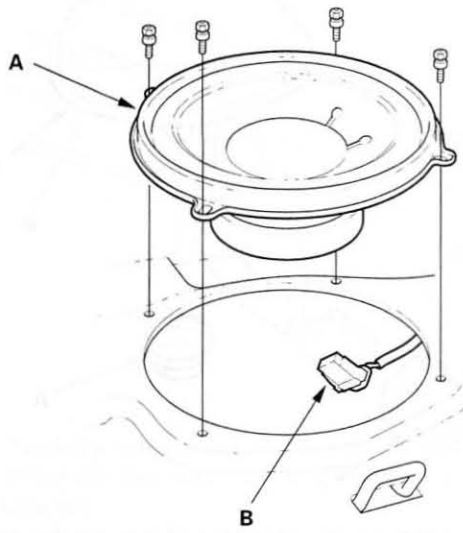

3. Disconnect the 2P connector (B), and remove the subwoofer.
4. Install in the reverse order of removal.

Radio Remote Switch Test/ Replacement

1. Remove the driver's airbag assembly (see page 23-128).
2. Remove the 7P connector (A) from the radio remote switch (B).

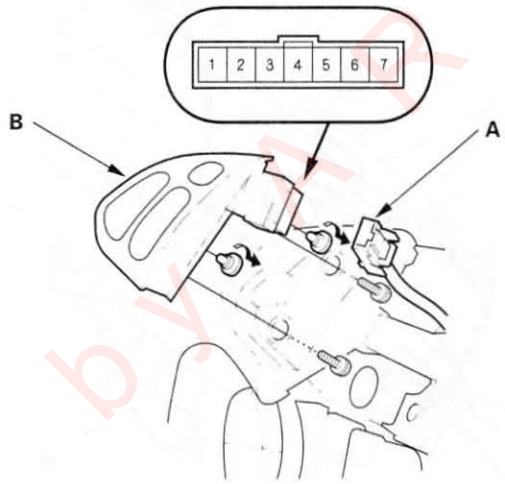

3. Remove the two mounting screws and the switch.
4. Measure resistance between the No. 1 and No. 2 terminals in each switch position according to the table.

Position	Resistance
OFF	About 10 kΩ
MODE	About 4 kΩ
CH (+)	About 2 kΩ
CH (−)	About 840 Ω
▲ (VOL.UP)	About 370 Ω
▼ (VOL.DOWN)	About 100 Ω

5. If the resistance is not as specified, replace the radio remote switch.
6. Check for continuity between the No. 3 and No. 4 terminals, and No. 5, No. 6* and No. 7 terminals. There should be continuity.
   *: With HandsFreeLink system or navigation system
7. If the continuity check is not as specified, replace the switch.

Protected by AKR

Antenna Module Unit Replacement

1. Remove the left C-pillar trim (see page 20-66).
2. Disconnect the 1P connectors (A) from the antenna module unit (B).

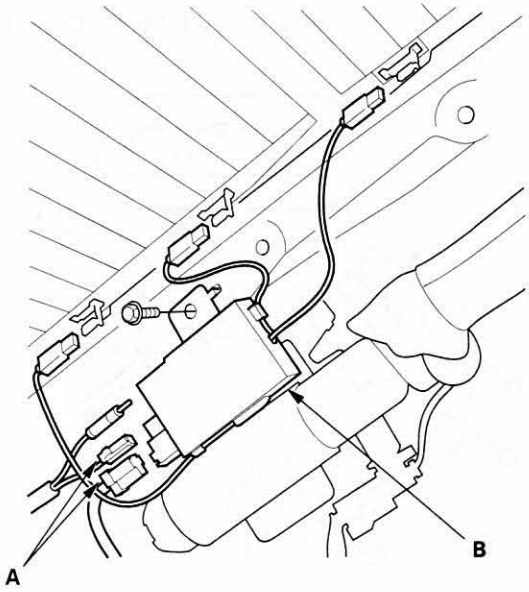

3. Disconnect all connectors, then remove the bolt and antenna module unit.
4. Install in the reverse order of removal.

XM Antenna Replacement

1. Remove the headliner (see page 20-70).
2. Remove the nut (A) from the XM antenna (B).

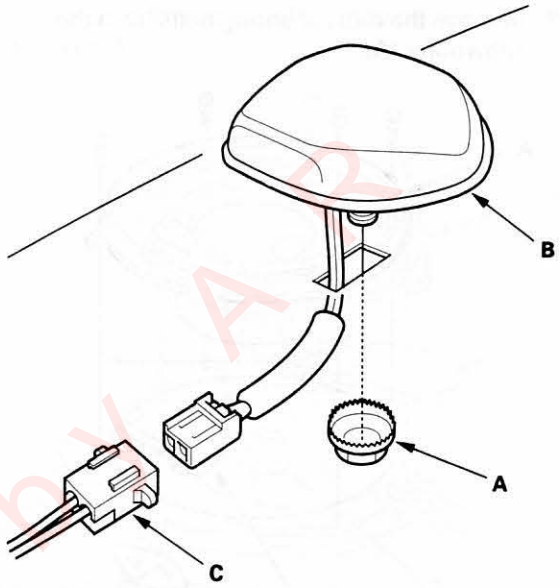

3. Disconnect the connector (C) and remove the XM antenna.
4. Install in the reverse order of removal.

Protected by AR

Window Antenna Repair

NOTE: To make an effective repair, the broken section must be no longer than one inch.

1. Lightly rub the area around the broken section (A) with fine steel wool, then clean it with alcohol.

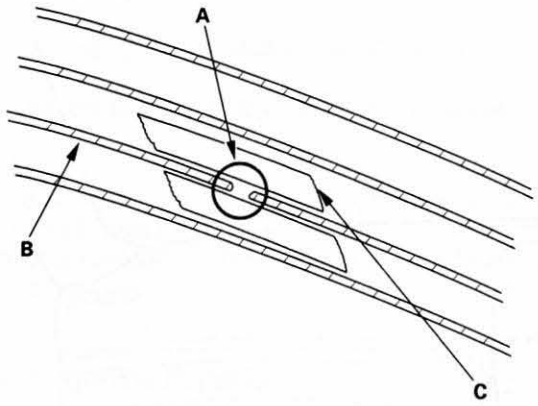

2. Carefully mask above and below the broken portion of the window antenna wire (B) with cellophane tape (C).

3. Mix the silver conductive paint thoroughly. Using a small brush, apply a heavy coat of paint (A) extending about 1/8" on both sides of the break. Allow 30 minutes to dry.

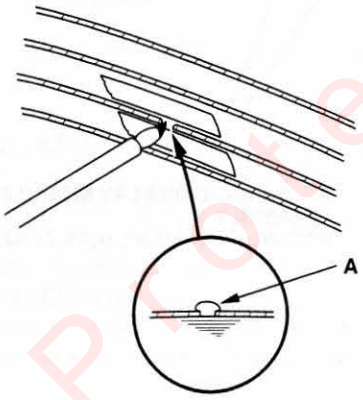

4. Check for continuity in the repaired wire.

5. Apply a second coat of paint in the same way. Let it dry 3 hours before removing the tape.

Protected by AR

Component Location Index

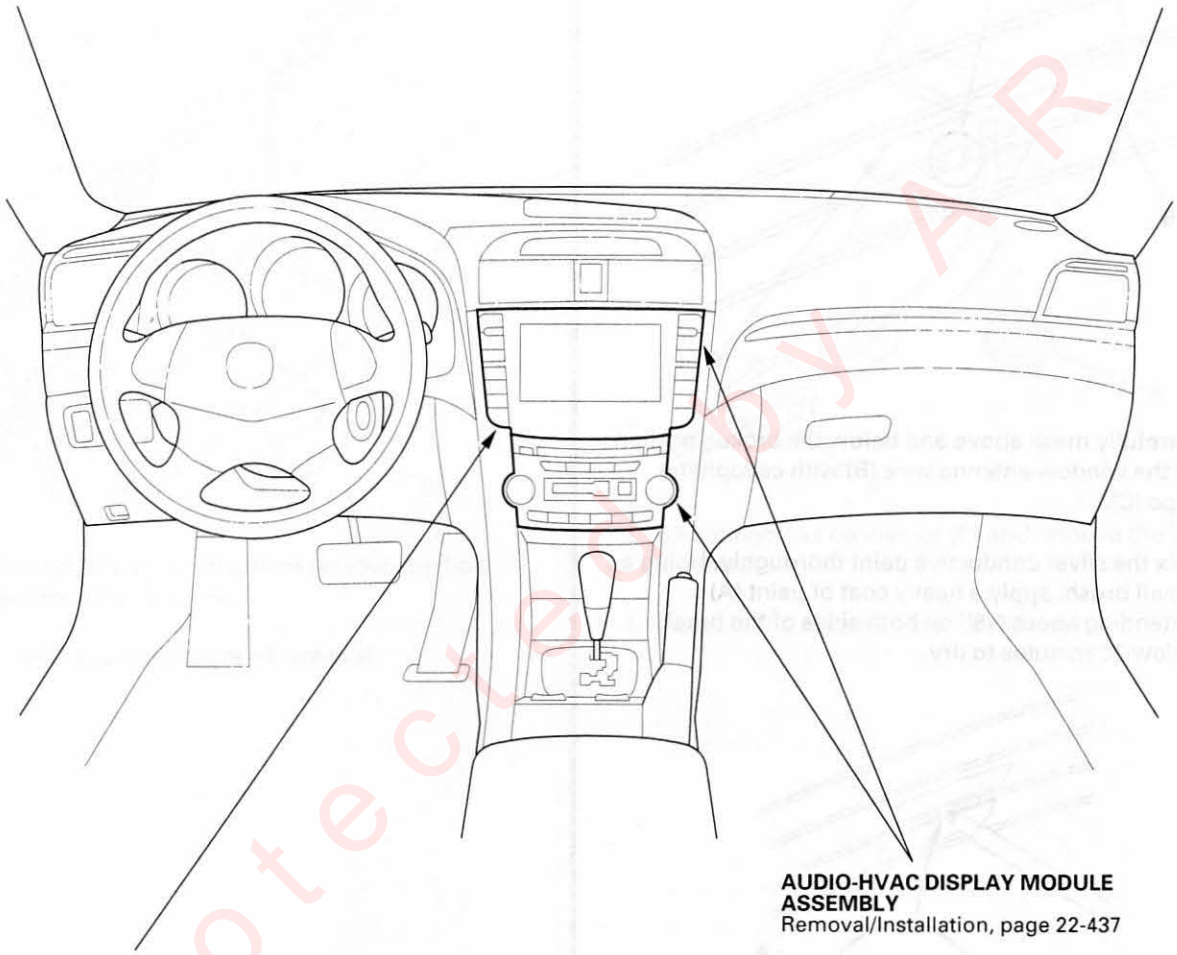

AUDIO-HVAC DISPLAY MODULE ASSEMBLY
Removal/Installation, page 22-437

DISPLAY PANEL CONTROL UNIT
General Troubleshooting Information, page 22-427
System Description, page 22-428
DTC Troubleshooting, page 22-432
Control Unit Input Test, page 22-435
Display Panel Control Unit Removal/Installation, page 22-438

Protected by AR

General Troubleshooting Information

Resetting the Display Panel

The procedure should be done to reset the display panel control unit if the HDS is unable to clear DTCs.

1. Press and hold the rear window defogger button, the recirculation button, and passenger's temperature control up (hot) buttons.
2. Turn the ignition switch to the ACC (I) position while continuing to hold the buttons.
3. Hold the buttons for 6 seconds, then release.

NOTE:
- With navigation: If the radio is on, the audio-HVAC subdisplay-clock will flash as the display panel is being reset. The clock will reset to 1:00.
- Without navigation: If the radio is on, the display panel control unit screen will flash as the display panel is being reset.

Self-diagnosis Function

The display panel control unit has a self-diagnostic function that covers the back light and LCD check, button light check and button operation check.

Entering the Self-diagnosis Function

1. Press and hold the driver's "AUTO" button and "DUAL" button.
2. Turn the ignition switch ACC (I), then release the buttons.

HVAC Button Check

Press any climate control button and the corresponding segment or LED will turn on to ensure LCD driver functionally and as button confirmation.

Back Light , LCD, Switch Light Check

Turn the combination light switch ON.

- Turn on the LCD back light.
- Turn on all LCD segments.
- Brings screen to full bright (with navigation).
- A beep sound is heard when pressing any climate control button (with navigation).

If the display panel control unit fails to complete any of the functions of the self-diagnostic function, go to the display panel control unit input test (see page 22-435).

Protected by A R

General Troubleshooting Information (cont'd)

Communication Circuit Test

1. Remove the upper panel (see page 20-83)
2. Disconnect the display panel control unit connector B (6P) and connect the special tool (07AAZ-SEPA100) to display panel control unit.
3. Push and hold the "Drivers AUTO" button for 5 seconds.
4. The driver's temperature and passenger's temperature indicators will display a code. Check the code in the list below. If the code is considered OK, then the center panel module's communication circuit is OK. If the code is considered a fault, replace the center panel module.

Temp Indicator Code	Code Description	Communication circuit is:	Possible problems:
00 00	Communication check normal	OK	• Communication circuit in the climate control unit is faulty • Short or open in the communication circuit between the climate control unit and the display panel control unit
00 01	Over-run error	Faulty	• The display panel control unit is faulty
00 02	Framing error	Faulty	• The display panel control unit is faulty
00 04	Parity error	Faulty	• The display panel control unit is faulty
00 08	Timeout for 1st byte	Faulty	• The display panel control unit is faulty
00 10	Timeout between data characters	Faulty	• The display panel control unit is faulty
00 20	Other fault in communication 1	Faulty	• The display panel control unit is faulty
00 40	Other fault in communication 2	Faulty	• The display panel control unit is faulty
00 80	Timeout between data characters	Faulty	• The display panel control unit is faulty
FF FF	Difference between sent data and received data	Faulty	• The display panel control unit is faulty

If the display module control unit fails to complete any of the functions of the self-diagnostic function, go to the display module control unit input test (see page 22-435)

Exiting the Self-diagnostic Function

- Press and hold the "Passenger's AUTO" button for 3 seconds
- Turn the ignition switch OFF.

Protected by A P

System Description

Display Panel Control Unit Inputs and Outputs

When replacing a display panel control unit connector, match the wires to the cavities listed in the following table.

With Navigation

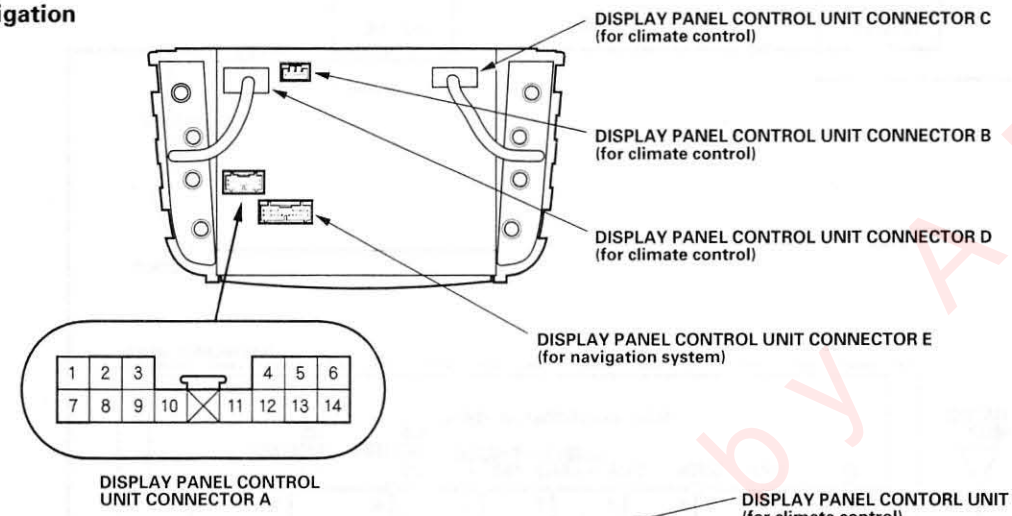

Without Navigation

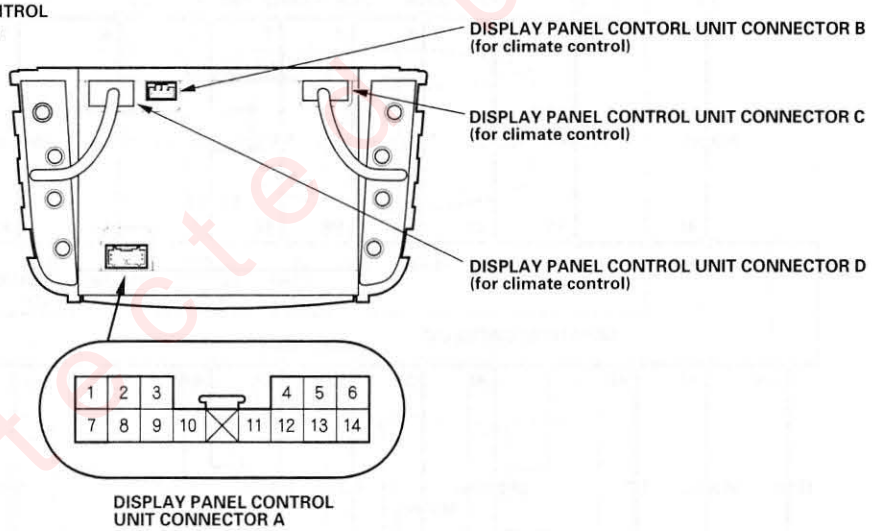

NOTE: For the display panel control unit connectors B, C, and D, refer to the Circuit Diagram of Climate Control (see page 21-22), and for the display panel control unit connector E, refer to the System Description of Navigation System (see page 22-462).

Cavity	Wire	Connects to	Input/Output
A1	BLK	Ground (G501)	———
A2	RED	Dash lights brightness controller (bulb)	Input
A3	BLU	BUS (+)	Input
A4	RED/BLK	Lights-on signal	Input
A5	YEL/RED	ACC (Main stereo power supply)	Input
A6	WHT/RED	Constant power	Input
A7	RED/BLU	Dash lights brightness controller (LED)	Input
A8	BLU/WHT	Audio unit (IMS 1)	Output
A9	GRN/ORN	Audio unit (IMS 0)	Output
A10	WHT	Shield GND	———
A11	RED	BUS (−)	Output
A12	———	Not used	———
A13	———	Not used	———
A14	LT BLU	Multiplex integrated control unit	Input/Output

Protected by AR

Circuit Diagram

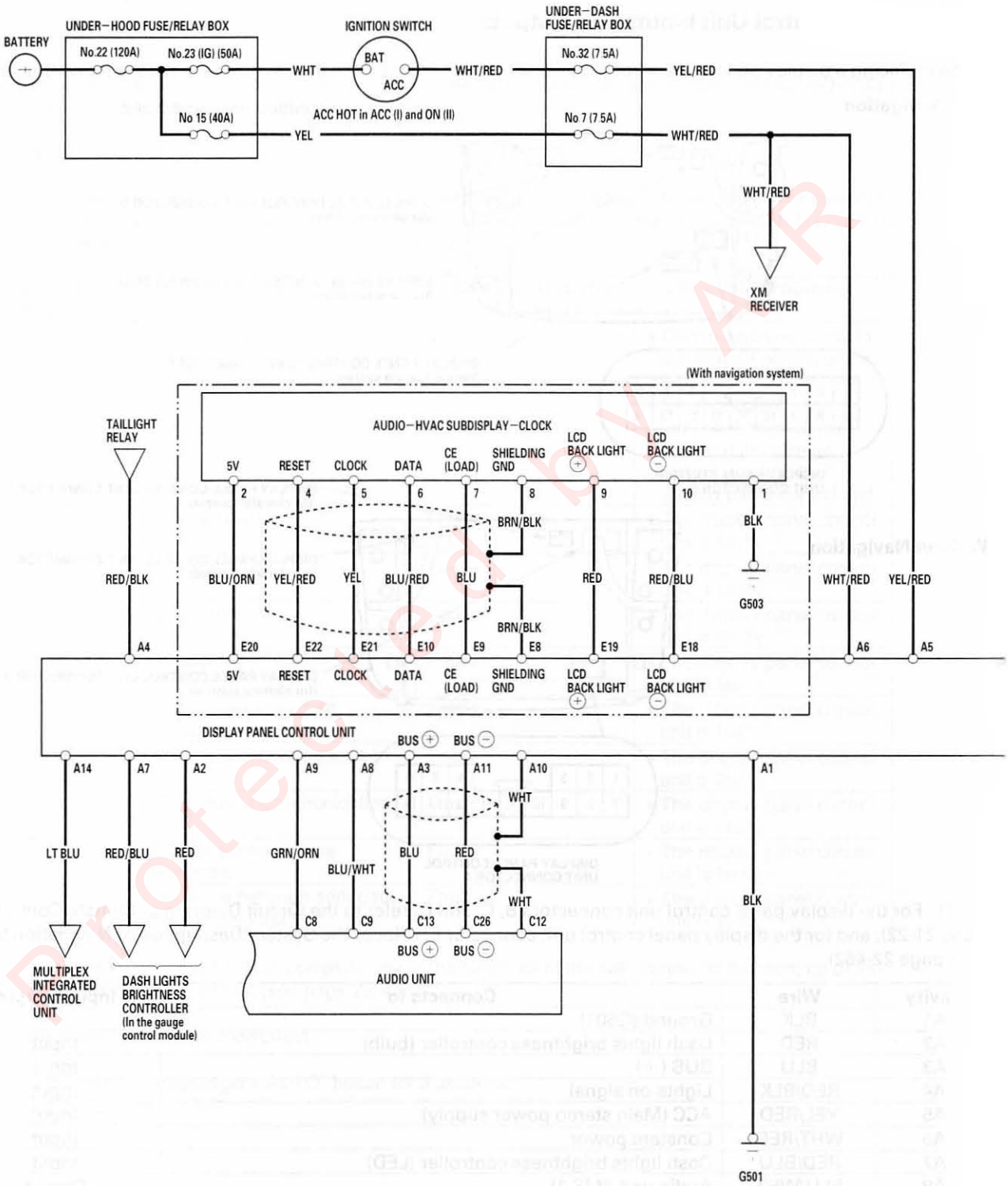

Protected by AR

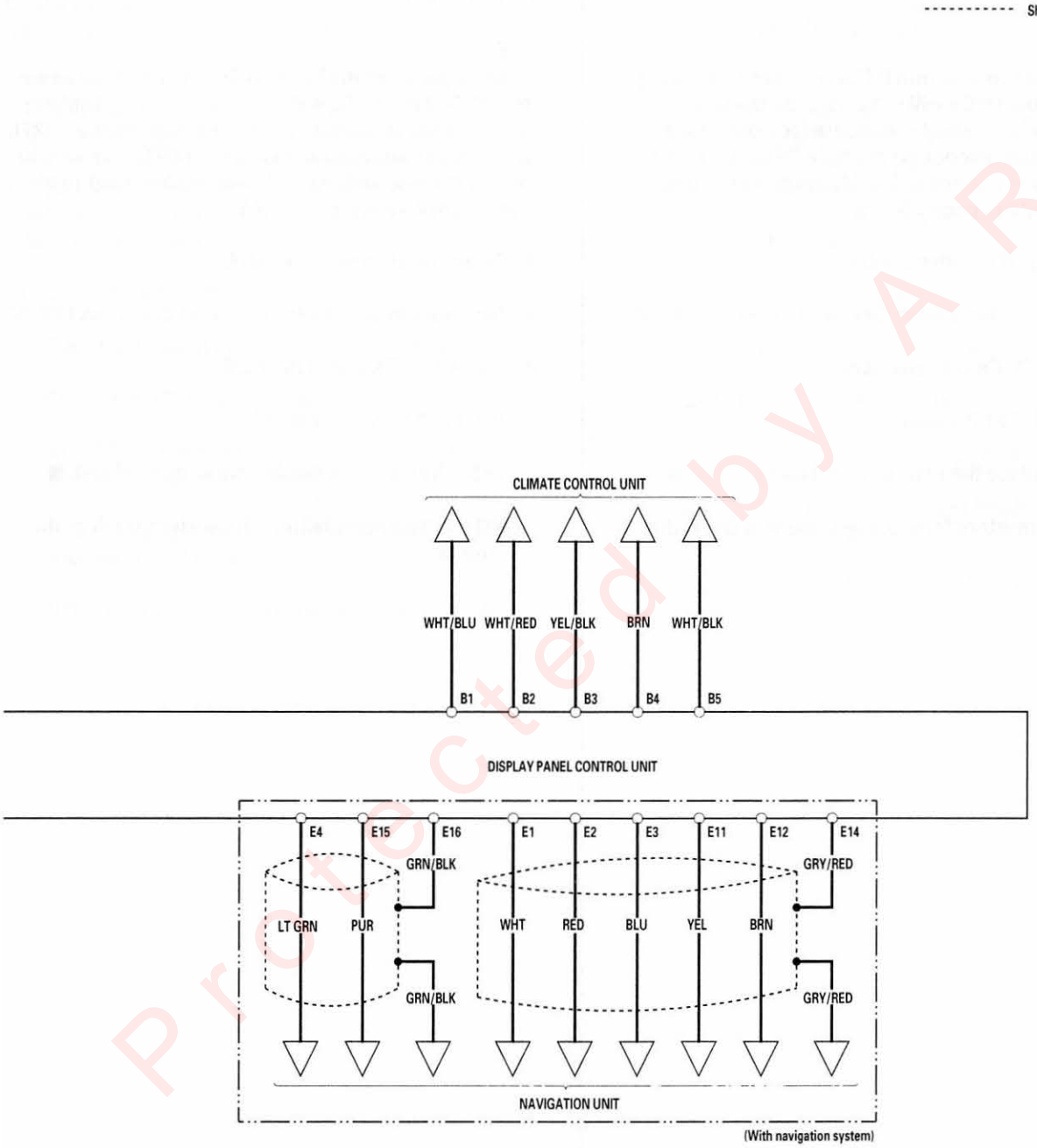

Protected by AR

DTC Troubleshooting

DTC B1701: Display Panel Control Unit CPU Error

NOTE:
- Display panel control unit DTCs may not clear using the HDS. If the DTCs will not clear, use the display panel control unit reset procedure (see page 22-427).
- If you are troubleshooting multiple DTCs, be sure to follow the instructions in B-CAN system diagnosis test mode A (see page 22-108).

1. Clear the DTCs with the HDS.
2. Turn the ignition switch OFF, and then back ON (II).
3. Check for DTCs with the HDS.

   Is DTC B1701 indicated?

   YES – Replace the display panel control unit. ■

   NO – Intermittent failure, the system is OK at this time. ■

DTC B1702: Display Panel Control Unit EEPROM Error

NOTE:
- Display panel control unit DTCs may not clear using the HDS. If the DTCs will not clear, use the display panel control unit reset procedure (see page 22-427).
- If you are troubleshooting multiple DTCs, be sure to follow the instructions in B-CAN system diagnosis test mode A (see page 22-108).

1. Clear the DTCs with the HDS.
2. Turn the ignition switch OFF, and then back ON (II).
3. Check for DTCs with the HDS.

   Is DTC B1702 indicated?

   YES – Replace the display panel control unit. ■

   NO – Intermittent failure, the system is OK at this time. ■

Protected by AR

DTC B1705: Display Panel Control Unit Lost Communication with the Gauge Control Module (Engine Temperature Signal)

NOTE:
- Display panel control unit DTCs may not clear using the HDS. If the DTCs will not clear, use the display panel control unit reset procedure (see page 22-427).
- If you are troubleshooting multiple DTCs, be sure to follow the instructions in B-CAN system diagnosis test mode A (see page 22-108).

1. Clear the DTC with the HDS.
2. Turn the ignition switch OFF, and then back ON (II).
3. Check for DTCs with the HDS.

   Are DTC B1008, B1011, B1060, B1061, B1805, and B1808 indicated?

   YES – Go to the Gauge Control Module Input Test (see page 22-134). ■

   NO – Replace the display panel control unit. ■

DTC B1706: Display Panel Control Unit Lost Communication with the Gauge Control Module (VSS/NE Signal)

NOTE:
- Display panel control unit DTCs may not clear using the HDS. If the DTCs will not clear, use the display panel control unit reset procedure (see page 22-427).
- If you are troubleshooting multiple DTCs, be sure to follow the instructions in B-CAN system diagnosis test mode A (see page 22-108).

1. Clear the DTC with the HDS.
2. Turn the ignition switch OFF, and then back ON (II).
3. Check for DTCs with the HDS.

   Are DTC B1011, B1060, and B1805 indicated?

   YES – Go to the Gauge Control Module Input Test (see page 22-134). ■

   NO – Replace the display panel control unit. ■

Protected by A R

DTC Troubleshooting (cont'd)

DTC B1725: Display Panel Control Unit Temperature is too high

NOTE:
- Display panel control unit DTCs may not clear using the HDS. If the DTCs will not clear, use the display panel control unit reset procedure (see page 22-427).
- If you are troubleshooting multiple DTCs, be sure to follow the instructions in B-CAN system diagnosis test mode A (see page 22-108).

1. Clear the DTC with the HDS.
2. Turn the ignition switch OFF, and then back ON (II).
3. Park the vehicle avoiding the direct sunlight and cool down the in-car temperature.
4. Check for DTCs with the HDS.

   Is DTC B1725 indicated?

   YES – Replace the center panel control unit. ■

   NO – Intermittent failure, the system is OK at this time. ■

Protected by AR

Display and Control Unit Input Test

NOTE: Before troubleshooting, do the B-CAN system test mode A (see page 22-108) and the display panel control unit self-diagnostic function test (see page 22-427).

1. Remove the audio-HVAC display module assembly (see page 22-437).

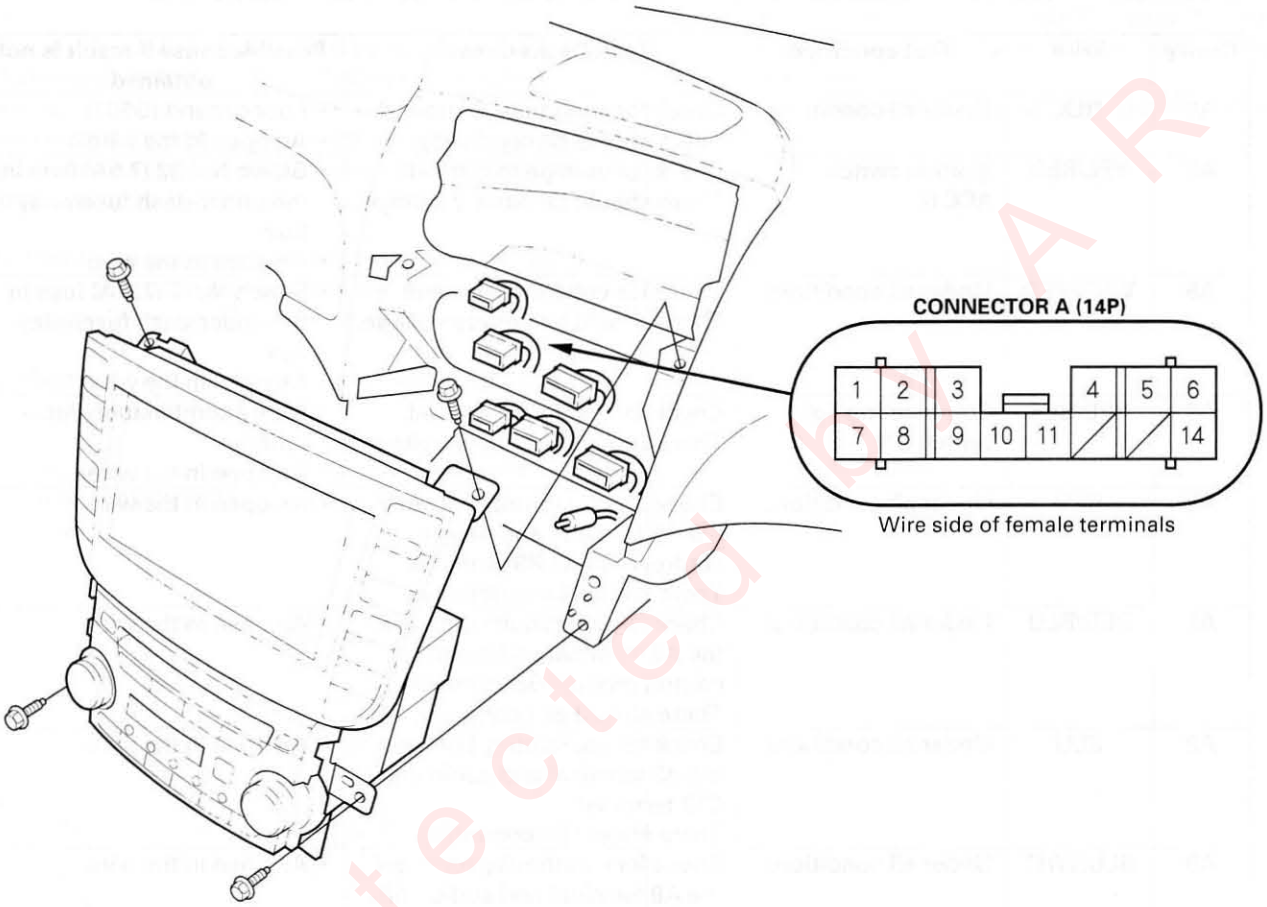

2. Inspect the connector and socket terminals to be sure they are all making good contact.
   - If the terminals are bent, loose or corroded, repair them as necessary, and recheck the system.
   - If the terminals look OK, go to step 3.

Protected by AR

(cont'd)

Display and Control Unit Input Test (cont'd)

3. With the connector still disconnected, make these input tests at the connector.

   - If any test indicates a problem, find and correct the cause, then recheck the system.
   - If all the input tests prove OK, go to navigation system (see page 22-462) and climate control (see page 21-8). If the navigation system and climate control system are OK, replace the display panel control unit.

Cavity	Wire	Test condition	Test: Desired result	Possible cause if result is not obtained
A1	BLK	Under all conditions	Check for continuity to ground: There should be continuity.	• Poor ground (G501) • An open in the wire
A5	YEL/RED	Ignition switch ACC (I)	Check for voltage to ground: There should be battery voltage.	• Blown No. 32 (7.5A) fuse in the under-dash fuse/relay box • An open in the wire
A6	WHT/RED	Under all conditions	Check for voltage to ground: There should be battery voltage.	• Blown No. 7 (7.5 A) fuse in the under-dash fuse/relay box • An open in the wire
A4	RED/BLK	Combination light switch ON	Check for voltage to ground: There should be battery voltage.	• Faulty combination light switch • An open in the wire
A2	RED	Under all conditions	Check for countinuity between the A2 terminal and gauge control module B9 terminal: There should be continuity.	• An open in the wire
A7	RED/BLU	Under all conditions	Check for countinuity between the A2 terminal and gauge control module B8 terminal: There should be continuity.	• An open in the wire
A3	BLU	Under all conditions	Check for countinuity between the A3 terminal and audio unit C13 terminal: There should be continuity.	• An open in the wire
A8	BLU/WHT	Under all conditions	Check for countinuity between the A8 terminal and audio unit C9 terminal: There should be continuity.	• An open in the wire
A9	GRN/ORN	Under all conditions	Check for countinuity between the A9 terminal and audio unit C8 terminal: There should be continuity.	• An open in the wire
A10	WHT	Under all conditions	Check for countinuity to ground: There should be continuity.	• An open in the wire
A11	RED	Under all conditions	Check for countinuity between the A11 terminal and audio unit C26 terminal: There should be continuity.	• An open in the wire

Protected by MP

Audio-HVAC Display Module Assembly Removal/Installation

SRS components are located in this area. Review the SRS component locations (see page 23-11), and the precautions and procedures (see page 23-13) before performing repairs or service.

NOTE:
- Put on gloves to protect your hands.
- Take care not to scratch the dashbord and related parts.
- Lay a workshop towel under the patrs when working on them to protect the face panel from scratches or other damage.

1. Make sure you have the anti-theft codes for the radio and navigation system, then write down the channels for the XM radio's preset buttons.

2. Remove the console trims (see page 20-77) and upper panel (see page 20-83).

3. Remove the screws and bolts, then pull out the audio-HAVC display module assembly (A).

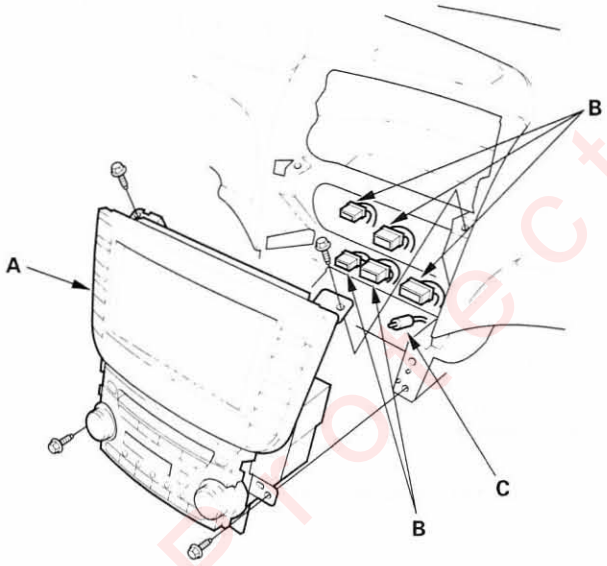

4. Disconnect the connectors (B) and antenna lead (C), then remove the audio-HVAC display module assembly.

5. Install the audio-HAVC display module assembly in the reverse order of removal, and note these items:

   - Make sure all connectors and antenna lead are secure.
   - Enter the anti-theft code for the radio, then enter the customer's XM radio channel presets, and set the clock.
   - If necessary, enter the navigation system code.

Protected by A R

Display Panel Control Unit Removal/Installation

1. Remove the audio-HAVC display module assembly (see page 22-437).

2. Remove the screws and bolts, then separate the audio unit (A) and display panel control unit (B).

   NOTE: To avoid the damage, remove the screws (C) first, then remove the bolts (D).

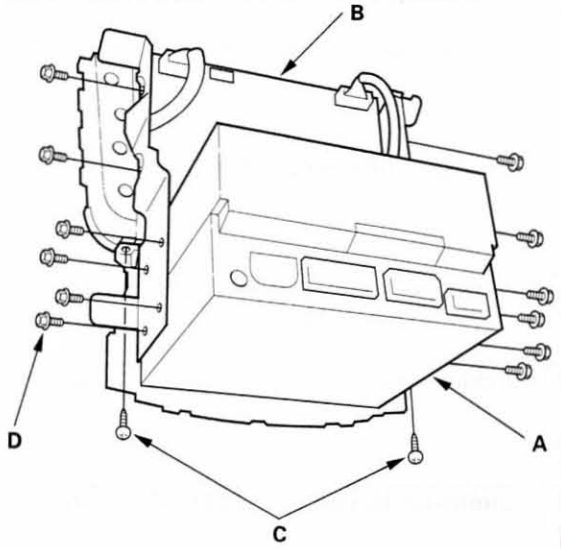

3. Install the audio unit to the display panel control unit in the reverse order of removal.

Protected by AR

Component Location Index

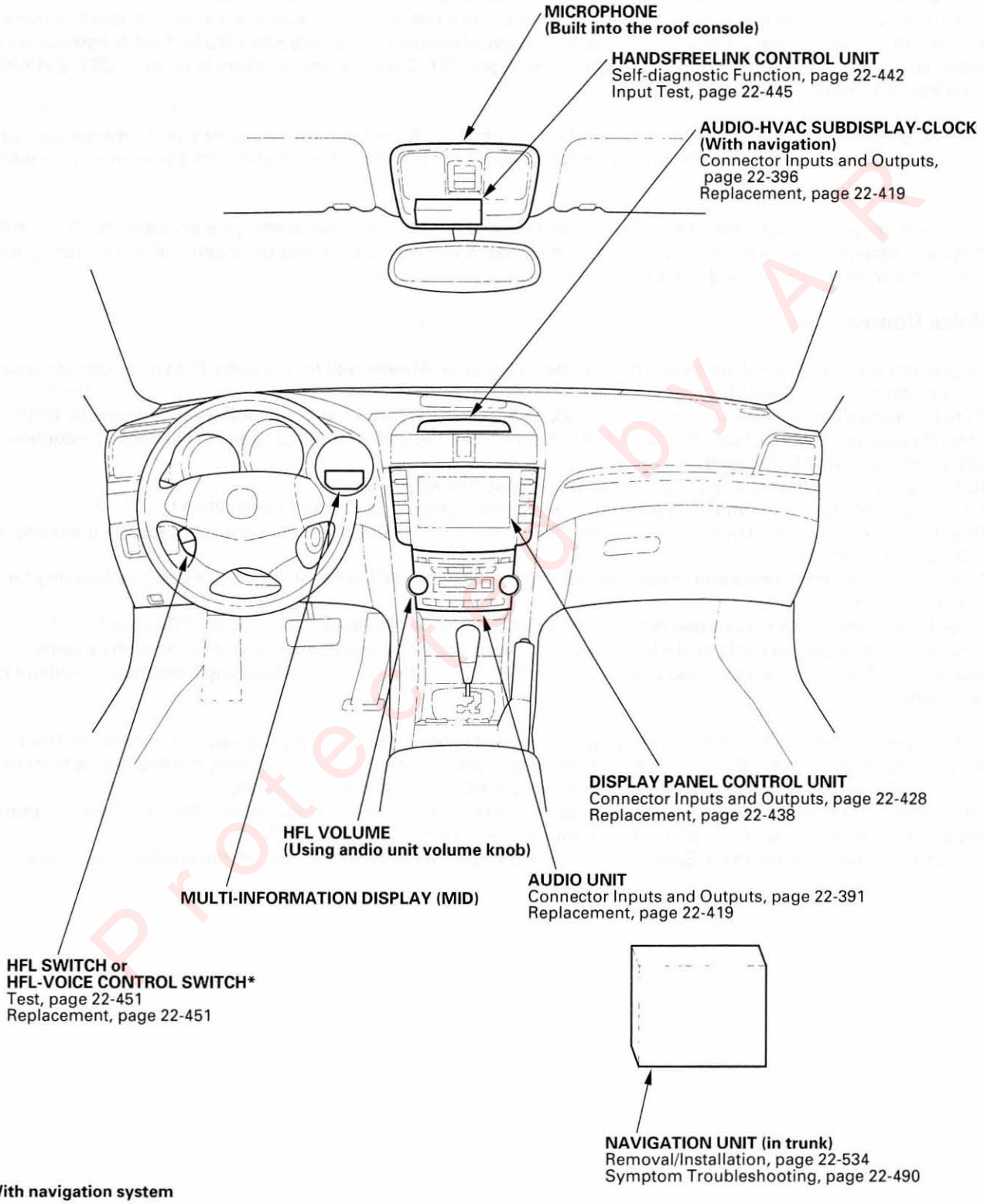

*: With navigation system

Protected by AR

General Troubleshooting Information

The HandsFreeLink (HFL) works only with Bluetooth enabled cell phones with the Hands Free Profile. If you are not sure if your cell phone is compatible with the HFL – and not all phones are – Acura has a dedicated call center and web-site to answer your questions on the web go to www.acura.com or dial 888-528-7876 for further assistance. The center is open Monday thru Friday from 6:00 am to 6:00 pm CST, Saturday from 7:00 am to 6:00 pm CST, and Sunday from 8:00 am to 6:00 pm CST.

The HFL gives the user the convenience of hands-free operation. It can't control the phone's performance (call quality and signal strength). To avoid performance problems, don't put the phones in a metal briefcase or in a purse under the seat.

This guide shows you just a few of the HFL's many features. You will see how to pair your phone to the HFL and then make and receive calls, all using simple voice commands. If you want a complete description of this system, please refer to the owner's manual and quick start guide.

Voice Control Tips

To give any voice command, press and release the Talk button. Always wait for the beep, then give your command in a clear, natural voice. The HFL microphone is on the ceiling, by the front spotlights.
If the HFL doesn't recognize your voice command, you'll hear "Pardon". If after repeating your command, it still doesn't recognize it, you'll hear "Please repeat". If after repeating your command again, it still doesn't recognize it, the HFL sends you to the Help menu.
To hear a list of available options at any time, say "Hands free help".
You can give many voice commands together. For example, you can say "Dial 123-456-7890".
To give a string of numbers in a call or dial voice command, you can say them all at once, or separate them into blocks of 3, 4, 7, 10, or 11.
To skip a voice prompt, press and release the Talk button while the HFL is speaking. The HFL begins listening for your next voice command.
To go back a step in a voice command sequence, press and release the Back button, or say "Go back".
If you don't say anything while the HFL is listening for your voice command, it will time out and stop its voice recognition. The next time you press and release the Talk button, the HFL begins listening from the point where it timed out.

To stop a voice command sequence at any time, press and hold the Back button, or press and release the Talk button, wait for the beep, and say "Cancel". The next time you press and release the Talk button, the HFL begins from its main menu. You'll see MAIN on the multi-information display (MID) in the instrument panel.
When you're done with a voice command sequence, the HFL goes back to its main menu. The next time you press and release the Talk button, you'll be at the main menu and you'll see MAIN on the MID.
Remember to press and hold the Back button until you exit the main menu, otherwise, the audio system stays muted.

Processed by AR

Pairing Your Cell Phone (A One Time Procedure)

You must pair a Bluetooth compatible the phone to the HFL before you can make and receive calls. The following steps show you what you need to do. For specific pairing instructions on the web go to www.acura.com or contact Acura's call center at 888-528-7876. You can also refer to the phone's operating manual or call the phone retailer. Make sure the vehicle is stationary when you pair the phone;

NOTE:
- You cannot pair a phone if the vehicle is moving.
- Your phone must be in its Discovery mode.
- Up to six Bluetooth compatible phones can be paired by the HFL.

1. Turn on your phone, and follow the prompts to activate Bluetooth.
2. Give these voice commands to the HFL by pressing the talk button.

You say	You'll hear
"Phone setup"	"Phone setup options are status, pair, edit, delete, and list."
"Pair"	"The pairing process requires operation of your mobile phone. For safety, only perform this function while the vehicle is stopped. State a four-digit code for pairing. Note this code, it will be requested by the phone."
"1. 2. 3. 4." (This can be any four-digit code you want.)	"1. 2. 3. 4. is this correct?"
"Yes"	"Searching for a Bluetooth phone. Make sure the phone you are trying to pair is in Discovery mode ! "

3. Follow the call phone manufucture's instructions to put the phone in its Discovery mode. The phone will search for the HFL. When you see HANDSFREELINK in the device list on the phone, select it.
4. When prompted, enter the four-digit PIN from step 2 into the phone. You will hear the HFL say "A new phone has been found. Would you like to name this phone?"
5. Press and release the Talk button, and say what the phone name will be. For example, say "John's phone". You'll hear "John's phone has been successfully paired". Returning to the main menu. "# When the phone is paired to the HFL, you'll also see a phone icon in the subdisplay in the dashboard."
6. To pair another phone, repeat step 1 thru 5.

(cont'd)

General Troubleshooting Information (cont'd)

Self-diagnostic Fanction

NOTE: This procedure should be used only if HDS is unavailable.

To run the self-diagnostic function, do the following:

1. Turn the ignition switch ACC (I).
2. Press and hold the HFL-switch or HFL-voice control switch "HFL BACK" button for more than 5 seconds.
3. When the HandsFreeLink system enters the self-diagnostic function, the word "DIAGNOSTIC MODE" is displayed on the multi-infomation display (MID) on the gauge control module.
   - If the system has not completed testing for DTCs, the HandsFreeLink control unit audibly outputs "The hands free system test is in progress".
   - If there is no DTC, the HandsFreeLink control unit audibly outputs "The hands free system is OK".
   - If there is any DTC, the HandsFreeLink control unit audibly outputs "The hands free system needs to be serviced".

NOTE:
- The self-diagnostic function can only be initiated while the HFL is in its idle state.
- The self-diagnostic function is considered to start once the 5 seconds press and hold is detected, and ends when the units returns to idle state.

Exiting the Self-diagnotic Mode

Press the HFL BACK button and exit the self-diagnostic mode.

Symptom Troubleshooting

Response	Problem area	
Nothing happens	Switch failure, harness failure (HFL-voice control switch, Switch ground, HFL power (ACC, +B, ground)) or Combinations of harness failure (HFL mute, HFL Audio, B-CAN), Audio unit failure, Gauge control module faiure	Use the HDS to check for DTCs.
MID changes, but radio continues to play.	Harness failure (HFL mute), Audio unit failure	
MID changes and radio mute, but no audio prompt.	Harness failure (HFL Audio+, HFL Audio−), Audio unit failure	
Audio prompt plays, but no MID change.	Harness failure (B-CAN), Gauge control module failure	
All system responses occur but the prompt is "The system is no good".	Harness failure (MIC In+, MIC In−, MIC Out+, MIC Out−), a DTC remains set from history	

Protected by AR

Circuit Diagram

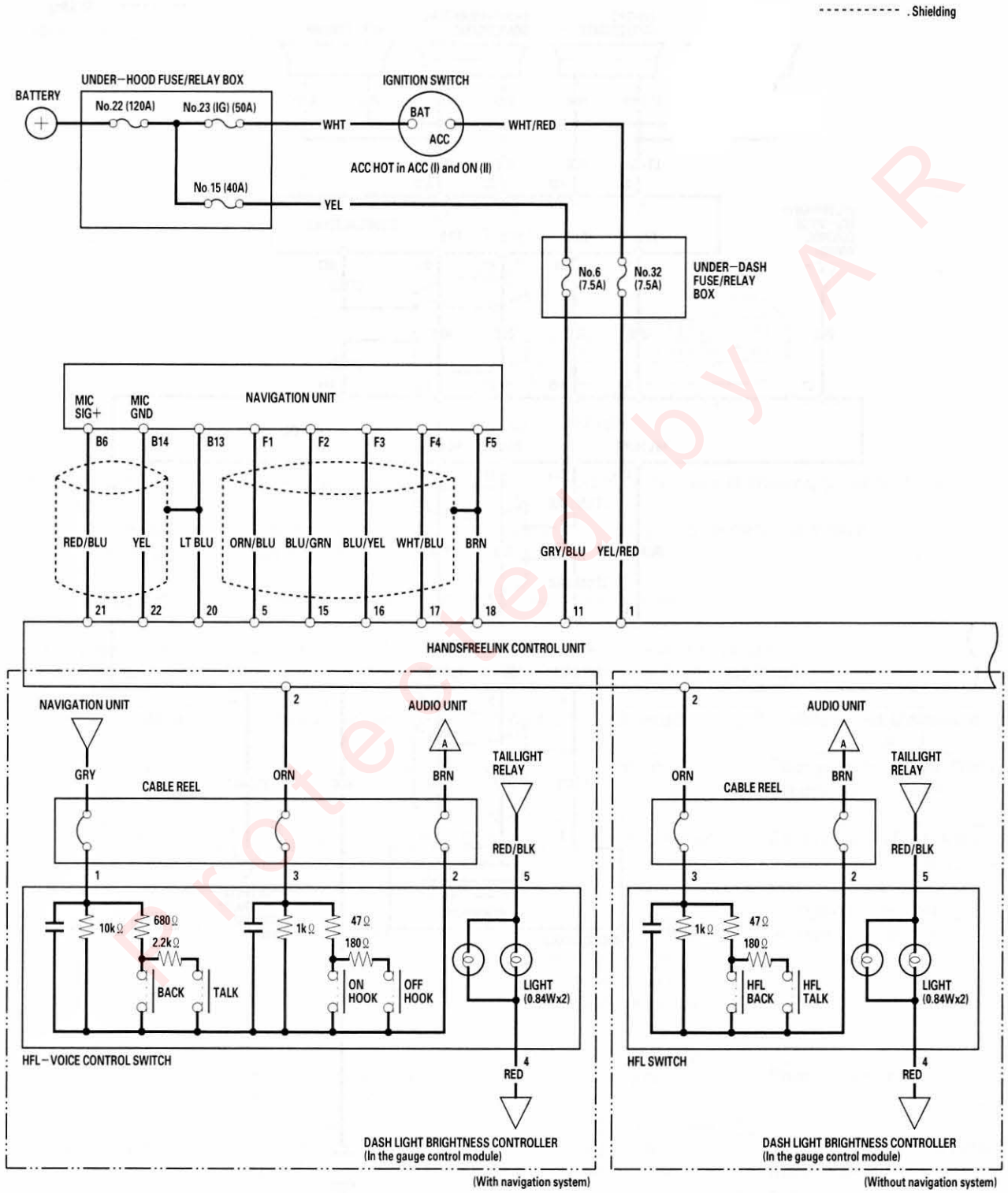

Protected by AR

(cont'd)

Circuit Diagram (cont'd)

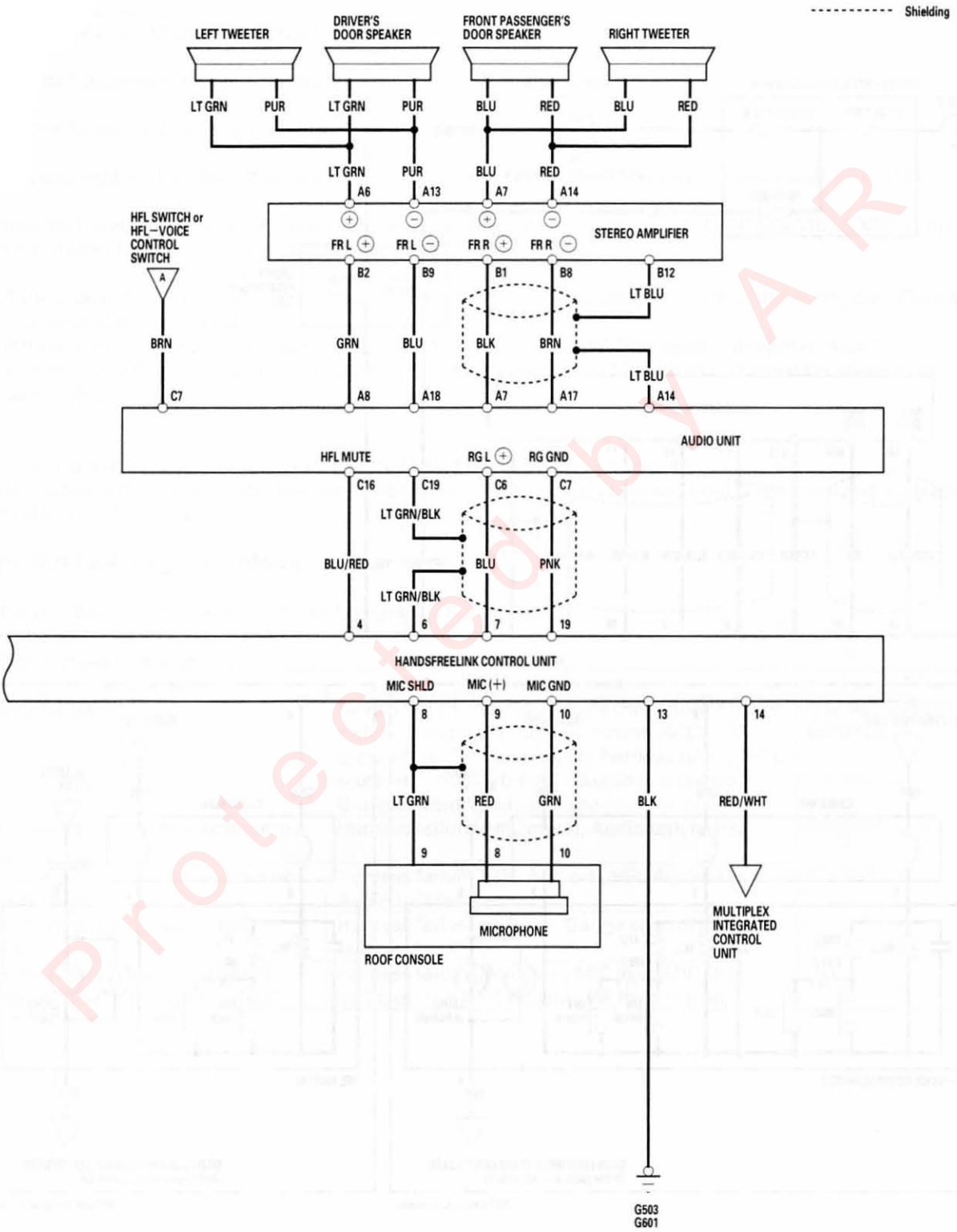

Protected by AR

Control Unit Input Test

1. Remove the roof console (see page 22-206).

2. Disconect the 22P connector (A) from the HandsFreeLink control unit (B).

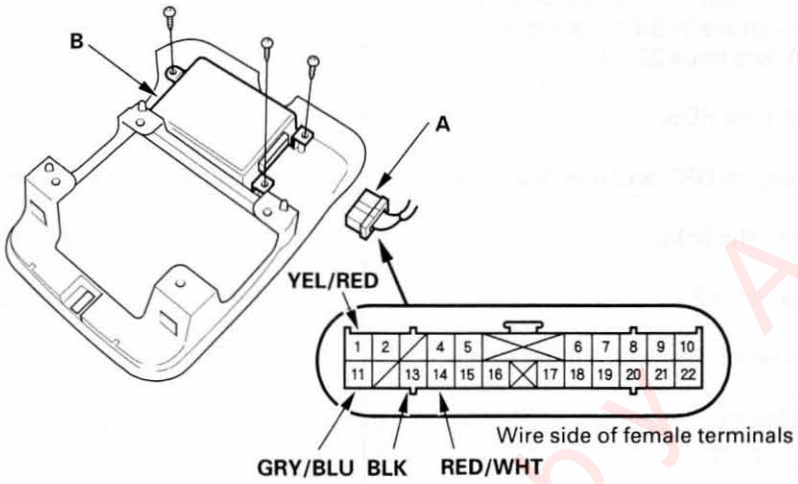

3. Inspect the connector and socket terminals for a good pinfit to be sure they are all making good contact.

   - If the terminals are bent, loose or corroded, repair them as necessary, and recheck the system.
   - If the terminals look OK, go to step 4.

4. With the connector still disconnected, make these input tests at the connector.

   - If any test indicates a problem, find and correct the cause, then recheck the system.
   - If all the input tests prove OK, the HandsFreeLink control unit must be faulty; replace it.

Cavity	Wire	Test condition	Test: Desired result	Possible cause if result is not obtained
13	BLK	Under all conditions	Check for continuity to ground: There should be continuity.	• Poor ground (G503, G601) • An open in the wire
11	GRY/BLU	Under all conditions	Check for voltage to ground: There should be battery voltage.	• Blown No. 6 (7.5A) fuse in the under-dash fuse/relay box • An open in the wire
14	RED/WHT	Under all conditions	Check for continuity between No. 14 terminal and the under-dash fuse/relay box connector X (39P) terminal No. 18: There should be continuity.	• An open in the wire
		Under dash fuse relay box connector X (39P) disconnected	Check for continuity to ground: There should be no continuity.	• Short to ground
1	YEL/RED	Ignition switch ACC (I) or ON (II)	Check for voltage to ground: There should be battery voltage.	• Blown No. 32 (7.5A) fuse in the under-dash fuse/relay box • An open in the wire

Protected by AR

DTC Troubleshooting

DTC B1751: HandsFreeLink Control Unit CPU Error (Anomalous CPU)

NOTE: If you are troubleshooting multiple DTCs, be sure to follow the instructions in B-CAN system diagnosis test mode A (see page 22-108).

1. Clear the DTCs with the HDS.
2. Turn the ignition switch OFF, and then back ON (II).
3. Check for DTCs with the HDS.

   Is DTC B1751 indicated?

   YES – Replace the HandsFreeLink control unit. ■

   NO – Intermittent failure, the system is OK at this time. ■

Protected by AR

DTC B1775: Microphone Input/Output Short to Power/Open

NOTE: If you are troubleshooting multiple DTCs, be sure to follow the instructions in B-CAN system diagnosis test mode A (see page 22-108).

1. Clear the DTCs with the HDS.
2. Turn the ignition switch OFF, and then back ON (II).
3. Check for DTCs with the HDS.

   Is DTC B1775 indicated?

   YES – Go to step 4.

   NO – Intermittent failure, the system is OK at this time. ■
4. Turn the ignition switch OFF.
5. Remove the roof console (see page 22-206).
6. Disconnect the 20P connector from the roof console and 22P connector from the HandsFreeLink control unit.
7. Turn the ignition switch ON (II).
8. Check for voltage between the HandsFreeLink control unit 22P connector terminal No. 9 and body ground.

HANDSFREELINK CONTROL UNIT CONNECTOR (22P)

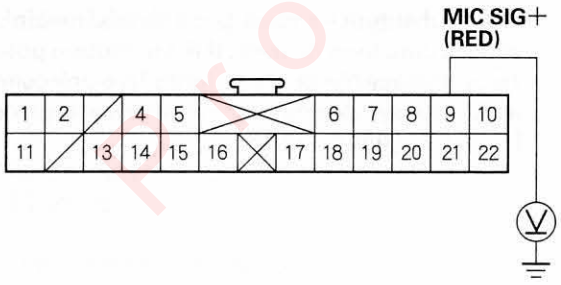

Wire side of female terminals

Is there battery voltage?

YES – Replace shielded harness. ■

NO – Go to step 9.

9. Turn the ignition switch OFF.
10. Check for continuity between the HandsFreeLink control unit 22P connector terminal No. 9 and roof console 20P connector terminal No. 8.

HANDSFREELINK CONTROL UNIT CONNECTOR (22P)

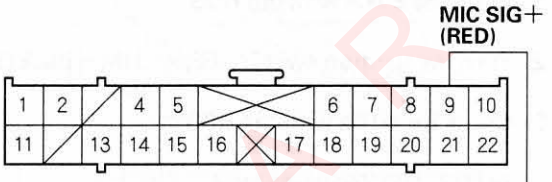

Wire side of female terminals

ROOF CONSOLE CONNECTOR (20P)

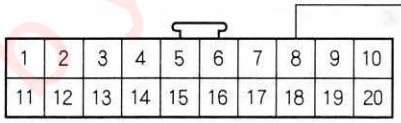

Wire side of female terminals

Is there continuity?

YES – Substitute a known-good HandsFreeLink control unit, then recheck. If the symptom goes away, replace the original HandsFreeLink control unit. ■

NO – Replace the shielded harness. ■

Protected by ARR

DTC Troubleshooting (cont'd)

DTC B1776: Microphone Input/Output Short to Ground/Open

NOTE: If you are troubleshooting multiple DTCs, be sure to follow the instructions in B-CAN system diagnosis test mode A (see page 22-108).

1. Clear the DTCs with the HDS.
2. Turn the ignition switch OFF, and then back ON (II).
3. Check for DTCs with the HDS.

   Is DTC B1776 indicated?

   YES – Go to step 4.

   NO – Intermittent failure, the system is OK at this time. ■
4. Turn the ignition switch OFF.
5. Remove the roof console (see page 22-206).
6. Disconnect the 22P connector from the HandsFreeLink control unit.
7. Check for continuity between the HandsFreeLink control unit 22P connector terminal No. 10 and body ground, then between No. 8 and No. 9.

HANDSFREELINK CONTROL UNIT CONNECTOR (22P)

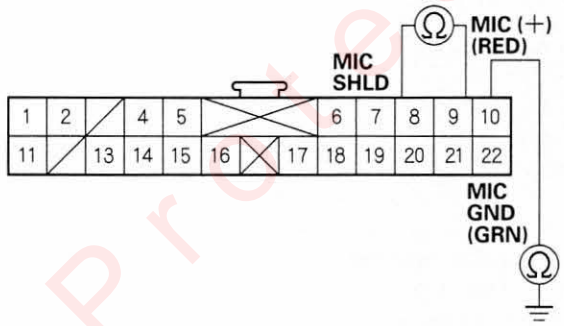

Wire side of female terminals

Is there continuity?

YES – Replace the shielded harness. ■

NO – Go to step 8.

8. Check the vehicle's trim level.

   Is the vehicle navigation system equipped?

   YES – Go to step 9.

   NO – Substitute a known-good HandsFreeLink control unit, then recheck. If the symptom goes away, replace the original HandsFreeLink control unit. ■
9. Disconnect the 14P connector from the navigation unit.
10. Check for continuity between the HandsFreeLink control unit 22P connector terminal No. 22 and body ground, then between No. 20 and No. 21.

HANDSFREELINK CONTROL UNIT CONNECTOR (22P)

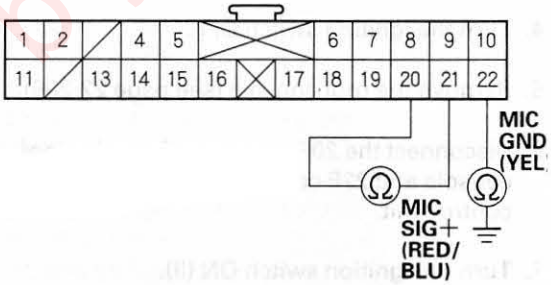

Wire side of female terminals

Is there continuity?

YES – Replace the shielded harness. ■

NO – Substitute a known-good HandsFreeLink control unit, then recheck. If the symptom goes away, replace the original HandsFreeLink control unit. If the symptom does not go away, replace the faulty navigation unit. ■

Protected by AR

DTC B1779: HFL Switch or HFL-Voice Control Switch* (HFL TALK/HFL BACK Buttons) Open/Short

NOTE:
- If you are troubleshooting multiple DTCs, be sure to follow the instructions in B-CAN system diagnosis test mode A (see page 22-108).
- Information marked with an asterisk (*) applies to the switch with navigation system.

1. Clear the DTCs with the HDS.

2. Turn the ignition switch OFF, then start the vehicle and turn the steering wheel back and forth several times.

3. Check for DTCs with the HDS.

   Is DTC B1779 indicated?

   YES – Go to step 4.
   NO – Intermittent failure, the system is OK at this time. ■

4. Turn the ignition switch OFF.

5. Do the HFL switch or HFL-voice control switch* test (see page 22-451).

   Is the switch OK?

   YES – Go to step 6.
   NO – Replace the HFL switch or HFL-voice control switch* (see page 22-451). ■

6. Remove the roof console (see page 22-206).

7. Disconnect the 22P connector from the HandsFreeLink control unit.

8. Disconnect the 5P connector from the HFL switch or HFL-voice control switch*.

9. Turn the ignition switch ON (II).

10. Check for voltage on HFL switch connector terminal 3.

    Is there voltage?

    YES – Repair short to power on ORN wire.
    NO – Go to step 11.

11. Check for continuity between the HandsFreeLink control unit 22P connector terminal No. 2 and HFL switch or HFL-voice control switch* 5P connector terminal No. 3.

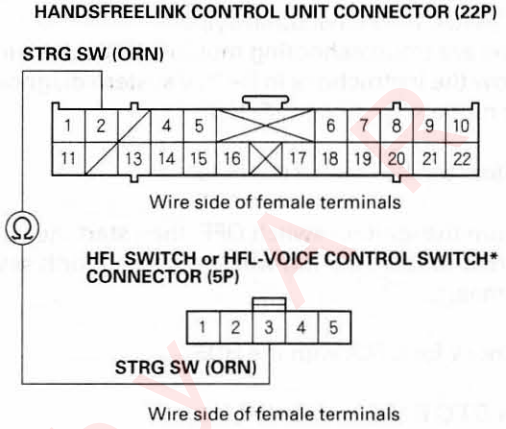

Is there continuity?

YES – Go to step 12.
NO – Repair an open in the ORN wire between the switch, cable reel and HFL unit. ■

12. Check for continuity between the HFL or HFL-voice control switch 5P connector No. 2 terminal and the audio unit connector C (26P).

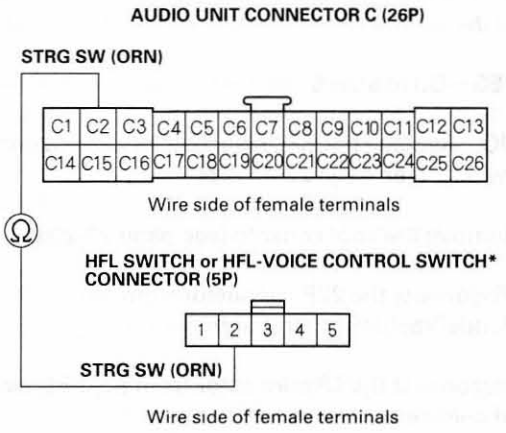

Is there continuity?

YES – Check for loose or poor connections at the audio unit, HFL control unit and HFL switch or HFL-voice control switch. If the connections are OK, substitute a known-good HFL control unit. If the problem is gone, replace the original control unit.
NO – Repair open in the wire between the switch, cable reel, and the audio unit. ■

Protected by AP

DTC Troubleshooting (cont'd)

DTC B1780: HFL Switch or HFL-Voice Control Switch* (HFL TALK/HFL BACK Buttons) Short

NOTE:
- Information marked with an asterisk (*) applies to the switch with navigation system.
- If you are troubleshooting multiple DTCs, be sure to follow the instructions in B-CAN system diagnosis test mode A (see page 22-108).

1. Clear the DTCs with the HDS.
2. Turn the ignition switch OFF, then start the vehicle and turn the steering wheel back and forth several times.
3. Check for DTCs with the HDS.

   Is DTC B1780 indicated?

   YES – Go to step 4.

   NO – Intermittent failure, the system is OK at this time. ■
4. Turn the ignition switch OFF.
5. Do the HFL switch or HFL-voice control switch* test (see page 22-451).

   Is the switch OK?

   YES – Go to step 6.

   NO – Replace the HFL switch or HFL-voice control switch* (see page 22-451). ■
6. Remove the roof console (see page 22-206).
7. Disconnect the 22P connector from the HandsFreeLink control unit.
8. Disconnect the 5P connector from the HFL switch or HFL-voice control switch*.
9. Turn the ignition switch OFF.
10. Check for continuity between the HandsFreeLink control unit 22P connector terminal No. 2 and body ground.

HANDSFREELINK CONTROL UNIT CONNECTOR (22P)

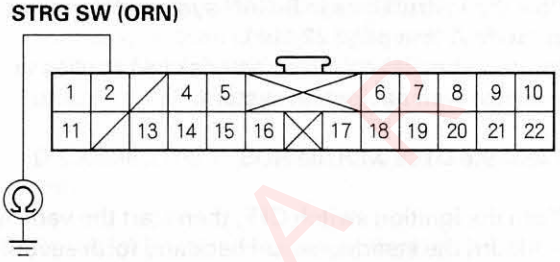

Wire side of female terminals

Is there continuity?

YES – Repair short in the wire. ■

NO – Replace the HandsFreeLink control unit. ■

Protected by A

DTC B1792: HandsFreeLink Control Unit Internal Error

1. Clear the DTCs with the HDS.
2. Turn the ignition switch OFF, and then back ON (II).
3. Check for DTCs with the HDS.

   Is DTC B1792 indicated?

   YES – Replace the HandsFreeLink control unit. ■

   NO – Intermittent failure, the system is OK at this time. ■

HFL Switch/HFL-Voice Control Switch Test/Replacement

NOTE: Information marked with asterisk (*) applies to the switch with navigation system.

1. Remove the driver's airbag (see page 23-128).
2. Disconnect the 5P connector (A).

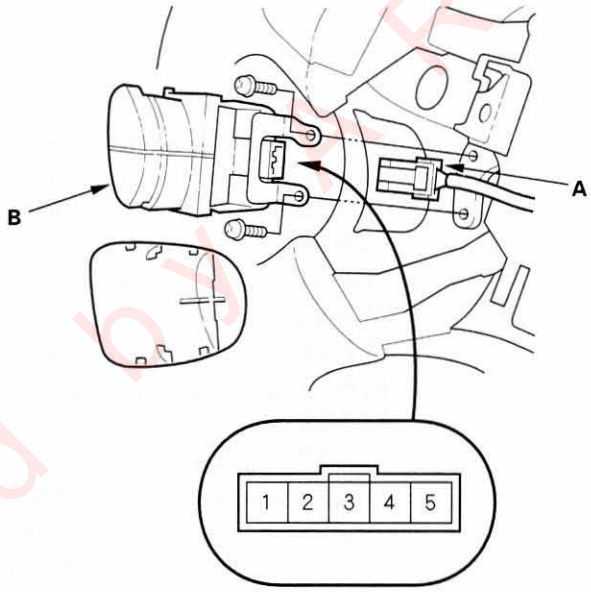

3. Remove the two screws and HFL switch or HFL-voice control switch* (B).
4. Measure resistance between the No. 3 and No. 2 terminals in each switch position according to the table.

HFL Switch

Position	Resistance
OFF	About 1 kΩ
HFL Talk button pressed	About 187 kΩ
HFL Back button pressed	About 45 kΩ

Navigation Voice Control Switch

Position	Resistance
OFF	About 10 kΩ
Talk button pressed	About 3.2 kΩ
Back button pressed	About 1.6 kΩ

5. If the resistance is not as specified, replace the switch.

Protected by

Navigation System

Special Tools 22-454
Component Location Index 22-455
General Troubleshooting Information 22-456
Symptom Troubleshooting Index 22-460
System Description 22-462
Circuit Diagram 22-486
Symptom Troubleshooting 22-490
System Diagnosis Mode 22-514
Forced Starting of Display 22-533
DVD-ROM Replacement 22-533
Navigation Unit Removal/Installation 22-534
GPS Antenna Removal/Installation 22-534
HFL Switch/HFL-Voice Control Switch Test/Replacement 22-451
Display Panel Control Unit Removal/Installation 22-438

Protected by A.R

Special Tools

Ref. No.	Tool Number	Description	Qty
①	07PAZ-0010100	SCS Service Connector	1

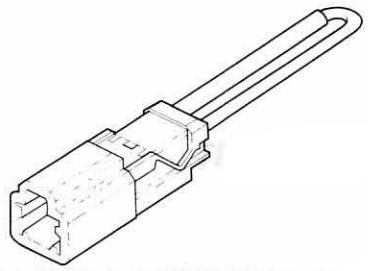

①

Protected by A R

Component Location Index

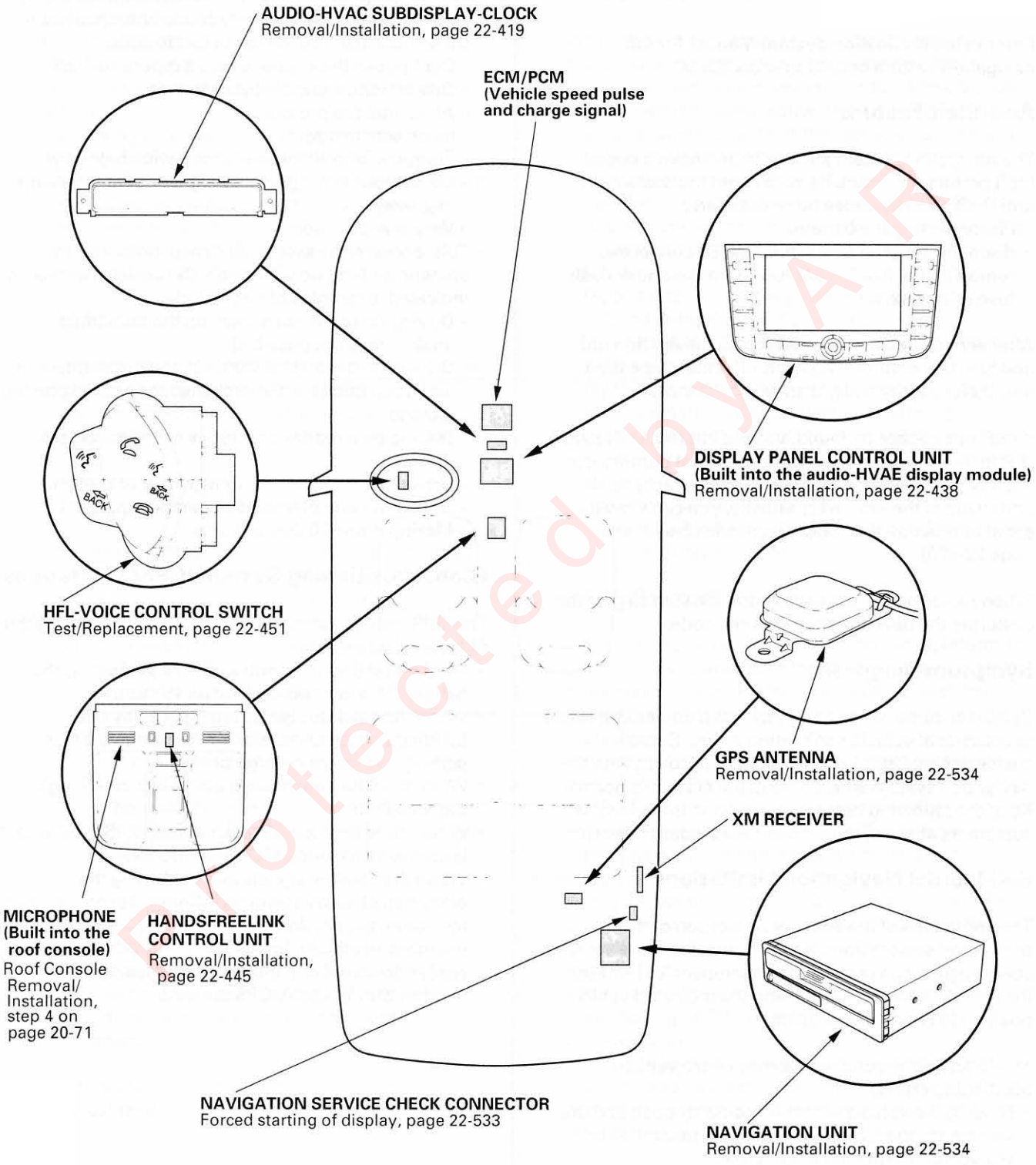

Protected by AR

General Troubleshooting Information

General Operation

Refer to the Navigation System Manual for the navigation system operating procedures.

Anti-theft Feature

The navigation system and audio unit have a coded theft protection circuit. Be sure to get the customer's anti-theft security codes number before;

- disconnecting the battery.
- disconnecting the navigation unit 8P connector.
- removing the No. 7 (10A) fuse from the under-dash fuse/relay box.

After service, reconnect power to the navigation unit, and turn the ignition switch ON (II). Enter the 4-digit anti-theft security code, then select "Done".

If the code cannot be found, use the interactive Network (*i*N) to look it up. You will need the serial number from the navigation unit in the trunk. It is on a label on the underside of the unit. Alternatively, you can view the serial number in Navi ECU diagnostic screen (see page 22-520).

When replacing the navigation unit, be sure to give the customer the new anti-theft security code.

Symptom Diagnosis

Certain circumstances and system limitations will result in occasional vehicle positioning errors. Some customers may think this indicates a problem with the navigation system when, in fact, the system is normal. Keep the following items in mind when interviewing customers about symptoms of the navigation system.

Self-Inertial Navigation Limitations

The limitations of the self-inertial portion of the navigation system (the yaw rate sensor and the vehicle speed signal) can cause some discrepancies between the vehicle's actual position and the indicated vehicle position (GPS vehicle position).

The following circumstances may cause vehicle positioning errors:

- Moving the vehicle with the engine stopped and the vehicle stopped, such as by ferry or tow truck, or if the vehicle is spun on a turn table.
- Tire slippage, changes in tire rolling diameters, and some driving situations may cause discrepancies in travel distances. Examples of this include:
  - Continuous tire slippage on a slippery surface
  - Driving with snow chains mounted
  - Abnormal tire pressure
  - Incorrect tire size
  - Frequent lane changes across a wide highway
  - Continuous driving on a straight or gently curving highway
  - Very bumpy roads
- Tolerances in the system and map inaccuracies sometimes limit how precisely the vehicle position is indicated. Examples of this include:
  - Driving on roads not shown on the map (map matching is not possible)
  - Driving on a road that winds in one direction, such as a loop bridge, an interchange, or a spiral parking garage
  - Driving on a road with a series of sharp hair-pin turns
  - Driving near a gradual highway exit or transition
  - Driving on one of two close parallel roads
  - Making many 90 degree turns

Global Positioning System (GPS) Limitations

The GPS cannot detect the vehicle's position during the following instances:

- For the first 5 to 10 minutes after reconnecting the battery (This can take as long as 45 minutes).
- When the satellite signals are blocked by tall buildings, mountains, tunnels, large trees, inside parking structures or large trucks.
- When the GPS antenna is blocked by something on the rear shelf.
- When there is no satellite signal output (Signal output is sometimes stopped for satellite servicing).
- When the satellite signals are blocked by the operation of some electronic aftermarket accessories including, but not limited to non-OEM in-dash entertainment units (radio, CD players/changers, reader detectors and theft recovery systems) and window tinting above GPS antenna.

Protected by R

The accuracy of GPS is reduced during these instances:
- When only two satellite signals can be received (Three satellite signals are required for accurate positioning).
- When the satellite control centers are experiencing problems.
- When driving near high tension power lines.
- When the satellite signals are blocked by the operation of some electronic aftermarket accessories including, but not limited to non-OEM in-dash entertainment units (radio, CD players/changers, reader detectors and theft recovery systems) and window tinting above the GPS antenna.

Muting Logic

Whenever the navigation system is giving guidance, all of the speakers are muted. When the voice control system is being used, all of the speakers are muted. If the HandsFreeLink is in use, the voice control system is unavailable.

LCD Display Unit Limitations

- In cold temperatures, the display may stay dark for the first 2 or 3 minutes until it warms up.
- When the display is too hot because of direct summer sunlight, it will remain dark until the temperature drops (You may see an error message displayed stating this fact).
- When the humidity is high and the interior temperature is low, the display may appear cloudy. The display will clear up after some use.
- Fingerprints on the touch panel may sometimes be noticeable because of the panel's low-reflection coating. When cleaning the panel, wipe it gently with a soft cloth. To avoid scratching the panel, do not rub too hard, or use abrasive cleaners or shop towels.
- The touch panel consists of a touch sensitive resistive memberance covering the display. Unlike previous systems, you must actually "touch" the display to activate it. Never use hard or sharp implements to operate the screen because you risk damaging the sensing membrane. If a touch "switch" dose not function immediately, shift your finger slightly, and touch it again.

Note: The display is unaffected by sunlight, as in previous idsplays.

Symptom Duplication

- When the symptom can be duplicated, verify that it is not a characteristic of the system. Review the navigation manual and compare it to a known-good vehicle (with the same software and database), under the same conditions. If not the same, follow the self-diagnostic procedures and the appropriate troubleshooting procedures.
- When the symptom does not reappear or only reappears intermittently, ask the customer about the conditions when the symptom occured.
  - Ask the customer to demonstrate the problem.
  - Try to establish possible user error or misunderstanding of the system.
  - Try to establish if outside interference may have been the cause.
  - Try to duplication the symptom under the same conditions the customer was experiencing.
  - Vibration, temperature extremes, and moisture (dew, humidity) are factors that are difficult to duplicate.
  - Inspect the vehicle for after-market electronic devices (vehicle locators, amps, radar detectors, etc) that may be hidden.

Service Precautions

- If the navigaiton unit needs to be replaced, inform the customer that personal information in the navigaiton system will be lost. If possible, have the customer record their personal information before the unit is replaced.
- Before disconnecting the battery, make sure you have the anti-theft codes for the radio and the navigation system, and write down the XM radio channel presets. Also obtain any PGM-FI or transmission DTCs and freeze frame date (which will be lost when the PCM loses power).
- When the battery is disconnected, the internal GPS clock is reset to "0:00". The clock will reset to the correct time after the system finishes GPS initialization.
- After reconnecting the battery, you have to wait to get the initial signal from the satellite. It will take from 10 to 45 minutes.
- Before returning the vehicle to the customer, enter the radio and navigation anti-theft security code, then enter the customer's XM radio channel presets, and set the clock.

(cont'd)

General Troubleshooting Information (cont'd)

System Initialization

If for any reason, you lose power to the navigation system (like the battery was disconnected). The navigation system will require initialization. Once completed, your system will be ready to use.

This initialization requires the following:
- Entry of the 4-digit anti-theft security code to "unlock" the system
- GPS initialization (may not be needed depending of the length of time the system was without power)
- Map matching to align the GPS to a location on the map

Entering Security Code

The navigation system and audio unit have a coded theft protection cicuit. Be sure to get the customer's anti-theft security codes number before;
- disconnecting the battery
- disconnecting the navigation unit 8P connector
- removing the No. 7 (10A) fuse from the under-dash fuse/relay box

After service, reconnect power to the navigation unit, and turn the ignition switch ON (II). Enter the 4-digit anti-theft security code, then select "Done".

When replacing the navigation unit or radio, be sure to give the customer the new anti-theft security code.

GPS initialization

Depending on the length of time the battery was disconnected, your system may require GPS initialization. If it does, the following screen appears:

*****Wait*****
The system is acquiring its GPS signal.
This could take up to 10 minutes.
• Engine must be running
• Vehicle must be parked outside, away from buildings
• Do not move the vehicle at this time

If this procedure is not necessary the system proceeds directly to the Disclaimer screen. During initialization, the system searches for all available GPS satellites, and obtains their orbital information. During this procedure the vehicle should be out in the open with a clear view of the sky.

If the navigation system finds the satellites properly, this box clears, and changes to the Disclaimer screen. If within 10 minutes the system fails to locate a sufficient number of satellites to locate your position, the following screen appears.

Navigation system is unable acquire a proper GPS signal.
• Move vehicle to another location
• Turn the ignition switch off
• Disconnect the battery for 30 minutes to clear the GPS receiver's memory
• Reconnect the battery and follow the screen prompts

After 30 minutes with this screen displayed, turn off the engine, then restart the vehicle. If you now see the Disclaimer screen, the GPS initialization is complete.

NOTE:
- The average acquiring time is less than 10 minutes, but it can take as long as 45 minutes.
- If the system is still unable to acquire a signal, follow the instructions on the screen. If this screen appears again, go to troubleshooting for the GPS icon is white (see page 22-499).

Protected by AP

Map Matching

This part of the initialization matches the GPS codinates with a road on the map screen. To perform this part of the procedure, ensure that the navigation system is displaying a map, and drive the vehicle on a mapped road shown on the map screen). Do not enter a destination at this time. When the name of the current road you are driving on, appears at the bottom of the screen, the entire procedure is complete. Your system is now ready to use.

Obtaining A Navigation DVD

If the Navigation DVD is lost or damaged, or you need a yearly updated DVD, you have 2 ways to purchase one. You can either call (888) 549-3798, or order on-line at www.Acura.com.

Both methods require a credit card. The DVD for this model has an orange label, and cannot be ordered through the parts system. The following DVDs will not work in this navigation system:

- Earlier model navigation DVDs (black label)
- Map software programs manufactured by other companies
- DVD movies, or DVDs containing audio recordings

Update DVDs are available for purchase usually in the fall of each year. They may contain the following:

- Enhanced maps and Points of interest (POI) coverage
- Fixes for minor software bugs
- Additional features

NOTE: Updating is optional, and there is no program to provide free DVDs containing yearly mapping updates.

Protected by AR

Symptom Troubleshooting Index

Symptom	Diagnostic procedure	Also check for
Navigation system stays on the GPS Initialization screen	System Initialization (see page 22-458)	• Navigation unit • GPS antenna/cable • Harness/fuses/switches
No picture is displayed	Troubleshooting (see page 22-490)	• Navigation unit • Display panel control unit • Harness/fuses/switches
Picture is missing a color or tone	Troubleshooting (see page 22-491)	• Navigation unit • Display panel control unit • Harness/fuses/switches
Picture has lines/other issues	Troubleshooting (see page 22-493)	• Navigation unit • Display panel control unit • Harness/fuses/switches
Display panel control unit buttons and touch screen buttons do not work	Troubleshooting (see page 22-494)	• Navigation unit • Display panel control unit • Harness/fuses/switches
GPS icon is white	Troubleshooting (see page 22-499)	• Navigation unit • GPS antenna/cable • Harness/fuses/switches
Voice guidance cannot be heard	Troubleshooting (see page 22-499)	• Navigation unit • Audio unit/amplifier • Harness/fuses/switches
Voice control does not work	Troubleshooting (see page 22-501)	• Navigation unit • Microphone/voice control switch • Harness/fuses/switches
Touch screen button malfunction	Troubleshooting (see page 22-505)	
Cursor constantly leaves road	Troubleshooting (see page 22-506)	• Navigation unit • GPS antenna/cable • ECM/PCM (speed and fuel pulses) • Harness/fuses/switches
DVD screen error messages	Troubleshooting (see page 22-506)	• Navigation unit • Display panel control unit • DVD
Voice control cannot control A/C	Troubleshooting (see page 22-507)	• Display panel control unit • Harness/fuses/switches
Display day/night mode does not work	Troubleshooting (see page 22-507)	• Display panel control unit • Gauge control module (CAN) • Harness/fuses/switches
System locks up constantly	Troubleshooting (see page 22-508)	• Navigation unit • Harness/fuses/switches • DVD

Protected by

Symptom	Diagnostic procedure	Also check for
Vehicle icon wanders across the map when driving (does not follow a displayed road) or spins when driving	Troubleshooting (see page 22-508)	• Navigation unit • GPS antenna/cable • ECM/PCM
Navigation drives by itself when parked	Troubleshooting (see page 22-509)	
Navigation stays on with ignition switch off	Troubleshooting (see page 22-509)	
Navigation cannot control audio/ disc	Troubleshooting (see page 22-510)	
Audio-HVAC subdisplay-clock does not work properly	Troubleshooting (see page 22-510)	• Navigation unit • Audio-HVAC subdisplay-clock • Harness/fuses/switches
Navigaiton does not call using the HFL	Troubleshooting (see page 22-512)	
Navigation cannot control XM radio	Trouble shooting (see page 22-513)	

Protected by AR

System Description

Overview

The navigation system is a highly-sophisticated, hybrid locating system that uses satellites and a map database to show you where you are and to help guide you to a desired destination.

The navigation system receives signals from the global positioning system (GPS), a network of 24 satellites in orbit around the earth. By receiving signals from several of these satellites, the navigation system can determine the latitude, longitude, and elevation of the vehicle. In addition, signals from the system's yaw rate sensor and the ECM/PCM (vehicle speed pulse) enable the system to keep track of the vehicle's direction and speed of travel.

This hybrid system has advantages over a system that is either entirely self-contained or one that relies totally on the GPS. For example, the self-contained portion of the system can keep track of vehicle position even when satellite signals cannot be received. When the navigation system is on, the GPS can keep track of the vehicle position even when the vehicle is transported by ferry.

The navigation system applies all location, direction, and speed information to maps and calculates a route to the destination entered. As you drive to that destination, the system provides both visual and audio guidance.

This navigation system also has voice recognition that allows voice control of most of the navigation functions. The Talk and BACK buttons on the steering wheel activate the voice control. The voice control also allows control of the audio and climate control.

The illumination signal is used by the navigation unit to automatically switch the display between "Night" and "Day" brightness modes. When the instrument panel brightness control is set to full brightness, the navigation system stays in the day mode, even with the headlights on.

The audio amplifier gets its power either from the navigation system (if the audio unit is off) or from the audio unit (if the navigation system is off). When the navigation system is giving guidance commands, the front speakers are muted. When the voice control system is being used, all of the speakers are muted. If the HFL is in use, the voice control system is unavailable.

The GA-NET II bus passes information back and forth between the display panel control unit, the navigaiton unit and, and the audio system, The information passed on this bus are touch button commands, and audio and climate control settings directed by the navigaiton unit.

Protected by AR

System Diagram

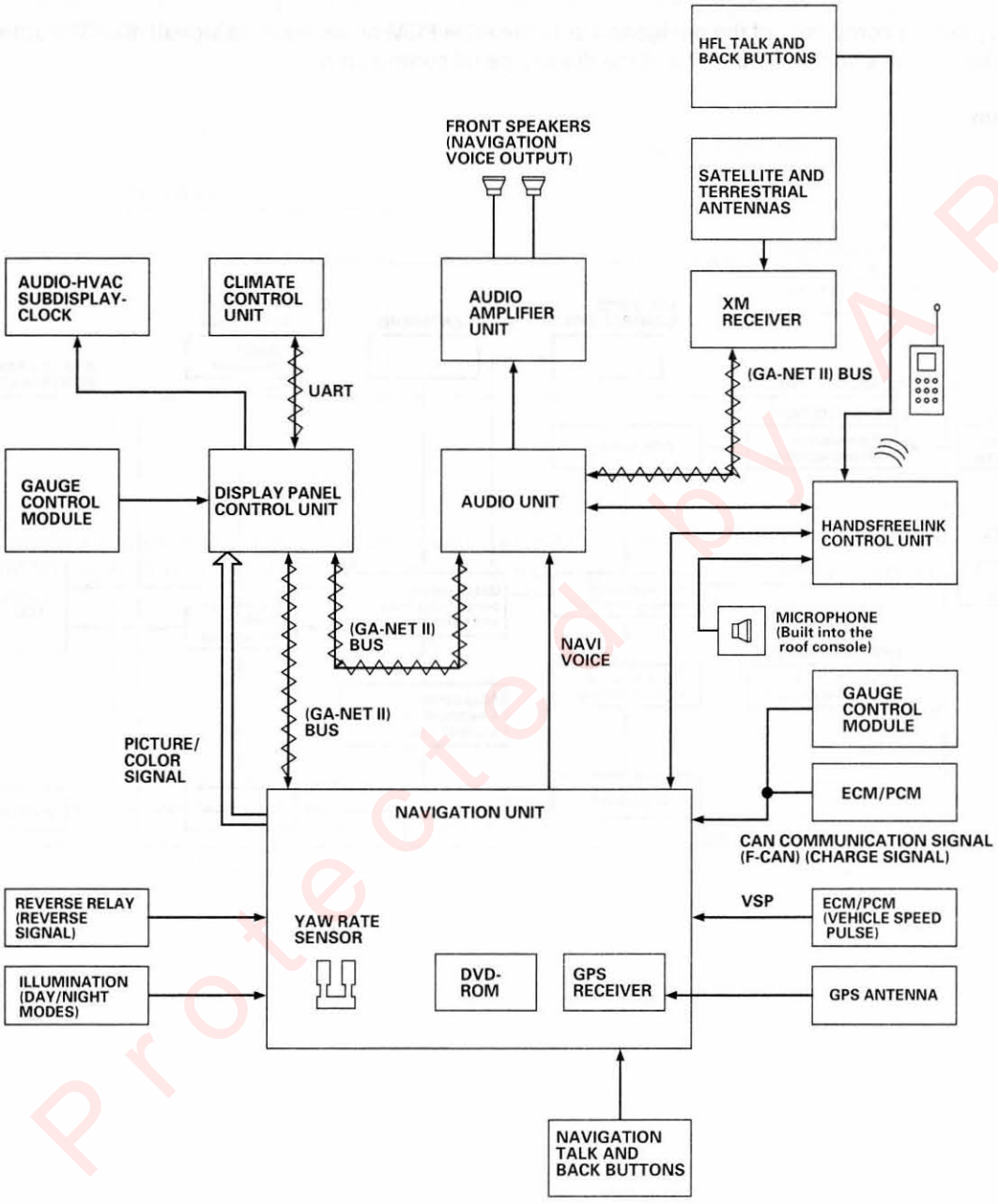

Protected by A R

(cont'd)

System Description (cont'd)

Navigation Function

The navigation system is composed of the navigation unit, the ECM/PCM (vehicle speed signal), the GPS antenna, microphone, voice control switch, audio unit and the display panel control unit.

Function Diagram

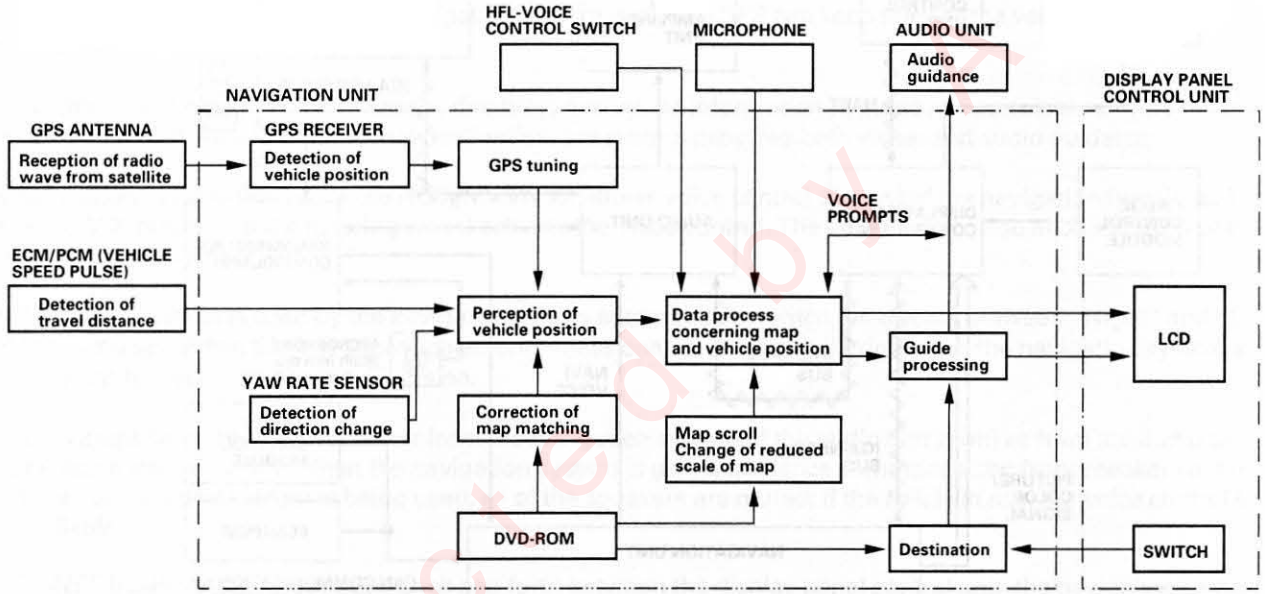

Protected by R

Vehicle Speed Pulse

The vehicle speed pulse is sent by the ECM/PCM. The ECM/PCM receives a signal from the countershaft speed sensor, then processes the signal and transmits it to the speedometer and other systems.

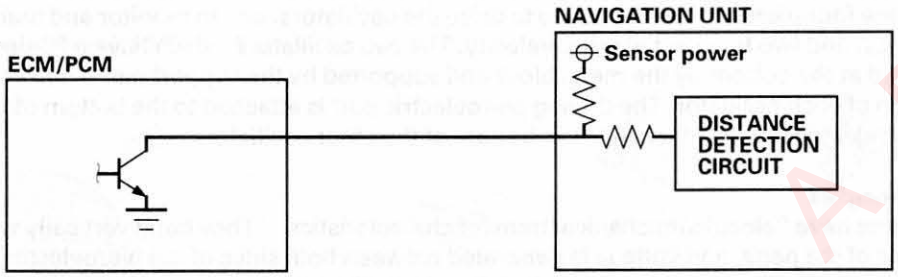

Charge Signal

The PCM sends a charge signal to the navigation unit via F-CAN. A thermister inside the navigation unit monitors the units internal temperature. This information combind with charge signal determines the control units internal cooling fan operation.

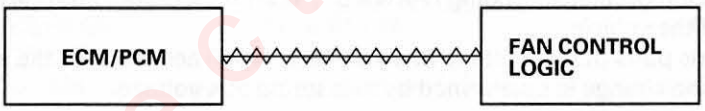

Protected by A R

(cont'd)

System Description (cont'd)

Yaw Rate-Lateral Acceleration Sensor
The yaw rate-lateral acceleration sensor (located in the navigation unit) detects the direction change (angular speed) of the vehicle. The sensor is an oscillation gyro built into the navigation unit.

Sensor Element Structure
The sensor element is shaped like a tuning fork, and it consists of the piezoelectric parts, the metal block, and the support pin. There are four piezoelectric parts: one to drive the oscillators, one to monitor and maintain the oscillation at a regular frequency, and two to detect angular velocity. The two oscillators, which have a 90-degree twist in the center, are connected at the bottom by the metal block and supported by the support pin. A detection piezoelectric part is attached to the top of each oscillator. The driving piezoelectric part is attached to the bottom of one oscillator, and the monitoring piezoelectric part is attached to the bottom of the other oscillator.

Oscillation Gyro Principles
The piezoelectric parts have "electric/mechanical transfer characteristics." They bend vertically when voltage is applied to both sides of the parts, and voltage is generated between both sides of the piezoelectoric parts when they are bent by an external force. The oscillation gyro functions by utilizing this characteristic of the piezoelectric parts and "Coriolis force." (Coriolis force deflects moving objects as a result of the earth's rotation.) In the oscillation gyro, this force moves the sensor element when angular velocity is applied.

Operation
1. The driving piezoelectric part oscillates the oscillator by repeatedly bending and returning when an AC voltage of 6 kHz is applied to the part, The monitoring-side oscillator resonates because it is connected to the driving-side oscillator by the metal block.
2. The monitoring piezoelectric part bends in proportion to the oscillation and outputs voltage (the monitor signal). The navigation unit control circuit controls the drive signal to stabilize the monitor signal.
3. When the vehicle is stopped, the detecting piezoelectric parts oscillate right and left with the oscillators, but no signal is output because the parts are not bent (no angular force)
4. When the vehicle turns to the right, the sensor element moves in a circular motion with the right oscillator bending forward and the left oscillator bending rearward. The amount of forward/rearward bend varies according to the angular velocity of the vehicle.
5. The detecting piezoelectric parts output voltage (the yaw rate signal) according to the amount of bend. The amount of vehicle direction change is determined by measuring this voltage.

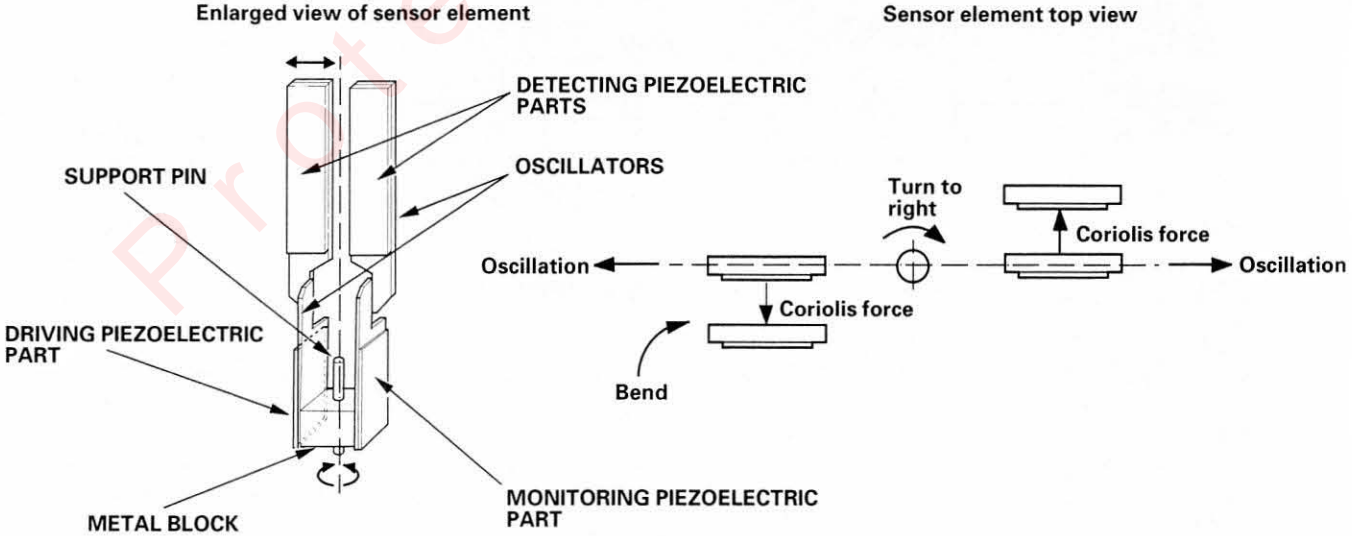

Global Positioning System (GPS)

The global positioning system (GPS) enables the navigation system to determine the current position of the vehicle by utilizing the signals transmitted from the satellites in orbit around the earth. The satellites transmit the satellite identification signal, orbit information, transmission time signal, and other information. When the GPS receiver receives a signal from three or more satellites simultaneously, it calculates the current position of the vehicle based on the distance to each satellite and the satellite positions on their respective orbits.

Position detection Image with GPS satellite

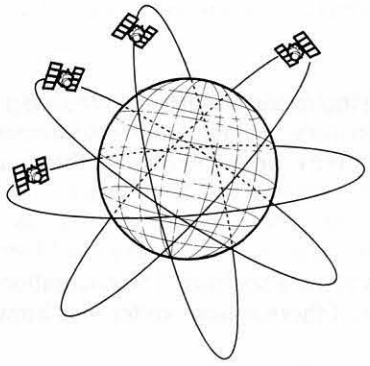

NOTE: Four satellites on each of 6 orbits.

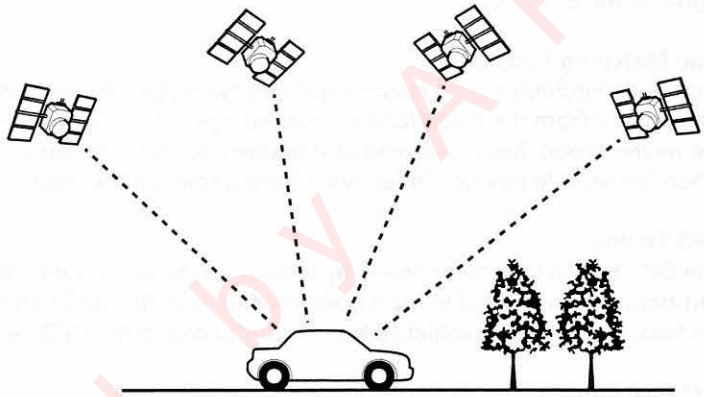

Precision of GPS

The precision of the GPS varies according to the number of satellites from which electric waves are received and the control condition. The precision is indicated by the color of the GPS icon shown on the upper right of the display.

GPS ICON	NUMBER OF SATELLITES	CONDITION	DESCRIPTION
White GPS icon	2 or less	Impossible to detect vehicle position	GPS function is normal. The satellite signals received by the GPS are too few to detect the vehicle position.
Green GPS icon	3	Vehicle position detectable in 2 dimensions	The longitude and latitude of the vehicle position can be detected. (Less precise than detection in three dimensions)
	4 or more	Vehicle position detectable in 3 dimensions	The longitude, latitude and the altitude of the vehicle position can be detected. (More precise than detection in two dimensions)
Not indicated	———	Faulty	The GPS can't be utilized due to a faulty GPS receiver, open in the wire, or other fault or interference.

GPS Antenna

The GPS antenna amplifies and transmits the signals received from the satellites to the GPS receiver.

GPS Receiver

The GPS receiver is built in the navigation unit. It calculates the vehicle position by receiving the signal from the GPS antenna. The vehicle position and signal reception condition is transmitted from the GPS receiver to the navigation control unit to adjust vehicle position.

(cont'd)

Protected by AR

System Description (cont'd)

Navigation Unit
The navigation unit calculates the vehicle position and guides you to the destination. The unit performs map matching correction, GPS correction, and distance tuning. It also controls the menu functions and the DVD-ROM drive, and interprets voice commands. With control of all these items, the navigation unit makes the navigation picture signal, then it transmits the signal to the display panel control unit and audio driving instructions to the audio unit.

Calculation of Vehicle Position
The navigation unit calculates the vehicle position (the driving direction and the current position) by receiving the directional change signals from the yaw rate sensor and the travel distance signals from vehicle speed pulse (VSP) signal of the ECM/PCM.

Map Matching Tuning
The map matching tuning is accomplished by indicating the vehicle position on the roads on the map. The map data transmitted from the DVD-ROM is checked against the vehicle position data, and the vehicle position is indicated on the nearest road. Map matching tuning does not occur when the vehicle travels on a road not shown on the map, or when the vehicle position is far away from a road on the map.

GPS Tuning
The GPS tuning is accomplished by indicating the vehicle position as the GPS's vehicle position. The navigation unit compares its calculated vehicle position data with the GPS vehicle position data. If there is large difference between the two, the indicated vehicle position is adjusted to the GPS vehicle position.

Distance Tuning
The distance tuning reduces the difference between the travel distance signal from the VSP and the distance data on the map. The navigation unit compares its calculated vehicle position data with the GPS vehicle position data. The navigation unit then decreases the tuning value when the vehicle position is always ahead of the GPS vehicle position, and it increases the tuning value when the vehicle position is always behind the GPS vehicle position.

Route Guidance
The navigation unit can calculate different routes to a selected destination. You have five options:
- Direct Route – Calculate a route that is the most direct.
- Easy Route – Calcute a route that minimizes the number of turns needed.
- Minimize Freeways – Calculate a route that avoids freeway travel. If that is not possible, keep the amount of freeway travel to a minimum.
- Minimize Toll Roads – Calculate a route that avoids, or minimizes travel on toll roads.
- Maximize Freeways – Calculate a route that uses freeways as much as possible.

Audio Guidance
The navigation unit transmits audio driving instructions before entering an intersection or passing a junction. The audio instructions come through the audio unit to the front speakers.

NOTE: The front speakers are muted whenever the navigation system is giving guidance commands, and all of the speakers when the voice control system is being used.

Muting Signal Logic
All muting signals are passed through the GA-Net II bus. The audio unit determines the muting logic and what audio source has priority to use the spakers.
If the HandsFreeLink (HFL) is in use, a signal is passed through the audio unit to tell the navigation unit that the HFL is in use. The navigation unit temporarily disables the voice control system and suppresses voice guidance commands. In addition, the audio unit suppresses the output from the radio, XM radio, disc player, or other audio accessories. When the navigaition system sends out a voice guidance command, the front speakers are muted, and the navigation voice is heard from the center speaker. When the voice control system is in use, all of the speakers are muted, and the navigation voice prornpts are heard from the center speaker. Signals sent on the bus also control turning on the external amplifier when the audio unit is off.

Protected by AR

DVD-ROM
The map and points of interest data (including all scale rates) are stored in the DVD-ROM. The map data includes:
- Road distances, road widths, speed limits, traffic regulations, passing time at junction, distances to junctions, and the driving instructions for audio guidance.
- Latitude and longitude GPS.

Audio Unit
The audio unit receives the voice guidance instructions from the navigation unit and transmits the instructions through the front speakers even when the audio system is in use.
NOTE: If the navigation volume is turned OFF, this feature is disabled.

Display Unit
The display unit uses liquid crystal display (LCD). The LCD is a 8-inch-diagonal, thin film transistor (TFT), stripe type with 336,960 picture elements, The color film and fluorescent light are laid out on the back of the liquid crystal film. The touch sensor on the front of the LCD consists of a touch sensitive resistive membrane with an infinite number of possible touch locations. To maintain compatibility with earlier display units the sensing locations are confined to a grid of 20 vertical and 9 horizontal touch locations. This produces 180 total sensing zones. The display unit transmits the signal from each operation key and the touch switches to the navigaiton unit over the GA-Net bus.

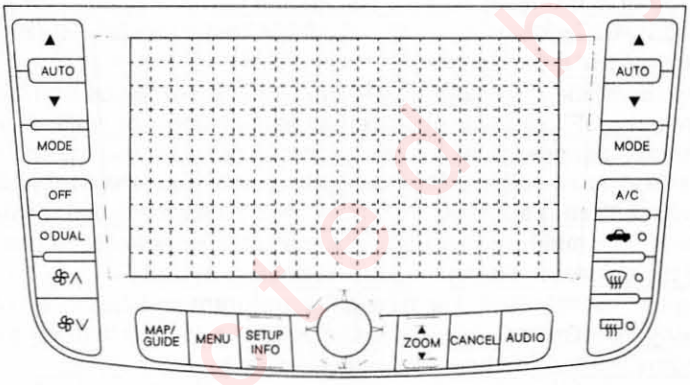

Microphone (Mic)
Receives voice commands and transmits them to the navigation unit or HandsFreeLink unit for interpretation.

Talk Button
Activates the voice control system in the navigation unit to accept voice commands.

BACK Button
Returns the display to the previous screen (similar function as the CANCEL button).

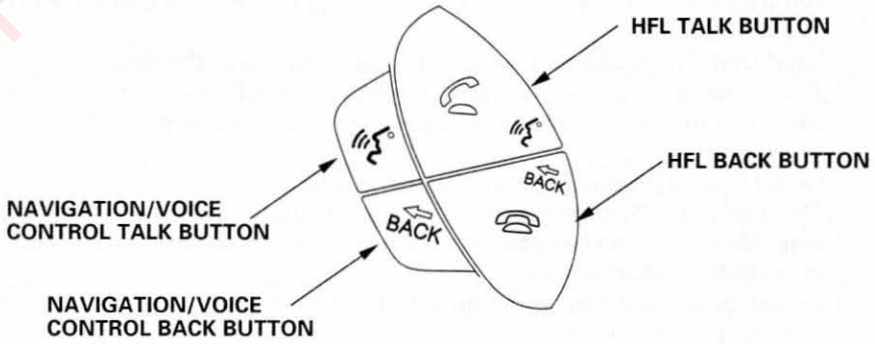

(cont'd)

System Description (cont'd)

Glossary

The following is a glossary of terms pertaining to the Voice Recognition Navigation System.

Item	Definition
B-CAN	Body CAN Bus (see CAN)
Breadcrumbs	Off road tracking dots that can be followed on the map to retrace your route back to a mapped (digitized) road. This function can be turned on/off in Setup screen 1.
CAN	Controller Area Network. This communication network allows processors in the vehicle to send/receive information. The fuel pulses used by the MID trip computer are received from the PCM using the F-CAN (Fast Controller Area Network) bus.
CPU	Central Processing Unit. The main device within the navigation unit that coordinates the rest of the electronic functions.
CSS	Countershaft (Output) Speed Sensor. This sensor reads the output shaft speed at the transmission and provides a speed pulse to the ECM/PCM.
Database	This consists of the Map data, and the POI (Points Of Interest) data stored on the DVD.
DBW	Drive By Wire. Allows electrical control of the throttle without the need of a mechanical linkage.
DCA	Detailed Coverage Area. Main metropolitan areas in the Lower 48 states, and Canada are mapped to this level. See the Navigation Owner's manual for a list of these areas.
DTC	Diagnostic Trouble Codes. Use the PGM Tester, or HDS tablet to obtain, and troubleshoot the cause of these codes.
Dead Reckoning	The use of the speed signal, and yaw rate sensor to position the vehicle on the map even when the GPS signal is obscured by tall buildings, or while driving in a tunnel.
Digitized Road	A road that appears on the navigation screen. The road name will appear at the bottom of the navigation screen. If the user drives "off road" the navigation system will display "Not on a digitized road", and if 1/2 mile, then "breadcrumbs" will appear.
Disclaimer Screen	Screen containing cautionary information. It is meant to read carefully and acknowledged by the customer when using the navigation system.
DVD or DVD-ROM	Digital Versatile Disk. The navigation program and database resides on this disk. See the Navigation Owner's Manual for information on how to order a replacement or update DVD.
ECM	Engine Control Module. Typically referred to as the PCM.
FAQ	Frequency Asked Questions. See the Navigation Owner's Manual for a list of the customer FAQs, and troubleshooting information.
F-CAN	Fast CAN Bus (see CAN)
GPS	Global Positioning System. A network of 24 satellites in orbit around the earth. The navigation system can simultaneously receive signals from up to 12 satellites to accurately positioning the vehicle on the map.
HDS	Honda Diagnostic System. A hand held tablet PC for use in diagnosing vehicle problems. This device can be used to obtain DTC codes for diagnosis of navigation system CAN related problems.
HFL	HandsFreeLink uses Bluetooth techology as a wireless link between it and a Bluetooth compatible cell phone. See the vehicle Owner's manual or Quick Start Guide for more information.
H/U	Head Unit. The navigation system display assembly in the dash.
Initialization	This refers to the period needed to re-acquire the GPS satellite orbital information whenever the navigation system power has been disconnected. This can take from 10 to 45 minutes.
LCD	Liquid Crystal Display (the navigation screen)
Map Matching	The received GPS information allows the navigation system to position the vehicle on the map. Map matching has occurred if the map screen is displaying the current street name in the bottom-shaded area.
Mic	Abbreviation for the microphone used for receiving voice commands. It is located near the map light in the ceiling.
MID	Multi-Information Display

Item	Definition
MW	Maneuver Window. While on-route to a destination, this window displays information about the next maneuver.
Navi	Abbreviation for the Navigation System.
Off Route	This occurs when the user leaves mapped roads. Off road tracking dots (''breadcrumbs'') are displayed if the option is enabled in Setup. The user can use them to return to a mapped road. The bottom of the navigation screen will say ''Not on a digitized road''
Outlying Areas	These are rural areas that typically have only their main roads mapped. All other roads are shown in light brown for reference only, since they have not been verified.
Paired	Linking your cell phone to the HFL
PC Card Slot	The PC Card (PCMCIA, type II) slot is for factory use only. Make sure that the sliding door is closed at all items, if opened, an error message is displayed on the screen.
PCM	Powertrain Control Module. This unit supplies the navigation system speed signal, and charge signal via the F-CAN network. Also refered to as ECM.
PCMCIA	An computer industry defined term referring to the PC Card slot standard.
PIN	Personal Identification Number, a random 4 digit number created by the customer to protect personal information.
POI	Point Of Interest. These are the businesses, schools etc. found under the ''places'' option on the main menu.
Polygon	Colored areas on the map screen denoting parks, schools etc. See the Navigation Owner's Manual ''Driving to Your Destination'' for a list of the assigned colors.
QWERTY	Keyboard layout resembling the typewriter keys. The keyboard layout can be changed to an alphabetical layout in the Setup mode.
SCS connector	The 2-pin connector used to put the navigation system into the diagnostic mode.
Security Code	Code needed to activate the navigation system. The security code can be obtained from the ''*i*N'' by entering the navigation system control serial number. The serial number can be found from the diagnostic screens (Unit Check, Navi ECU), or from the under side of the control unit.
Touch Screen Buttons or Touch Sensor	Audio-HVAC display panel has 2 clear films on the screen panel. If you touch the screen panel, the films engaged and the display unit detects the touch point.
Tuning	A continual update of internal navigation system scaling factors. See the individual sensor tuning discussions under either ''System Description'', or ''System Diagnosis Mode'' (see page 22-514) in this manual.
Unverified Streets	These streets have not been verified for turn restrictions, one-way, etc. They are shown in light brown on the map. You can enter address destinations in these areas, but depending on your "Unverified Routing" choice in Setup, voice guidance may end at the last verified street closest to your destination.
Verified Streets	These streets consist of the detailed metropolitan coverage areas, and all other inter-town connection roads. These roads are shown in black on the map.
VP	Vehicle Position. When in map mode, this circular icon shows the vehicle position on the map. Touch this icon to show the latitude, longitude, and elevation of your current position.
VR	Voice Recognition. This allows voice control of many of the navigation functions. The hardware consists of the microphone, voice control switch (Talk/Back buttons), and the front speakers. See the overview for more information.
VSP	Vehicle Speed Pulse. This pulse signal coming from the PCM (via the CSS) is used to update the Vehicle position on the map. These pulses do not indicate direction (forward or backward). When in reverse, the navigation receives a signal and directs the VP to move backwards on the map.
Yaw Sensor	This device is located in the navigation system control unit and senses the side-to-side twisting force generated when the vehicle turns. See a detailed description of how this sensor works in this manual.

(cont'd)

System Description (cont'd)

System Function Diagram

This diagram shows the features of the navigation system starting at the center and working outward in layers. The navigation program starts at "Key ON", and then displays the globe screen. Once the disclaimer screen is acknowledged, the next shaded portions of the diagram become active. However, some functions of the INFO and SET UP buttons, and all functions of the AUDIO and A/C buttons can be accessed immediately after the globe screen (white).

This items above the map screen show various methods to begin a destination, such as "Go Home". Once you begin driving to your destination, you are provided with map/voice guidance, routing cautions (in unverified areas), and a directions list. While driving to your destination, use the voice control system as much as possible to interact with the navigation, audio, and climate control systems.

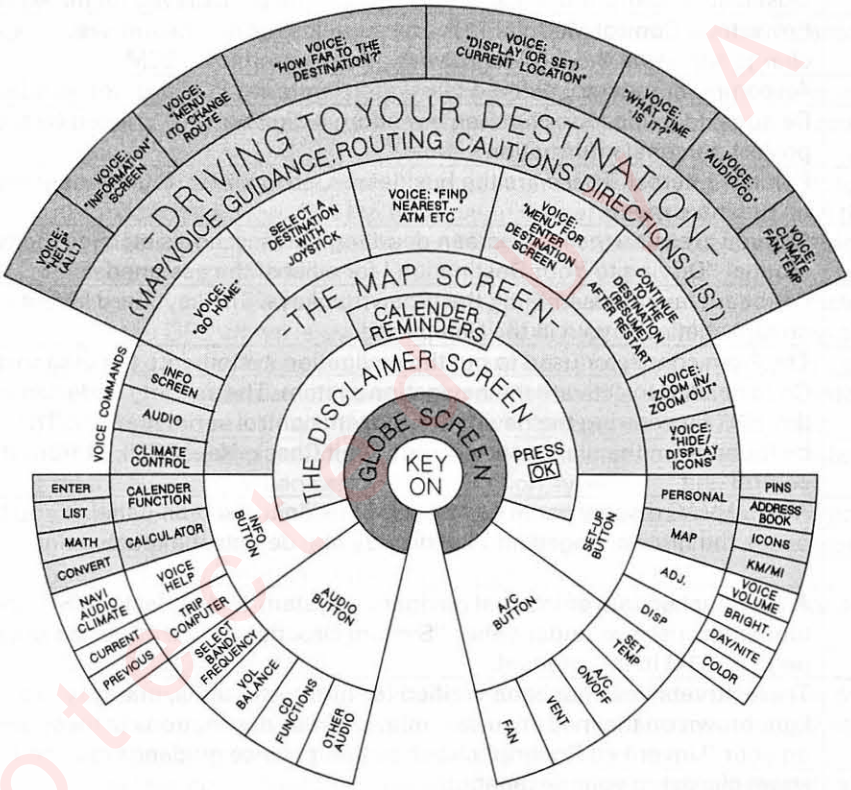

- Functions accessible at any time
- Disclaimer screen
- Map screen/voice commands to enter a destination
- Driving to your destination
- Voice commands while driving to your destination
- Globe screen

Protected by COPYRIGHT

Diagnostic Function Diagram

This diagram shows the diagnostic slice of the System Function Diaggram. It has the diagnostic features of the navigation system starting at the center and working outward in layers. The diagnostic starts at "Key ON," and then displays the Diagnostic Main Menu (Select Diagnosis items) after:

Starting the vehicle with the SCS connector plugged in to the navigation service check connector (see page 22-533) to get to the System Links screen, then selecting Return.

Simultaneously pressing and holding the MENU, MAP/GUIDE, and CANCEL buttons.

The diagram shows the available menu choices starting at the buttom left and moving clockwise.

You will find a detailed explanation of each feature on the given page numbers.

In most cases, do not clear or change settings in any diagnostic screen unless instructed to do so in the explanation or by the factory. If the factory supplies you with a PCMCIA card to place in the PC solt, then the features specified in the diagram with "Card" are available. The section labeled "For Developer Only" contains items for factory use. For instance, the factory might ask you for information from System History.

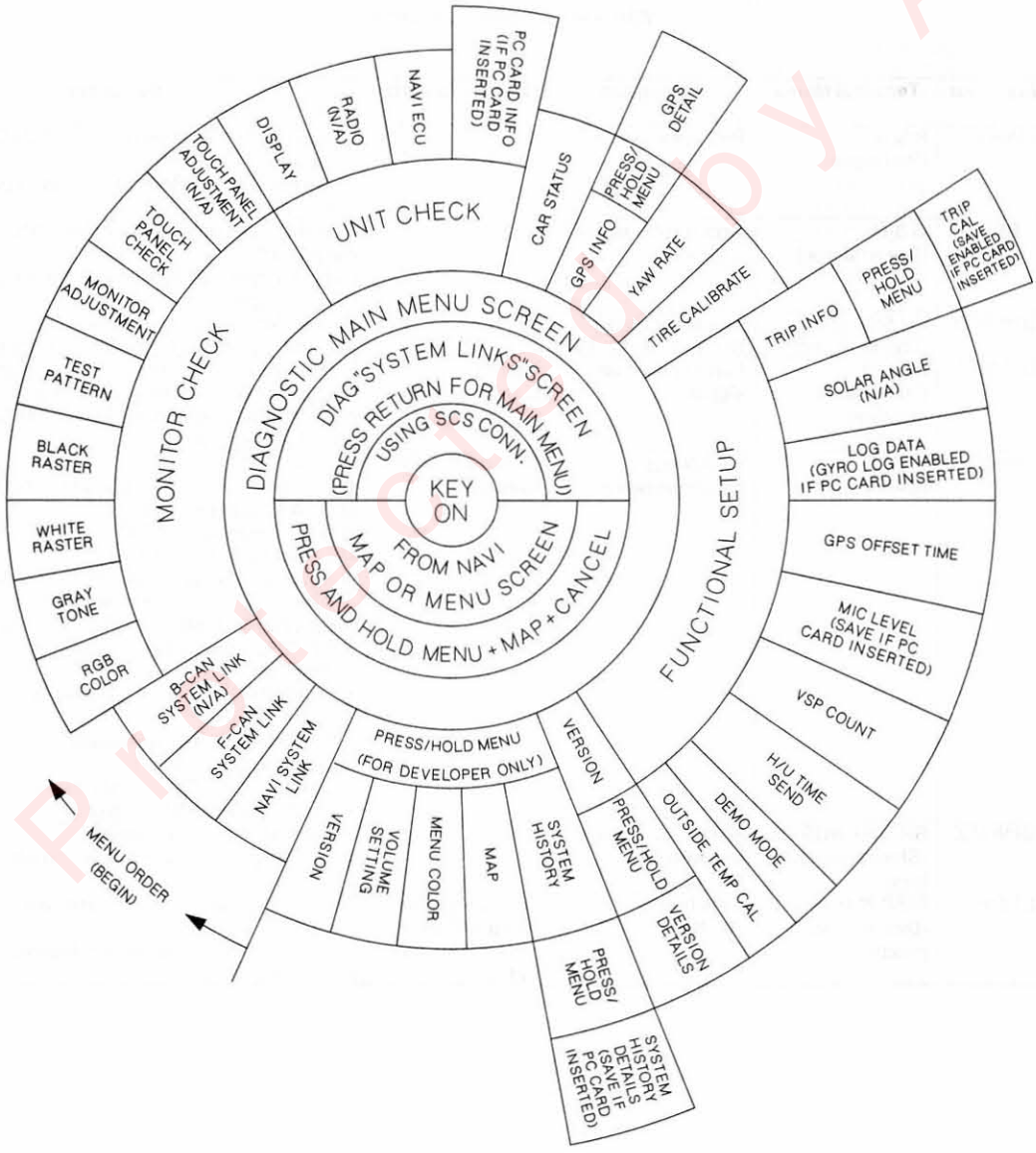

(cont'd)

System Description (cont'd)

Navigation Unit Inputs and Outputs for Connector A (20P)

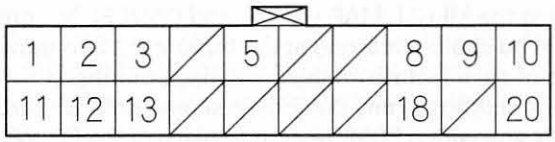

Wire side of female terminals

Terminal Number	Wire Color	Terminal Name	Description	Voltage (about)	Symptom
1	WHT	R SIG (Red signal)	Red color signal	0 – 1 V	If open: Red color missing (see "RGB Color" diagnostic). If short to ground: Red color missing (see "RGB Color" diagnostic).
2	RED	G SIG (Green signal)	Green color signal	0 – 1 V	If open: Green color missing (see "RGB Color" diagnostic). If short to ground: Green color missing (see "RGB Color" diagnostic).
3	GRY/RED	SH SIG (Shield signal)	Shield for terminal No. 1, 2, 11, 12, 13	0 V	If open: No change to display. If short to ground: No change to display.
5	RED/BLK	ILL (+) (Illumination positive)	Parking light on signal	Lights on: battery voltage, Lights off: 0 V	If open: When brightness="Auto", night mode for the display is inoperative when lights on. If short to ground: Blows No. 4 (10A) fuse in under-hood fuse/relay box.
8	WHT	CAN-H (CAN high)	F-CAN bus communication	Pulses 2.5 – 6 V average 3 V	If open: 1) System Links FI-ECU, and Meter both show "NG". 2) F-CAN diagnostic="NG". 3) B-CAN diagnostic="NG". 4) Car status CHG (CAN)=0. 5) Functional Setup, Trip into, FUP & Sampled FL=0. If short to ground: Same diagnostic conditions as when open, and also sets the following DTCs. • B1168 Gauge Control Module loss of Comm. (Engine) • B1169 Gauge Control Module loss of Comm. (A/T) • B1178 F-CAN communication Circuit error. • U0073 (F-CAN bus off) • U0155 (F-CAN Gauge control module) • U0121 (F-CAN VSA control)
9	GRN/BLK	SH DISP BUS (Shield display bus)	Shield for display bus terminal No. 10, 20	0 V	If open: No change to display. If short to ground: No change to display.
10	LT GRN	DISP BUS (+) (Display bus positive)	Date bus (+) GA-Net	0 V – 5 V pulses average 2.5 V depends on bus traffic	If open: Navigation buttons and touch screen do not work. If short to ground: Navigation buttons and touch screen do not work.

Protected by AR

Terminal Number	Wire Color	Terminal Name	Description	Voltage (about)	Symptom
11	YEL	B SIG (Blue signal)	Blue color signal	0 – 1 V AC	If open: Blue color missing (see "RGB Color" diagnostic). If short to ground: Blue color missing (see "RGB Color" diagnostic).
12	BRN	C SIG (Composite signal)	Composite video (vertical/horizontal) Synchronizing signal	0.3 V AC	If open: Picture rolls horizontally, colors still visible. If short to ground: Picture rolls horizontally, colors still visible.
13	BLU	GND SIG (Ground signal)	Ground for color signal	0 V	If open: No change to display. If short to ground: No change to display.
18	RED	CAN-L (CAN low)	F-CAN bus communication	Pulses 2.5 – 6 V average 3 V	If open: 1) System Links ECM/PCM, and Gauge Control Module both show "NG". 2) F-CAN diagnostic="NG". 3) B-CAN diagnostic="NG". 4) Car status CHG (CAN)=0. 5) Functional Setup, Trip into, FUP & Sampled FL=0. If short to ground: Same diagnostic conditions as when open, and also sets the following DTCs. • B1168 Gauge Control Module loss of Comm. (Engine) • B1169 Gauge Control Module loss of Comm. (A/T) • B1178 F-CAN communication Circuit error. • U0073 (F-CAN bus off) • U0155 (F-CAN Gauge control module) • U0121 (F-CAN VSA control)
20	YEL	DISP BUS (–) (Display bus negative)	Date bus (–) GA-Net	0 – 5 V pulses nominally 2.5 V	If open: Navigation buttons and touch screen do not work. If short to ground: Hard and touch buttons work OK.

(cont'd)

System Description (cont'd)

Navigation Unit Inputs and Outputs for Connector B (14P)

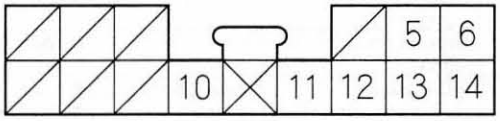

Wire side of female terminals

Terminal Number	Wire Color	Terminal Name	Description	Voltage (about)	Symptom
5	WHT	RG L (+) (Route guidance voice left positive)	Left audio signal of voice guidance, and Voice Recognition (VR) prompts	Audio signal 0.004 – 0.04 V	If open: If voice activated, radio speakers buzz; if voice off, no effect. If short to ground: If voice activated, radio speakers buzz; if voice off, no effect.
6	RED/BLU	MIC SIG (+) (Mic signal positive)	Microphone output signal positive	4 – 5 V (TALK button pressed)	If open: No microphone signal shown in diagnostic screens: "Navi System Link" and Functional Setup "Mic Level". If short to ground: No microphone signal shown in diagnostic screens: "Navi System Link" and Functional Setup "Mic Level".
10	GRY	STRG SW (Steering switches)	Steering switch output	4 – 5 V (TALK button pressed) 2.5 – 3 V (BACK button pressed)	If open: Steering wheel Talk and BACK buttons do not work. If short to ground: Steering wheel Talk, and BACK buttons do not work.
11	LT GRN	SH RG (Shield route guidance)	Shield for terminal No. 5, 12	0 V	If open: No effect on voice output. If short to ground: No effect on voice output.
12	BLU/RED	GND RG (Ground route guidance)	Ground for voice guidance, and Voice Recognition (VR) prompts	0 V	If open: No effect on voice output. If short to ground: No effect on voice output.
13	LT BLU	SH MIC (Shield mic)	Shield for terminal No. 6, 14	0 V	If open: No effect on voice control. If short to ground: No effect on voice control.
14	YEL	GND MIC (Ground mic)	Ground for microphone signal	0 V	If open: No microphone signal shown in diagnostics: "Navi System Link" and Functional Setup "Mic Level". If short to ground: No effect on voice recognition.

Protected by A R

Navigation Unit Inputs and Outputs for Connector C (8P)

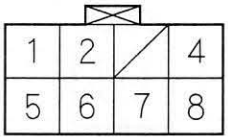

Wire side of female terminals

Terminal Number	Wire Color	Terminal Name	Description	Voltage (about)	Symptom
1	WHT/RED	+B (+B Power source)	Continuous power source	Battery voltage	If open: Display picture goes out (display back light still on). NOTE: System will reboot to "enter code" screen. If short to ground: Blows fuse No. 7 (10A) in the under-dash fuse/relay box.
2	YEL/RED	ACC (Accessory)	Power source for accessories	Battery voltage at ACC (I)	If open: Display picture goes out (display back light still on). If short to ground: Blows fuse No. 32 (7.5A) in the under-dash fuse/relay box.
4	BLK	GND (Ground)	Ground for navigation unit	0 V	If open: No effect on system. If short to ground: No effect on system.
5	GRN	BACK LT (Back light or reverse signal)	Reverse signal of select lever from "Multiplex Integrated Control Unit" (A/T) or backup light switch (M/T)	In reverse, battery voltage: Otherwise 0 V	If open: Navigation never sees reverse. Diagnostic screen "Car Status", "Back"=0. If short to ground: Blows fuse No. 21 (7.5A) in the under-dash fuse/relay box.
6	BLU/WHT	VSP (Vehicle speed pulse)	Vehicle speed pulse signal from PCM	Pulses 0 – 5 V: Average 2.5 V, when moving	If open: No vehicle speed pulses. Diagnostic screen "Car Status", VSP Navi=0. If short to ground: No vehicle speed pulses. Diagnostic screen "Car Status", VSP Navi=0.
7	GRN/RED	DIAG P (Diagnostic positive)	Service check signal for navigation system	5 – 6 V	If open: No effect on system. If short to ground: System goes into diagnostic mode.
8	GRN/YEL	DIAG N (Diagnostic negative)	Ground for service check signal	0 V	If open: No effect on system. If short to ground: No effect on system.

(cont'd)

System Description (cont'd)

Navigation Unit Inputs and Outputs for Connector E (2P)

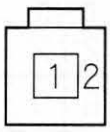

Wire side of female terminals

Terminal Number	Wire Color	Terminal Name	Description	Voltage (about)	Symptom
1	———	GPS	GPS signal	5 V	If open: GPS icon on screen is white, system links screen ANT shows "NG". If short to body ground: Same as open.
2	———	GND GPS	Ground for GPS signal	0 V	If open: GPS icon on screen is white, system links screen ANT shows "NG". If short to body ground: No effect on system.

Protected by A R

Navigation Unit Inputs and Outputs for Connector F (5P)

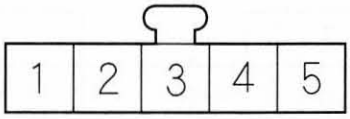

Wire side of female terminals

Terminal Number	Wire Color	Terminal Name	Description	Voltage (about)	Symptom
1	ORN/BLU	HFL COMM3 (HFL communication 3)	Communication signal for HFL	——	Solid red HFL icon in Navi System Link
2	BLU/GRN	HFL COMM4 (HFL communication 4)	Communication signal for HFL	——	Solid red HFL icon in Navi System Link
3	BLU/YEL	HFL COMM1 (HFL communication 1)	Communication signal for HFL	——	HFL icon in Navi System Link changes between red and green
4	WHT/BLU	HFL COMM2 (HFL communication 2)	Communication signal for HFL	——	HFL icon in Navi System Link changes between red and green
5	BRN	SH HFL (Shield HFL)	Shield for terminal No.1, 2, 3, 4	——	——

Protected by A R

(cont'd)

System Description (cont'd)

Display Panel Control Unit Inputs and Outputs for Connector A (14P)

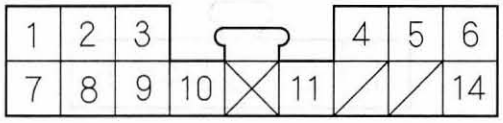

Wire side of female terminals

Terminal Number	Wire Color	Terminal Name	Description	Voltage (about)	Symptom
1	BLK	GND (Ground)	Ground for display unit	0 V	If open: No change to display. If short to ground: No change to display.
2	RED	ILL (−) (Illumination negative)	Parking light (for bulb) brightness control signal	Lights on: battery voltage Lights off: 0 V	If open: When brightness="AUTO", night mode for the display is inoperative when lights on. If short to ground: Parking light is on every time.
3	BLU	AUD BUS (+) (Audio bus positive)	Data bus (+) GA-Net	0 − 5 V pulses average 2.5 V depends on bus traffic	If open: Navigation buttons and touch screen do not work. If short to ground: Navagation buttons and touch screen do not work.
4	RED/BLK	ILL (+) (Illumination positive)	Parking light on signal	Lights on: battery voltage Lights off: 0 V	If open: When brightness="AUTO", night mode for the display is inoperative when lights on. If short to ground: Blows No. 4 (10A) fuse in under-hood fuse/relay box.
5	YEL/RED	ACC (Accessory)	Power source for accessory	Battery voltage at ACC (I)	If open: Display and buttons do not work. If short to ground: Blows No. 32 (7.5A) fuse in under-dash fuse/relay box.
6	WHT/RED	+B (+B power cource)	Continuous power source	Battery voltage	If open: Screen completely off (no backlight visible). If short to ground: Blows No. 7 (7.5A) fuse in under-dash fese/relay box.

Protected by A R

Terminal Number	Wire Color	Terminal Name	Description	Voltage (about)	Symptom
7	RED/BLU	ILL (−) (Illumination negative)	Parking light (for LED) brightness control signal	Lights on: battery voltage Lights off: 0 V	If open: When brightness="AUTO", night mode for the display is inoperative when lights on. If short to ground: Parking light is on every time.
8	BLU/WHT	IMSI	——	——	——
9	GRN/ORN	IMSO	——	——	——
10	WHT	SH AUD BUS (Shield audio bus)	Shield for terminal No. 3, 11	0 V	If open: No change to display. If short to ground: No change to display.
11	RED	AUD BUS (−) (Audio bus negative)	Data bus (−) GA-Net	0 − 5 V pulses average 2.5 V depends on bus traffic	If open: Navigation buttons and touch screen do not work. If short to ground: Navigation buttons and touch screen work OK.
14	LT BLU	B-CAN (Body CAN)	B-CAN bus communication	——	——

Protected by AR

(cont'd)

System Description (cont'd)

Display Panel Control Unit Inputs and Outputs for Connector B (6P)

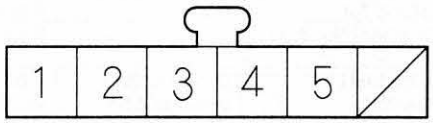

Wire side of female terminals

Terminal Number	Wire Color	Terminal Name	Description	Voltage (about)	Symptom
1	WHT/BLU	GND (Ground)	Ground for switch signal (common ground between display panel and A/C)	——	——
2	WHT/RED	FR DEF (Front defroster)	Front defroster switch signal to A/C	——	——
3	YEL/BLK	A/C RX (Air conditioner receive)	Communication signal for climate control unit (UART receive display panel to A/C)	——	——
4	BRN	A/C TX (Air conditioner transmit)	Communication signal for climate control unit (UART transmit to A/C)	——	——
5	WHT/BLK	IG2 (Ignition 2)	Power source for switch signal (to inform display panel IG2 is ON)	Battery voltage at IG2 (II)	——

Protected by A R

Display Panel Control Unit Inputs and Outputs for Connector E (22P)

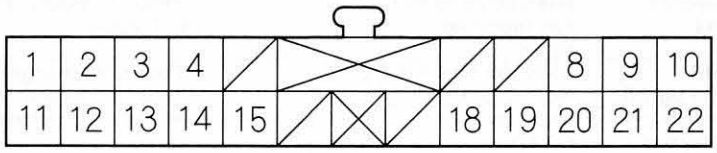

Wire side of female terminals

Terminal Number	Wire Color	Terminal Name	Description	Voltage (about)	Symptom
1	WHT	R SIG (Red signal)	Red color signal	0 – 1 V	If open: Red color missing (see "RGB Color" diagnostic). If short to ground: Red color missing (see "RGB Color" diagnostic).
2	RED	G SIG (Green signal)	Green color signal	0 – 1 V	If open: Green color missing (see "RGB Color" diagnostic). If short to ground: Green color missing (see "RGB Color" diagnostic).
3	BLU	GND SIG (Ground signal)	Ground for color signal	0 V	If open: No change to display. If short to ground: No change to display.
4	LT GRN	DISP BUS (+) (Display bus positive)	Data bus (+) GA-Net	0 – 5 V pulses average 2.5 V depends on bus traffic	If open: Navigation buttons and touch screen do not work. If short to ground: Navigation buttons and touch screen do not work.
8	BRN/BLK	SH SIG (Shield signal)	Shield for terminal No. 9, 10, 21, 22	0 V	If open: No change to display. If short to ground: No change to display.
9	BLU	CE	Communication signal	0 – 5 V Data 4 – 6 V Average	If open: All Audio-HVAC subdisplay-clock LCD segments on, backlight on. If short to ground: All Audio-HVAC subdisplay-clock LCD segments on, backlight on.
10	BLU/RED	DATA	Communication signal	0 – 5 V Data 4 – 6 V Average	If open: All Audio-HVAC subdisplay LCD segments on, backlight on. If short to ground: All Audio-HVAC subdisplay-clock LCD segments on, backlight on.

(cont'd)

Protected by AR

System Description (cont'd)

Terminal Number	Wire Color	Terminal Name	Description	Voltage (about)	Symptom
11	YEL	B SIG (Blue signal)	Blue color signal	0 – 1 V	If open: Blue color missing (see "RGB Color" diagnostic). If short to ground: Blue color missing (see "RGB Color" diagnostic).
12	BRN	C SIG (Composite signal)	Composite video (vertical/horizontal) synchronizing signal	0.3 V	If open: Picture rolls horizontally, colors still visible. If short to ground: Picture rolls horizontally, colors still visible.
13	GRY/RED	SH SIG (Shield signal)	Shield for terminal No. 1, 2, 3, 11, 12	0 V	If open: No change to display. If short to ground: No change to display.
14	YEL	DISP BUS (–) (Display bus negative)	Data bus (–) GA-Net	0 – 5 V pulses average 2.5 V depends on bus traffic	If open: Navigation buttons and touch screen do not work. If short to ground: Navigation buttons and touch screen do not work.
15	GRN/BLK	SH DISP BUS (Shield display bus)	Shield for display bus terminal No. 4, 14	0 V	If open: No change to display. If short to ground: No change to display.
18	RED/BLU	LCD BL (+) (LCD backlight+)	Power for LCD backlight+	9.5 V	If open: Audio-HVAC subdisplay-clock completely blank. If short to ground: Audio-HVAC subdisplay completely blank.
19	RED	LCD BL (–) (LCD backlight–)	Power for LCD backlight–	0 – 0.2 V	If open: Audio-HVAC subdisplay-clock functions normally, but display is very dim. If short to ground: Audio-HVAC subdisplay-clock functions normally.
20	BLU/ORN	5 V	Power source for audio-HVAC subdisplay-clock	5 V	If open: All Audio-HVAC subdisplay-clock LCD segments show briefly at key on. If short to ground: All Audio-HVAC subdisplay-clock LCD segments do not work, Audio-HVAC subdisplay-clock backlight on.
21	YEL	CLOCK	Time information signal	0 – 5 V Data 0.04 V Average	If open: Audio-HVAC subdisplay-clock randomly displays some characters, display backlight on. If short to ground: Audio-HVAC subdisplay-clock randomly displays some characters, display backlight on.
22	YEL/RED	RESET	Time set sync signal	5 V	If open: Clock Audio-HVAC subdisplay-clock will not set to navigation time (when time offset is applied or when "Reset" touched in Setup "Clock Adjustment" screen). If short to ground: All Audio-HVAC subdisplay-clock LCD segments do not work, display backlight on.

Protected by A R

Audio-HVAC Subdisplay-Clock Inputs and Outputs for 10P Connector

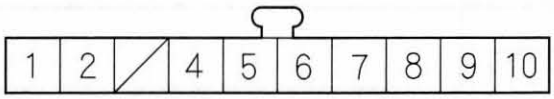

Wire side of female terminals

Terminal Number	Wire Color	Terminal Name	Description	Voltage (about)	Symptom
1	BLK	GND	Ground for audio-HVAC subdisplay-clock	0 V	If open: Audio-HVAC subdisplay-clock visible, but very dim. If short to ground: Audio-HVAC subdisplay-clock unaffected.
2	BLU/ORN	5 V	Power source for audio-HVAC subdisplay-clock	5 V	If open: All Audio-HVAC subdisplay-clock LCD segments show briefly at key on. If short to ground: All Audio-HVAC subdisplay-clock LCD segments do not work. Audio-HVAC subdisplay-clock backlight on.
4	YEL/RED	RESET	Time set sync signal	5 V	If open: Clock Audio-HVAC subdisplay-clock will not set to navigation time (when time offset is applied or when "Reset" touched in Setup "Clock Adjustment" screen). If short to ground: All Audio-HVAC subdisplay-clock LCD segments do not work display backlight on.
5	YEL	CLOCK	Time information signal	0 – 5 V Data 0.04 V Average	If open: Audio-HVAC subdisplay-clock randomly displays some characters, display backlight on. If short to ground: Audio-HVAC subdisplay-clock randomly displayed characters, display backlight on.
6	BLU/RED	DATA	Communication signal	0 – 5 V Data 4 – 6 V Average	If open: All Audio-HVAC subdisplay-clock LCD segments on, backlight on. If short to ground: All Audio-HVAC subdisplay-clock LCD segments on, backlight on.
7	BLU	CE	Connunication signal	0 – 5 V Data 4 – 6 V Average	If open: All Audio-HVAC subdisplay-clock LCD segments on, backlight on. If short to ground: All Audio-HVAC subdisplay-clock LCD segments on, backlight on.
8	BRN/BLK	SH SIG	Shield for terminal No. 4, 5, 6, 7	0 V	If open: No effect on Audio-HVAC subdisplay-clock. If short to ground: No effect on Audio-HVAC subdisplay-clock.
9	RED	LCD BL (–) (LCD backlight –)	Power for LCD backlight –	0 – 0.2 V	If open: Audio-HVAC subdisplay-clock functions normally, but display is very dim. If short to ground: Audio-HVAC subdisplay-clock functions normally.
10	RED/BLU	LCD BL (+) (LCD backlight +)	Power for LCD backlight +	9.5 V	If open: Audio-HVAC subdisplay-clock completely blank. If short to ground: Audio-HVAC subdisplay-clock completely blank.

Protected by A R

Circuit Diagram

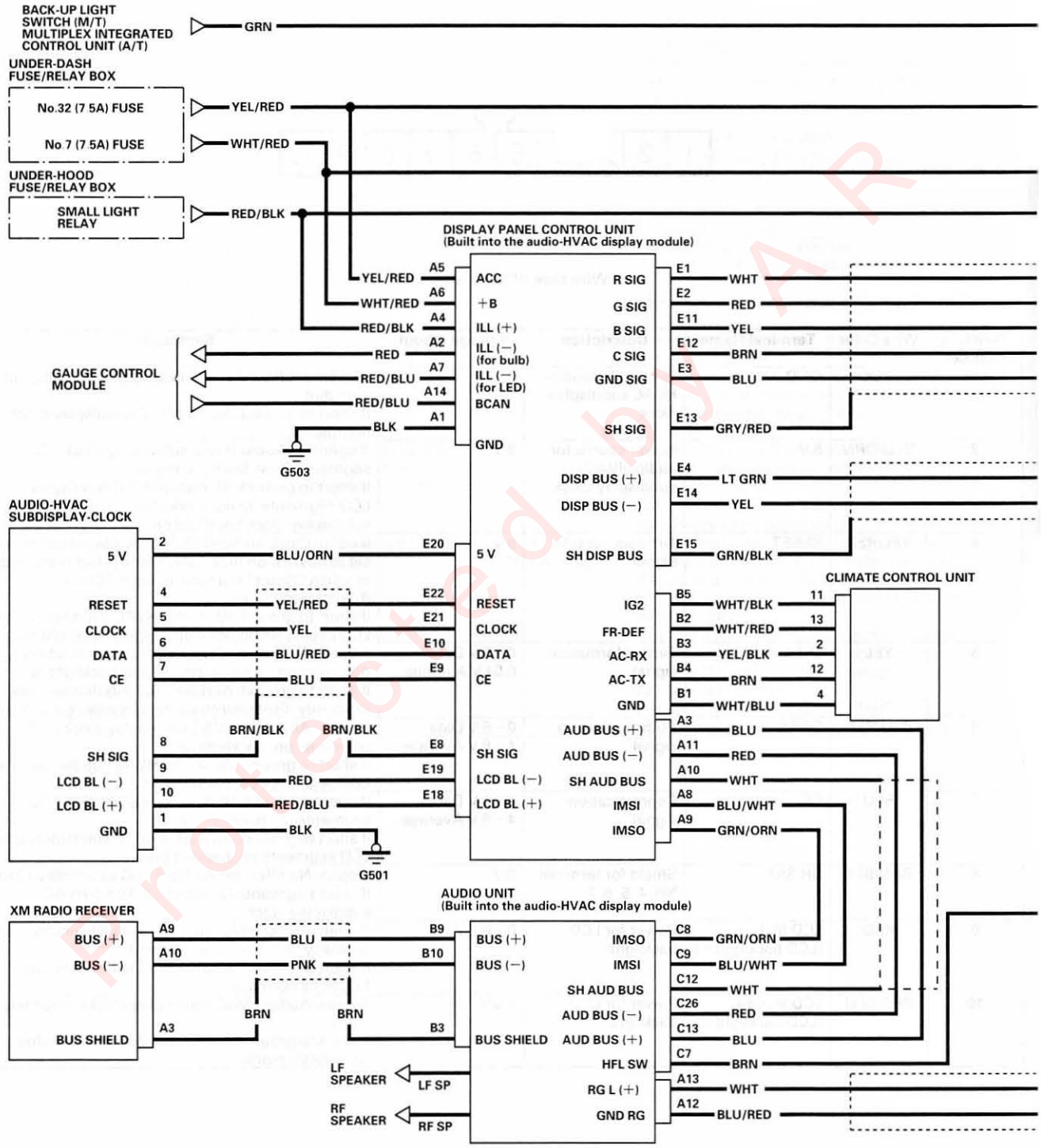

Protected by AR

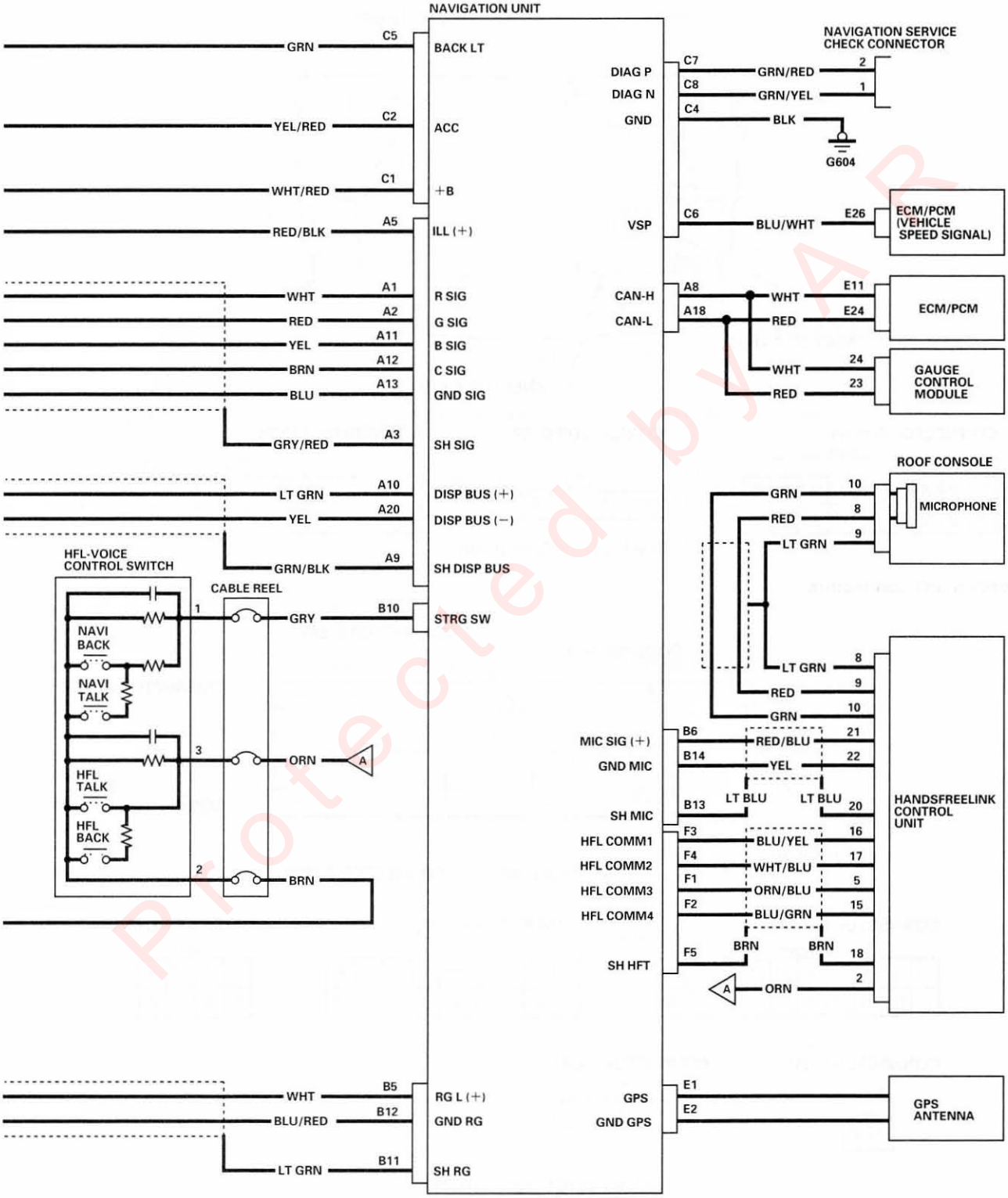

(cont'd)

Protected by AR

Circuit Diagram (cont'd)

Display panel control unit connectors

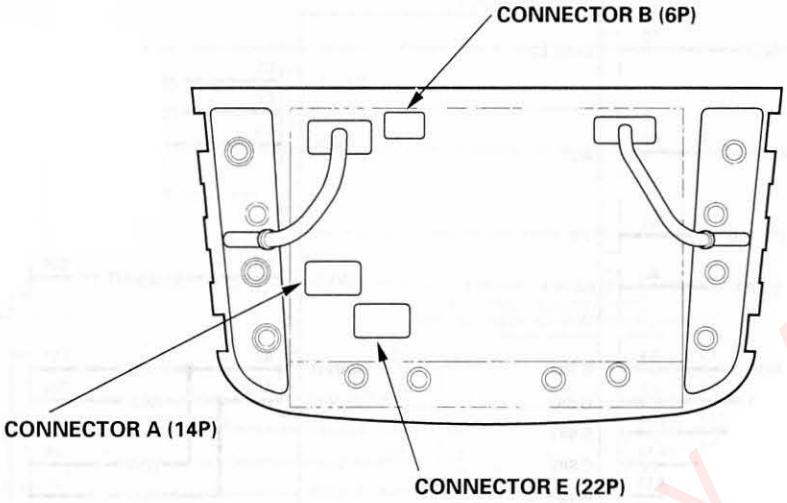

CONNECTOR A (14P)

1	2	3					4	5	6				
7	8	9	10	X	11				14				

CONNECTOR B (6P)

1	2	3	4	5	

Wire side of female terminals

CONNECTOR E (22P)

1	2	3	4		X				8	9	10										
11	12	13	14	15		X		18	19	20	21	22									

Navigation unit connectors

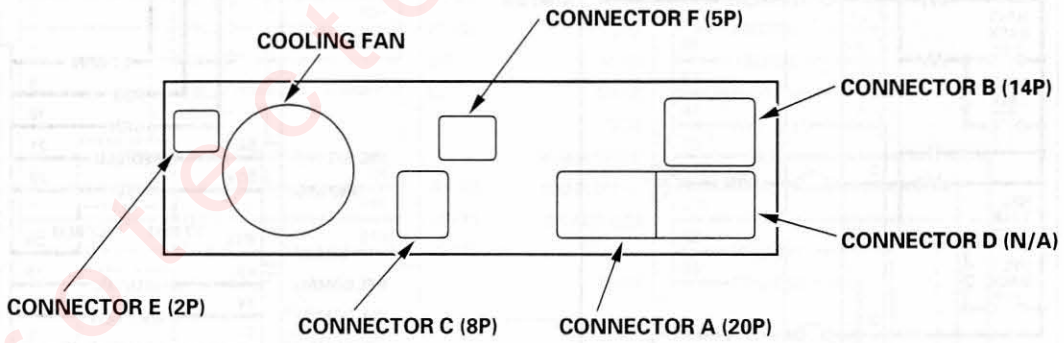

CONNECTOR A (20P)

1	2	3		5			8	9	10
11	12	13					18		20

CONNECTOR B (14P)

								5	6				
					10	X	11	12	13	14			

CONNECTOR C (8P)

1	2		4
5	6	7	8

CONNECTOR E (2P)

1	2

CONNECTOR F (5P)

1	2	3	4	5

Wire side of female terminals

Protected by AR

Audio unit connectors

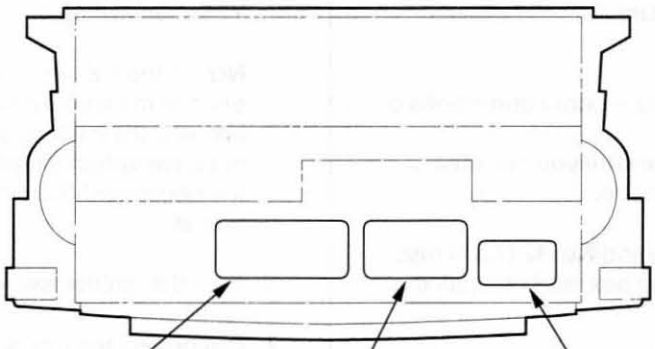

CONNECTOR A (20P)

1	2	3	4	5	6	7	8	9	10
11	12	13	14	15	16	17	18	19	20

CONNECTOR B (14P)

1							3						
				9	10								

CONNECTOR C (26P)

1	2	3			6	7	8	9	10	11	12	13
14	15	16			19							26

Wire side of female terminals

Audio-HVAC subdisplay-clock connectors

AUDIO-HVAC SUBDISPLAY-CLOCK 10P CONNECTOR

1	2		4	5	6	7	8	9	10

Wire side of female terminals

Protected by AR

Symptom Troubleshooting

No picture is displayed

Diagnostic Test: Navi System Link

NOTE:
- Always check the connectors for poor connections or loose terminals.
- Before troubleshooting, make sure you have the navigation system anti-theft code.

1. Check the No. 7 (7.5A) fuse and No. 32 (7.5A) fuse in the under-dash fuse relay box, and reinstall the fuses if they are OK.

   Are the fuses OK?

   YES – Go to step 2.

   NO – Replace the fuse and recheck. ■

2. Turn the ignition switch to ACC (I).
3. Operate the radio and listen to the audio.

   Can audio be heard?

   YES – Go to step 4.

   NO – Check the ACC circuit. ■

4. Turn the ignition switch ON (II).
5. Measure the voltage between body ground and navigation unit connector C (8P) terminals No. 1 and No. 2 individually.

NAVIGATION UNIT CONNECTOR C (8P)

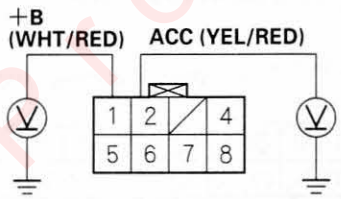

Wire side of female terminals

Is there battery voltage?

YES – Go to step 6.

NO – If the +B wire does not have voltage, repair open in the wire between the under-dash fuse relay box and the navigation unit. If the ACC wire does not have voltage, repair open in the wire between the under-dash fuse/relay box and the navigation unit. ■

6. Turn the ignition switch OFF.
7. Disconnect the navigation unit connector C (8P).
8. Check for continuity between navigation unit connector C (8P) terminal No. 4 and body ground.

NAVIGATION UNIT CONNECTOR C (8P)

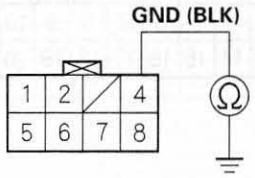

Wire side of female terminals

Is there continuity?

YES – Go to step 9.

NO – Repair open in the wire between the navigation unit and body ground (G503). ■

9. Reconnect the navigation unit connector C (8P).
10. Perform the forced starting of the display (see page 22-533).

    Is the diagnosis menu of the picture diagnosis displayed?

    YES – Go into the Diagnostic mode and use the "Navi System Link" diagnostic (see page 22-515) to check the links. ■

    NO – Go to step 11.

Protected by AR

11. Shield the display panel from the sun with your hand, and check that the display is back lit (only back light is ON.)

    Can you see the back light?

    YES – Replace the navigation unit (see page 22-534) and retest. If the problem is still present; replace the display panel control unit (see page 22-438). ■

    NO – Go to step 12.

12. Turn the ignition switch ON (II).

13. Measure the voltage between body ground and display panel control unit connector A (14P) terminal No. 1 and No. 2 individually.

DISPLAY PANEL CONTROL UNIT CONNECTOR A (14P)

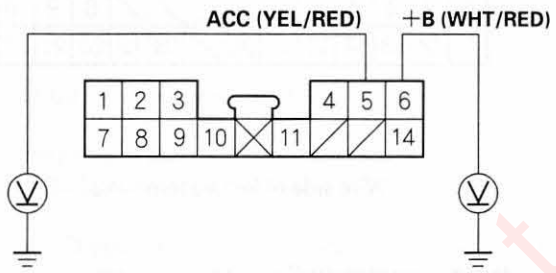

Wire side of female terminals

Is there battery voltage?

YES – Replace the display panel control unit. ■

NO – If the +B wire does not have voltage, repair open in the wire between the under-dash fuse relay box and the display panel control unit connector A (14P). If the ACC wire does not have voltage, repair open in the wire between the under-dash fuse/relay box and the display panel control unit connector A (14P). ■

Picture is missing a color or tone

Diagnostic Test: Monitor Check

NOTE:
- Always check the connectors for poor connections or loose terminals.
- Before troubleshooting, make sure you have the navigation system anti-theft codes.

1. Go into the Diagnostic mode and use "RGB Color" diagnostic under Monitor Check (see page 22-516).

   Are the red, green, and blue colored circles shown?

   YES – The system is OK at this time. ■

   NO – Go to step 2.

2. Turn the ignition switch to OFF.

3. Disconnect the navigation unit connector A (20P) and display panel control unit connector E (22P).

4. Check for loose terminals at navigation unit connector A (20P) and display panel control unit connector E (22P).

   Are there loose terminals?

   YES – Repair the terminal. ■

   NO – Go to step 5.

(cont'd)

Protected by AR

Symptom Troubleshooting (cont'd)

5. Check for continuity between the appropriate terminals of navigation unit connector A (20P) and display panel control unit connector E (22P) based on the missing color(s).

Missing color or input	Navigation unit connector A (20P)	Display panel control unit connector E (22P)	Wire color
Blue	A11	E11	YEL
Green	A2	E2	RED
Red	A1	E1	WHT
Rolling Picture	A12	E12	BRN

NAVIGATION UNIT CONNECTOR A (20P)

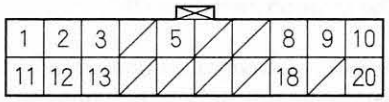

Wire side of female terminals

DISPLAY PANEL CONTROL UNIT CONNECTOR E (22P)

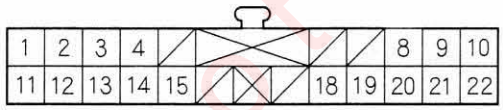

Wire side of female terminals

Is there continuity?

YES – Go to step 6.

NO – There is an open in the circuit between the display panel control unit and the navigation unit. Check for poor connections or loose terminals at the display panel control unit and navigation unit. If a poor connection or loose terminal is found, replace the affected shielded harness. ■

6. Check for continuity between the appropriate terminals of display panel control unit connector E (22P) based on the missing color(s).

Missing color	Display panel control unit connector E (22P) terminal	Display panel control unit connector E (22P) terminals
Blue	E11	A1, E13
Green	E2	A1, E13
Red	E1	A1, E13
Rolling Picture	E12	A1, E13

DISPLAY PANEL CONTROL UNIT CONNECTOR E (22P)

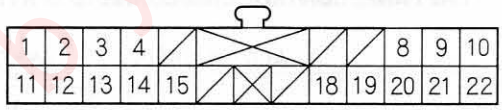

Wire side of female terminals

Is there continuity?

YES – There is a short to body ground in the circuit between the display panel control unit and the navigation unit. Replace the affected shielded harness. ■

NO – Check for poor connections or loose terminals at the navigation unit and recheck. If a poor connection or loose terminal is found, replace the shielded harness. If no poor connections or loose terminals are found, substitute a known-good navigation unit and recheck. If the problem is gone, replace the navigation unit (see page 22-534). If not replace the display panel control unit (see page 22-438). ■

Protected by ARS

Picture has lines/other issues

Diagnostic Test: Monitor Check

NOTE:
- Always compare the screen image to a known-good vehiele. If the screen looks the same, inform the customer that it is charcteristic.
- Always check the connectors for poor connections or loose terminals.
- Before troubleshooting, make sure you have the navigation system anti-theft code.

1. Check for electronic aftermarket accessories (passibly hidden) mounted near the display unit or the navigation unit.

   Are there any electronic accessories?

   YES – Disable the accessories, and recheck. ■

   NO – Go to step 2.

2. Start up the navigation picture.

   Is the picture scrolling horizontally (left to right or right to left)?

   YES – Check for an open or short to ground in the C SIG wire from navigation unit connector A (20P) terminal No. 12 to display panel control unit connector E (22P) terminal No. 12. Also check for a short to ground between display panel control unit connector E (22P) terminal No. 12 and terminal No. 13. ■

   NO – Go to step 3.

3. Go into the Diagnostic mode and use "RGB Color" diagnostic under Monitor Check (see page 22-516).

   Is the picture missing a red, green or blue color?

   YES – Do troubleshooting for the picture is missing a color or tone (see page 22-491). ■

   NO – Go to step 4.

4. Turn the ignition switch OFF.

5. Substitute a known-good display panel control unit (see page 22-438), and recheck.

   Is the picture OK?

   YES – Check for loose connections, then replace the original display panel control unit (see page 22-438). ■

   NO – Check for loose connections and recheck. If a poor connection or loose terminal is found, replace the shielded harness. If no poor or loose terminals are found, substitute a known-good navigation unit (see page 22-534) and recheck. If the problem is gone, replace the original navigation unit (see page 22-534). ■

Protected by M R

Symptom Troubleshooting (cont'd)

Display panel control unit buttons and touch screen buttons do not work

NOTE:
- Always check the connectors for poor connections or loose terminals.
- Before troubleshooting, make sure you have the navigation system anti-theft code.

1. Turn the ignition switch to ACC (I).

2. Try several navigation buttons and touch screen buttons.

Do all buttons function properly?

YES – The system is OK at this time. ■

NO –
- If all navigation buttons and touch screen are inoperative, go to step 3.
- If some navigation buttons operate normally, while others do not, go into the Diagnostic mode and use "Touch Panel" diagnostic under Monitor Check (see page 22-516) and if necessary, "Display" diagnostic under Unit Check (see page 22-519). ■

3. Measure the voltage between body ground and display panel control unit connector A (14P) terminal No. 5 and No. 6 individually.

DISPLAY PANEL CONTROL UNIT CONNECTOR A (14P)

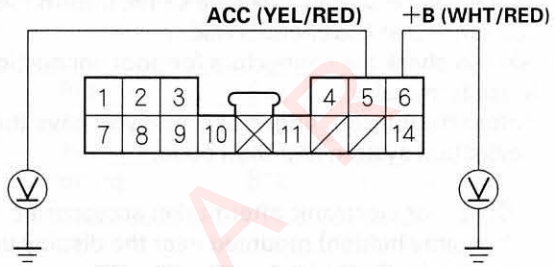

Wire side of female terminals

Is there vattery voltage?

YES – Go to step 4.

NO – If the +B wire dose not have voltage, repeir the open in the wire between the under-dash fuse/relay box and the display panel control unit. If the ACC wire does not have voltage, repair the open in the wire between the under-dash fuse/relay box and the display panel control unit. ■

Protected by A

4. Turn the ignition switch OFF.
5. Disconnect audio unit connector A and B.
6. Disconnect the XM radio receiver.
7. Disconnect the display panel control unit connector A (14P).
8. Disconnect the navigation unit connector A (20P).
9. Check for continuity between display panel control unit connector A (14P) terminal No. 1 and body ground.

DISPLAY PANEL CONTROL UNIT CONNECTOR A (14P)

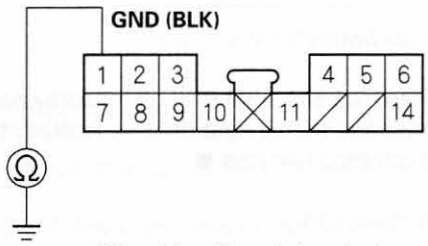

Wire side of female terminals

Is there continuity?

YES – Go to step 10.

NO – Repair the open in the wire between the display panel control unit and body ground (G503). ■

10. Check for continuity between body ground and display panel control unit connector A (14P) terminal No. 3, No. 11 individually.

DISPLAY PANEL CONTROL UNIT CONNECTOR A (14P)

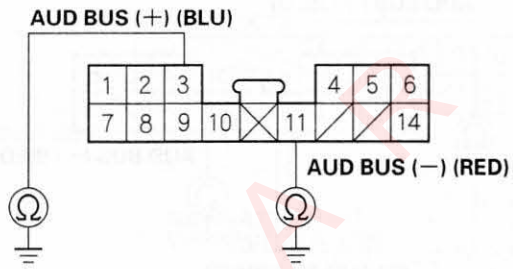

Wire side of female terminals

Is there continuity?

YES – There is a short to body ground in the circuit between the display panel control unit and the audio unit. Replace the affected shielded harness. ■

NO – Go to step 11.

11. Check for continuity between body ground and display panel control unit connector E (22P) terminal No. 4 and No. 14 individually.

DISPLAY PANEL CONTROL UNIT CONNECTOR E (22P)

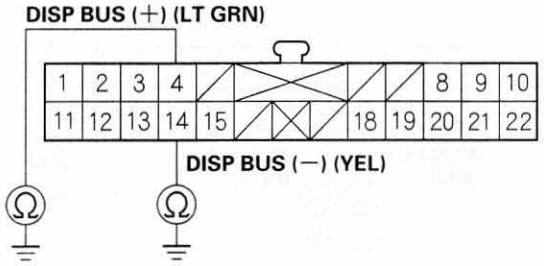

Wire side of female terminals

Is there continuity?

YES – There is a short to body ground in the circuit between the display panel control unit and the navigation unit. Replace the affected shielded harness. ■

NO – Go to step 12.

(cont'd)

Protected by AK

Symptom Troubleshooting (cont'd)

12. Check for continuity between display panel control unit connector A (14P) terminal No. 10 and terminals No. 3 and No. 11 individually.

DISPLAY PANEL CONTROL UNIT CONNECTOR A (14P)

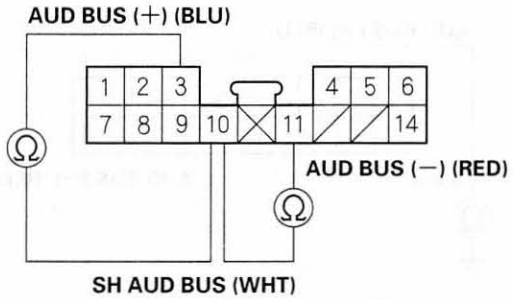

Wire side of female terminals

Is there continuity?

YES – There is a short between the display panel control unit and the audio unit. Replace the affected shielded harness. ■

NO – Go to step 13.

13. Check for continuity between audio unit connector B (14P) terminals B3, B9 and B10 to body ground individuall.

AUDIO UNIT CONNECTOR B (14P)

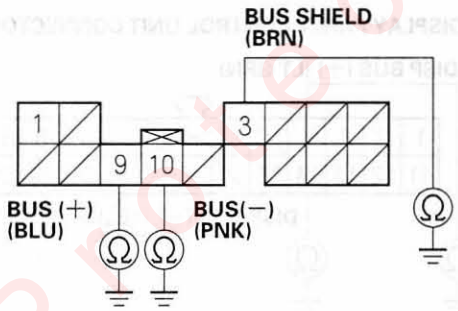

Wire side of female terminals

Is there continuity?

YES – There is a short between the audio unit and XM radio receiver. Replace the affected harness. ■

NO – Go to step 14.

14. Check for continuity between display panel control unit connector E (22P) terminal No. 15 and terminals No. 4 and No. 14 individually.

DISPLAY PANEL CONTROL UNIT CONNECTOR E (22P)

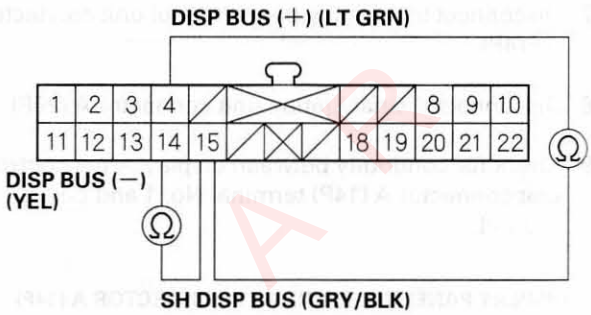

Wire side of female terminals

Is there continuity?

YES – There is a short between the display panel control unit and the navigation unit. Replace the affected shielded harness. ■

NO – Go to step 15.

Protected by A

15. Check for continuity between display panel control unit connector E (22P) terminal No. 4 and navigation unit connector A (20P) terminal No. 10.

DISPLAY PANEL CONTROL UNIT CONNECTOR E (22P)

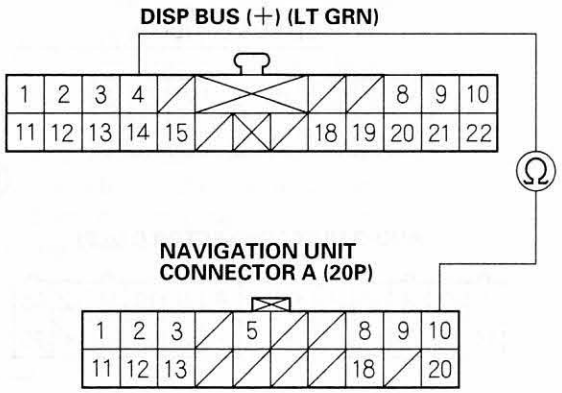

Is there continuity?

YES – Go to step 16.

NO – There is an open in the circuit between the display panel control unit and the navigation unit. Check for poor connections or loose terminals at the display panel control unit and navigation unit. If a poor connection or loose terminal is found, replace the affected shielded harness. ■

16. Check for continuity between display panel control unit connector E (22P) terminal No. 14 and navigation unit connector A (20P) terminal No. 20.

DISPLAY PANEL CONTROL UNIT CONNECTOR E (22P)

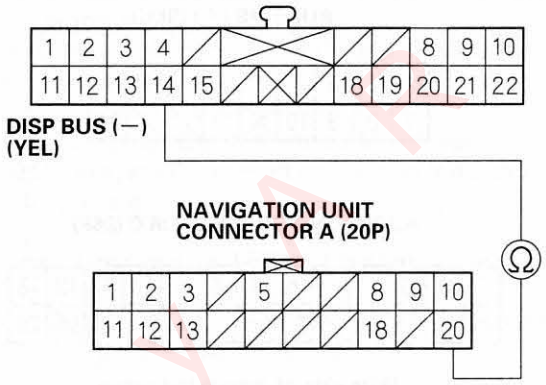

Is there continuity?

YES – Go to step 17.

NO – There is an open in the circuit between the display panel control unit and the navigation unit. Check for poor connections or loose terminals at the display panel control unit and navigation unit. If a poor connection or loose terminal is found, replace the affected shielded harness. ■

(cont'd)

Protected by A

Symptom Troubleshooting (cont'd)

17. Check for continuity between display panel control unit connector A (14P) terminal No. 3 and audio unit connector C (26P) terminal No. 13.

DISPLAY PANEL CONTROL UNIT CONNECTOR A (14P)

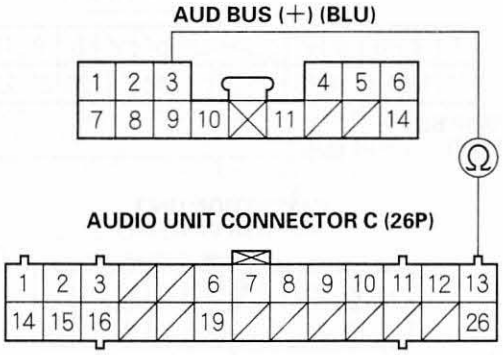

Wire side of female terminals

Is there continuity?

YES – Go to step 18.

NO – There is an open in the circuit between the display panel control unit and the audio unit. Check for poor connections or loose terminals at the display panel control unit and audio unit. If a poor connection or loose terminal is found, replace the affected shielded harness. ■

18. Check for continuity between display panel control unit connector A (14P) terminal No. 13 and audio unit connector C (26P) terminal No. 26.

DISPLAY PANEL CONTROL UNIT CONNECTOR A (14P)

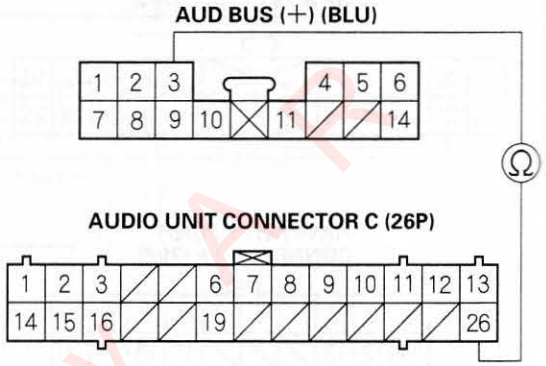

Wire side of female terminals

Is there continuity?

YES – Replace the display panel control unit (see page 22-438). ■

NO – There is an open in the circuit between the display panel control unit and the audio unit. Check for poor connections or loose terminals at the display panel control unit and audio unit. If a poor connection or loose terminal is found, replace the affected shielded harness. ■

Protected by A...

GPS icon is white

Diagnostic Test: Navi System Link

NOTE:
- Make sure the vehicle is parked outside and away from buildings.
- Refer to GPS Information (see page 22-522) for realtime satellite reception display.

1. Check for metallic window tint on the windshield and electronic aftermarket accessories (possibly hidden) mounted near the GPS antenna or the navigation unit.

   Is there metallic window tint or electronic accessories?

   YES – Remove tint or the accessories and recheck.■

   NO – Go to step 2.

2. Go into the Diagnostic mode and use the "Navi System Link" diagnostic (see page 22-515) to check the GPS antenna.

   Is "GPS Ant" icon red?

   YES – Check for a kinked, crushed, or disconnected GPS antenna wire. If icon is still red, replace the GPS antenna.■

   NO – Check that nothing is blocking the GPS antenna located under the package shelf and recheck. Substitute a known-good GPS antenna, and recheck.■

   - If the symptom is gone, replace the GPS antenna.
   - If the symptom is still present, substitute a known-good navigation unit and recheck. If the symptom is gone, replace the original navigation unit (see page 22-534).

Voice guidance cannot be heard

Diagnostic Test: Navi System Link

NOTE:
- Always check the connectors for poor connections or loose terminals.
- Before troubleshooting, write down the customer's XM radio channel presets, and get the radio and navigation system anti-theft codes.
- After troubleshooting, enter the XM radio and navigation system anti-theft codes, and the radio station presets.

1. Press the display unit SET-UP button.

2. Check the volume and voice feedback setting for the navigation system in set-up.

   Is it set to OFF?

   YES – Set the volume to ON and select an audible level.■

   NO – Go to step 3.

3. Check the radio operation.

   Can you hear the radio?

   YES – Go to step 4.

   NO – Troubleshoot the audio system.■

4. Go into the Diagnostic mode and use the "Navi System Link" diagnostic (see page 22-515) to check the radio.

   Is "Radio" icon red?

   YES – Troubleshoot the audio system.■

   NO – Go to step 5.

5. Turn the ignition switch OFF.

6. Disconnect the navigation unit connector B (14P) and the audio unit connector A (20P).

(cont'd)

Protected by AR

Symptom Troubleshooting (cont'd)

7. Check for continuity between body ground and navigation unit connector B (14P) terminals No. 5, No. 12 individually.

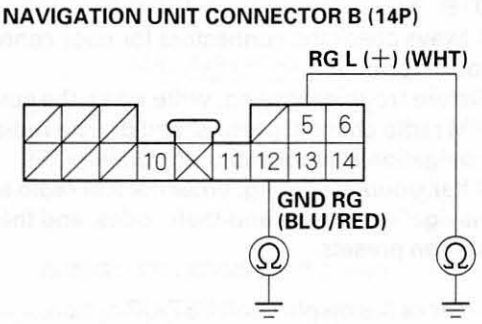

Is there continuity?

YES – Repair short to ground in the harness between the navigation and audio units. Replace the affected shielded harness. ■

NO – Go to step 8.

8. Check for continuity between navigation unit connector B (14P) terminal No. 11 and terminals No. 5 and No. 12 individually.

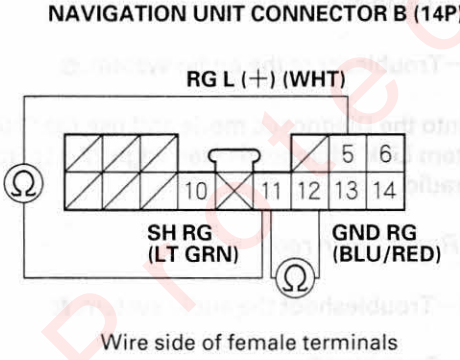

Is there continuity?

YES – Repair short to ground in the harness between the navigation and audio units. Replace the affected shielded harness. ■

NO – Go to step 9.

9. Check for continuity between navigation unit connector B (14P) terminal No. 5 and the audio unit connector A (20P) terminal No. 13.

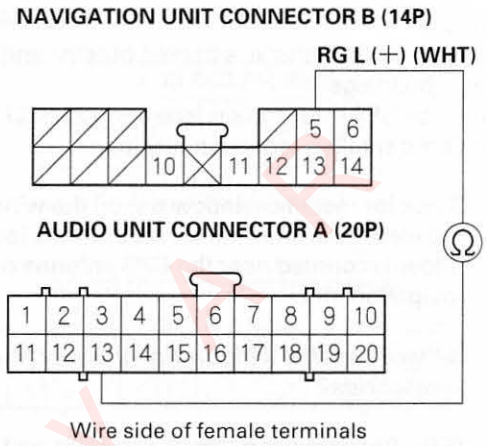

Is there continuity?

YES – Go to step 10.

NO – There is an open in the circuit between the navigation unit and audio unit. Check for poor connections or loose terminals at the audio and navigation units. If a poor connection or loose terminal is found, replace the affected shielded harness. ■

Protected by A.P.

10. Check for continuity between navigation unit connector B (14P) terminal No. 12 and the audio unit connector A (20P) terminal No. 12.

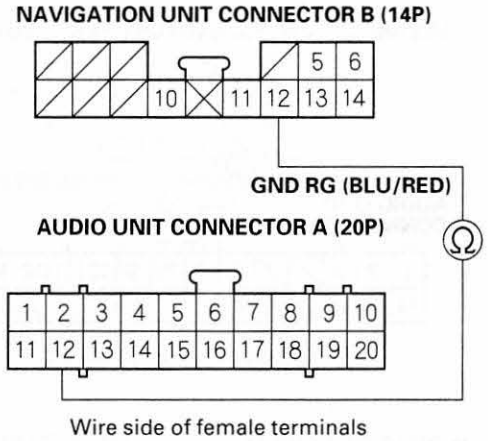

Is there continuity?

YES – Go to step 11.

NO – There is an open in the circuit between the navigation unit and the audio unit. Check for poor connections or loose terminals at the audio and navigation units. If a poor connection or loose terminal is found, replace the affected shielded harness. ■

11. Substitute a known-good audio unit, and recheck.

Is the system OK?

YES – Replace the audio unit. ■

NO – Replace the navigation unit (see page 22-534). ■

Voice control does not work

Diagnostic Test: Mic Level

NOTE:

- Before assuming that a voice complaint is hardware related, ensure that the voice control system is being operated correctly.
  - Make sure you are on the correct screen when trying to issue a voice command. For instance, the command "Find the nearest Itallan Restaurant" only works on Map screen. (See the Navigaition System manual for a complete list of allowed voice commands for the information being displayed).
  - Close the windows and sunroof.
  - Set the fan speed to low (1 or 2).
  - Adjust the air flow from the air conditioning vents so that they do not blow against the microphone on the celling.
  - Pause after pressing the TALK button then give a voice command clearly in a natural speaking voice. If the system cannot recognize your command, speak louder.
  - If the microphone picks up voices other than yours, the system may not interpret your voice commands correctly.
  - If you speak a command with something in your mouth, or your voice is too husky, the system may misunderstand your command.
- Always check the connectors for poor connections or loose terminals.
- Check for a loose roof console microphone; if it's loose, tighten it.
- Before troubleshooting, write down the customer's XM radio channel presets, and get the radio and navigation system anti-theft codes.
- After troubleshooting, enter the radio and navigation system anti-theft codes, and the XM radio channel presets.

1. Use the HDS to check for HFL DTCs. Troubleshoot and resolve any HFL problems before continuing.

   Are there any HFL DTCs?

   YES – Perform the troubleshooting for the DTC indicated. ■

   NO – Go to step 2.

(cont'd)

Protected by

Symptom Troubleshooting (cont'd)

2. Go into the Diagnostic mode and use the "Mic Level" diagnostic the under Functional Setup (see page 22-525) to check the operation of the TALK and BACK buttons.

   Are the TALK and BACK buttons operational?

   YES – Go to step 8.

   NO – Go to step 3.

3. Disconnect the HFL-voice control switch and test it (see page 22-451).

   Did the switch test OK?

   YES – Go to step 4.

   NO – Replace the HFL-voice control switch. ■

4. Disconnect audio unit connector C (26P) and navigation unit connector B (14P).

5. Check for continuity between HFL-voice control switch 5P connector terminal No. 2 and audio unit connector C (26P) terminal No. 7.

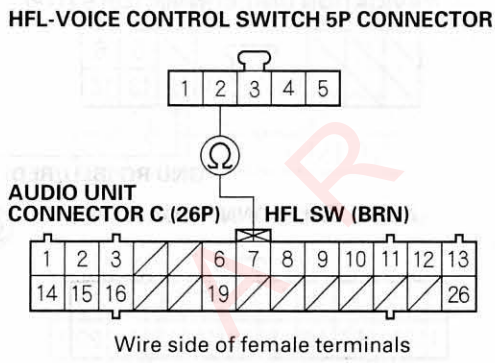

   Is there continuity?

   YES – Go to step 6.

   NO – Repair open in the wire in the harness, or replace the cable reel. ■

6. Check for continuity between HFL-voice control switch 5P connector terminal No. 1 and navigation unit connector B (14P) terminal No.10.

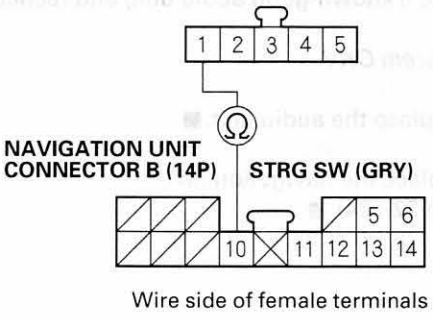

   Is there continuity?

   YES – Go to step 7.

   NO – Repair open in the wire in the harness, or replace the cable reel. ■

Protected by KR

7. Check for continuity between body ground and HFL-voice control switch 5P connector terminals No. 1 and No. 2.

HFL-VOICE CONTROL SWITCH 5P CONNECTOR

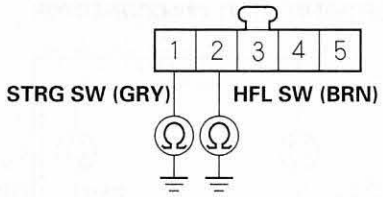

Wire side of female terminals

Is there continuity?

YES – Repair short to body ground in the wire harness, or replace the cable reel. ■

NO – Replace the navigation unit. ■

8. Use the "Mic Level" diagnostic under Functional Setup (see page 22-525) to check the operation of the microphone.

Is the microphone operational?

YES – Check the operation of the voice control system (see the Navigation System Manual). ■

NO – Go to step 9.

9. Check for continuity between navigation unit connector B (14P) terminal No. 6 and No. 14, and the hansfreelink unit 22P connector terminal No. 21 and No. 22.

NAVIGATION UNIT CONNECTOR B (14P)

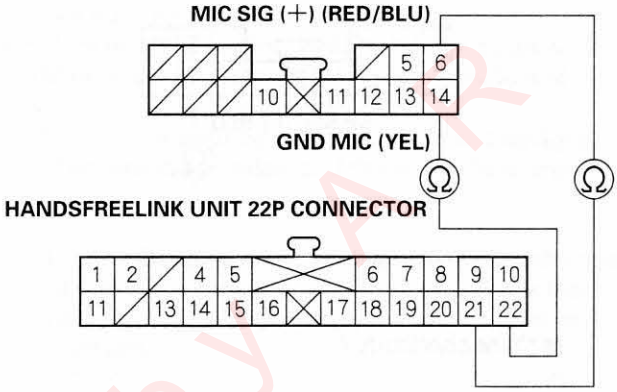

Wire side of female terminals

Is there continuity?

YES – Go to step 10.

NO – Replace the affected shielded harness between the navigation unit and HFL unit. ■

10. Check for continuity between body ground and navigation unit connector B (14P) terminal No. 6 and No. 14 individually.

NAVIGATION UNIT CONNECTOR B (14P)

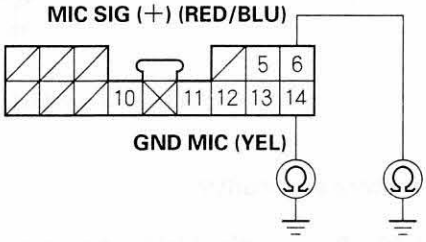

Wire side of female terminals

Is there continuity?

YES – Replace the shielded harness between the navigation unit and HFL unit. ■

NO – Go to step 11.

(cont'd)

Protected by AR

Symptom Troubleshooting (cont'd)

11. Check for continuity between the navigation unit connector B (14P) terminal No. 13 and body ground.

NAVIGATION UNIT CONNECTOR B (14P)

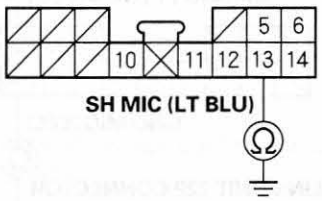

Wire side of female terminals

Is there continuity?

YES – Replace the shielded harness between the navigation unit and HFL unit. ■

NO – Go to step 12.

12. Check for continuity between the handsfreelink unit 22P connector terminal No. 20 and body ground.

HANDSFREELINK UNIT 22P CONNECTOR

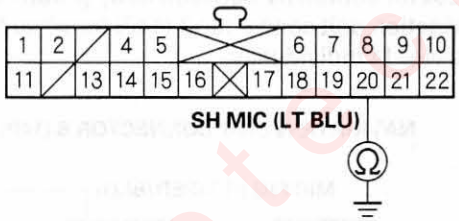

Wire side of female terminals

Is there continuity?

YES – Replace the shielded harness between the navigation unit and HFL unit. ■

NO – Go to step 13.

13. Disconnect the roof console 22P connector (see page 22-445).

14. Check for continuity between the handsfreelink unit 22P connector terminal No. 10 and terminals No. 9 and No. 8.

HANDSFREELINK UNIT 22P CONNECTOR

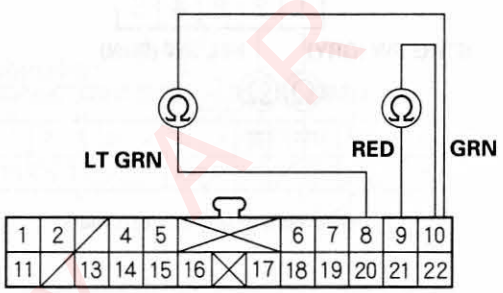

Wire side of female terminals

Is there continuity?

YES – Replace the shielded harness between the HFL unit and the roof console. ■

NO – Go to step 15.

Protected by AR

15. Check for continuity between the appropriate HFL unit 22P connector terminals and the roof console 20P connector terminals.

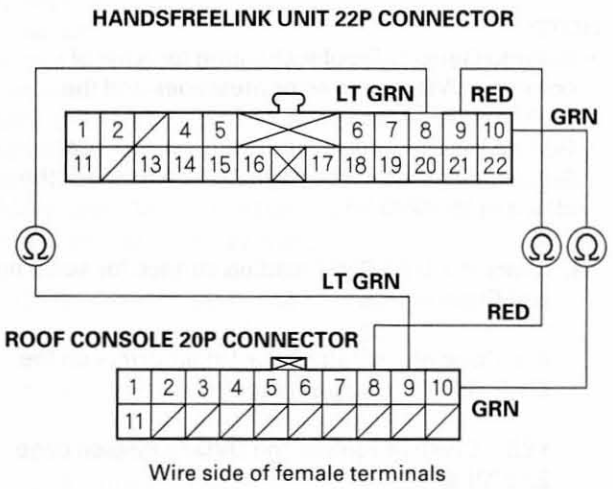

Wire side of female terminals

Is there continuity?

YES – Replace the roof console. ■

NO – Replace the shielded harness between the HFL unit and the roof console. ■

Touch screen button malfunction

Diagnostic Test: Monitor Check

NOTE:
- Always check the connectors for poor connections or loose terminals.
- Before troubleshooting, write down the customer's XM radio channel presets, and get the radio and navigation system anti-theft codes.
- After troubleshooting, enter the radio and navigation system anti-theft codes, and the XM radio channel presets.

1. Go into the Diagnostic mode and use "Touch Panel Check" diagnostic the under Monitor Check (see page 22-518) to check the operation of the touch switches.

   Do the switches operate normaly?

   YES – The system is OK at this time. ■

   NO – Replace the display panel control unit (see page 22-438). ■

Protected by AR

Symptom Troubleshooting (cont'd)

Cursor constantly leaves road

Diagnostic Test: Yaw Rate and Car status

1. Check the GPS icon on the navigation picture.

   Is the GPS icon white?

   YES – Do the troubleshooting for GPS icon is white (see page 22-499).■

   NO – Go to step 2.

2. Go into the Diagnostic mode and use the "Yaw Rate" diagnostic (see page 22-524) to check the yaw rate sensor.

3. Go into the Diagnostic mode and use the "Car Status" diagnostic (see page 22-521) to check the vehicle speed pulse.

   Are the yaw rate sensor and vehicle speed pulse OK?

   YES – The problem may be normal. Check to see if the problem occurs in the same place in a known-good vehicle. If it does, the problem could be in the database. Go to step 4.

   NO – If the problem is the yaw rate sensor, replace the navigation unit (see page 22-534). If the problem is the vehicle speed pulse, troubleshoot the vehicle speed signal circuit. BLU/WHT wire for open or short. If OK, swap a known-good ECM/PCM. If the problem or symptom goes away, replace the original ECM/PCM.■

4. Substitute a known-good navigation unit and check to see if the problem occurs in the same place.

   Does the problem occur in the same place?

   YES – The problem is in the database. Report the problem according to the Navigation System Owner's Manual under "Reporting Errors".■

   NO – Replace the navigation unit (see page 22-534).■

DVD screen error messages

Diagnostic Test: Car Status

NOTE:
- Refer to General Troubleshooting for a list of common DVD screen error messages and the probable cause (see page 22-532).
- Go into the Diagnostic mode and use the "Car Status" diagnostic (see page 22-521) to check the status of the DVD lid.

1. Check the DVD-ROM reading surface for scratches and finger prints.

   Are there any scratches or finger prints on the DVD-ROM reading surface?

   YES – Clean or replace the DVD-ROM (see page 22-533).■

   NO – If the problem occurs occasionally when the system is cold, this is normal. If the problem occurs frequently when driving, replace the navigation unit (see page 22-534).■

Protected by APS

Voice control cannot control A/C

NOTE:
- Always check the connectors for poor connections or loose terminals.
- Before troubleshooting, get the navigation system anti-theft codes.
- After troubleshooting, enter the navigation system anti-theft codes.
- Verify that the correct navigation unit is instakked for this model. Go into the Diagnostic mode and use "Version" (see page 22-529).

1. Go into the Diagnostic Mode and use the "Navi System Link" check (see page 22-515).

   Is "Air-con" icon red?

   YES – Do the climate control system troubleshooting. ■

   NO – Check for an open or short to ground between display panel control unit connector B (5P) terminals No. 1, No. 2, No. 3, No. 4, No. 5, and climate control unit connector A (20P) terminals No. 2, No. 4, No. 11, No. 12, No. 13. If OK, check the climate control system for normal operation. If the climate control system works properly, substitute a known-good display unit and recheck. ■

Display day/night mode does not work

NOTE:
- Always check the connectors for poor connections or loose terminals.
- Before troubleshooting, get the navigation system anti-theft codes.
- After troubleshooting, enter the navigation system anti-theft codes.

1. Change the day/night mode to auto mode under Set-up, and recheck.

   Does the display change to day and night modes?

   YES – The system is OK at this time. ■

   NO – Go to step 2.

2. Go into the Diagnostic Mode and use diagnostic the "Car Status" diagnostic to check for an ILL signal (see page 22-521).

   Is the "ILL" signal OK?

   YES – The system is OK. ■

   NO – Check the ILL + circuit for an open or short to ground between navigation unit connector A (20P) terminal No. 5 and passenger's under-dash fuse/relay box connector I terminal No. 2. If OK, substitute a known-good navigation unit and recheck. ■

Protected by AR

Symptom Troubleshooting (cont'd)

System locks up constantly

1. Start the engine and turn the ignition switch OFF, then turn the ignition switch ON (II).

   Does the system reboot?

   YES – The system is OK at this time. ■

   NO – Check the DVD for scratches or damage and the navigation unit for water damage. If OK, go into the Diagnostic mode and do all of the "Unit Check" diagnostics (see page 22-519). ■

Vehicle icon wanders across the map when driving (does not follow a displayed road) or spins when driving

NOTE:
- This is not the same condition as when driving off-road (or on a fire or logging road).
- This condition is caused by a loss of map matching from a bad sensor input. Check for aftermarket or other objects that can block the GPA signal. Always perform Map matching (see page 22-459) before proceeding with the troubleshooting.

1. Go into the Diagnostic mode and do the Navi System Link diagnostic (see page 22-515), the Navi ECU diagnostic under "Unit Check" (see page 22-519), the Car Status check (see page 22-521), the GPS Information check (see page 22-522), the GPS Detail check (see page 22-523), and the Yaw Rate check (see page 22-524).

   Are all the tests OK?

   YES – The system is OK at this time. ■

   NO – Repair the affected system. If the problem persist, swap a known-good navigation unit and monitor the condition. ■

Protected by A2C

Navigation drives by itself when parked

NOTE:
- Always check the connectors for poor connections or loose terminals.
- Before troubleshooting, get the navigation system anti-theft codes.
- After troubleshooting, re-enter the anti-theft code, and re-initialize the navigation system.

1. Start the engine.

2. From the main menu, select places, then select any destination, and begin the trip.

3. With the vehicle parked, watch the vehicle icon on the display.

   Does the vehicle position icon move by itself?

   YES – Go to step 4.

   NO – The system is OK at this time. ■

4. Go into the Diagnostic mode and select "Demonstration", under Functional Setup.

   Is "Demonstration Mode" set to "Yes"?

   YES – Set the Demonstration mode to "NO". ■

   NO – Replace the navigation unit (see page 22-534). ■

Navigation Stays on with ignition switch off

NOTE:
- Always check the connectors for poor connections or loose terminals.
- Before troubleshooting, get the navigation system anti-theft codes.
- After troubleshooting, re-enter the anti-theft code, and re-initialize the navigation system.

1. With the key out of ignition.

   Does the navigation screen stay on?

   YES – Go to step 2.

   NO – The system is OK at this time. ■

2. Check for a short to power on the navigation unit connector C (8P) terminal No. 2.

   Is there a short?

   YES – Troubleshoot the ACC circuit. ■

   NO – Replace the navigation unit (see page 22-534). ■

Protected by A R

Symptom Troubleshooting (cont'd)

Navigation cannot control audio/disc

Diagnostic Test: Navi System Link

1. Make sure the anti-theft code for the audio system is entered.

2. Go into the Diagnostic mode and use the "Navi System Link" diagnostic (see page 22-515).

   Is the "Radio" icon red?

   YES – Do the troubleshooting for the voice guidance cannot be heard (see page 22-499).

   NO – Go to step 3.

3. Substitute a known-good navigation unit (see page 22-534), and recheck.

   Can the navi control audio/disc?

   YES – Replace the navigation unit (see page 22-534). ■

   NO – Do the audio system troubleshooting. ■

Audio-HVAC Subdisplay-clock does not work properly

1. Check the connections at the audio-HVAC subdisplay-clock 10P connector and the display panel control unit connector E (22P).

   Are the connections and terminals connected properly?

   YES – Go to step 2.

   NO – Repair the connection and recheck. ■

2. Disconnect the audio-HVAC subdisplay-clock 10P connector and display panel control unit connector E (22P).

3. Check for continuity between the audio-HVAC subdisplay-clock 10P connector and the display panel control unit connector E (22P) terminals for each wire listed in the chart.

Wire	Audio-HVAC subdisplay-clock 10P connector terminal	Display panel control unit connector E (22P) terminal
BLU/ORN	2	E20
YEL/RED	4	E22
YEL	5	E21
BLU/RED	6	E10
BLU	7	E9
BRN/BLK	8	E8
BLU	9	E19
RED/BLU	10	E18
BLK	1	(Body ground)

   Is there continuity?

   YES – Go to step 4.

   NO – Repair the open in the wire between the display panel control unit and the audio-HVAC subdisplay-clock. ■

Protected by AR

4. Check for continuity between each audio-HVAC subdisplay-clock 10P connector terminal and body ground.

Wire	Audio-HVAC subdisplay-clock 10P connector terminal
BLU/ORN	2
YEL/RED	4
YEL	5
BLU/RED	6
BLU	7
BRN/BLK	8
BLU	9
RED/BLU	10
BLK	1

Is there continuity?

YES – Replace the shielded harness between the display panel control unit and the audio-HVAC subdisplay-clock. ■

NO – Go to step 5.

5. Check the same wires for continuity to terminal No. 8 (BRN/BLK) wire of the audio-HVAC subdisplay-clock 10P connector.

Is there continuity?

YES – Replace the shielded harness between the audio-HVAC subdisplay-clock and the display panel control unit. ■

NO – Go to step 6.

6. Substitute a known-good audio-HVAC subdisplay-clock and recheck.

Does the subdisplay work properly?

YES – Replace the original audio-HVAC subdisplay-clock. ■

NO – Substitute a known-good display panel control unit and retest. If the problem is gone, replace the original display panel control unit. ■

Protected by A

Symptom Troubleshooting (cont'd)

Navigation does not call using the HFL

Diagnostic Test: Navi System Link

1. Make sure the cell phone is paired to the HFL (see page 22-441) and working properly (see page 22-440).

   Is the cell phone paired?

   YES – Go to step 2.

   NO – Pair the cell phone to the HFL and retry. ■

2. Go into the Diagnostic Mode and use the "Navi System Link" diagnostic (see page 22-515).

   Is the "HFL" icon red or flickering?

   YES – Go to step 3.

   NO – Go to step 6.

3. Disconnect navigation control unit connector F (5P) and the HFL unit connector (22P).

4. Check for continuity between navigation control unit connector F (5P) terminals and HFL unit connector (22P) terminals according to the table.

Navigation Control Unit Connector (5P)	HFL Unit Connector (22P)	Wire color
F1	5	ORN/BLU
F2	15	BLU/GRN
F3	16	BLU/YEL
F4	17	WHT/BLU
F5	18	BRN

   Is there continuity?

   YES – Go to step 5.

   NO – Replace the shielded harness. ■

5. Check for continuity between the navigation control unit connector F (5P) terminals and body ground according to the table.

Navigation Control Unit Connector F terminals	Wire color
F1	ORN/BLU
F2	BLU/GRN
F3	BLU/YEL
F4	WHT/BLU
F5	BRN

   Is there continuity?

   YES – Replace the shielded harness. ■

   NO – Go to step 6.

6. Substitute a known-good HFL control unit and reset.

   Is the system OK?

   YES – Repair the original HFL control unit. ■

   NO – Replace the navigation unit. ■

Protected by A R

Navigation cannot control XM radio

Diagnostic Test: Navi System Link

1. Make sure the anti-theft code for the audio system is entered.

2. Go into the Diagnostic mode and use the "Navi System Link" diagnostic (see page 22-515).

   Is the "XM" icon red?

   YES – Do the troubleshooting for the voice guidance cannot be heard (see page 22-499)

   NO – Go to step 3.

3. Substitute a known-good navigation unit (see page 22-534)

   Can the navi control XM radio?

   YES – Replace the navigation unit (see page 22-534). ■

   NO – Do the audio system troubleshooting. ■

Protected by AR

System Diagnosis Mode

Start-up procedure and Diagnosis Menu

There are two ways to enter the diagnostic mode:

1. Connect the SCS connector (see page 22-533) to the navigation service connector located in the trunk. Turn the ignition switch to the ON (II) position. The display will go derectly to the diagnostic menu screen shown below.

   NOTE: When finished troubleshooting, make sure to remove the SCS connector.

2. Turn the ignition switch ON (II).
   Use the navigation display hard buttons as described below:

   A. If the battery has not been disconnected, then press and hold the 3 buttons (Menu, Map/ Guide, and Cancel), and keep them pressed for approximately 5 seconds. The display screen will go directly to the "Select Diagnosis Items" menu shown below.

   B. If the battery was disconnected and reconnected prior to this test, hold down the Menu and Zoom Out buttons at the "Code" or "GPS Acquire" screen. The display will go to the "Navi System Link" screen. Push the joystick to go to the "Functional Setup menu," then touch the Return icon to get to the "Select Diagnosis Items" menu.

      NOTE: This only allows access to the diagnostic screens. All other navigation functions are disabled.

DIAGNOSTIC MENU SCREEN

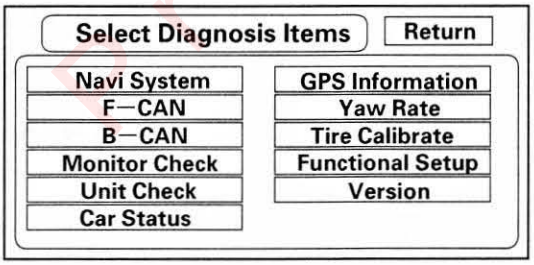

3. After the display changes to the Select Diagnosis Items menu, select the item you want to check and the diagnostic will start. To return to the previous screen, select "RETURN".

   - Navi System (Link)
   - F-CAN (System link)
   - B-CAN (System link)
   - Monitor Check
   - Unit Check
   - Car Status
   - GPS Information
   - Yaw Rate
   - Tire Calibrate
   - Functional Setup
   - Version

Protected by AR

Navi System Link

- This diagnostic tests the cables connecting the navigation components. Ensure that the ignition switch is in the ON (II) position. When the diagnostic begins, a "bong" sound is heard. The system is in a "Detecting" mode, and is waiting for all items in white to be tested. This includes the navigation voice control (TALK/BACK) buttons, and microphone. Press the navigation TALK button on the steering wheel, and in a normal voice, say "testing". The Talk indicator on the screen should become green, and the voice level indicator should move to at least the 6th bar to pass. Next, press the navigation BACK button. This should cause the "Cancel" indicator to go green.
- If all of the communication lines connecting the system components, and the navigation TALK/BACK buttons/microphone check out OK (all block diagram items green), then the "OK" indicator will become green.
- If there is a problem with the system, the faulty system component item will change to red, and the screen will show "NG" in red. Use the troubleshooting index, and other diagnostic screens to help locate the problem.
- The indication on the screen will not change until the ignition switch is cycled. After repairing the affected cable or system, repeat this diagnostic.

  NOTE: Green boxes and green "OK" indicate that the communications lines (cables) are intact. This diagnostic does not necessarily imply that the individual components are functioning properly. For instance, the GPS antenna wire may be crushed, but still show as "green" . A road test, or other diagnostic may be necessary to find the problem.

- This navigation system is designed for use in the US or Canada maket.
  - US Market: English is the only language choice.
  - Canada Market: On the disclaimer screen, English or French can be selected.
  - Touch the "Chg Canada" or "Chg US" button to select the desired choice.
- Select "Return" to return to the Diagnosis Menu.

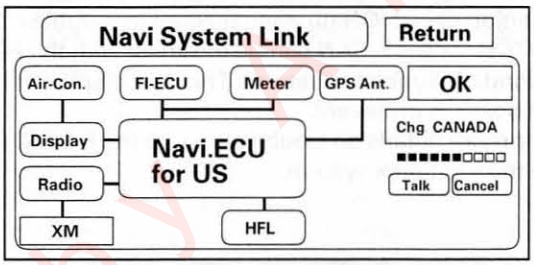

NOTE:
- The mic level indicator must reach the 6th bar or greater to pass the test.
- If the XM link is red or flashing red, go to audio system symptom troubleshooting (see page 22-400).

(cont'd)

System Diagnosis Mode (cont'd)

F-CAN System Link

F-CAN (Fast Controller Area Network) passes information between processors on the network. For example, the F-CAN network is used to pass charge signal between the PCM and the navigation unit for the trip computer cooling fan function. The F-CAN network uses a communication protocol that transmits data at 500 Kbps.

- If the diagnostic screen below reads NG with the ignition switch ON (II), then diagnostic trouble codes (DTCs) for the F-CAN can be retrieved with the HDS (Honda Diagnostic System). The data displayed in the ID boxes is irrelevant.
- For more details on troubleshooting the F-CAN, refer to the multiplex system.

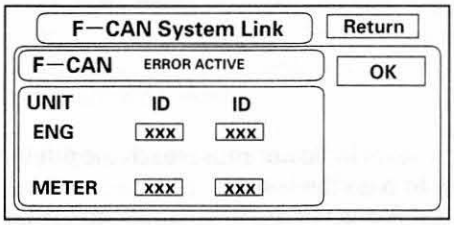

B-CAN System Link

B-CAN (Body Controller Area Network) communication moves at a slower speed for convenience related items, and for other functions.

- If the diagnostic screen below reads NG, then diagnostic trouble codes (DTCs) for the B-CAN can be retrieved with the HDS (Honda Diagnostic System). The data displayed in the ID boxes is irrelevant.
- For more details on troubleshooting the B-CAN, refer to multiplex system.

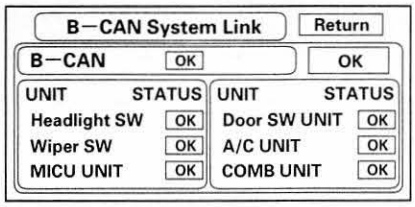

Monitor Check

Overview of display unit

- The display unit communicates with the navigation unit over its own GA-Net bus. Information is sent to the navigation unit whenever the user activates the touch screen, or buttons. Information sent by the navigation unit to the display unit includes commands to control the LCD back light.
- The navigation unit also sends navigation and rear camera video information to the screen using the Red, Green, Blue, and Composite Video signals.
- The display unit is protected by the security system by daisy-chaining the security signal through it, and then passing the signal to the audio unit.
- The illumination input from the gauge brightness control provides back lighting for the buttons surrounding the screen.
- The display unit also communicates with the climate control unit to set the A/C mode and fan speed, and to receive the outside temperature that is displayed on the A/C-INFO screen.

These screens allow troubleshooting of the display unit. Select the item you want to troubleshoot, and follow the diagnostic instructions.

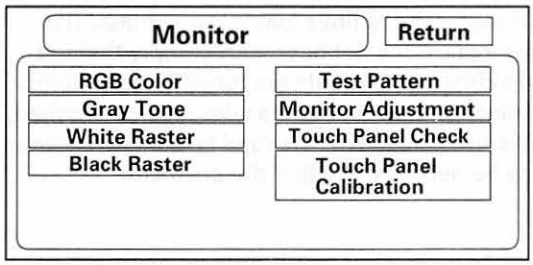

Protected by

RGB Color
This screen verifies that the display unit is receiving the video (R, G, B and Composite sync) signals properly. The three primary colors should all be shown without distortion. The combination of all three should produce a central white section. If any of the colors are missing, troubleshoot for the color signal (see page 22-491). If the picture has lines in it or scrolls horizontally, or vertically, troubleshoot for a Composite sync problem (see page 22-493).

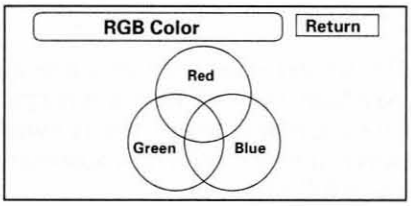

Gray Tone
This screen diagnoses problems with contrast. You should be able to see the changes from bar to bar across the scale. It is normal for the 2 bars on either side to appear the same.

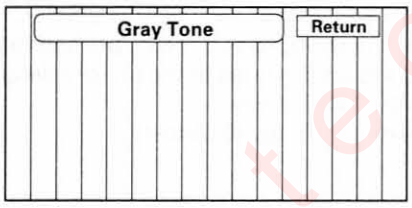

White Raster
The entire display must be shown in white.

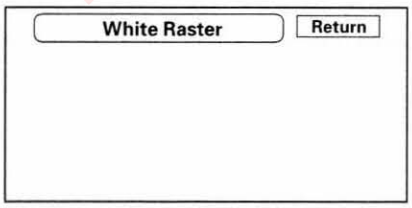

Black Raster
The entire display must be shown in black.

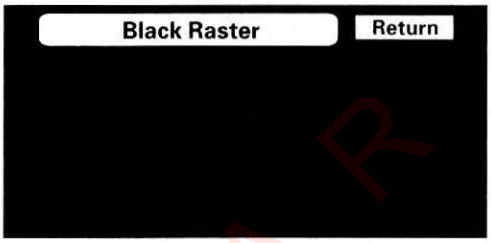

Test Pattern
The chart below shows the colors being used for the map and menu screens. This is for factory use only. To check the color signal use the "RGB Color" diagnostic found under the Monitor Check.

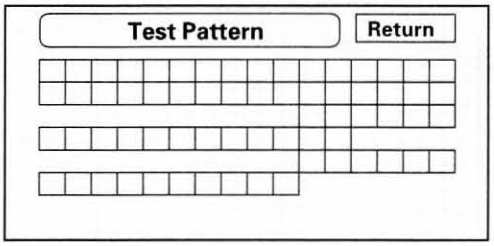

Monitor Adjustment
This allows the navigation display to be centered. Use the joystick to move the picture up/down or left/right. It is unlikely that you will ever need to adjust the monitor position. The "Default" button will reset the display position to factory specifications.

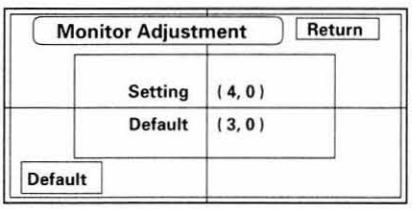

(cont'd)

Protected by AR

System Diagnosis Mode (cont'd)

Touch Panel Check

The panel touch sensing system consists of a touch sensitive resistive membrane covering the display. Contrarly to other systems using infrared beams, the screen has to be physically "touched" to make it work. The display has capability of an almost infinite number of touch locations. However, to be compatible with earlier systems, the software only senses the locations shown on the diagnostic screen below. Every possible touch button position is shown on this diagnostic screen. Touching one of these areas should cause its color to reverse, and sound a "beep". If the touch locations are off slightly (by less than one touch location), use the "Touch Panel Calibration" diagnostic to re-align the touch "zones" with the screen image. If any areas of the screen either don't respond, or respond at some other location when touched, then replace the display unit.

NOTE: Unlike earlier screens that used infrared sensors, direct sunlight will not affect this test.

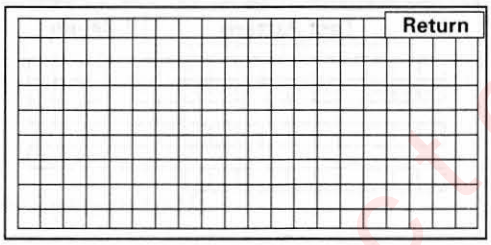

Touch Panel Calibration

The display screen uses a touch sensitive membrane instead of fixed infrared "beams". This means that every location of the entire surface of the display is touch sensitive.
For the display to be compatible with earlier navi systems, the system software creates "touch zones" emulating the touch "switches" created by the intersections of 20 vertical and 9 horizontal infrared beams. This diagnostic allows alignment of these artificially created "zones" with the location of the buttons images on the screen.

Normally this should never need adjustment, and it used only to adjust the touch locations for parallax (the touch locations appear different when viewed at an angle). However if an adjustment is necessary, the procedure is as follows:

- The screen consists of four test areas consisting of a "+" button and an adjacent box with a black border. Touch the four "+" buttons to verify alignment. If when you touch a "+" button, the adjacent box becomes yellow, then perform the following. Continue to hold the "+" button, and simultaneously move the joystick to shift the screen slightly from side to side or up and down. The adjustment is complete when you can touch all four "+" boxes and not see any of the adjacent boxes become yellow.
- To store any changes you make, push in the joystick.
- To reset the touch zones to the factory default touch the MAP/GUIDE button.
- Use Return to exit the diagnostic.

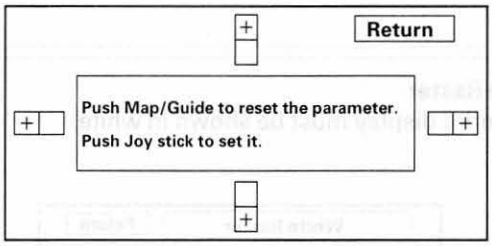

Protected by A

Unit Check

Select the item you want to check and the diagnostic starts.

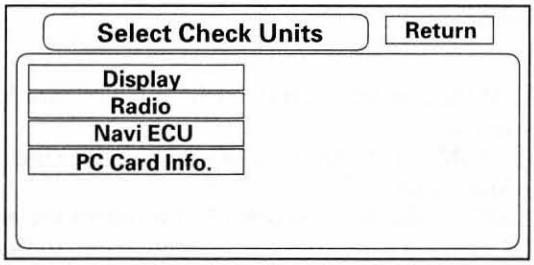

Display

This diagnostic performs additional checks on the communication bus between the control unit and the display. In addition, the internal electronics and touch screen functionality are confirmed.

- When the connection is NG, first check for loose terminals at the navigation unit and the display unit connections. Next check for an open or short in the communication line between the navigation unit and the display unit. If the line is found to have an open or short, replace the affected shielded harness.
- If the ROM or RAM is NG, replace the display unit.
- Touch sensor checks the functionality of the touch screen.
- The version represents the software version in the display.

NOTE: When selecting this diagnostic from "Unit Check," quickly remove your fingers from the touch-screen to avoid a false detection.

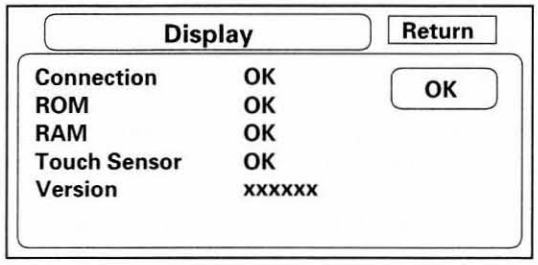

(cont'd)

Protected by

System Diagnosis Mode (cont'd)

Radio
If the NG is indicated, check for loose audio unit connector.

NOTE: If the XM link was displayed red, but the radio link was displayed green in the navigation system link, refer to audio system symptom troubleshooting (see page 22-400).

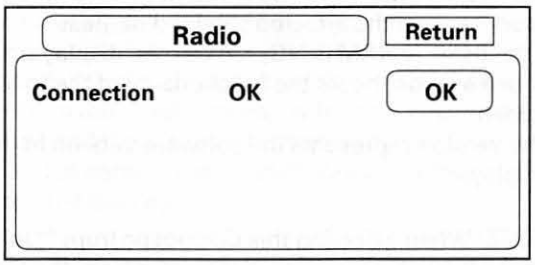

Navi ECU
This screen looks for problems the navigation unit. When this diagnostic is initiated, there is a delay of up to a minute while it runs.

NOTE: Do not try to end this diagnostic by pressing "OK" or "Mem Clr" before it finishes, otherwise the system will reboot.

- "ROM (Application)", and "ROM (Loader)" are for factory use.
- If "V-RAM" or "D-RAM" is NG, then replace the navigation unit.
- If "GPS" indicates "NG (ANT)", then check the entire GPS antenna wire from the navigation unit to the antenna. If the wire is crushed or damaged, try a known good antenna. If this diagnostic reads OK, then order a new GPS antenna. If the diagnostic still reads NG (ANT), then replace the navigation unit.
- "DVD ROM" represents the database version on the DVD. This information can also be found in Setup Screen 4 by Selecting System Information.
- "Serial No." should be the same as the serial number found on the underside of the navigation unit. This number is needed to obtain the security code from the Interactive Network (IN) system.
- The Mem Clr is for factory use and should not be used unless instructed by the factory.
  Selecting this will erase the customer's settings, personal information, GPS orbital data, and anything else stored in memory.

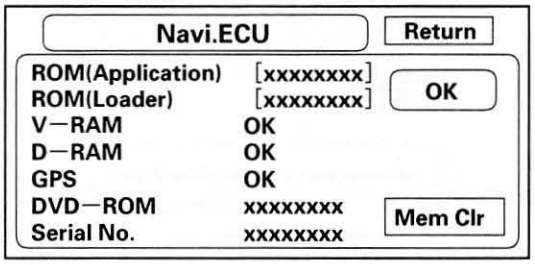

Protected by CARP

PC Card info.
There is no PC Card in the PC slot, and the screen should say, "PC Card is not inserted".

NOTE: Do not insert any card or object into the slot.

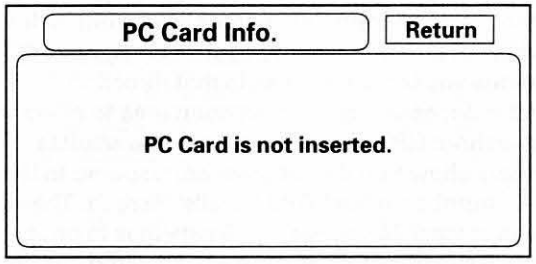

If the factory provides a PC card and instructs you to insert a card, then the screen displays the Manufacturer, and Product Name as shown in the following screen.

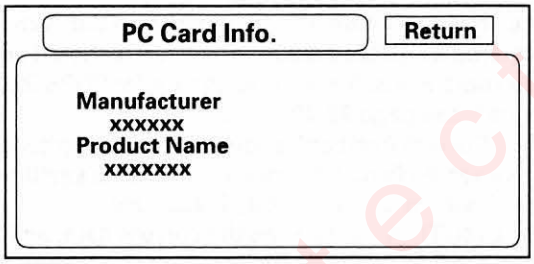

Car Status

This screen is used to confirm that navigation unit is properly receiving input signals. Signals equal to (0) are OFF, and signals equal to (1) are ON. If the value on the display does not match the actual vehicle status, then check the wire carrying the signal.

- CHG-(OBSELETE-NOT USED) Charge indicator (Pin 3 of C-connector)
  a) OFF (0) when engine is off, or alternator is not charging
  b) ON (1) when engine is running

This signal was used by the previous DVD navigation system. If CHG was off, then the screen was shut off after 10 minutes of inactivity to minimize battery consumption.

- VSP-Vehicle Speed Pulse from PCM (Pin 6 of C-connector)
  a) OFF (0) when vehicle is not moving
  b) ON (1) when vehicle is moving

The VSP comes from the PCM as a dedicated signal. Intermally, the navigation unit compares the actual VP on the map against street data to adjust the pulse to speed scaling factor. As this scaling factor becomes more accurate, the "Level" gradually increases from 0 to 10 (see the Tire Calibrate diagnostic screen).

- BACK-Reverse indication from taillight relay (Pin 5 of C-connector)
  a) OFF (0) when shift lever is in any position other than reverse
  b) ON (1) when shift lever is in reverse

The Back signal is used by the navigation unit to allow the map screen to show the VP moving backwards when in reverse. This signal is needed because the Speed Pulse has no direction indication.

(cont'd)

Protected by AR

System Diagnosis Mode (cont'd)

- CHG (CAN)-Charge indicator from PCM using F-CAN bus (Pin 8, 18 of navigation unit A-connector)
  a) OFF (0) when engine is off
  b) ON (1) when engine is running

This signal is obtained off of the F-CAN bus, and is used for navigation unit cooling fan function. For problems, perform F-CAN troubleshooting. Diagnostic trouble codes (DTCs) for the F-CAN can be retrieved with the HDS (Honda Diagnostic System).

- ILL-Illumination Indication
  (Pin 5 of navigation unit A-connector)
  a) OFF (0) when parking lights, or headlights are off
  b) ON (1) when parking lights, or headlights are off

This signal is used by the navigation unit to determine whether to put the navigation screen into the Day or Night brightness mode. (Setup screen 1)

- DVD Lid-senses if DVD door is open
  a) (Close) when door is closed
  b) (Open) when door is open

The navigation unit has a micro switch to detect this. If open is indicated when the door is closed, replace the navigation unit.

- PC Card Lid-Senses if PC Card door is open
  a) (Close) when door is closed
  b) (Open) when door is open

The navigation unit has a micro switch to detect this. If open is indicated when the door is slid shut, then replace the navigation unit. This slot is for insertion of PC Flash memory cards for gathering diagnostic information. This is for factory use only.

NOTE: If the Customer is complaining that the PC door open message appears, but the operation of the door appears to be normal. Take a piece of clear tape and cover the door latch handle to prevent accidental opening.

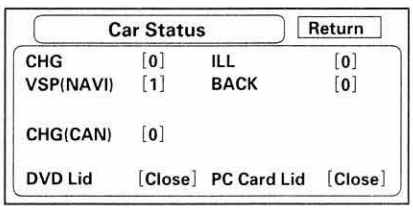

GPS Information

This screen shows the current status of GPS reception. The circular diagram shows the current location of the GPS satellites (yellow numbers) as they would appear in the sky. The outer circle represents the horizon (0 degrees elevation). The middle and inner circles represents 30 and 60 degrees respectively. The very center of the diagram (90 degrees elevation) is directly overhead. Naturally, nearby obstructions, like tall buildings will block satellites in that direction. That is why it is necessary to be in an open area to effectively troubleshoot GPS reception issues. The satellite numbers shown on the diagram correspoind to the "PRN" number in the "GPS Details" screen. There are always at least 24 "active" GPS satellites in orbit. Because satellites fail, and have to be removed from service, spares are always parked in orbit, ready to be activated. This is why the PRN (satellite ID number) can be greater than 24.

NOTE: To use this screen for troubleshooting, the vehicle should be out side away from buildings, tall trees, and high-tension wires for at least 10 minutes with the engine running.

- The "Number of Satellites" box shows the number of acquired satellites (maximum of 12). It should contain 3 or more icons. If not troubleshoot for "GPS icon is white" (see page 22-499).
- The "Current Position" shows latitude, longitude, and elevation (in feet). If there are less than 3 satellites, the elevation can be grossly inaccurate.
- The Date/Time field shows the current date, and also a time that includes daylight savings and other offsets entered by the customer in Setup screen 2 "Adjust Time Zone/Clock".

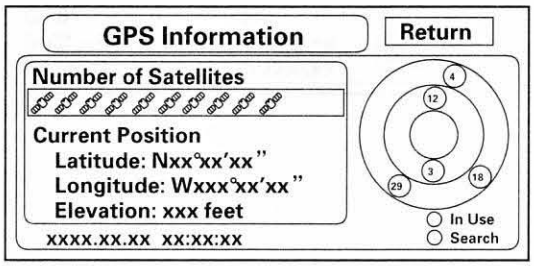

GPS Detail

By pressing and holding the MENU button for 10 seconds, a GPS Detail screen is displayed. This screen displays real time incoming satellite positional data when the vehicle is outside in the open. The information shown on this screen is for factory use.

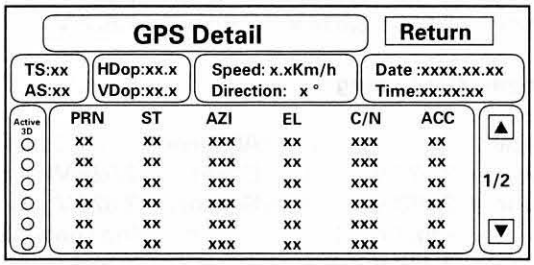

- The box TS/AS and HDop/VDop is for factory use.
- The Speed and Direction information is updated in real time when driving.
- The Date/Time Information is the same as in Setup screen 2 "Adjust Time Zone/Clock".
- If the "3D" icon is shown above the yellow dots, this implies that at least 4 satellites are available for map positioning, and the "GPS" indicator on the map screen will be green. See the "Global Positioning System" detailed explanation in the "System Description".
- If the row of data in the table below begins with a "yellow dot", the AZI and EL fields can be used to locate each satellite on the circular GPS diagram (see prior screen).

NOTE: The data shown in the GPS Detail screen is an example only.

The table of values shown on the screen below has the following columns:

Column	Description	Problem indication
Active	Active satellites (Yellow Dot)	If "3D" or "2D" is missing when the vehicle is parked outside, follow GPS icon is white troubleshooting (see page 22-499).
PRN	The satellite ID number	
ST	The status: 0 = cannot view or searching, 2 = acquiring	If all 0, then, follow GPS icon is white troubleshooting (see page 22-499).
AZI	Azimuth, the angle (0 −360) clockwise from north	
EL	Elevation from the horizon (90 deg is overhead)	
C/N	N/A	Healthy signal is 49-52, no signal: 27-33
ACC	N/A	
△ 1/2 or 2/2 ▽	Shows view of all satellites in two screen views 1/2 or 2/2	

(cont'd)

Protected by AP

System Diagnosis Mode (cont'd)

Yaw Rate

This diagnostic checks the yaw rate sensor in the control unit. This device detects when the vehicle turns, and repositions the vehicle posion icon on the map screen. For more detailed information, see the yaw rate sensor theory of operation under "System Description".

- "Sensor" indicates the voltage output from the yaw rate sensor. It should indicate about 2.500 volts when stopped.
- "Offset" is the reference voltage or standard within the yaw rate sensor. It also should indicate about 2.500 volts when stopped.
- A "sensor" output voltage HIGHER than the "Offset" voltage indicates that the vehicle is turning to the right.
  A "sensor" output voltage LOWER than the "Offset" voltage indicates that the vehicle is turning to the left.
- The yaw rate offset, and sensor should both indicate about 2.500 volts when stopped. If either reads zero, or 5.000 volts, replace the navigation unit.
- The yaw rate offset and sensor should be within +/−0.01 V of each other when stopped. The sensor value should change relative to the offset as the car is turned while driving. If not, replace the navigation unit.

Example: Car stopped

Normal		**Abnormal**	
Offset	2.526 V	Offset	2.526 V
Sensor	2.516−2.536 V	Sensor	2.623 V

Example: Car turning

Normal		**Abnormal**	
Offset	2.526 V	Offset	2.526 V
Sensor	2.678 V (right turn) 2.478 V (left turn)	Sensor	2.623 V (no change on turns)

- Auto tuning should always be on. If it is off, turn it on.
- "Sensitivity study" represents the status of the internal tuning function. At initialization, this value starts at 6 and increases to # 10 as the internal correction values become more accurate.
- The settings "CCW Cal Factor", "CW Cal Factor", and "Set" are for factory use only. THIS SHOULD NEVER BE ADJUSTED.

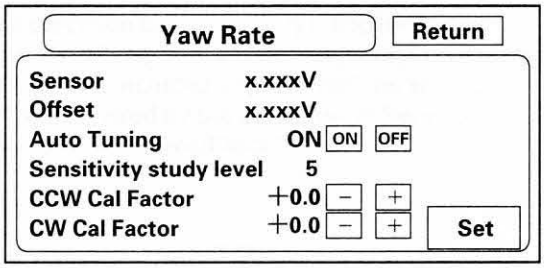

Protected by AR

Tire Calibrate

As the vehicle moves, the navigation system receives speed pulses from the PCM. These pulses are converted using a conversion factor to a mph speed that moves the vehicle position (VP) on the map. The navigation system has an internal tuning function that generates and refines this factor based on actual driving. The "Level" indicates the status of the tuning. At navigation initialization, it begins at 0, and increases to 10 as the navigation system is used.

- The "Auto Tuning" is factory set to "ON", and should remain on.
- The "LEVEL" indicates the tuning status. If it is less than 10, the unit is still calibrating.
- The "Tire-Cal. Tuning" and Set should not be used. It is for factory use only.

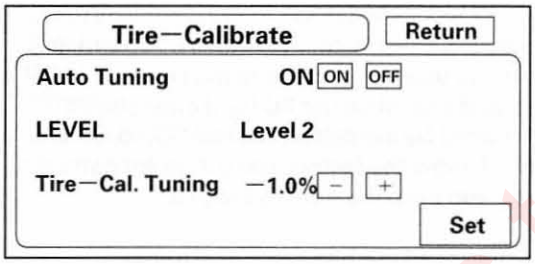

Functional Setup

Select the item you want to check.

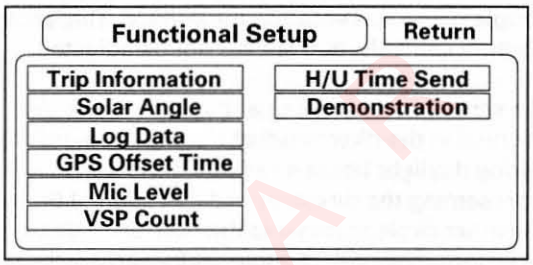

NOTE: Trip Information not available.

(cont'd)

Protected by AP

System Diagnosis Mode (cont'd)

Solar Angle
This screen is used to graphically display the sun's position as determined by GPS. The Navi System uses the sun's angle, along with the sunlight sensor to control the driver/passenger A/C air flow. The heat that must be removed by the A/C unit varies, depending on the angle of the sun entering the vehicle. This screen is for factory use only, and should not be adjusted.

- The screen shows a circular diagram of the sky oriented in the direction that the vehicle is pointing. During daylight hours a red dot is shown, representing the direction and elevation of the sun. The outer circle represents the horizon (0 degrees elevation). The middle circle is 30 degrees, the center circle is 60 degrees, and the very center is directly overhead (90 degrees).
- The "Auto button" should always be on (yellow).
- The "Angle", "Dir", and "Reliability" settings are used by the factory to simulate the sun's position for debugging this function.

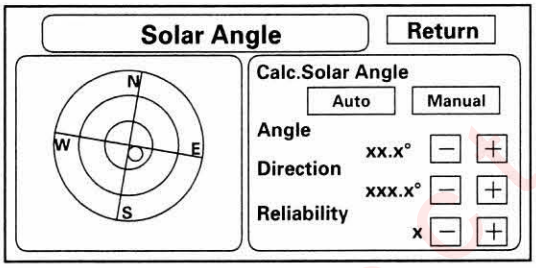

Log Data
This screen allows the factory to select log data to troubleshoot navigation system issues.

- Normally there is no card in the "PC Card Slot", and the PC slot door should always be closed. The screen should look like below.

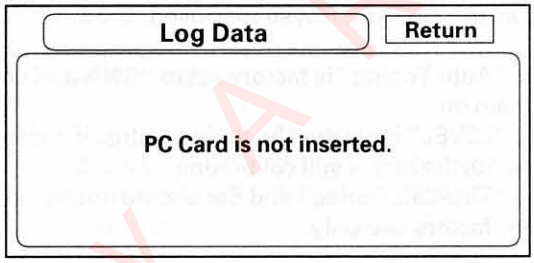

- However, if the factory provides a PC card and instructs you to insert it into the card slot (label side up), and then slide the PC Card door shut. If instructed by the factory, Select "Gyro. Sensor Logs ON". Follow the factory procedure for gathering test data, and properly ending the test.

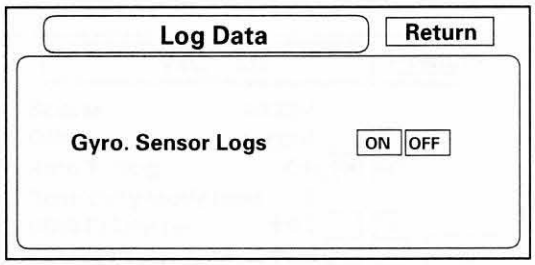

Protected by AR

GPS Offset Time

This screen is for factory use only. It allows adjustment of the GPS time. This display updates in real time.

- "GPS Time" is the time as received from the GPS satellites. It is in Greenwich Mean Time (GMT).
- "System Time" is the internal time used by the navigation unit to calculate your position on the map. It is also in Greenwich Mean Time (GMT).
- "Display Time" is the time shown on Setup screen 2 "Adjust Time Zone/Clock", and reflects any changes due to daylight savings time or time adjustments entered by the customer.
- Date, Hour, Minute, and "Set" should not be used.

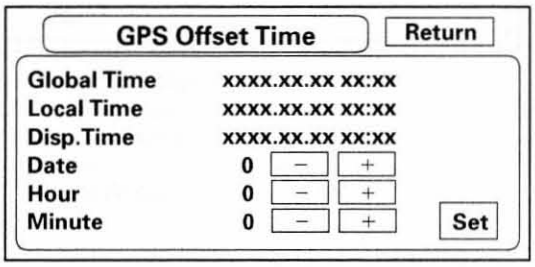

Mic Level

This diagnostic allows you to independently test the microphone and the TALK and BACK buttons. They are used to activate the voice control and HFL system. The microphone is located near the map light in the roof console. It is directional, and works best with the voice coming from the drivers seat.

- Press the TALK button on the steering wheel, and in a normal voice say "testing". The TALK indicator on the screen should momentarily become green, and the text "Now Recording..." should appear in yellow. In addition, the Mic Level indicator should on the screen does not briefly become green, then check the wiring from the steering wheel talk button to the navigation unit. If there is no "Mic Level" movement when you speak, then you should check the wires running from the microphone in the roof console to the HFL unit and the navigation unit. If the wires are OK, the microphone must be faulty; replace the roof console (see step 4 on page 20-71).
- Press the BACK button on the steering wheel. This should cause the Cancel indicator on the screen to momentarily become green. If it does not briefly change to green, then check the wiring from the steering wheel BACK button to the navigation unit.

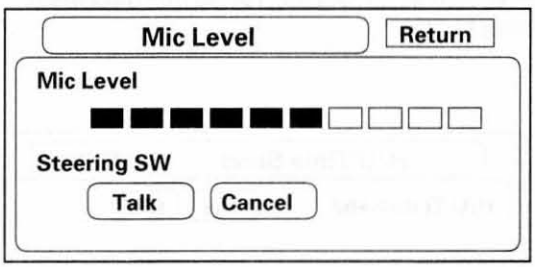

(cont'd)

Protected Page

System Diagnosis Mode (cont'd)

VSP Count
This screen displays the number of pulses per revolution of the tire. This is for factory use only, and should not be changed.

- "Pulse Count Setting" should always be set to "Auto".
- "VSP Count" should always be "4", and should never be adjusted or set to any other value.

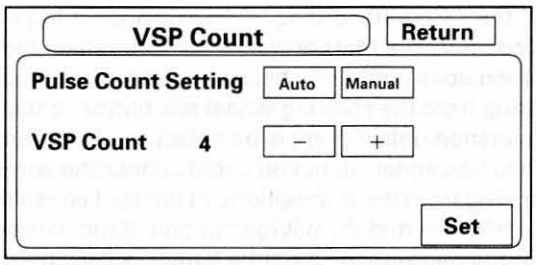

H/U Time Send
This screen determines whether to automatically send the navigation time to the audio-HVAC subdisplay. The audio-HVAC display panel connector C (10P) passes this information to the audio-HVAC subdisplay. The navigation time can be found in the Setup screen 2 "Adjust Time Zone/Clock" setting.

- "H/U Time Send" should always be set to "ON".

NOTE: Touching "Reset" on the Adjust Time Zone/ Clock screen automatically resets this diagnostic function to "ON".

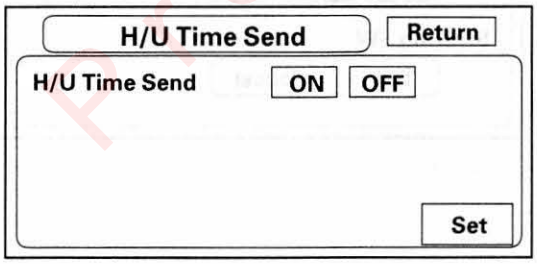

Demonstration
This screen is for factory use only, and should always be set to "OFF". Occasionally this setting is turned "ON" when vehicles are being used at Auto Shows or similar events. Turning this feature on, allows the navigation system to automatically follow a route to a destination when the vehicle is stationary.

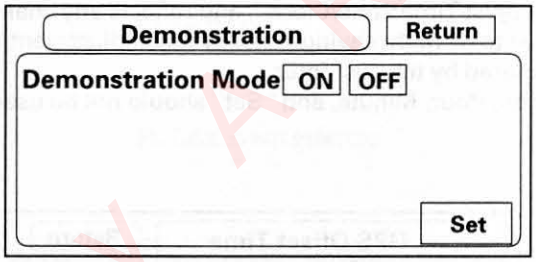

Protected by AR

Version

This screen displays the current version of the program, and allows the loading of a new version of the program either from a CD/DVD or from a PC card.

The D-RAM Program version should always be greater than or equal to the Disc Program version. The mapped database version is the date of the database on the DVD.

The Model code is 24H, and is for factory use only.

Do not use DISC LOAD or Card LOAD, unless instructed to do so by the factory.

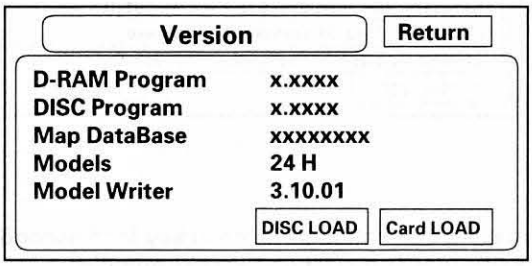

NOTE: If any model number other than 24H is displayed, replace the navigation unit with the correct parr. The model code tells the navigaition unit what software to load off the DVD.

Protected by AR

(cont'd)

System Diagnosis Mode (cont'd)

Developer Use Only

This section of the diagnostics is entered from the Select Diagnosis Items menu, by holding down the menu key for 5 seconds. The items in this section are for factory use only, and would not normally be used as part of your diagnostic procedure. Under some circumstances, the factory may request information from these screens.

Main Menu (For Developer)

The main menu choices are shown below.

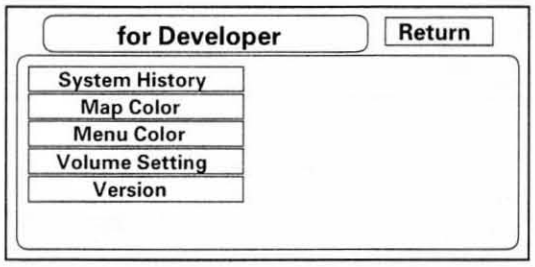

System History

This displays error conditions that have been logged during operation of the navigation system. Under some circumstances, the factory may request information from this screen.

NOTE: Never press the "Hist. Clr" touch screen button unless instructed by the factory.

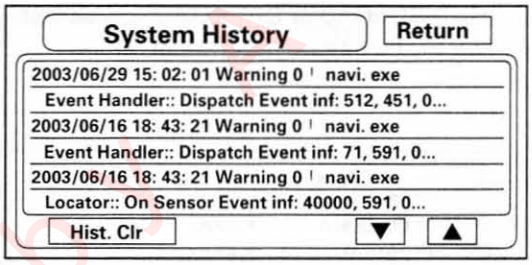

By pressing and holding the menu key for 5 seconds, the "System History Details" screen appears.

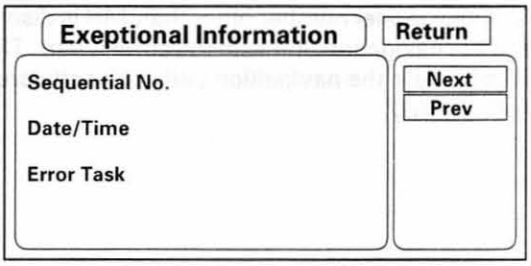

Protected by R

Map Color

This screen is used to temporarily adjust map colors for testing.

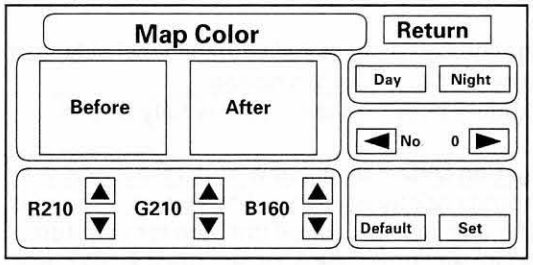

Menu Color

This screen is used to temporarily adjust menu colors for testing.

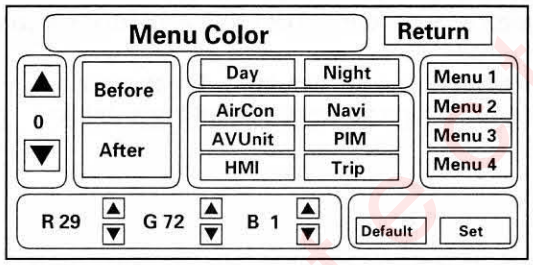

Volume Setting

This screen is used to temporarily adjust the volume for testing.

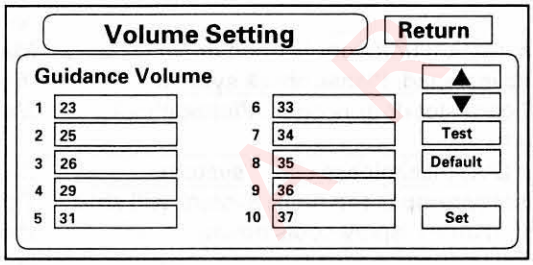

Version

These screens allow viewing of the system version information. This is the same information as viewed in the main diagnostic menu "Version" screen.

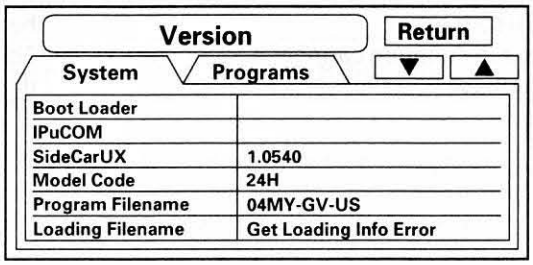

(cont'd)

Protected by KR

System Diagnosis Mode (cont'd)

Error Messege Table

Screen Error Message	Solution
Navigation system is unable to acquire a proper GPS signal.	Make sure there is nothing on the rear package tray blocking the GPS antenna. If not, move the vehicle to an open space away from tall buildings, trees, etc. Rear window tinting and after-market devices can affect the GPS reception.
Navigation unit door is open or No DVD disc installed. Please check system.	Make sure the navigation DVD is installed with the label side up and the navigation unit door is fully snapped closed.
PC card slot door is open. Please check system.	Make sure that the sliding door for the PC card is fully closed.
No DVD disc, please check system.	Check that the navigation DVD is installed with the label side up.
Display temp is too high. System will shut down until display cools down.	This message will appear briefly when the display temperature is too high, and then the display will turn off until the temperature cools down. The system will turn back on when the display cools down.
Outside temperature is low, system will take a while to start up.	The temperature is below −30°C and the navigation unit has difficulties reading the DVD. The system will start up when the temperate warms up.
DVD disc reading error (unformatted), please consult your dealer.	Check the DVD souce for deep scratches or other damage. Make sure you are using an official Honda navigation DVD (orange in color). The system cannot read other mapping databases or video DVDs. If the problem persists, see your dealer.
Route has not been completed. Please try again from a different location.	Routing to or from a place (new area) that is not in the database. Try planning a different route to or from a different location.
No alternate route found. Original route will be guided.	No alternate route method was found. The original route method will be used.
This destination cannot be found in database.	The destination was not found in the database. Try another destination nearby, or select the destination with the joystick.

Protected by

Forced Starting of Display

1. Remove the trunk trim (see page 20-68).
2. Turn the ignition switch OFF, and connect the SCS service connector (A) to the navigation service check connector (B) located upper of the navigation unit.

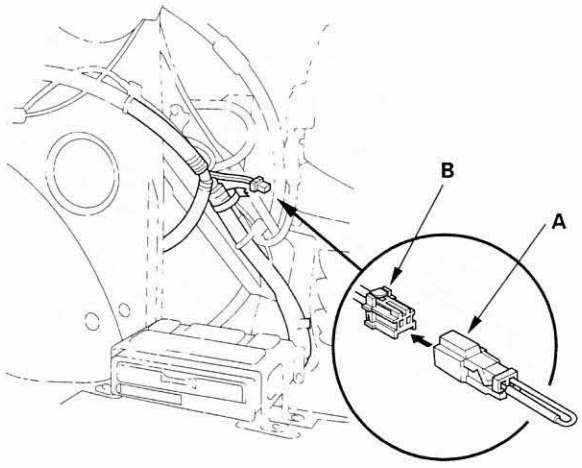

3. Turn the ignition switch ON (II), and check that the diagnosis menu for the picture diagnosis starts up, and then changes to the system link menu.

   NOTE: If the display fails to display the system link screen, refer to no picture is displayed (see page 22-490).

DVD-ROM Replacement

NOTE: When the DVD-ROM is re-inserted or replaced, a map match must be done (see page 22-459).

1. Turn the ignition switch ON (II).
2. Open the cover (A) on the right side of the trunk to gain access to the navigation unit.

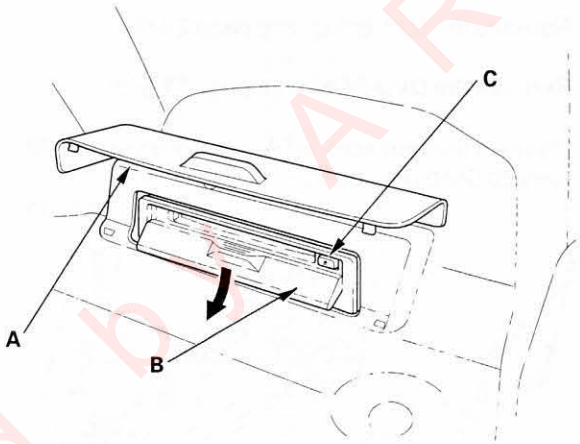

3. Open the door (B), then press the EJECT button (C).
4. Remove the DVD-ROM.
5. Insert the new DVD-ROM with the orange label facing up.
6. Close the front cover. Do not turn the ignition switch OFF; watch the navigation screen until the data is down loaded to the navigation unit.

   NOTE: After servicing, the front cover and PC card slot door must be closed. If you start up the navigation system with the front cover or PC card slot door open, the display will indicate an error message.

Protected by AR

Navigation Unit Removal/ Installation

NOTE:
- If possible, have the customer record any personal information from the navigation system that will be lost.
- If the navigation unit is replaced or disconnected, a Map Match must be done (see page 22-459).

1. Remove the trim lining (see page 20-68).
2. Remove the DVD-ROM (see page 22-533).
3. Remove the four screws (A) from the bracket (B) located the trunk room.

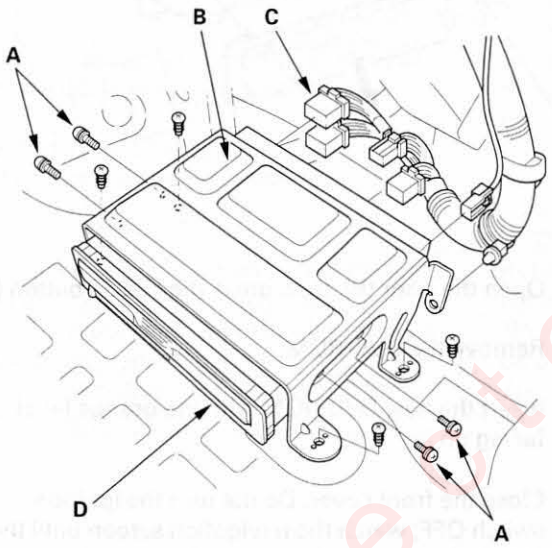

4. Disconnect the navigation unit connectors (C).
5. Remove the navigation unit (D).
6. Install in the reverse order of removal.
7. Install the DVD-ROM, then enter the 4-digit security code.
8. Do the system initialization (see page 22-458).
9. Give the new security code to the customer.

GPS Antenna Removal/Installation

1. Remove the rear shelf (see page 20-66).
2. Remove the trunk trim (see page 20-68).
3. Remove the rear seat-back (see page 20-112).
4. Disconnect the GPS antenna connector (A).

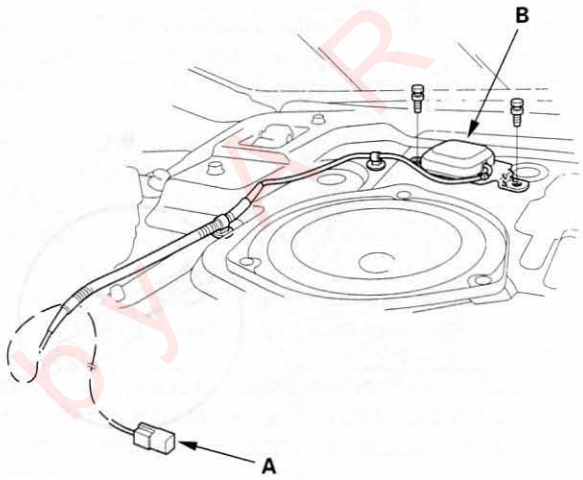

5. Remove the GPS antenna (B).
6. Install in the reverse order of removal.

Protected by MR

Restraints

Restraints

Special Tools 23-2

Seat Belts

Component Location Index 23-3
Front Seat Belt Replacement 23-4
Rear Seat Belt Replacement 23-7
Inspection 23-9

SRS (Supplemental Restraint System)

Component Location Index 23-11
Precautions and Procedures 23-13
General Troubleshooting Information 23-24
DTC Troubleshooting Index 23-27
Symptom Troubleshooting Index 23-30
System Description 23-31
Circuit Diagram 23-34
DTC Troubleshooting 23-36
Symptom Troubleshooting 23-121
Component Replacement/Inspection After Deployment 23-125
Driver's Airbag Replacement 23-128
Front Passenger's Airbag Replacement 23-129
Side Airbag Replacement 23-131
Side Curtain Airbag Replacement 23-132
Airbag Disposal 23-136
Cable Reel Replacement 23-140
SRS Unit Replacement 23-143
Side Impact Sensor (First) Replacement 23-144
Side Impact Sensor (Second) Replacement 23-145
OPDS Unit Replacement 23-146
Front Impact Sensor Replacement 23-147

Protected by AR



Special Tools

Ref. No.	Tool Number	Description	Qty
①*1	07HAZ-SG00500	Deployment Tool	1
②	07PAZ-0010100	SCS Service Connector	1
③	07SAZ-TB4011A	SRS Inflator Simulator	1
④*2	07TAZ-001020A	Backprobe Adapter, 17 mm	2
⑤	07XAZ-S1A0200	SRS Simulator Lead E	1
⑥	07XAZ-SZ30100	SRS Simulator Lead F	1
⑦	07YAZ-S3AA100	SRS Simulator Lead H	1
⑧	070AZ-SAA0100	SRS Short Canceller	1

* 1: Included in SRS Tool Set 07MAZ-SM5000B
* 2: Use with the stacking patch cords from T/N 07SAZ-001000A, Backprobe Set.

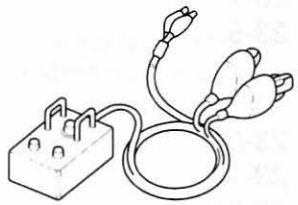

①

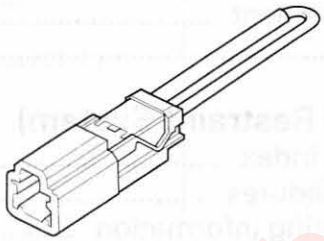

②



③

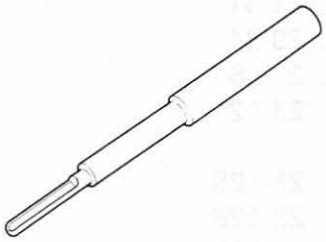

④



⑤

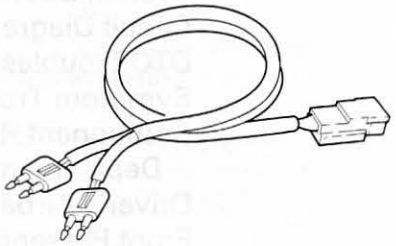

⑥

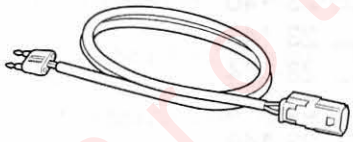

⑦

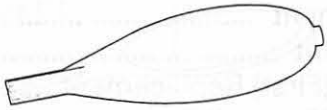

⑧

Protected by AR

Component Location Index

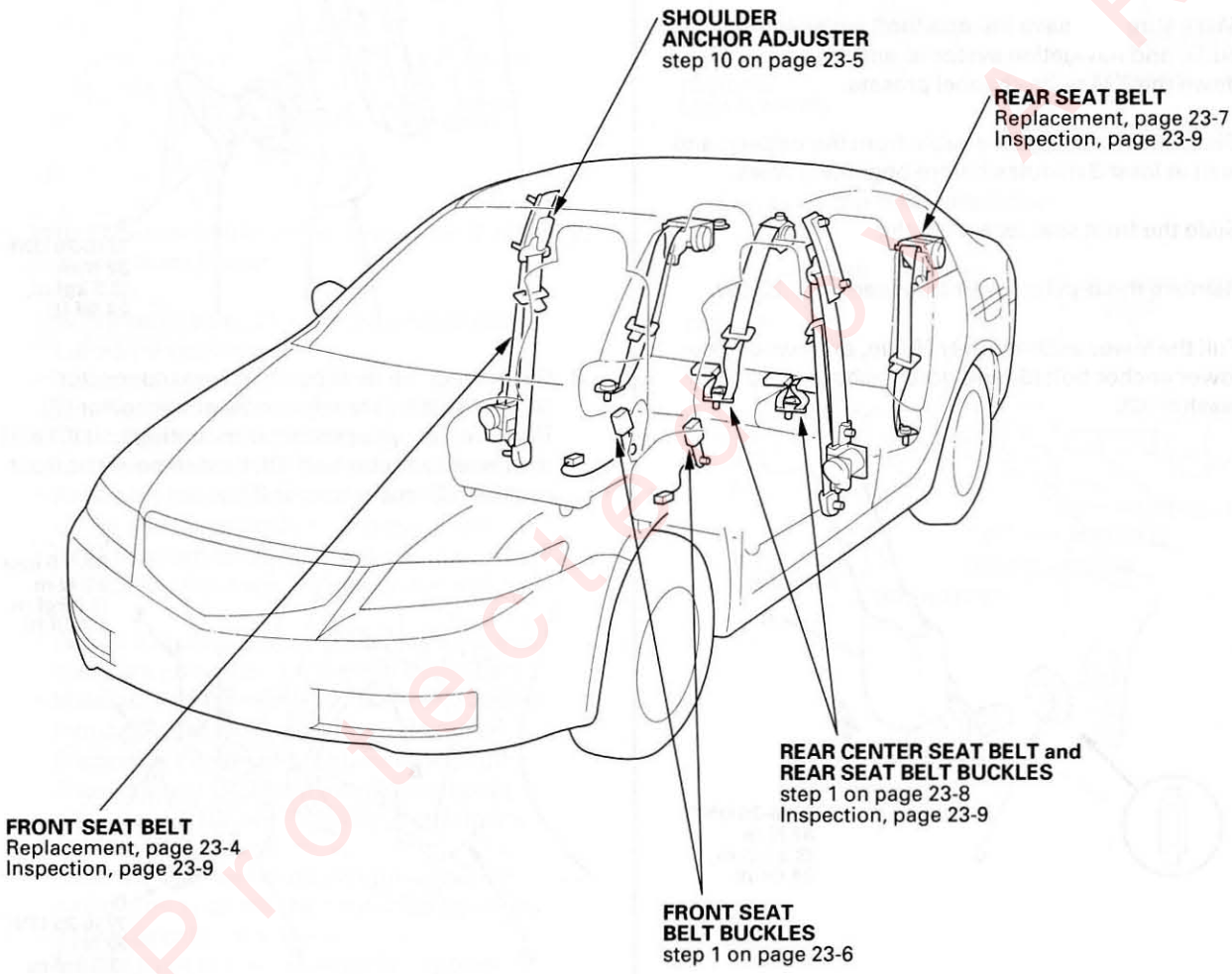

Protected by AR

Front Seat Belt Replacement

SRS components are located in this area. Review the SRS component locations (see page 23-11) and the precautions and procedures (see page 23-13) before performing repairs or service.

NOTE: Check the front seat belts for damage (see page 23-9), and replace them if necessary.

Front Seat Belt

1. Make sure you have the anti-theft codes for the audio and navigation systems, and then write down the XM radio channel presets.
2. Disconnect the negative cable from the battery, and wait at least 3 minutes before beginning work.
3. Slide the front seat forward fully.
4. Remove the B-pillar lower trim (see page 20-62).
5. Pull the lower anchor cover (A) up, and remove the lower anchor bolt (B) and double-shouldered washer (C).

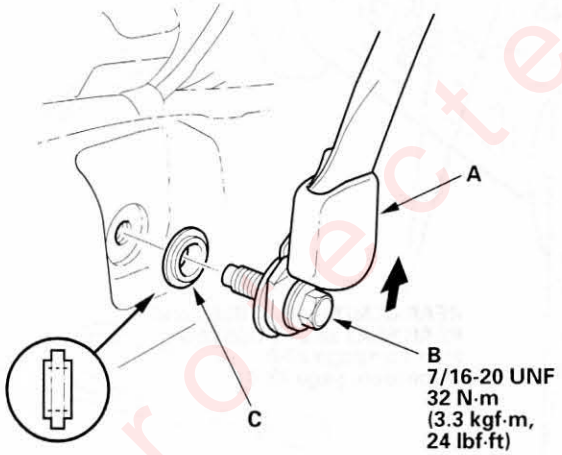

6. Remove the B-pillar upper trim and slider (see page 20-65).
7. Remove the upper anchor bolt (A).

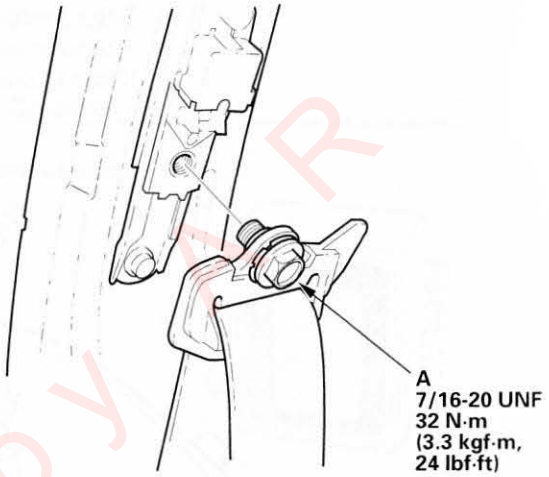

8. Disconnect the seat belt tensioner connector (A) and seat belt tension reducer connector (B). Remove the upper retractor mounting bolt (C) and the lower retractor bolt (D), then remove the front seat belt (E) and retractor (F).

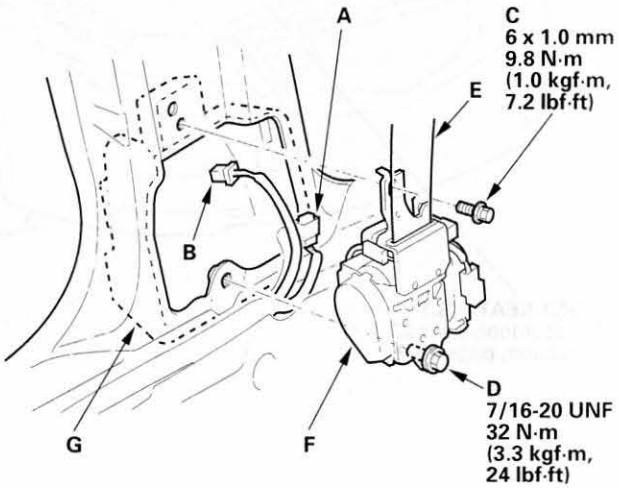

9. If necessary, remove the front seat belt protector (G).

Protected by

10. Remove the shoulder anchor adjuster (A).

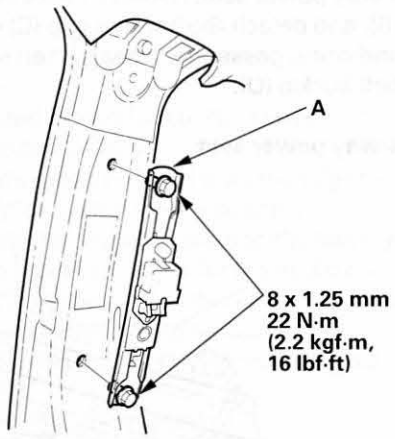

11. Install the seat belt in the reverse order of removal, and note these items:

- Apply liquid thread lock to the anchor bolts before reinstallation.
- Tighten the bolts by hand first, then tighten to specification with a torque wrench.
- Check that the retractor locking mechanism functions as described (see page 23-9).
- Assemble the washers, collar and bushing on the upper and lower anchor bolts as shown.
- If the seat belt tensioner has been activated, replace the front seat belt protector with a new one.
- Before installing the anchor bolts, make sure there are no twists or kinks in the seat belt.
- Make sure the seat belt tensioner and tension reducer connectors are plugged in properly.
- Reconnect the negative cable to the battery.
- Check for any DTCs, and clear them using the HDS. If the DTCs will not clear, perform the necessary troubleshooting.
- Enter the anti-theft codes for the audio and navigation systems, then enter the customer's XM radio channel presets.
- Set the clock (without navigation system).

Upper anchor bolt installation

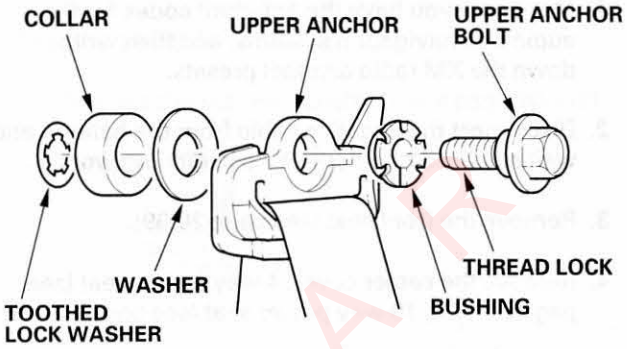

Lower anchor bolt installation

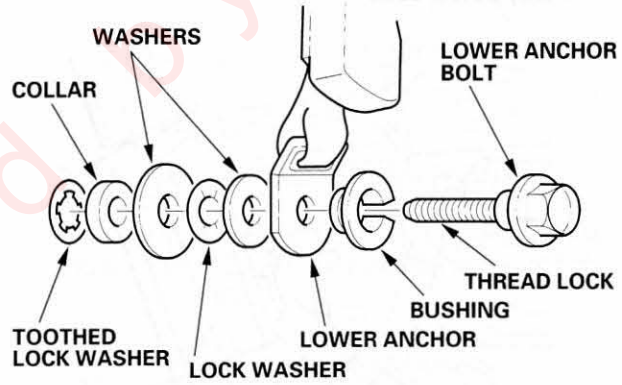

(cont'd)

Front Seat Belt Replacement (cont'd)

Seat Belt Buckle

1. Make sure you have the anti-theft codes for the audio and navigation systems, and then write down the XM radio channel presets.
2. Disconnect the negative cable from the battery, and wait at least 3 minutes before beginning work.
3. Remove the front seat (see page 20-99).
4. Remove the center cover, 4-way power seat (see page 20-101), 10-way power seat (see page 20-102).
5. Disconnect or detach the seat belt switch connector (A).

4-way power seat

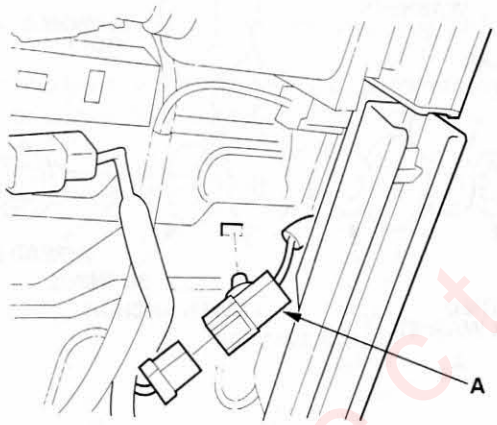

10-way power seat

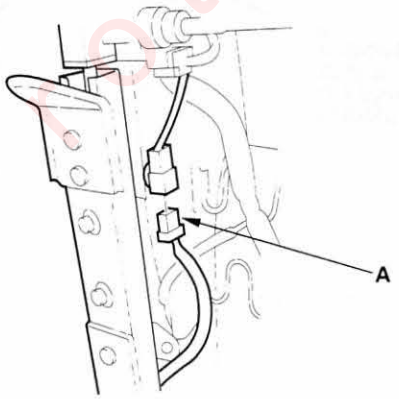

6. Release the hook (A) of the seat cushion cover on 4-way power seat. Remove the center anchor bolt (B), and detach the harness clip (C) on the driver's and some passenger's seats, then remove the seat belt buckle (D).

4-way power seat

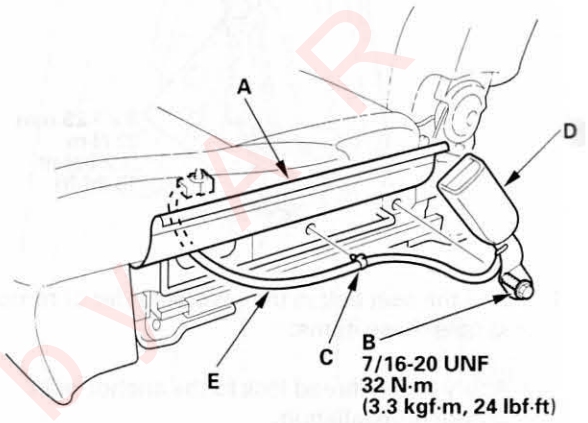

10-way power seat

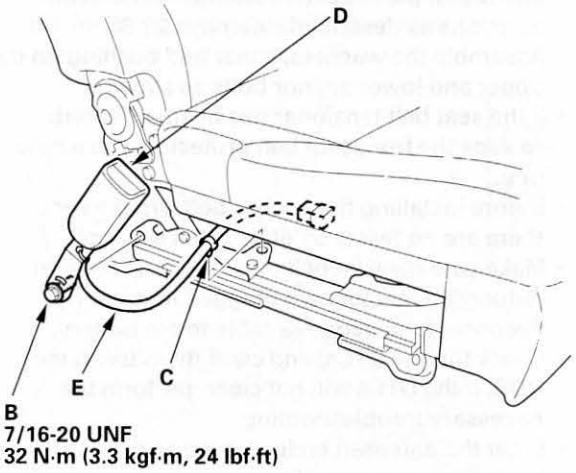

7. Pull the seat belt switch harness (E) out through the space between the seat cushion and the seat linkage or through the hole in the seat track.

Protected by AR

8. Install the buckle in the reverse order of removal, and note these items:

   - Assemble the washers on the center anchor bolt as shown.
   - Apply liquid thread lock to the center anchor bolt before reinstallation.
   - Tighten the bolts by hand first, then tighten to specification with a torque wrench.
   - Reconnect the negative cable to the battery.
   - Enter the anti-theft codes for the audio and navigation systems, and then enter the customer's XM radio channel presets.
   - Set the clock (without navigation system).

Center anchor bolt installation

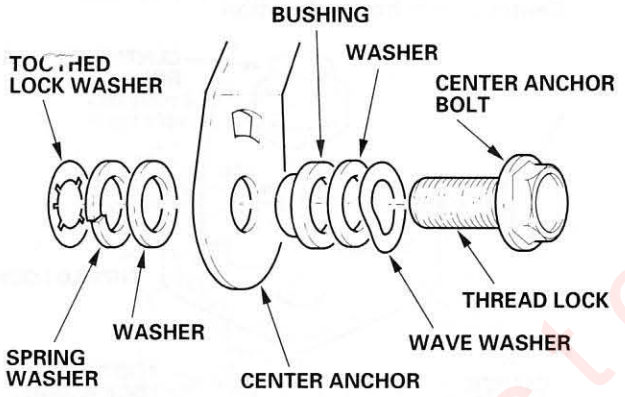

Rear Seat Belt Replacement

NOTE: Check the rear seat belts for damage, and replace them if necessary.

Rear Seat Belt

1. Remove the rear seat cushion (see page 20-112).
2. Remove the lower anchor bolt (A).

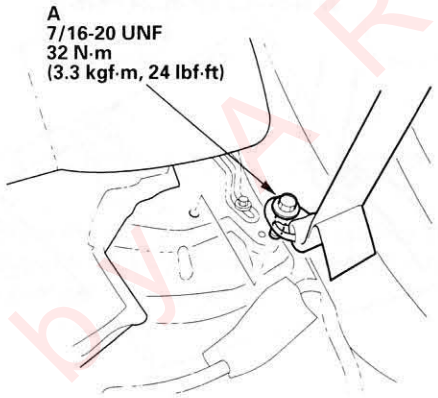

3. Remove the rear shelf (see page 20-67).
4. Remove the retractor mounting bolt (A), and the retractor bolt (B), then remove the rear seat belt (C) and retractor (D).

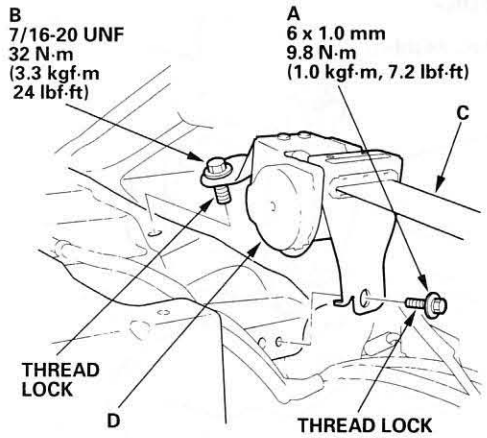

5. Install the seat belt in the reverse order of removal, and note these items:

   - Apply liquid thread lock to the anchor bolts before reinstallation.
   - Check that the retractor locking mechanism functions as described (see page 23-9).
   - Before installing the anchor bolt, make sure there are no twists or kinks in the seat belt.

(cont'd)

Protected by AR

Rear Seat Belt Replacement (cont'd)

Center Seat Belt and Seat Belt Buckles

1. Remove the rear seat cushion (see page 20-112).
2. Remove the center anchor bolts (A), and remove the seat belt buckles (B).

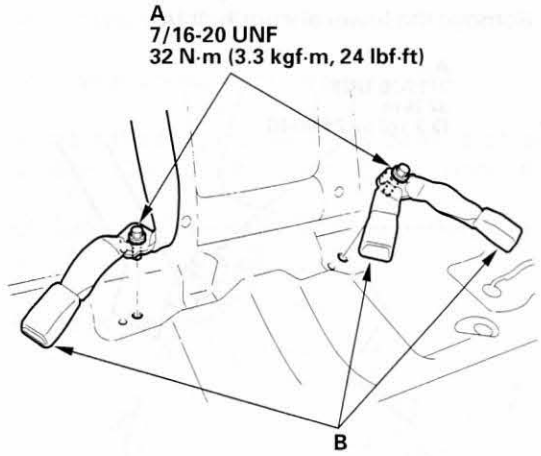

3. Remove the rear shelf (see page 20-67).
4. Remove the retractor bolt (A), then remove the center seat belt (B) and retractor (C).

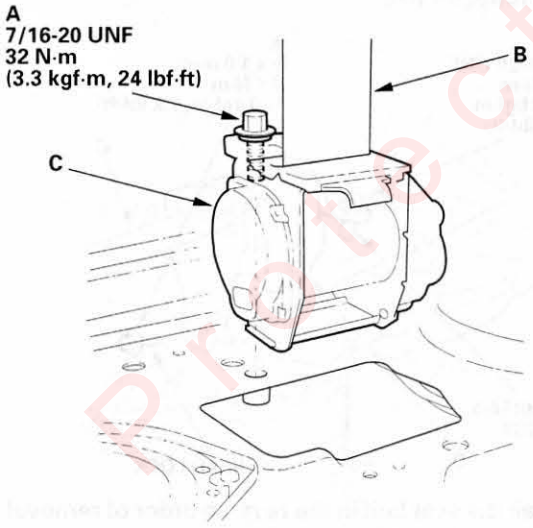

5. Install the seat belt and buckles in the reverse order of removal, and note these items:
   - Apply liquid thread lock to the anchor bolts before reinstallation.
   - Tighten the bolts by hand first, then tighten to specification with a torque wrench.
   - Check that the retractor locking mechanism functions as described (see page 23-9).
   - Assemble the washers on the center anchor bolt as shown.
   - Before installing the center anchor bolt, make sure there are no twists or kinks in the center belt.
   - Verify that the rear center emergency locking retractor (ELR) is pointing straight forward.

Center anchor bolt installation

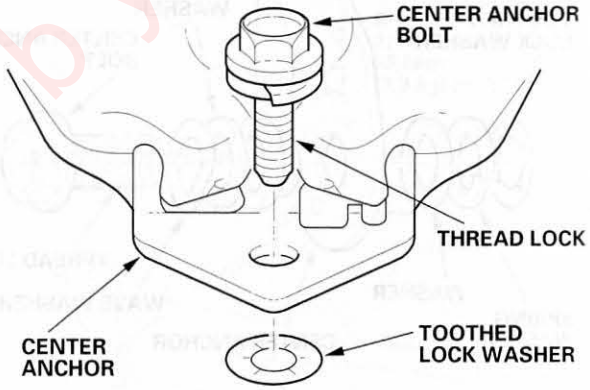

Protected by AP

Inspection

Out of Vehicle

For front seat belt retractor with seat belt tensioner, review the SRS component locations (see page 23-11) and the precautions and procedures (see page 23-13) before performing repairs or service.

Retractor

1. Before installing the retractor, check that the seat belt can be pulled out freely.

2. Make sure that the seat belt does not lock when the retractor (A) is leaned slowly up to 15° from the mounted position. The seat belt should lock when the retractor is leaned over 40°. Do not attempt to disassemble the retractor.

Front

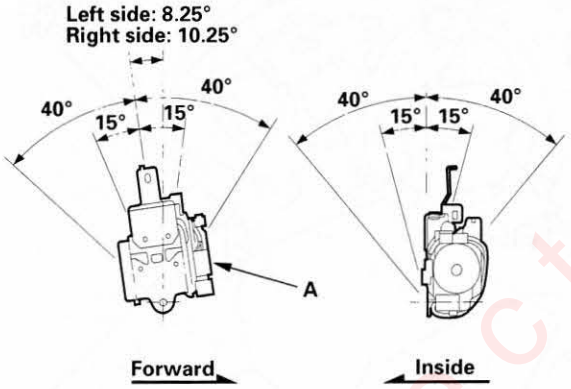

Rear

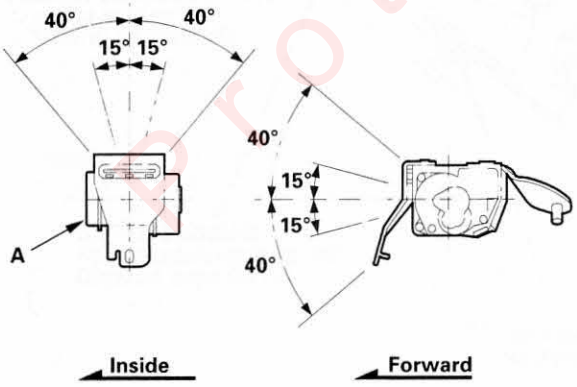

Rear center

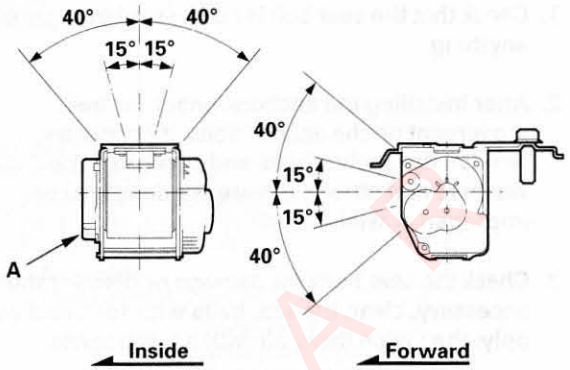

3. Replace the seat belt with a new assembly if there is any abnormality. Do not disassemble any part of the seat belt for any reason.

(cont'd)

Protected by A

Inspection (cont'd)

In-vehicle

1. Check that the seat belt is not twisted or caught on anything.

2. After installing the anchors, check for free movement on the anchor bolts. If necessary, remove the anchor bolts and check that the washers and other parts are not damaged or improperly installed.

3. Check the seat belts for damage or discoloration. If necessary, clean the seat belts with soap and water only, then wipe them off with a clean towel.

   NOTE: Dirt buildup in the metal loops of the upper anchors can cause the seat belts to retract slowly. Wipe the inside of the loops with a clean cloth dampened in isopropyl alcohol.

4. Check that the seat belt does not lock when pulled out slowly. The seat belt is designed to lock only during a sudden stop or impact.

5. Make sure that the seat belt will retract automatically when released.

6. For front passenger's seat belt and all rear seat belts, check the seat belt retractor locking mechanism ALR (automatic locking retractor). This function is for securing child seats.

   –1 Pull the seat belt all the way out to engage the ALR. The seat belt should retract with a soft, ratcheting sound, but not extend. This is normal.
   –2 To disengage the ALR, release the seat belt and allow it to fully retract, then pull the seat belt out part-way. The seat belt should retract and extend normally.

7. Replace the seat belt with a new assembly if there is any abnormality. Do not disassemble any part of the seat belt for any reason.

Protected by AR

Component Location Index

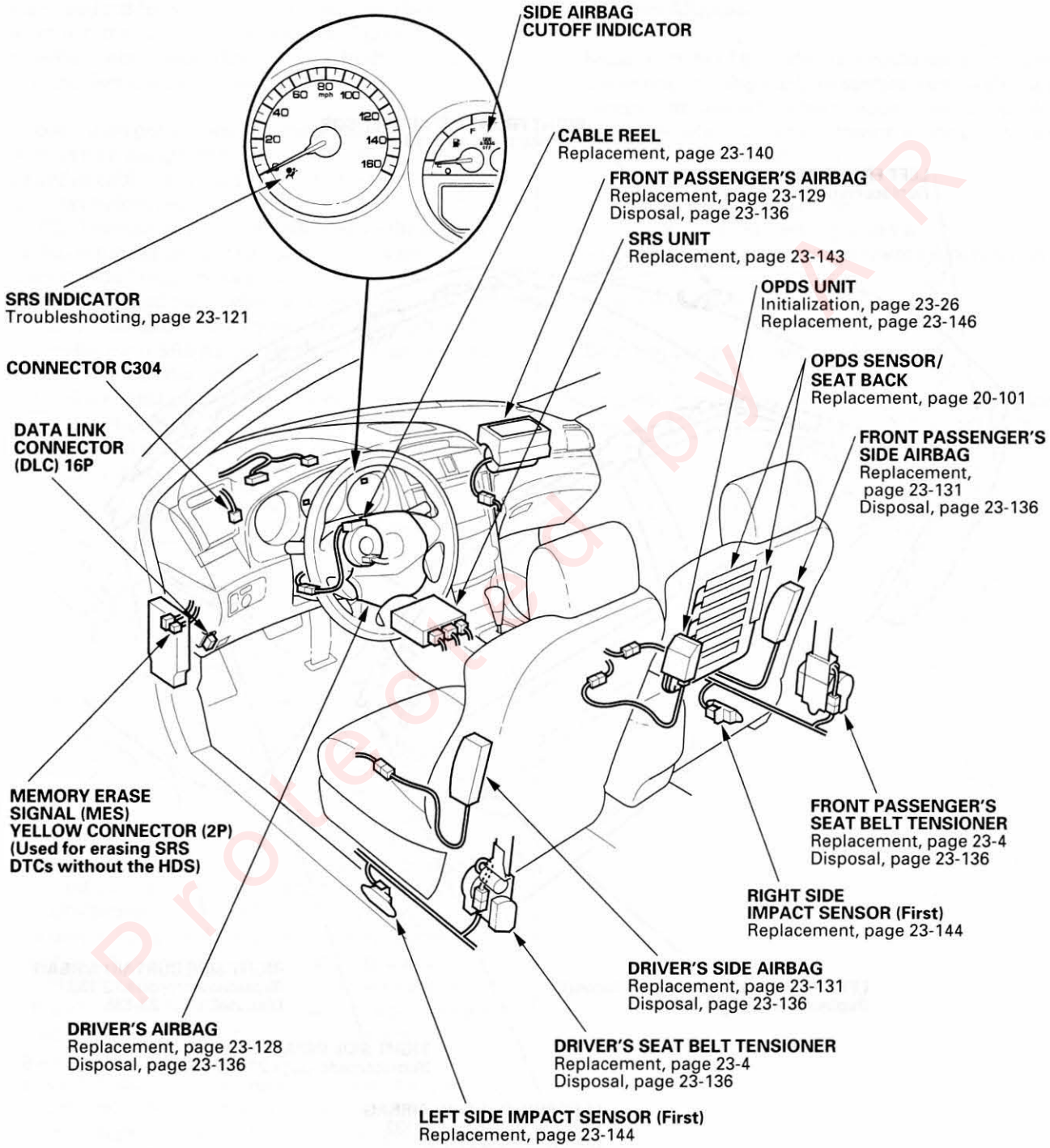

(cont'd)

Component Location Index (cont'd)

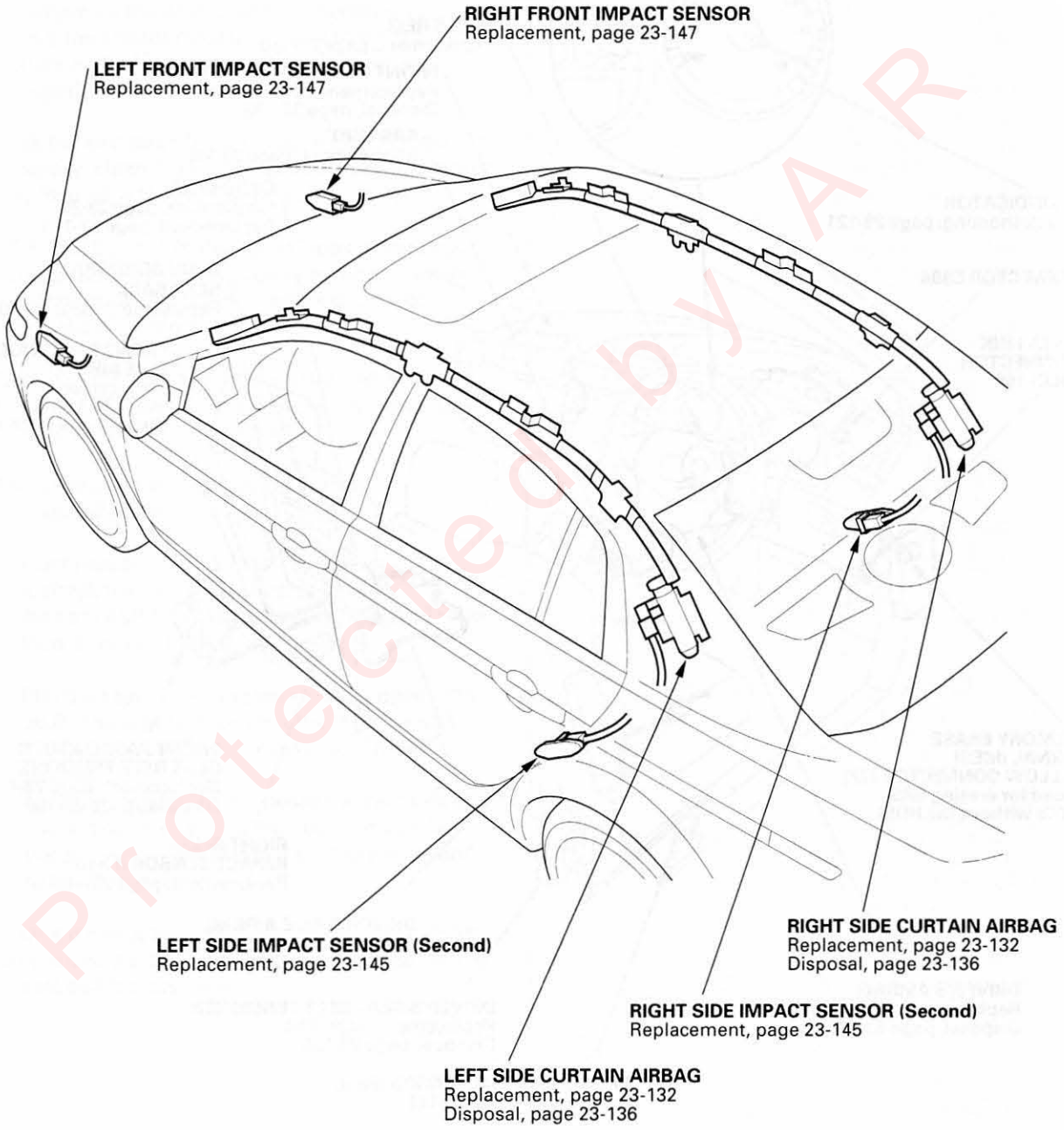

Protected by AR

Precautions and Procedures

General Precautions

Please read the following precautions carefully before performing the airbag system service. Observe the instructions described in this manual, or the airbags could accidentally deploy and cause damage or injuries.

- Except when performing electrical inspections, always turn the ignition switch OFF, disconnect the negative cable from the battery, and wait at least 3 minutes before beginning work.
  NOTE: The memory is not erased even if the ignition switch is turned OFF or the battery cables are disconnected from the battery.
- Use replacement parts which are manufactured to the same standards and quality as the original parts. Do not install used SRS parts. Use only new parts when making SRS repairs.
- Carefully inspect any SRS part before you install it. Do not install any part that shows signs of being dropped or improperly handled, such as dents, cracks or deformation.

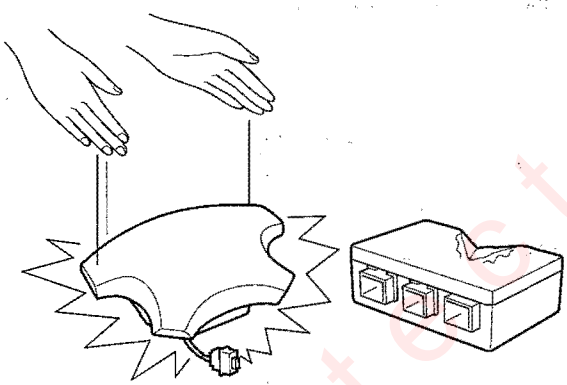

- Before removing any of the SRS parts (including the disconnection of the connectors), always disconnect the SRS connector.
- Use only a digital multimeter to check the system. If it is not a Honda multimeter, make sure its output is 10 mA (0.01A) or less when switched to the lowest value in the ohmmeter range. A tester with a higher output could cause accidental deployment and possible injury.
- Do not put objects on the front passenger's airbag.
- The original radio and navigation system have a coded theft protection circuit. Be sure to get the customer's anti-theft codes and write down the MX radio's channel preset stations before disconnecting the battery cable.
- Before returning the vehicle to the customer, enter the radio code, the navigation code, then enter the customer's MX radio channel presets; set the clock.

Steering-related Precautions

Cable Reel Alignment

- Misalignment of the cable reel could cause an open in the wiring, making the SRS system remote steering wheel controls and the horn inoperative. Center the cable reel whenever the following is performed (see step 6 on page 23-142).
  – Installation of the steering wheel
  – Installation of the cable reel
  – Installation of the steering column
  – Other steering-related adjustment or installation

- Do not disassemble the cable reel.

- Do not apply grease to the cable reel.

- If the cable reel shows any signs of damage, replace it with a new one. For example, it does not rotate smoothly.

(cont'd)

Protected by ARS

Precautions and Procedures (cont'd)

Airbag Handling and Storage

Do not disassemble an airbag. It has no serviceable parts. Once an airbag has been deployed, it cannot be repaired or reused. For temporary storage of the airbag during service, please observe the following precautions.

- Store the removed airbag with the deployment surface up. Never put anything on the removed airbag.

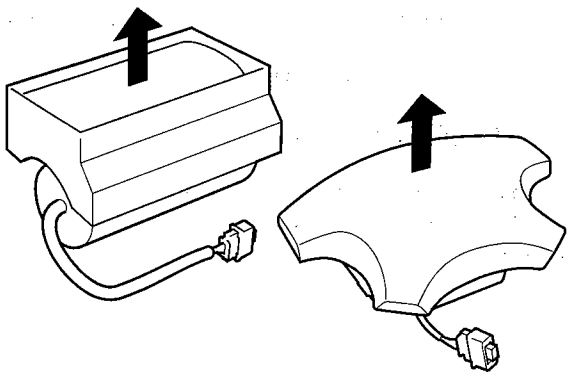

- To prevent damage to the airbag, keep free from any oil, grease, detergent, or water.

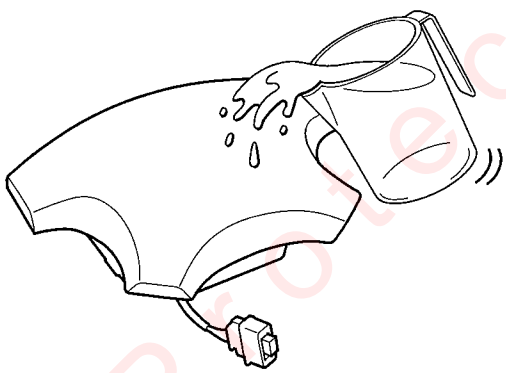

- Store the removed airbag on a secure, flat surface away from any high heat source (exceeding 200°F/ 93°C).

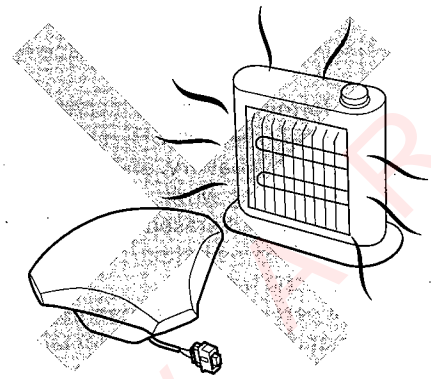

- Never perform electrical inspections to the airbags, such as measuring resistance.
- Do not position yourself in front of the airbag assembly during removal, inspection, or replacement.

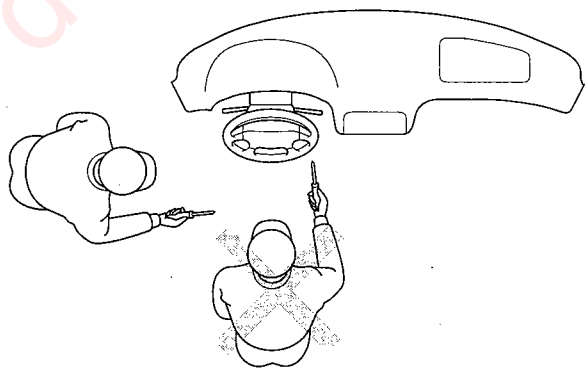

- Refer to the scrapping procedures for disposal of the damaged airbag.

Protected by AIR

- The side curtain airbag inflator assembly is a long, jointed part containing an inflator (A), a flexible bag (B), an adapter pipe (C), and a center bracket (D).

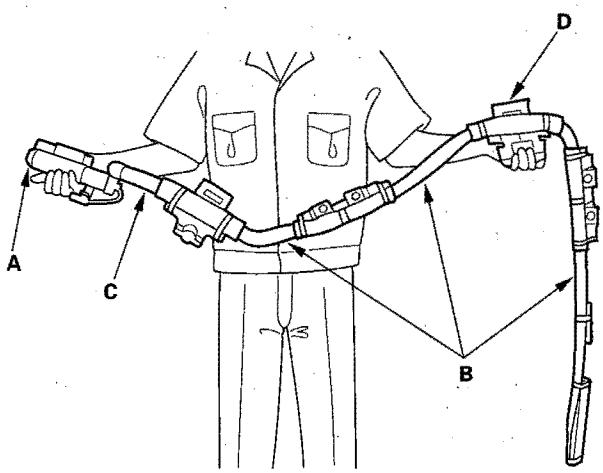

- When removing or installing the side curtain airbag inflator assembly, never handle the flexible bag (B) or the adapter pipe (C).

Protected by AR

(cont'd)

Precautions and Procedures (cont'd)

SRS Unit, Front Impact Sensors, and Side Impact Sensors

- Be careful not to bump or impact the SRS unit, front impact sensors, or side impact sensors when the ignition switch is ON (II), or for at least 3 minutes after the ignition switch is turned OFF.
- During installation or replacement, be careful not to bump (by impact wrench, hammer, etc.) the area around the SRS unit, front impact sensors, or side impact sensors. The airbags could accidentally deploy and cause damage or injury.

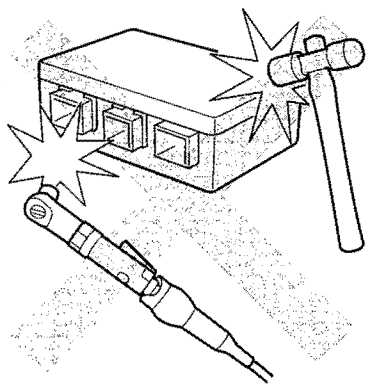

- After a collision that caused any airbag to deploy, the SRS unit and many other components must be replaced (see page 23-125). After a collision in which the airbags, or the side airbags and/or seat belt tensioners did not deploy, inspect for any damage or any deformation on the SRS unit, front impact sensors, and side impact sensors. Replace all damaged parts.

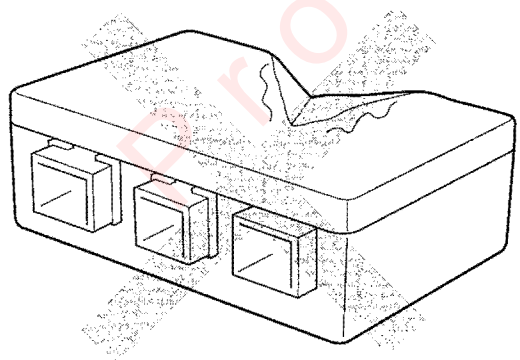

- Do not disassemble the SRS unit, front impact sensors, or side impact sensors.
- Turn the ignition switch OFF, disconnect the battery negative cable, and wait at least 3 minutes before beginning installation or replacement of the SRS unit or disconnecting the connectors from the SRS unit.
- Be sure the SRS unit, front impact sensors, and side impact sensors are installed securely with the mounting bolts torqued to 9.8 N·m (1.0 kgf·m, 7.2 lbf·ft)
- Do not spill water or oil on the SRS unit or the side impact sensors, and keep them away from dust.
- Store the SRS unit, front impact sensors, and side impact sensors in a cool (less than 104°F/40°C) and dry (less than 80 % relative humidity, no moisture) area.

Protected by AP

Wiring Precautions

Some of the SRS wiring can be identified by special yellow outer covering, and the SRS connectors can be indentified by their yellow color. Observe the following instructions.

- Never attempt to modify, splice, or repair SRS wiring. If there is an open or damage in SRS wiring or terminals, replace the harness.

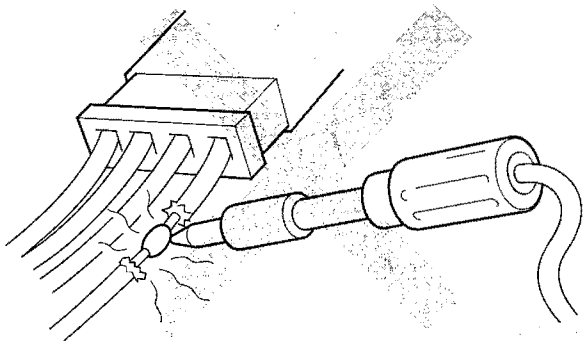

- Be sure to install the harness wires so they do not get pinched or interfere with other parts.

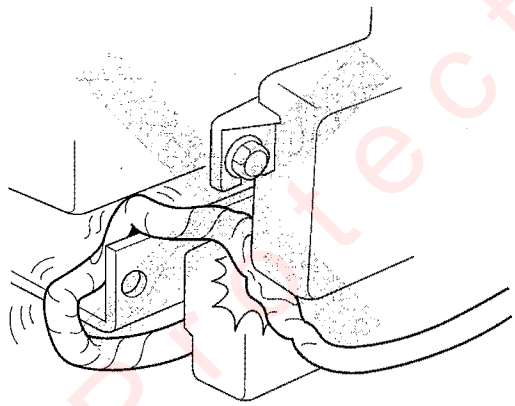

- Make sure all SRS ground locations are clean and securely fastened for optimum metal-to-metal contact. Poor grounding can cause intermittent problems that are difficult to diagnose.

Precautions for Electrical Inspections

- When using electrical test equipment, insert the probe of the tester into the wire side of the connector. Do not insert the probe of the tester into the terminal side of the connector, and do not tamper with the connector.

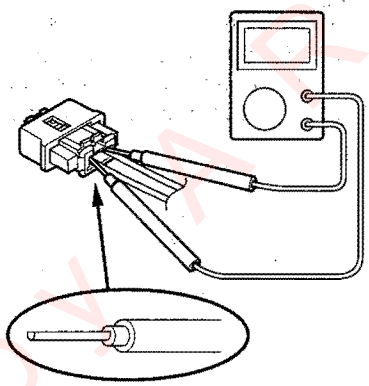

- Use a U-shaped probe. Do not insert the probe forcibly.

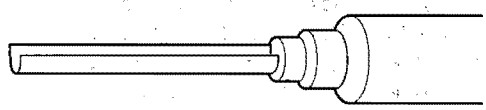

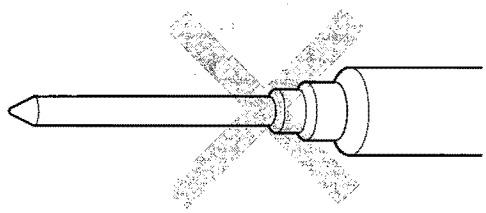

- Use specified service connectors in troubleshooting. Using improper tools could cause an error in inspection due to poor metal-to-metal contact.

(cont'd)

Protected by

Precautions and Procedures (cont'd)

Spring-loaded Lock Connector

Some SRS system connectors have a spring-loaded lock.

Front Airbag Connectors

Disconnecting
To release the lock, pull the spring-loaded sleeve (A) toward the stop (B) while holding the opposite half of the connector. Then pull the connector halves apart. Be sure to pull on the sleeve and not on the connector.

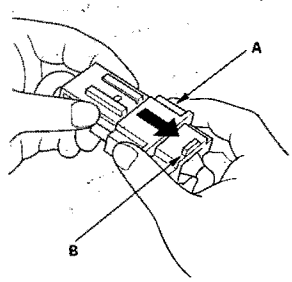

Connecting

1. To reconnect, hold the pawl-side connector, and press on the back of the sleeve-side connector in the direction shown. As the two connector halves are pressed together, the sleeve (A) is pushed back by the pawl (C). Do not touch the sleeve.

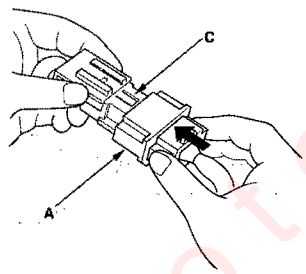

2. When the connector halves are completely connected, the pawl is released, and the spring-loaded sleeve locks the connector.

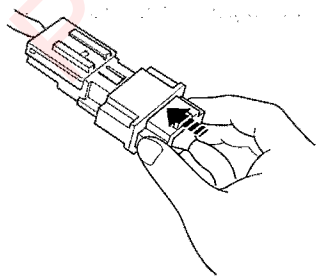

Side Airbag Connector

Disconnecting
To release the lock, pull the spring-loaded sleeve (A) and the slider (B) while holding the opposite half of the connector. Then pull the connector halves apart. Be sure to pull on the sleeve and not on the connector half.

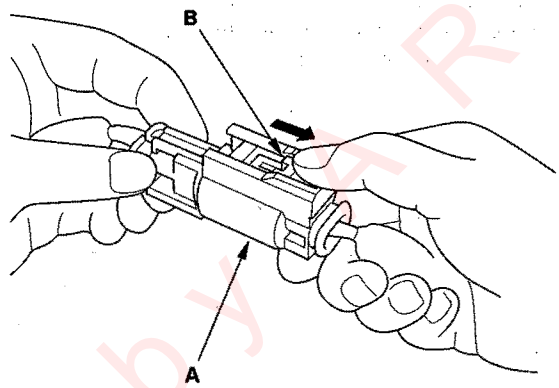

Connecting
Hold both connector halves, and press them firmly together until the projection (C) of the sleeve-side connector clicks.

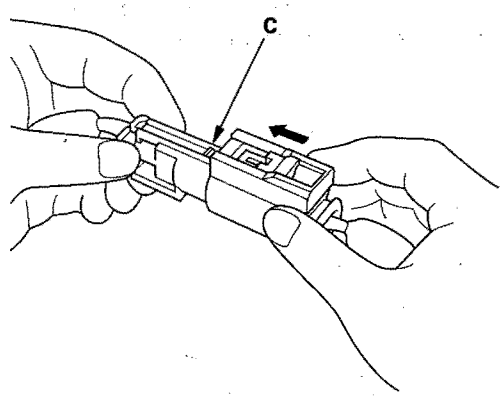

Protected by AR

Opening the SRS Unit Shorting Connectors For Diagnosis

NOTE:
- To prevent damage of the connector cavity, insert the special tool straight into the cavity from the terminal side.
- Before installing the special tool, wash it with electrical contact cleaner, then air blow it dry.
- Do not use the special tool if it is damaged.
- Make sure to remove the special tool before re-connecting.

When SRS unit connectors A, B, or C are disconnected, a short circuit is created in the connector by its own function to prevent airbag deployment. The circuit needs to be opened sometimes when diagnosis is performed on the circuit.

Insert the special tool(s) (No. 070AZ-SAA0100, SRS short canceller) in the specified cavities when it is necessary to keep the circuit open for diagnosis.

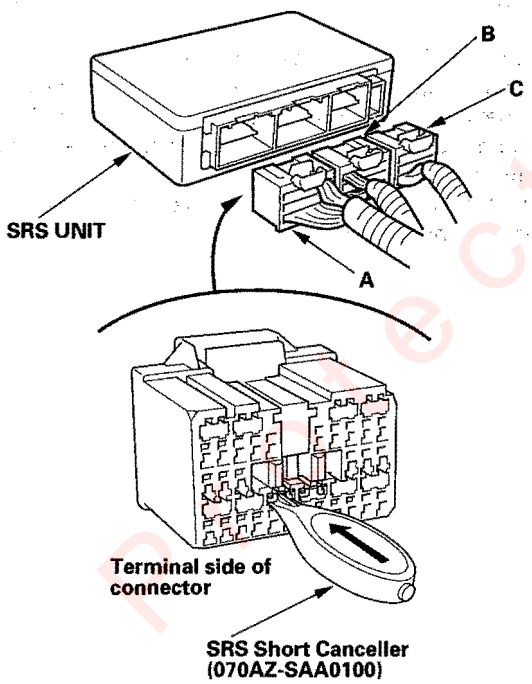

SRS UNIT CONNECTOR A (28P)

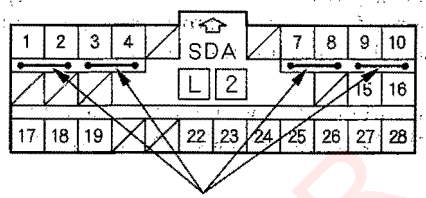

Insert special tool here

Wire side of female terminals

SRS UNIT CONNECTOR B (28P)

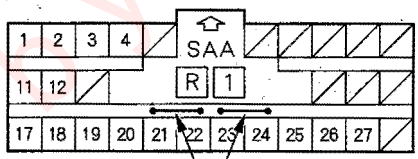

Insert special tool here

Wire side of female terminals

SRS UNIT CONNECTOR C (16P)

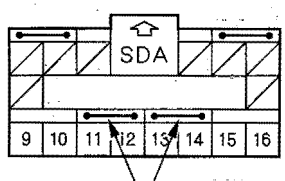

Insert special tool here

Wire side of female terminals

(cont'd)

Precautions and Procedures (cont'd)

Backprobing Spring-loaded Lock Connectors

When checking voltage or resistance on this type of connector the first time, you must remove the retainer (A) to insert the tester probe from the wire side.

NOTE: It is not necessary to reinstall the removed retainer; the terminals will stay locked in the connector housing.

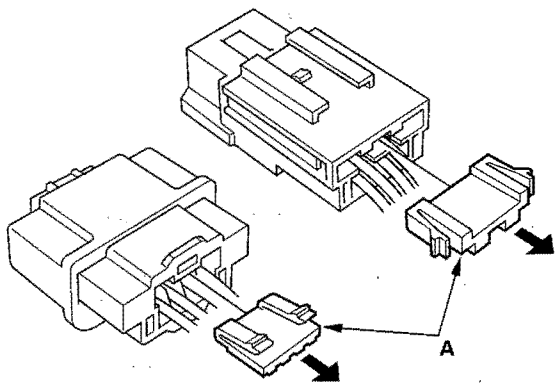

To remove the retainer (A), insert a flat-tip screwdriver (B) between the connector body and the retainer, then carefully pry out the retainer. Take care not to break the connector.

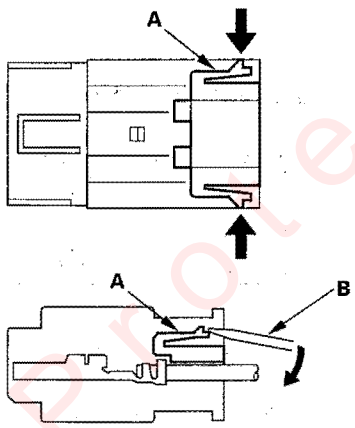

Seats with Side Airbags

Seats with side airbags have a "SIDE AIRBAG" label on the seat-back.

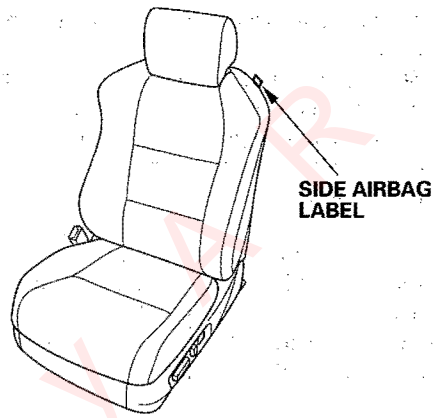

- When cleaning, do not saturate the seat with liquid, and do not spray steam on the seat.
- Do not repair a torn or frayed seat-back cover; replace it.
- After a collision in which the side airbag was deployed, replace the seat-back cover and side airbag with new parts. If the seat-back cushion is split, it must be replaced. If the seat-back frame is deformed, it must be replaced.
- Never put aftermarket accessories on the seat (covers, pads, seat heaters, lights, etc.).

Protected by AR

Disconnecting System Connectors

Turn the ignition switch OFF and disconnect the negative cable from the battery, and wait at least 3 minutes before beginning the following procedures.

- Before disconnecting SRS unit connector B (3) from SRS unit, disconnect both seat belt tensioner 4P connectors (4, 5).
- Before disconnecting the cable reel 4P connector (1), disconnect the driver's airbag 4P connector (2).

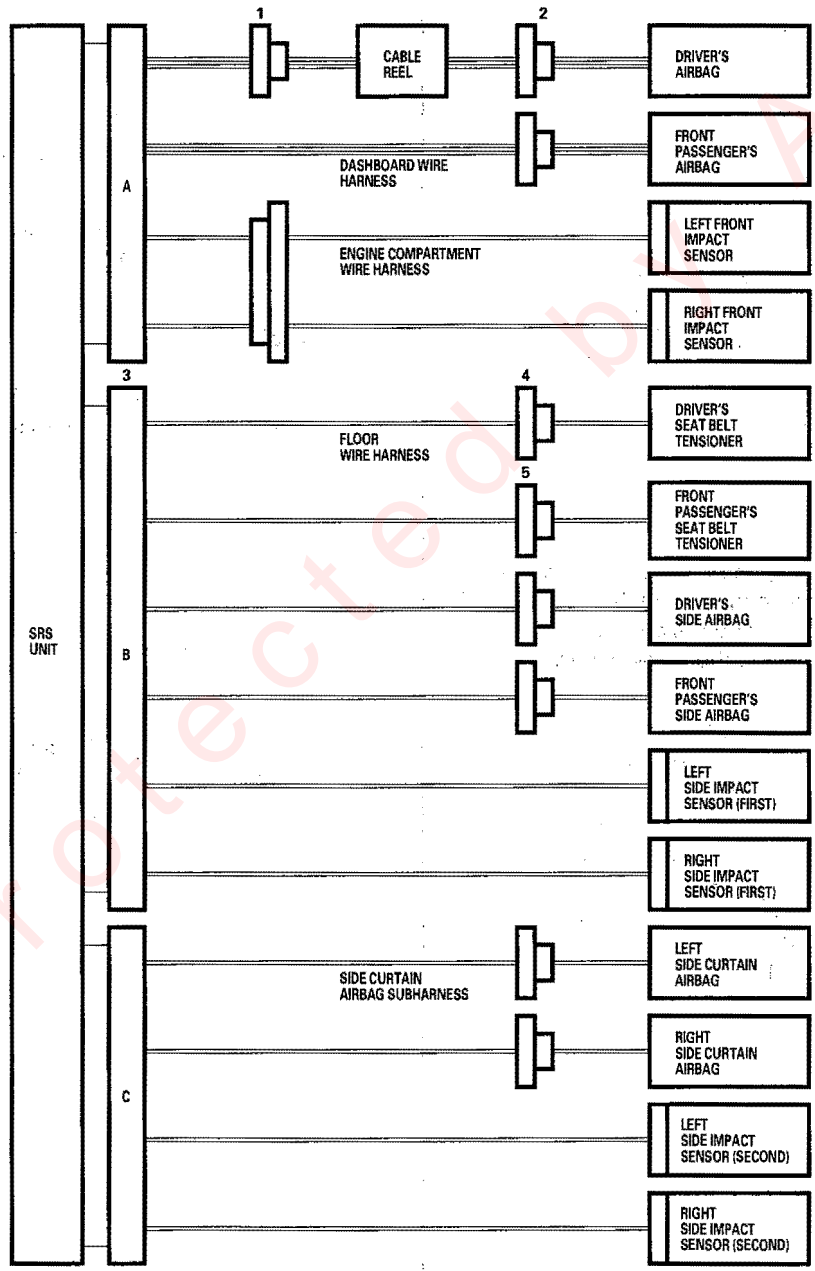

Protected by AR

(cont'd)

Precautions and Procedures (cont'd)

1. Disconnect the battery negative cable, and wait at least 3 minutes.

Driver's Airbag

2. Remove the access panel (A) from the steering wheel, then disconnect the driver's airbag 4P connector (B) from the cable reel.

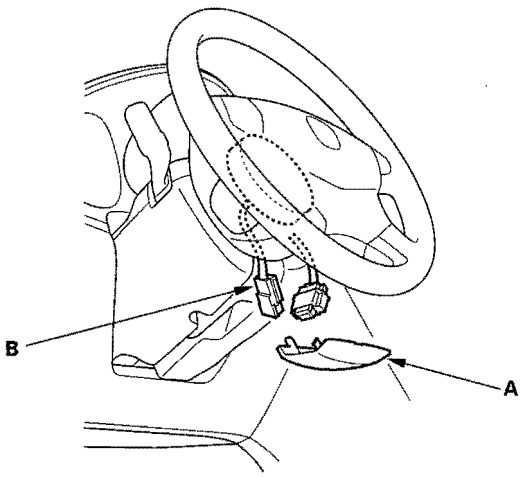

Front Passenger's Airbag

3. Remove the glove box (see page 20-85), and the glove box housing (see page 20-84) then disconnect the front passenger's airbag 4P connector (A) from the dashboard wire harness.

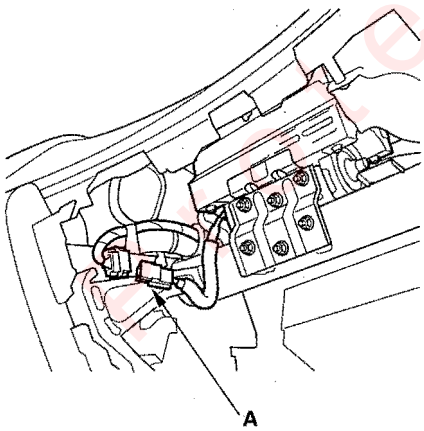

Side Airbag

4. Disconnect the side airbag 2P connector (A) from the floor wire harness.

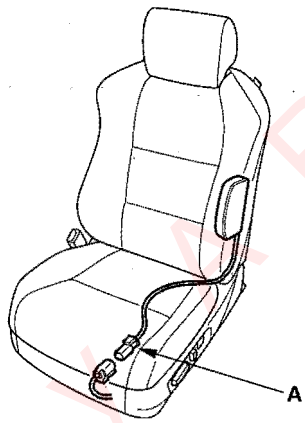

Side Curtain Airbag

5. Disconnect the side curtain airbag 2P connector (A) from the side curtain airbag subharness.

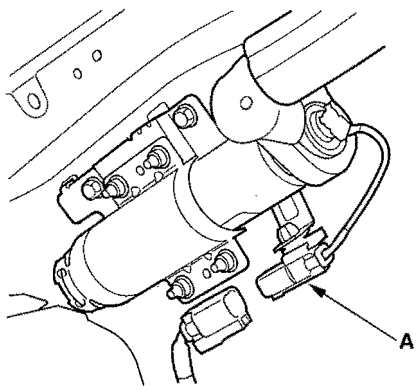

Protected by 4R

Seat Belt Tensioner

6. Disconnect the seat belt tensioner 4P connector (A) from the floor wire harness.

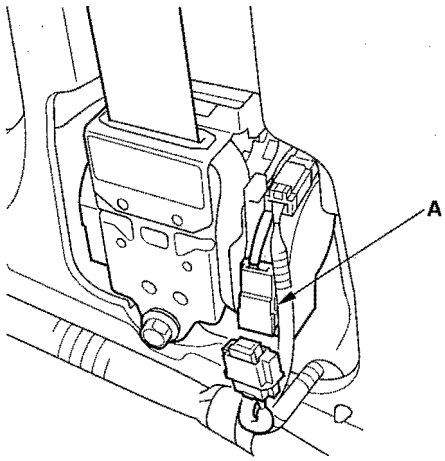

SRS Unit

7. Disconnect SRS unit connector A, SRS unit connector B, and/or SRS unit connector C from the SRS unit.

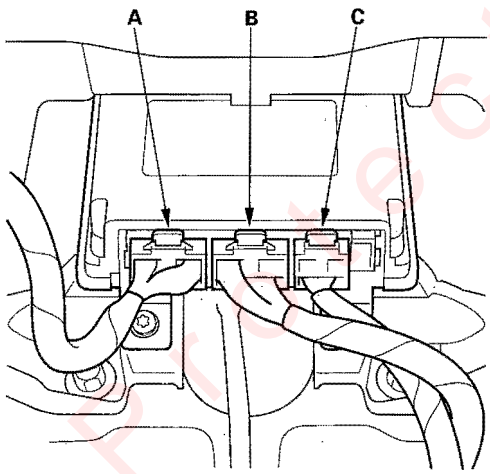

Protected by AR

General Troubleshooting Information

DTC (Diagnostic Trouble Codes)

The self-diagnostic function of the SRS system allows it to locate the causes of system problems and then store this information in memory. For easier troubleshooting, this data can be retrieved via a data link circuit.

- When you turn the ignition switch ON (II), the SRS indicator will come on. If it goes off after 6 seconds, the system is normal, and is not currently detecting any abnormality.
- If there is an abnormality, the system locates and defines the problem, stores this information in memory, and turns the SRS indicator on. The data will remain in the memory even when the ignition switch is turned off or if the battery is disconnected.
- The data is stored in memory as a diagnostic trouble code (DTC).
- DTCs are either latching or resetting depending on the malfunction. With resetting DTCs the SRS indicator will go off the next time the ignition switch is turned ON and the system is normal, but the DTC is still stored. With latching DTCs the SRS indicator will not turn OFF until the malfunction is repaired and the DTC is cleared.
- When you connect the HDS to the 16P data link connector (DLC), you can retrieve detailed DTC in the Honda Systems "SRS" menu.
- After reading and recording the DTC, proceed with the troubleshooting procedure for that DTC code.

Precautions

- Use only a digital multimeter to check the system. If it's not a Honda multimeter, make sure its output is 10 mA (0.01A) or less when switched to the smallest value in the ohmmeter range. A tester with a higher output could damage the airbag circuit or cause accidental airbag deployment and possible injury.
- Whenever the ignition switch is ON (II), or has been turned OFF for less than 3 minutes, be careful not to bump the SRS unit; the airbags could accidentally deploy and cause damage or injuries.
- Before you remove the SRS harness, disconnect the driver's airbag connector, the front passenger's airbag connector, both side airbag connectors, both side curtain airbag connectors and both seat belt tensioner connectors.
- Make sure the battery is sufficiently charged. If the battery is dead or low, measuring values won't be correct.
- Do not touch a tester probe to the terminals in the SRS unit or harness connectors, and do not connect the terminals with a jumper wire. Use only the backprobe set and the HDS. Backprobe spring-loaded lock type connectors correctly (see page 23-20).

Reading the DTC

HDS

1. Make sure the ignition switch is OFF.
2. Connect the HDS to the DLC (A).

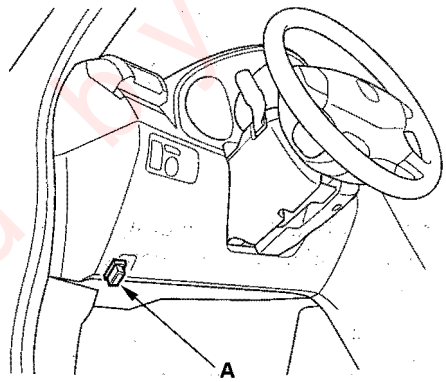

3. Turn the ignition switch ON (II).
4. Use the HDS to check for DTCs.
5. Read and record the DTC.
6. Turn the ignition switch OFF, and wait for 10 seconds.
7. Disconnect the HDS from the DLC.
8. Do with the troubleshooting procedure for the DTC.

Protected by A R

Erasing the DTC Memory with HDS

1. Make sure the ignition switch is OFF.
2. Connect the HDS to the DLC (A).

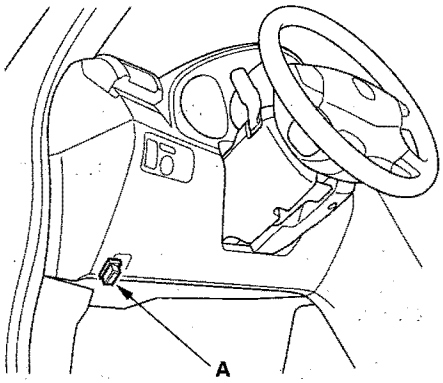

3. Turn the ignition switch ON (II).
4. Select DTC CLEAR in the TEST MODE MENU of the HDS. This erases the DTC(s).
5. Turn the ignition switch OFF, and wait for 10 seconds.
6. Disconnect the HDS from the DLC.

Erasing the DTC Memory with Manual Mode

Special Tools Required
SCS service connector 07PAZ-0010100

To erase the DTC(s) from the SRS unit, use the HDS, or the following procedure.

1. Make sure the ignition switch is OFF and the driver's seat belt buckle is unbuckled.
2. Connect the SCS service connector (A) to the yellow MES 2P connector (B). Do not use a jumper wire.

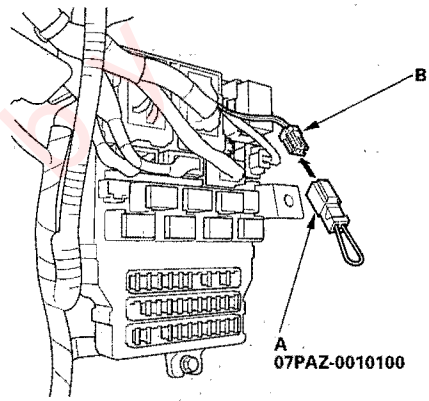

3. Turn the ignition switch ON (II).
4. The SRS indicator will come on for about 6 seconds, and then go off. Remove the SCS service connector from the MES connector (2P) within 4 seconds after the indicator goes off.
5. The SRS indicator will come on again. Reconnect the SCS service connector to the MES connector (2P) within 4 seconds after the indicator comes on.
6. When the SRS indicator goes off, remove the SCS service connector from the MES connector (2P) within 4 seconds.
7. The SRS indicator will blink two times indicating that the memory has been erased.
8. Turn the ignition switch OFF, and wait for 10 seconds.
9. Turn the ignition switch ON (II) again. The SRS is OK if the SRS indicator comes on for 6 seconds, and then goes off.

(cont'd)

Protected by AR

General Troubleshooting Information (cont'd)

Initializing the OPDS (Occupant Position Detection System) Unit

When a seat-back cover, seat-back cushion, and/or OPDS unit is replaced, initialize the OPDS by following the procedure.

NOTE: A new (uninitialized) OPDS unit installed with a faulty OPDS sensor can cause DTC 85-71.

1. Erase the DTC memory (see "Erasing the DTC Memory").
2. Make sure the front passenger's seat is dry. Set the seat-back in a normal position, and make sure there is nothing on the seat.
3. Make sure the ignition switch is OFF and the MES connector is not shorted.
4. Make sure the driver's seat belt buckle is not buckled.
5. Connect the HDS to the DLC (A).

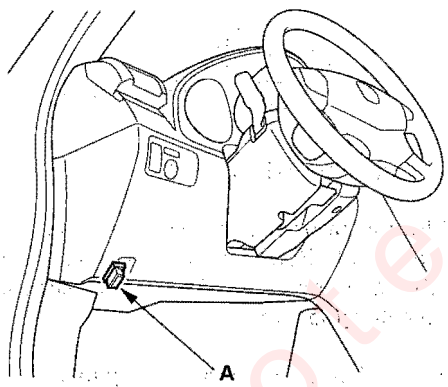

6. Turn the ignition switch ON (II).
7. From the HDS Main Menu, select SRS, then Misc Test, then adjustments. Select OPDS INIT. in the Adjustment Menu. Follow the screen prompts to initialize the OPDS.
8. Turn the ignition switch OFF.
9. Disconnect the HDS from the DLC.

   NOTE: If the OPDS system fails to initialize several times, replace the OPDS sensor and retry. If the OPDS system continues to fail to initialize, replace the OPDS unit.

Troubleshooting Intermittent Failures

If there was a malfunction, but it doesn't recur, it will be stored in the memory as an intermittent failure, and the SRS indicator may come on depending on the malfunction detected.

Troubleshoot as follows:

1. Read the DTC (see "Reading the DTC").
2. Ask the customer under what conditions the SRS light usually turns on.
3. Check all SRS connectors that are related to the temporary DTC stored in memory, for poor or loose connections.
4. Erase the DTC memory (see "Erasing the DTC Memory").
5. Set the parking brake, then start the engine, and let it idle.
6. The SRS indicator should come on for about 6 seconds and then go off.
7. Shake the related wire harness and the connectors, take a test drive (quick acceleration, quick braking, cornering), turn the steering wheel fully left and right, and hold it there for 5 to 10 seconds. Use the heater or A/C to help match the conditions that the customer described. If the problem recurs, the SRS indicator will come on.
8. If you can't duplicate the intermittent failure, the system is OK at this time.

Protected by AR

DTC Troubleshooting Index

TRW SRS Unit

DTC	Latch * (1)	Reset * (2)	Detection Item	Notes
11-1x		×	Open or increased resistance in driver's airbag first inflator	(see page 23-36)
11-3x		×	Short to another wire or decreased resistance in driver's airbag first inflator	(see page 23-37)
11-4x		×	Open or increased resistance in driver's airbag second inflator	(see page 23-36)
11-6x		×	Short to another wire or decreased resistance in driver's airbag second inflator	(see page 23-37)
11-8x	×		Short to power in driver's airbag first inflator	(see page 23-39)
11-9x	×		Short to ground in driver's airbag first inflator	(see page 23-40)
11-Ax	×		Short to power in driver's airbag second inflator	(see page 23-39)
11-Bx	×		Short to ground in driver's airbag second inflator	(see page 23-40)
12-1x		×	Open or increased resistance in front passenger's airbag first inflator	(see page 23-42)
12-3x		×	Short to another wire or decreased resistance in front passenger's airbag first inflator	(see page 23-43)
12-4x		×	Open or increased resistance in front passenger's airbag second inflator	(see page 23-42)
12-6x		×	Short to another wire or decreased resistance in front passenger's airbag second inflator	(see page 23-43)
12-8x	×		Short to power in front passenger's airbag first inflator	(see page 23-44)
12-9x	×		Short to ground in front passenger's airbag first inflator	(see page 23-45)
12-Ax	×		Short to power in front passenger's airbag second inflator	(see page 23-44)
12-Bx	×		Short to ground in front passenger's airbag second inflator	(see page 23-45)
21-1x		×	Open or increased resistance in driver's seat belt tensioner	(see page 23-46)
21-3x		×	Short to another wire or decreased resistance in driver's seat belt tensioner	(see page 23-47)
21-8x	×		Short to power in driver's seat belt tensioner	(see page 23-48)
21-9x	×		Short to ground in driver's seat belt tensioner	(see page 23-49)
22-1x		×	Open or increased resistance in front passenger's seat belt tensioner	(see page 23-50)
22-3x		×	Short to another wire or decreased resistance in front passenger's seat belt tensioner	(see page 23-51)
22-8x	×		Short to power in front passenger's seat belt tensioner	(see page 23-52)
22-9x	×		Short to ground in front passenger's seat belt tensioner	(see page 23-53)
31-1x		×	Open or increased resistance in driver's side airbag inflator	(see page 23-54)
31-3x		×	Short to another wire or decreased resistance in driver's side airbag inflator	(see page 23-55)
31-8x	×		Short to power in driver's side airbag inflator	(see page 23-56)
31-9x	×		Short to ground in driver's side airbag inflator	(see page 23-57)
32-1x		×	Open or increased resistance in front passenger's side airbag inflator	(see page 23-58)
32-3x		×	Short to another wire or decreased resistance in front passenger's side airbag inflator	(see page 23-59)
32-8x	×		Short to power in front passenger's side airbag inflator	(see page 23-60)
32-9x	×		Short to ground in front passenger's side airbag inflator	(see page 23-61)
33-1x		×	Open or increased resistance in left side curtain airbag inflator	(see page 23-62)
33-3x		×	Short to another wire or decreased resistance in left side curtain airbag inflator	(see page 23-63)
33-8x	×		Short to power in left side curtain airbag inflator	(see page 23-64)
33-9x	×		Short to ground in left side curtain airbag inflator	(see page 23-65)
34-1x		×	Open or increased resistance in right side curtain airbag inflator	(see page 23-66)
34-3x		×	Short to another wire or decreased resistance in right side curtain airbag inflator	(see page 23-67)
34-8x	×		Short to power in right side curtain airbag inflator	(see page 23-68)
34-9x	×		Short to ground in right side curtain airbag inflator	(see page 23-69)

NOTE: The "x" at the end of each DTC denotes a numeric character (0 thru 9) or an alpha character (A thru F) that you will see on the HDS display. The character is unrelated to your troubleshooting; it designates the SRS unit manufacturer and other details used for product analysis.

* (1): The SRS indicator turns on and stays on whenever the ignition switch is in the ON position, or until the DTC is cleared.
* (2): The SRS indicator turns on when the DTC is set. The SRS indicator will not turn on after the ignition switch is cycled from ON to OFF (if the circuit returns to normal), but the DTC will be stored in the SRS unit.

(cont'd)

DTC Troubleshooting Index (cont'd)

TRW SRS Unit

DTC	Latch * (1)	Reset * (2)	Detection Item	Notes
41-1x		×	No signal from the left front impact sensor	(see page 23-70)
41-2x		×	Internal failure of the left front impact sensor	(see page 23-76)
41-3x				
41-Bx	×			
42-1x		×	No signal from the right front impact sensor	(see page 23-73)
42-2x		×	Internal failure of the right front impact sensor	(see page 23-76)
42-3x				
42-Bx	×			
43-1x		×	No signal from the left side impact sensor (first)	(see page 23-77)
43-2x		×	Internal failure of the left side impact sensor (first)	(see page 23-83)
43-3x				
43-Bx	×			
44-1x		×	No signal from the right side impact sensor (first)	(see page 23-80)
44-2x		×	Internal failure of the right side impact sensor (first)	(see page 23-83)
44-3x				
44-Bx	×			
45-1x		×	No signal from the left side impact sensor (second)	(see page 23-84)
45-2x		×	Internal failure of the left side impact sensor (second)	(see page 23-90)
45-3x				
45-Bx	×			
46-1x		×	No signal from the right side impact sensor (second)	(see page 23-87)
46-2x		×	Internal failure of the right side impact sensor (second)	(see page 23-90)
46-3x				
46-Bx	×			
51-2x		×	Internal failure of SRS unit	(see page 23-91)
51-4x				
52-8x	×			
52-9x				
52-Ax	×			(see page 23-92)
52-Bx				
52-Cx				
52-Dx				
52-Ex				
52-Fx				
53-1x		×		(see page 23-93)
53-2x		×		
53-3x				
53-4x				
54-1x				(see page 23-94)
54-2x				
54-3x				
54-4x		×		
54-5x				
54-6x				
54-7x				
55-1x				(see page 23-95)
55-2x				
55-3x		×		
55-4x				

NOTE: The "x" at the end of each DTC denotes a numeric character (0 thru 9) or an alpha character (A thru F) that you will see on the HDS display. The character is unrelated to your troubleshooting; it designates the SRS unit manufacturer and other details used for product analysis.

* (1): The SRS indicator turns on and stays on whenever the ignition switch is in the ON position, or until the DTC is cleared.
* (2): The SRS indicator turns on when the DTC is set. The SRS indicator will not turn on after the ignition switch is cycled from ON to OFF (if the circuit returns to normal), but the DTC will be stored in the SRS unit.

Protected by AP

TRW SRS Unit

DTC	Latch * (1)	Reset * (2)	Detection Item	Notes
61-1x		×	Open in driver's seat belt buckle switch	(see page 23-96)
61-2x			Short in driver's seat belt buckle switch	(see page 23-99)
62-1x			Open in front passenger's seat belt buckle switch	(see page 23-102)
62-2x			Short in front passenger's seat belt buckle switch	(see page 23-105)
85-4x			Faulty OPDS unit	(see page 23-112)
85-5x				
85-61			No signal from OPDS unit	(see page 23-108)
85-62			Non-stipulated response data	
85-63			Model ID code or variation code inconsistent	(see page 23-112)
85-64			ECU serial ID code inconsistent	
85-71			OPDS unit not initialized	
85-78				
85-79			OPDS sensor drift check failure	
85-85	×	×	Non-stipulafed DTDC is received	
85-86				
85-87				
86-1x		×	Faulty OPDS seat-back sensor	(see page 23-113)
86-2x			Faulty OPDS seat support sensor	
87-31			Side airbag cutoff indicator does not come on	(see page 23-114)
87-32			Side airbag cutoff indicator stays on	
91-1x			Internal failure of the SRS unit	(see page 23-117)
A1-1x			Faulty power supply (VA line)	(see page 23-117)
A2-1x			Faulty power supply (VB line)	(see page 23-119)
E4-11			Front passenger's side airbag does not deploy by OPDS operation	(see page 23-116)
F1-11			Driver's airbag and driver's seat belt tensioner deployed	
F2-11			Front passenger's airbag and front passenger's seat belt tensioner deployed	
F3-11			Driver's side airbag and driver's seat belt tensioner (and left side curtain airbag) deployed	
F4-11			Front passenger's side airbag and front passenger's seat belt tensioner (and right side curtain airbag) deployed	

NOTE: The "x" at the end of each DTC denotes a numeric character (0 thru 9) or an alpha character (A thru F) that you will see on the HDS display. The character is unrelated to your troubleshooting; it designates the SRS unit manufacturer and other details used for product analysis.

* (1): The SRS indicator turns on and stays on whenever the ignition switch is in the ON position, or until the DTC is cleared.
* (2): The SRS indicator turns on when the DTC is set. The SRS indicator will not turn on after the ignition switch is cycled from ON to OFF (if the circuit returns to normal), but the DTC will be stored in the SRS unit.

Protected by A R

Symptom Troubleshooting Index

Symptom	Diagnostic procedure	Also check for
SRS indicator does not come on	Symptom Troubleshooting (see page 23-121)	
SRS indicator stays on, but no DTCs are stored	Symptom Troubleshooting (see step 1 on page 23-123)	
Side airbag cutoff indicator stays on after bulb check, and no DTCs are stored, or side airbag cutoff indicator is flashing	• Make sure nothing is on the front passenger's seat. • If the side airbag cutoff indicator stays on after the ignition switch is turned ON (II), initialize the OPDS unit (see page 23-26). – If the side airbag cutoff indicator operates normally, the system is OK.	DTC 87-32 troubleshooting
Side airbag cutoff indicator is flashing	• Make sure nothing is on the front passenger's seat. • If the side airbag cutoff indicator stays on after the ignition switch is turned ON (II), initialize the OPDS unit (see page 23-26). – If the side airbag cutoff indicator operates normally, the system is OK.	DTC 87-32 troubleshooting

Protected by AR

System Description

SRS Components

Airbags

The SRS is a safety device which, when used with the seat belt, is designed to help protect the driver and front passenger in a frontal impact exceeding a certain set limit. The system consists of the SRS unit, including safing sensor and impact sensor (A), the cable reel (B), the driver's airbag (C), the front passenger's airbag (D), side airbags (E), seat belt tensioners (I), and front impact sensors (J).

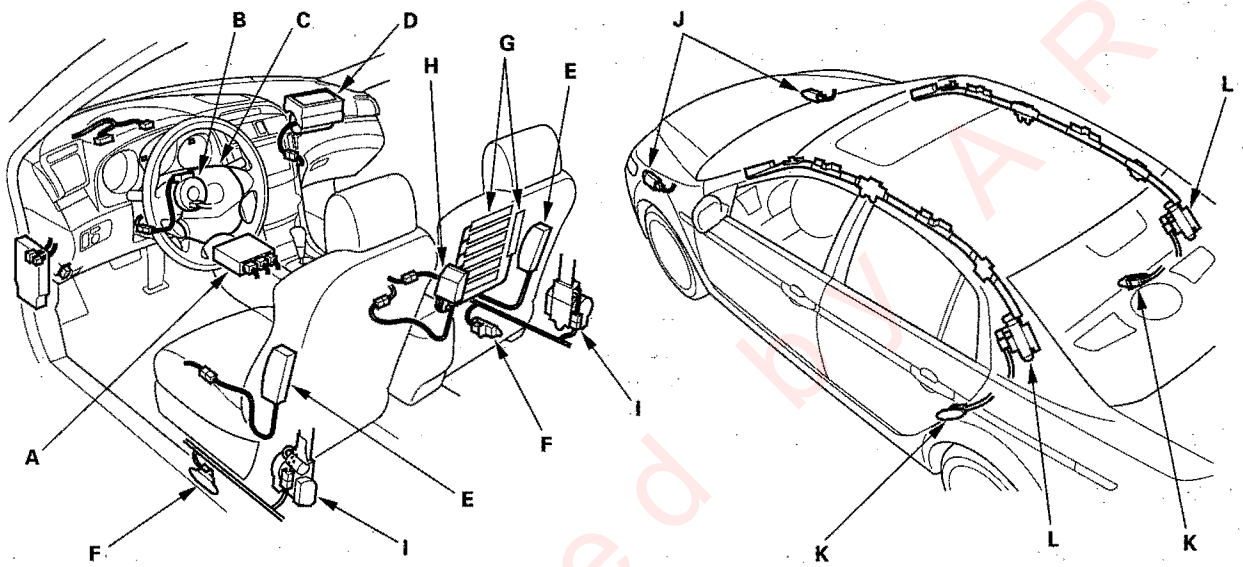

Side Airbags

The side airbags (E) are in each front seat-back. They help protect the upper torso of the driver or front seat passenger during a moderate to severe side impact. Side impact sensors (first) (F) in each door sill and in the SRS unit detect such an impact and instantly inflate the driver's or the passenger's side airbag. Only one side airbag will deploy during a side impact. If the impact is on the passenger's side, the passenger's side airbag will deploy even if there is no passenger.

Side Curtain Airbags

The side curtain airbags (L) are in each side of the roof. They help protect the head of the driver, front passenger, and passengers in the rear outer seats during a moderate to severe side impact. Side impact sensors (first) (F) in each front door sill, side impact sensors (second) (K) in each rear door sill, and the SRS unit detect such an impact and instantly inflate the driver's or the passenger's side curtain airbag. A side impact causes the side curtain airbag and the side airbag on the impacted side to deploy at the same time.

Seat Belt Tensioners

The seat belt tensioners are linked with the SRS airbags to further increase the effectiveness of the seat belt. In a front-end collision, the tensioners instantly retract the belt firmly to secure the occupants in their seats.

OPDS

The side airbag system also includes an occupant position detection system (OPDS). This system consists of sensors (G) and a OPDS unit (H) in the front passenger's seat-back. The OPDS unit sends occupant height and position data to the SRS unit. If the OPDS unit determines that the front passenger is of small stature (for example, a child) or the front passenger is leaning into the side airbag deployment path, the SRS unit will automatically disable the passenger's side airbag. The SRS unit will also disable the airbag when the OPDS detects certain objects on the seat. When the side airbag is disabled, the side airbag cutoff indicator on the instrument panel alerts the driver that the passenger's side airbag will not deploy in a side impact. When the object is removed, or the passenger sits upright, the side airbag cutoff indicator will go off after a few seconds, alerting the driver that the passenger's side airbag will deploy in a side impact.

(cont'd)

Protected by AR

System Description (cont'd)

SRS Operation

The main circuit in the SRS unit senses and judges the force of impact and, if necessary, ignites the inflator charges. If battery voltage is too low or power is disconnected due to the impact, the voltage regulator and the back-up power circuit, respectively, will keep voltage at a constant level.

For the SRS to operate

Seat Belt Tensioners

(1) A front impact sensor must activate and send electric signals to the microprocessor.
(2) The microprocessor must compute the signals and send a deployment signal to the tensioners.
(3) The charges must ignite and deploy the tensioners.

Driver's and Front Passenger's Airbag(s)

(1) A front impact sensor must activate, and send electric signals to the microprocessor.
(2) The microprocessor must compute the signals, and send a deployment signal to the airbag inflator(s).
(3) The inflators that received signals must ignite and deploy the airbags.

Side Airbag(s)

(1) A side impact sensor must activate, and send electric signals to the microprocessor.
(2) The microprocessor must compute the signals and send a deployment signal to the side airbag inflator(s). However, the microprocessor cuts off the signals to the front passenger's side airbag if the SRS unit determines that the front passenger's head is in the deployment path of the side airbag.
(3) The inflator that received the signal must ignite and deploy the side airbag.

Side Curtain Airbag(s)

(1) Side impact sensors must activate, and send electrical signals to the microprocessor.
(2) The microprocessor must compute the signals and send a deployment signal to the side curtain airbag and side airbag inflator(s).
(3) The inflator that received the signals must ignite and deploy the side curtain airbag and side airbag at the same time.

Side Airbag Cutoff Indicator/OPDS Operation

The indicator comes on if the front passenger's seat is occupied by a small adult or child who is leaning into the deployment path, or an object (grocery bag, briefcase, purse, etc.) is in the seat. This indicates the passenger's side airbag is off and will not deploy; there is no problem with the side airbag. If the passenger sits upright or moves to another seat, or you remove the object from the seat, the light should go off.

Protected by AR

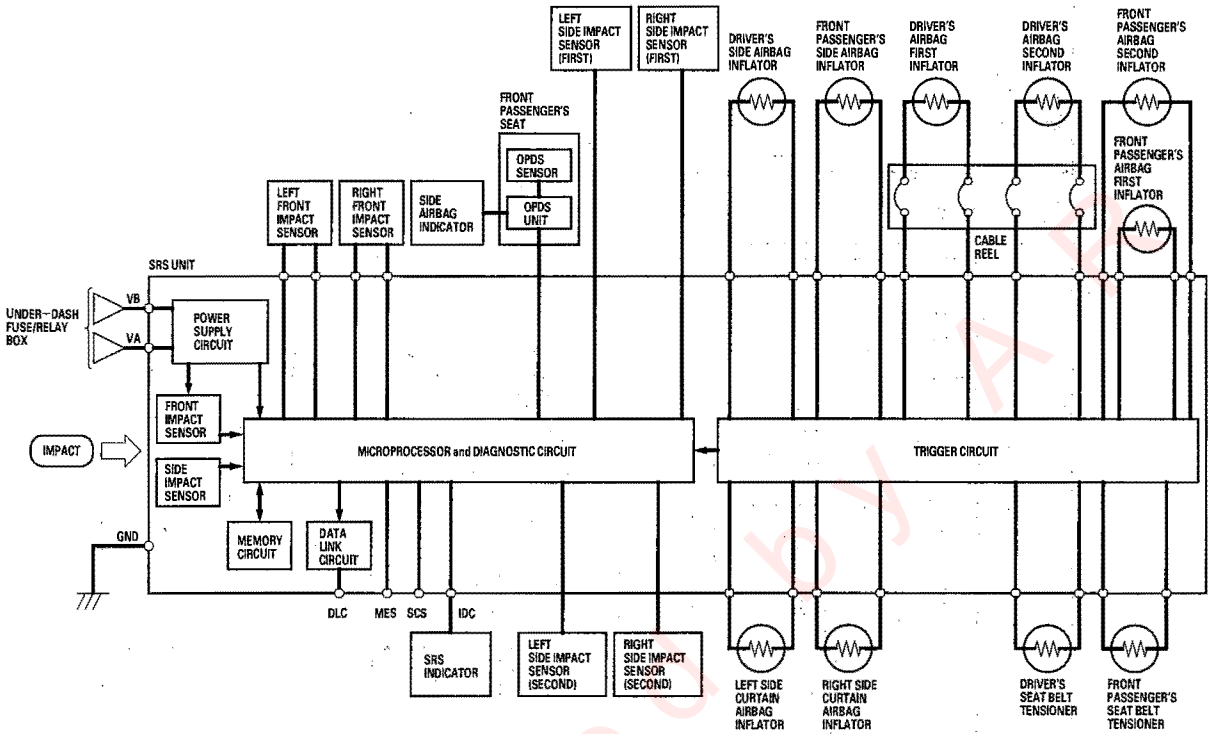

Self-diagnosis System

A self-diagnosis circuit is built into the SRS unit; when the ignition switch is turned ON (II), the SRS indicator comes on and goes off after about 6 seconds if the system is operating normally. If the indicator does not come on, or does not go off after 6 seconds, or if it comes on while driving, it indicates an abnormality in the system. The system must be inspected and repaired as soon as possible. For better serviceability, the SRS unit memory stores a DTC that relates to the cause of the malfunction, and the unit is connected to the data link connector (DLC). This information can be read with the HDS when it is connected to the DLC (16P) (see page 23-24).

NOTE: If the battery negative cable is to be disconnected during troubleshooting, do the following.

- Make sure you have the anti-theft code for the radio and the navigation system, then write down the frequencies for the radio's preset buttons.
- Do the engine idle learn procedure (see page 11-239).
- Do the power window control unit reset procedure (see page 22-221).

Protected by A

Circuit Diagram

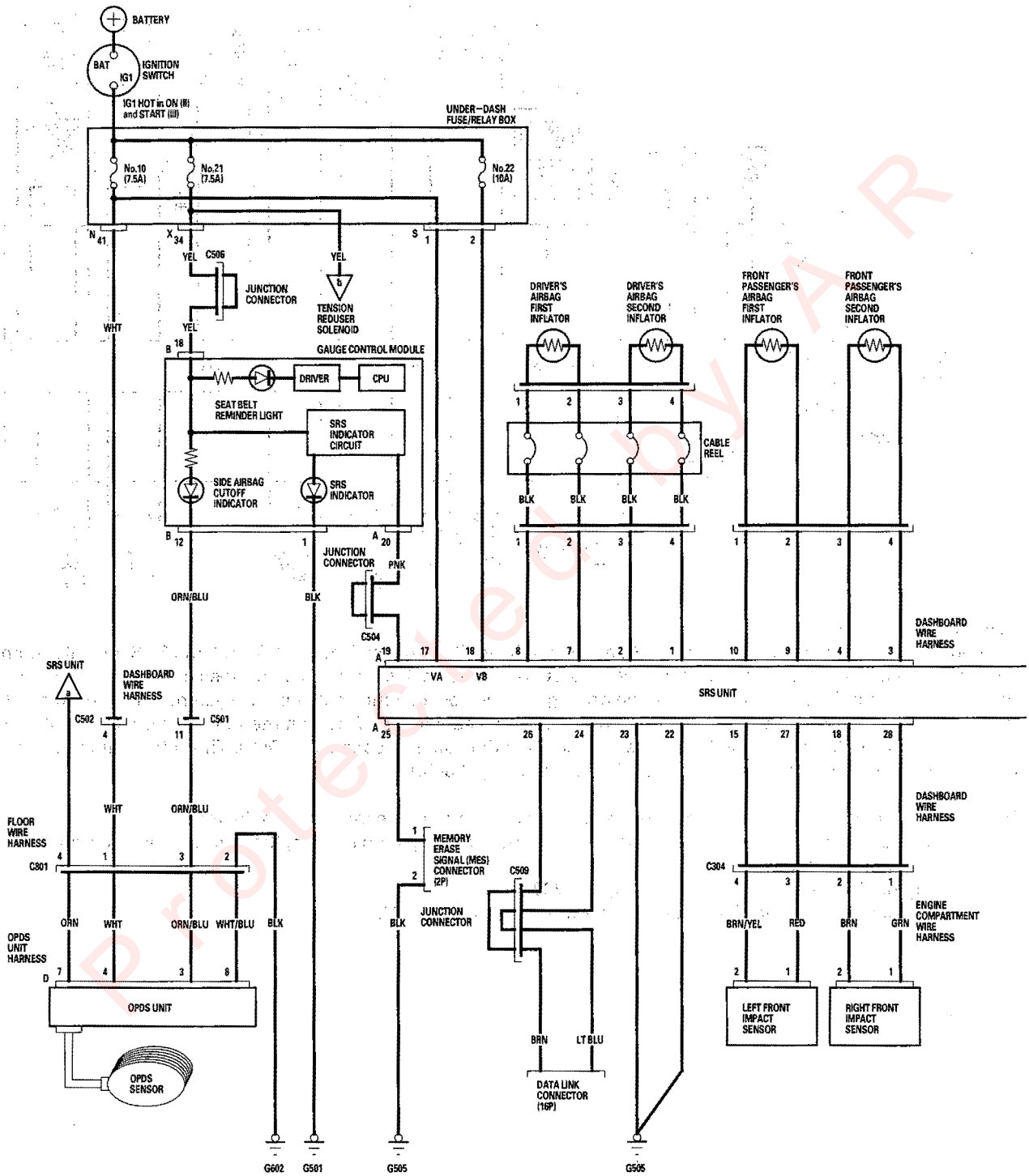

Protected by A R

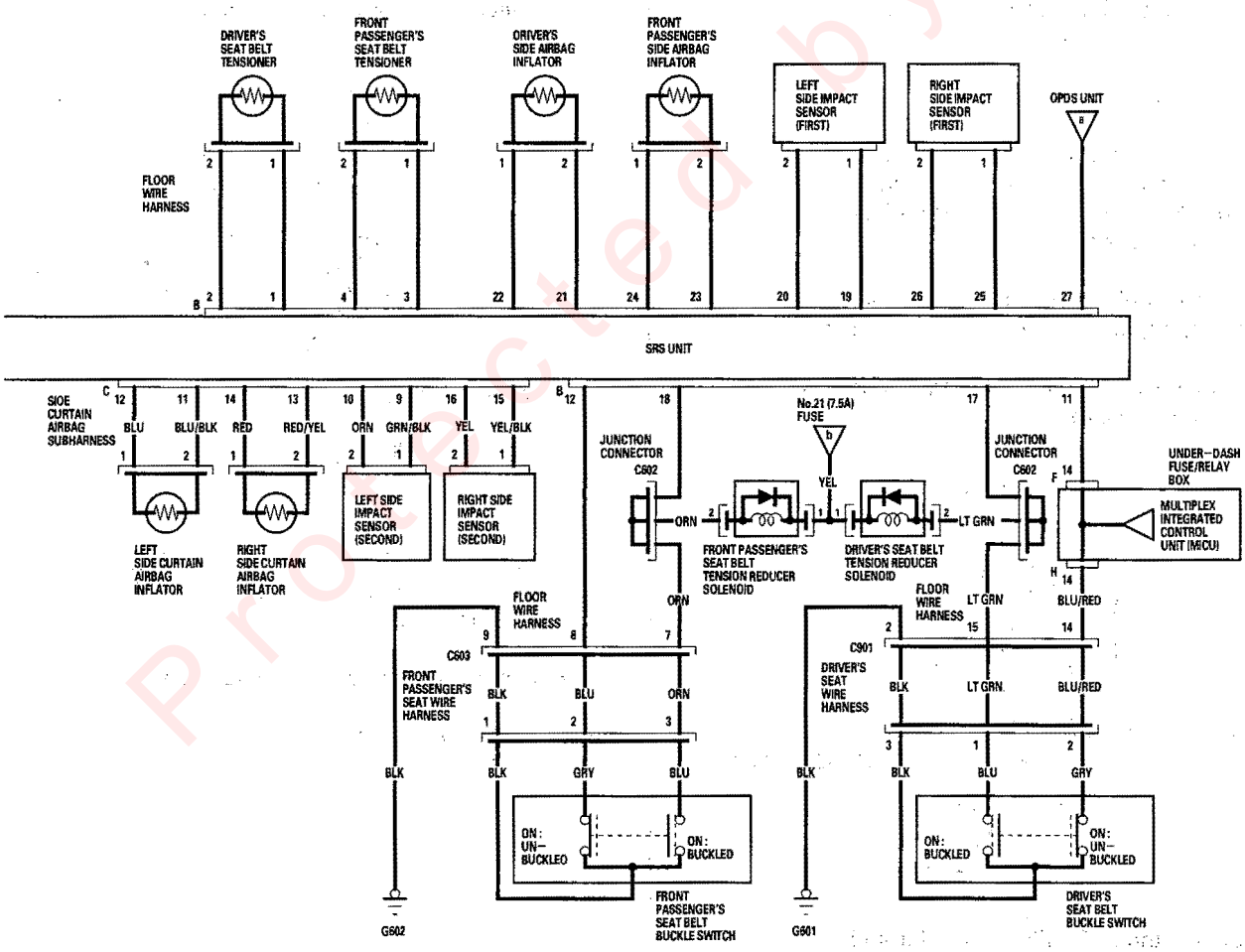

Protected by A R

DTC Troubleshooting

DTC 11-1x (11-10 to 11-19, 11-1A to 11-1F): Open or Increased Resistance in Driver's Airbag First Inflator

DTC 11-4x (11-40 to 11-49, 11-4A to 11-4F): Open or Increased Resistance in Driver's Airbag Second Inflator

Special Tools Required
- SRS inflator simulator 07SAZ-TB4011A
- SRS simulator lead F 07XAZ-SZ30100

1. Erase the DTC memory (see page 23-25).
2. Turn the ignition switch ON (II), and check that the SRS indicator comes on for about 6 seconds and then goes off.

   Does the SRS indicator stay on, and is DTC 11-1x or 11-4x indicated?

   YES—Go to step 3.

   NO—Intermittent failure, system is OK at this time. Go to Troubleshooting Intermittent Failures (see page 23-26). If another DTC is indicated, go to the DTC troubleshooting index.
3. Turn the ignition switch OFF. Disconnect the battery negative cable, and wait for 3 minutes.
4. Disconnect the driver's airbag 4P connector (A) from the cable reel.

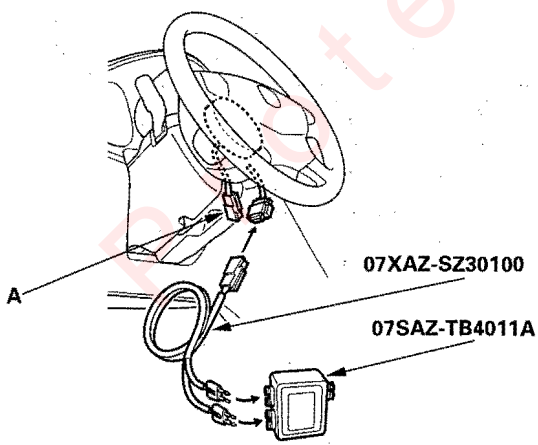

5. Connect the SRS inflator simulator (2 Ω connectors) and the simulator lead to the cable reel.
6. Reconnect the battery negative cable.
7. Erase the DTC memory.
8. Read the DTC (see page 23-24).

   Is DTC 11-1x or 11-4x indicated?

   YES—Go to step 9.

   NO—Open or increased resistance in the driver's airbag first or second inflator; replace the driver's airbag (see page 23-128).■
9. Turn the ignition switch OFF. Disconnect the battery negative cable, and wait for 3 minutes.
10. Disconnect the dashboard wire harness 4P connector (A) from the cable reel.

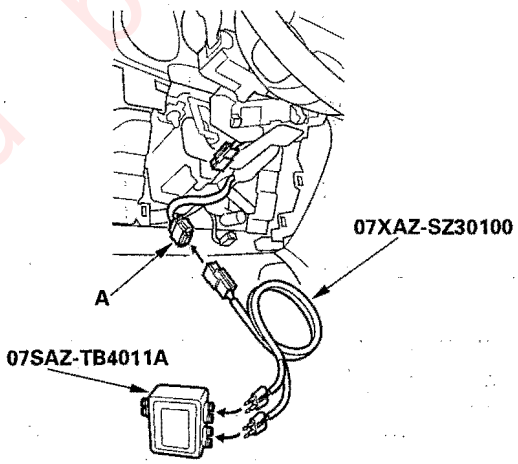

11. Connect the SRS inflator simulator (2 Ω connectors) and the simulator lead to the dashboard wire harness.
12. Reconnect the battery negative cable.
13. Erase the DTC memory.

Protected by AR

14. Read the DTC.

Is DTC 11-1x or 11-4x indicated?

YES—Go to step 15.

NO—Open or increased resistance in the cable reel; replace the cable reel (see page 23-140).■

15. Turn the ignition switch OFF. Disconnect the battery negative cable, and wait for 3 minutes.

16. Disconnect SRS unit connector A (28P) from the SRS unit (see step 7 on page 23-23). Do not disconnect SRS simulator lead F from dashboard wire harness 4P connector.

17. Disconnect the SRS inflator simulator from SRS simulator lead F.

18. Check resistance between the terminals of SRS simulator lead F. There should be 1 Ω or less.

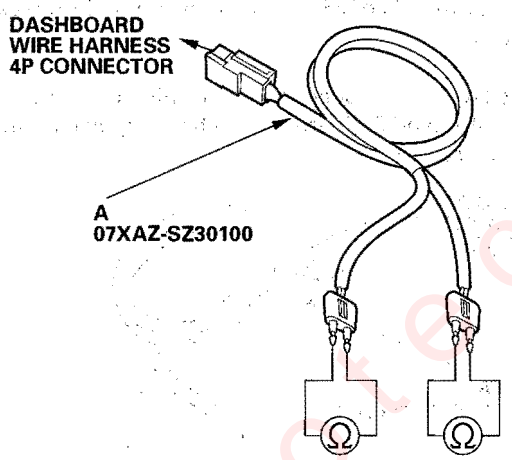

Is the resistance as specified?

YES—Faulty SRS unit or poor contact at SRS unit connector A (28P) and the SRS unit. Check the connection between the connector and the SRS unit. If the connection is OK, replace the SRS unit (see page 23-143).■

NO—Open or increased resistance in the dashboard wire harness; replace the dashboard wire harness.■

DTC 11-3x (11-30 to 11-39, 11-3A to 11-3F): Short to Another Wire or Decreased Resistance in Driver's Airbag First Inflator

DTC 11-6x (11-60 to 11-69, 11-6A to 11-6F): Short to Another Wire or Decreased Resistance in Driver's Airbag Second Inflator

Special Tools Required
- SRS inflator simulator 07SAZ-TB4011A
- SRS simulator lead F 07XAZ-SZ30100
- SRS short canceller 070AZ-SAA0100

1. Erase the DTC memory (see page 23-25).

2. Turn the ignition switch ON (II), and check that the SRS indicator comes on for about 6 seconds and then goes off.

Does the SRS indicator stay on, and is DTC 11-3x or 11-6x indicated?

YES—Go to step 3.

NO—Intermittent failure, system is OK at this time. Go to Troubleshooting Intermittent Failures (see page 23-26). If another DTC is indicated, go to the DTC troubleshooting index.

3. Turn the ignition switch OFF. Disconnect the battery negative cable, and wait for 3 minutes.

4. Disconnect the driver's airbag 4P connector (A) from the cable reel.

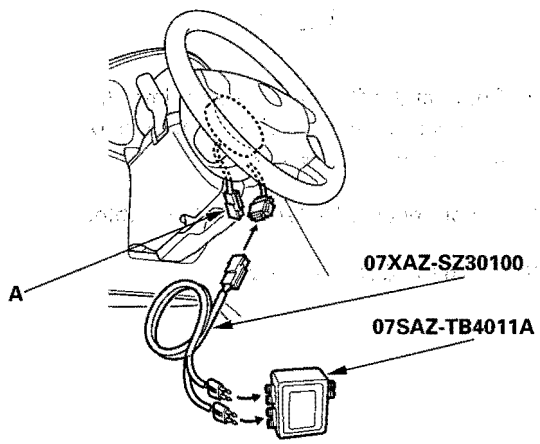

5. Connect the SRS inflator simulator (2 Ω connectors) and the simulator lead to the cable reel.

(cont'd)

Protected by AR

DTC Troubleshooting (cont'd)

6. Reconnect the battery negative cable.
7. Erase the DTC memory.
8. Read the DTC (see page 23-24).

   Is DTC 11-3x or 11-6x indicated?

   YES—Go to step 9.

   NO—Short in the driver's airbag first or second inflator; replace the driver's airbag (see page 23-128).■

9. Turn the ignition switch OFF. Disconnect the battery negative cable, and wait for 3 minutes.
10. Disconnect the dashboard wire harness 4P connector (A) from the cable reel.

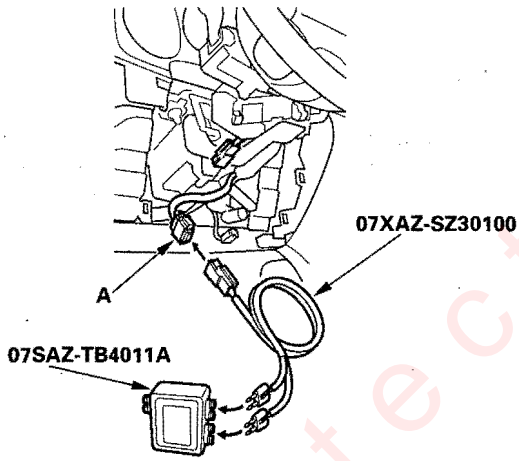

11. Connect the SRS inflator simulator (2 Ω connectors) and the simulator lead to the dashboard wire harness.
12. Reconnect the battery negative cable.
13. Erase the DTC memory.
14. Read the DTC.

    Is DTC 11-3x or 11-6x indicated?

    YES—Go to step 15.

    NO—Short in the cable reel; replace the cable reel (see page 23-140).■

15. Turn the ignition switch OFF. Disconnect the battery negative cable, and wait for 3 minutes.
16. Disconnect SRS unit connector A (28P) from the SRS unit (see step 7 on page 23-23). Do not disconnect the SRS simulator lead F from the dashboard wire harness 4P connector.
17. Disconnect the SRS inflator simulator from SRS simulator lead F.
18. Connect an SRS short canceller (070AZ-SAA0100) to the No. 7 and No. 8 terminals and the No. 1 and No. 2 terminals of SRS unit connector A (28P) (see page 23-19).
19. Check resistance between the terminals of SRS simulator lead F. There should be an open circuit, or at least 1 MΩ.

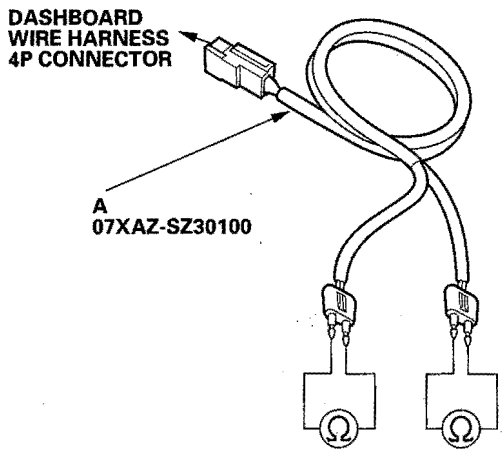

Is the resistance as specified?

YES—Faulty SRS unit; replace the SRS unit (see page 23-143).■

NO—Short in the dashboard wire harness; replace the dashboard wire harness.■

Protected by AR

DTC 11-8x (11-80 to 11-89, 11-8A to 11-8F): Short to Power in Driver's Airbag First Inflator

DTC 11-Ax (11-A0 to 11-A9, 11-AA to 11-AF): Short to Power in Driver's Airbag Second Inflator

Special Tools Required
- SRS inflator simulator 07SAZ-TB4011A
- SRS simulator lead F 07XAZ-SZ30100

1. Erase the DTC memory (see page 23-25).
2. Turn the ignition switch ON (II), and check that the SRS indicator comes on for about 6 seconds and then goes off.

   Does the SRS indicator stay on, and is DTC 11-8x or 11-Ax indicated?

   YES—Go to step 3.

   NO—Intermittent failure, system is OK at this time. Go to Troubleshooting Intermittent Failures (see page 23-26). If another DTC is indicated, go to the DTC troubleshooting index.
3. Turn the ignition switch OFF. Disconnect the battery negative cable, and wait for 3 minutes.
4. Disconnect the driver's airbag 4P connector (A) from the cable reel.

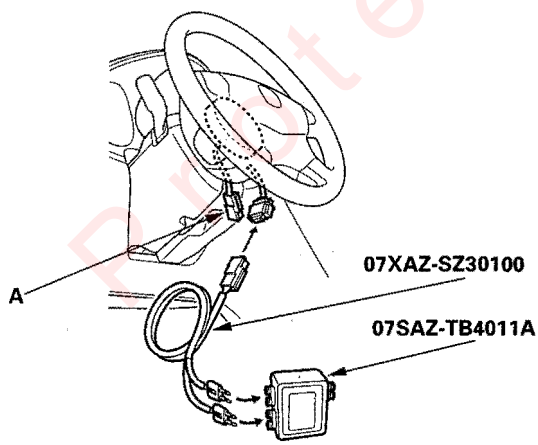

5. Connect the SRS inflator simulator (2 Ω connectors) and the simulator lead to the cable reel.
6. Reconnect the battery negative cable.
7. Erase the DTC memory.
8. Read the DTC (see page 23-24).

   Is DTC 11-8x or 11-Ax indicated?

   YES—Go to step 9.

   NO—Short to power in the driver's airbag first or second inflator; replace the driver's airbag (see page 23-128).■
9. Turn the ignition switch OFF. Disconnect the battery negative cable, and wait for 3 minutes.
10. Disconnect the dashboard wire harness 4P connector (A) from the cable reel.

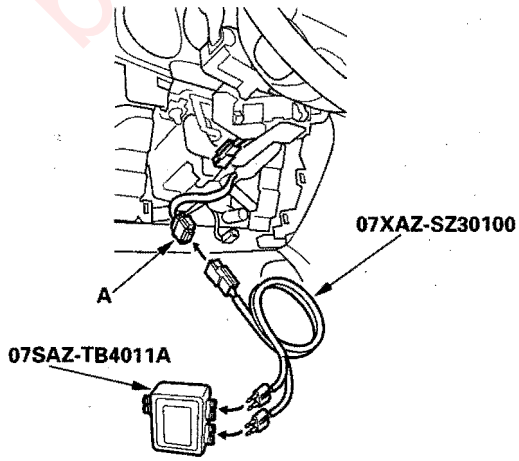

11. Connect the SRS inflator simulator (2 Ω connectors) and the simulator lead to the dashboard wire harness.
12. Reconnect the battery negative cable.
13. Erase the DTC memory.

(cont'd)

Protected by AR

DTC Troubleshooting (cont'd)

14. Read the DTC.

    Is DTC 11-8x or 11-Ax indicated?

    YES—Go to step 15.

    NO—Short to power in the cable reel; replace the cable reel (see page 23-140).■

15. Turn the ignition switch OFF. Disconnect the battery negative cable, and wait for 3 minutes.

16. Disconnect SRS unit connector A (28P) from the SRS unit (see step 7 on page 23-23). Do not disconnect the SRS simulator lead F from the dashboard wire harness 4P connector.

17. Disconnect the SRS inflator simulator from SRS simulator lead F.

18. Reconnect the battery negative cable.

19. Turn the ignition switch ON (II).

20. Check for voltage between each terminal of SRS simulator lead F and body ground. There should be 0.5 V or less.

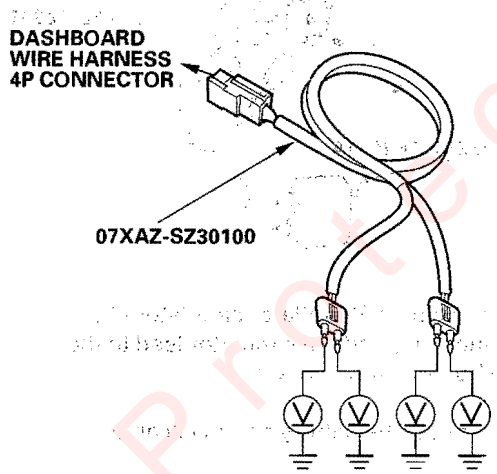

Is the voltage as specified?

YES—Faulty SRS unit; replace the SRS unit (see page 23-143).■

NO—Short to power in the dashboard wire harness; replace the dashboard wire harness.■

DTC 11-9x (11-90 to 11-99, 11-9A to 11-9F): Short to Ground in Driver's Airbag First Inflator

DTC 11-Bx (11-B0 to 11-B9, 11-BA to 11-BF): Short to Ground in Driver's Airbag Second Inflator

Special Tools Required
- SRS inflator simulator 07SAZ-TB4011A
- SRS simulator lead F 07XAZ-SZ30100

1. Erase the DTC memory (see page 23-25).

2. Turn the ignition switch ON (II), and check that the SRS indicator comes on for about 6 seconds and then goes off.

   Does the SRS indicator stay on, and is DTC 11-9x or 11-Bx indicated?

   YES—Go to step 3.

   NO—Intermittent failure, system is OK at this time. Go to Troubleshooting Intermittent Failures (see page 23-26). If another DTC is indicated, go to the DTC troubleshooting index.

3. Turn the ignition switch OFF. Disconnect the battery negative cable, and wait for 3 minutes.

4. Disconnect the driver's airbag 4P connector (A) from the cable reel.

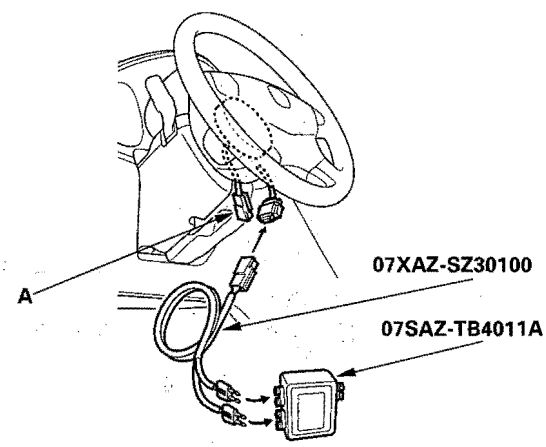

5. Connect the SRS inflator simulator (2 Ω connectors) and the simulator lead to the cable reel.

Protected by AR

6. Reconnect the battery negative cable.

7. Erase the DTC memory.

8. Read the DTC (see page 23-24).

   Is DTC 11-9x or 11-Bx indicated?

   YES – Go to step 9.

   NO – Short to ground in the driver's airbag first or second inflator; replace the driver's airbag (see page 23-128). ■

9. Turn the ignition switch OFF. Disconnect the battery negative cable, and wait for 3 minutes.

10. Disconnect the dashboard wire harness 4P connector (A) from the cable reel.

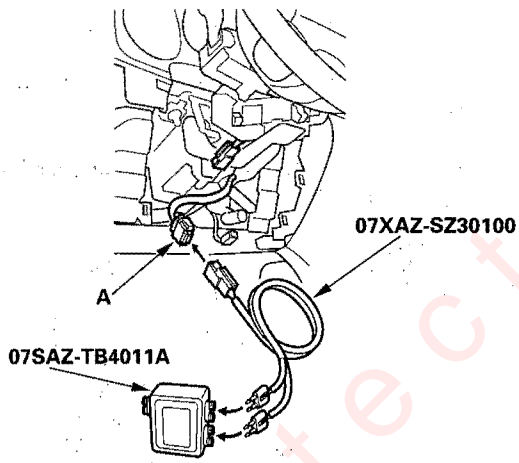

11. Connect the SRS inflator simulator (2 Ω connectors) and the simulator lead to the dashboard wire harness.

12. Reconnect the battery negative cable.

13. Erase the DTC memory.

14. Read the DTC.

    Is DTC 11-9x or 11-Bx indicated?

    YES – Go to step 15.

    NO – Short to ground in the cable reel; replace the cable reel (see page 23-140). ■

15. Turn the ignition switch OFF. Disconnect the battery negative cable, and wait for 3 minutes.

16. Disconnect SRS unit connector A (28P) from the SRS unit (see step 7 on page 23-23). Do not disconnect the SRS simulator lead F from the dashboard wire harness 4P connector.

17. Disconnect the SRS inflator simulator from SRS simulator lead F.

18. Check resistance between each terminal of SRS simulator lead F and body ground. There should be an open circuit, or at least 1 MΩ.

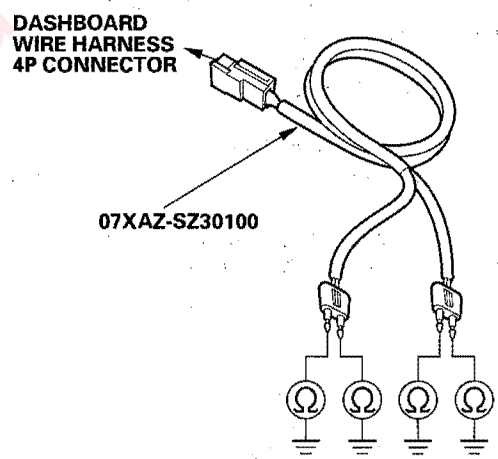

Is the resistance as specified?

YES – Faulty SRS unit; replace the SRS unit (see page 23-143). ■

NO – Short to ground in the dashboard wire harness; replace the dashboard wire harness. ■

Protected by AR

DTC Troubleshooting (cont'd)

DTC 12-1x (12-10 to 12-19, 12-1A to 12-1F): Open or Increased Resistance in Front Passenger's Airbag First Inflator

DTC 12-4x (12-40 to 12-49, 12-4A to 12-4F): Open or Increased Resistance in Front Passenger's Airbag Second Inflator

Special Tools Required
- SRS inflator simulator 07SAZ-TB4011A
- SRS simulator lead F 07XAZ-SZ30100

1. Erase the DTC memory (see page 23-25).
2. Turn the ignition switch ON (II), and check that the SRS indicator comes on for about 6 seconds and then goes off.

   Does the SRS indicator stay on, and is DTC 12-1x or 12-4x indicated?

   YES—Go to step 3.

   NO—Intermittent failure, system is OK at this time. Go to Troubleshooting Intermittent Failures (see page 23-26). If another DTC is indicated, go to the DTC troubleshooting index.
3. Turn the ignition switch OFF. Disconnect the battery negative cable, and wait for 3 minutes.
4. Disconnect the front passenger's airbag 4P connector (A) from the dashboard wire harness (B).

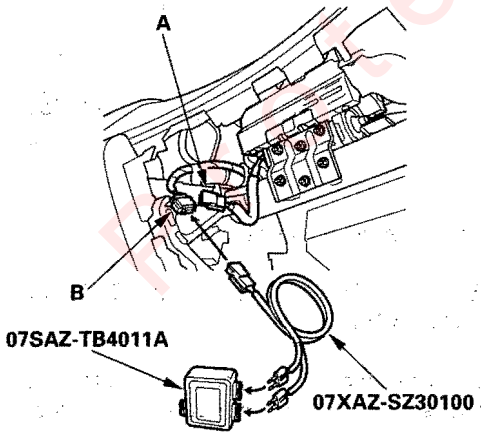

5. Connect the SRS inflator simulator (2 Ω connectors) and the simulator lead to the dashboard wire harness.
6. Reconnect the battery negative cable.
7. Erase the DTC memory.
8. Read the DTC (see page 23-24).

   Is DTC 12-1x or 12-4x indicated?

   YES—Go to step 9.

   NO—Open or increased resistance in the front passenger's airbag first or second inflator; replace the front passenger's airbag (see page 23-129).■
9. Turn the ignition switch OFF. Disconnect the battery negative cable, and wait for 3 minutes.
10. Disconnect SRS unit connector A (28P) from the SRS unit (see step 7 on page 23-23). Do not disconnect the SRS simulator lead F from the dashboard wire harness 4P connector.
11. Disconnect the SRS inflator simulator from SRS simulator lead F.
12. Check resistance between the terminals of SRS simulator lead F. There should be 1 Ω or less.

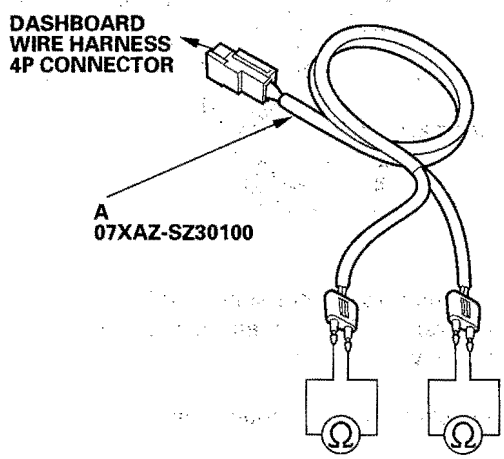

Is the resistance as specified?

YES—Faulty SRS unit or poor contact at SRS unit connector A (28P). Check the connection; if the connection is OK, replace the SRS unit (see page 23-143).■

NO—Open or increased resistance in the dashboard wire harness; replace the dashboard wire harness.■

DTC 12-3x (12-30 to 12-39, 12-3A to 12-3F): Short to Another Wire or Decreased Resistance in Front Passenger's Airbag First Inflator

DTC 12-6x (12-60 to 12-69, 12-6A to 12-6F): Short to Another Wire or Decreased Resistance in Front Passenger's Airbag Second Inflator

Special Tools Required
- SRS inflator simulator 07SAZ-TB4011A
- SRS simulator lead F 07XAZ-SZ30100
- SRS short canceller 070AZ-SAA0100

1. Erase the DTC memory (see page 23-25).
2. Turn the ignition switch ON (II), and check that the SRS indicator comes on for about 6 seconds and then goes off.

   Does the SRS indicator stay on, and is DTC 12-3x or 12-6x indicated?

   YES—Go to step 3.

   NO—Intermittent failure, system is OK at this time. Go to Troubleshooting Intermittent Failures (see page 23-26). If another DTC is indicated, go to the DTC troubleshooting index.
3. Turn the ignition switch OFF. Disconnect the battery negative cable, and wait for 3 minutes.
4. Disconnect the front passenger's airbag 4P connector (A) from the dashboard wire harness (B).

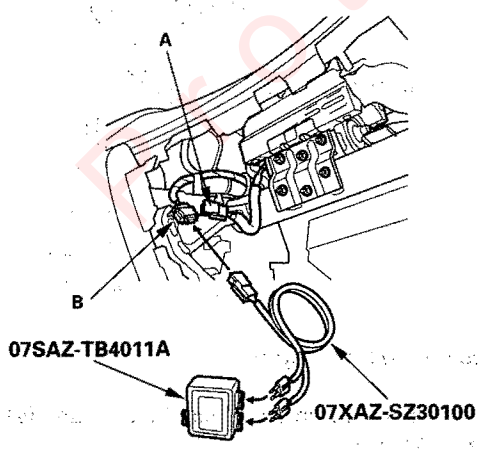

5. Connect the SRS inflator simulator (2 Ω connectors) and the simulator lead to dashboard wire harness.
6. Reconnect the battery negative cable.
7. Erase the DTC memory.
8. Read the DTC (see page 23-24).

   Is DTC 12-3x or 12-6x indicated?

   YES—Go to step 9.

   NO—Short in the front passenger's airbag first or second inflator; replace the front passenger's airbag (see page 23-129). ■
9. Turn the ignition switch OFF. Disconnect the battery negative cable, and wait for 3 minutes.
10. Disconnect SRS unit connector A (28P) from the SRS unit (see step 7 on page 23-23). Do not disconnect the SRS simulator lead F from the dashboard wire harness 4P connector.
11. Disconnect the SRS inflator simulator from SRS simulator lead F.
12. Connect the SRS short canceller (070AZ-SAA0100) to the No. 9 and No. 10 terminals, and the No. 3 and No. 4 terminals of SRS unit connector A (28P) (see page 23-19).
13. Check resistance between the terminals of SRS simulator lead F. There should be an open circuit, or at least 1 MΩ.

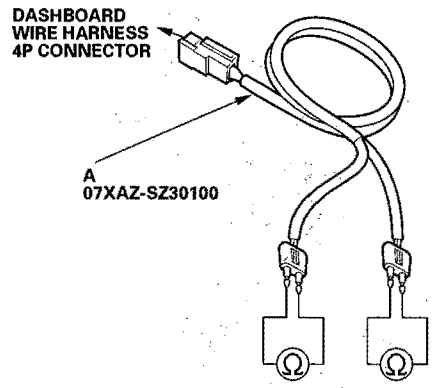

Is the resistance as specified?

YES—Faulty SRS unit; replace the SRS unit (see page 23-143). ■

NO—Short in the dashboard wire harness; replace the dashboard wire harness. ■

Protected by AR

DTC Troubleshooting (cont'd)

DTC 12-8x (12-80 to 12-89, 12-8A to 12-8F): Short to Power in Front Passenger's Airbag First Inflator

DTC 12-Ax (12-A0 to 12-A9, 12-AA to 12-AF): Short to Power in Front Passenger's Airbag Second Inflator

Special Tools Required
- SRS inflator simulator 07SAZ-TB4011A
- SRS simulator lead F 07XAZ-SZ30100

1. Erase the DTC memory (see page 23-25).
2. Turn the ignition switch ON (II), and check that the SRS indicator comes on for about 6 seconds and then goes off.

   Does the SRS indicator stay on, and is DTC 12-8x or 12-Ax indicated?

   YES—Go to step 3.

   NO—Intermittent failure, system is OK at this time. Go to Troubleshooting Intermittent Failures (see page 23-26). If another DTC is indicated, go to the DTC troubleshooting index.
3. Turn the ignition switch OFF. Disconnect the battery negative cable, and wait for 3 minutes.
4. Disconnect the front passenger's airbag 4P connector (A) from the dashboard wire harness (B).

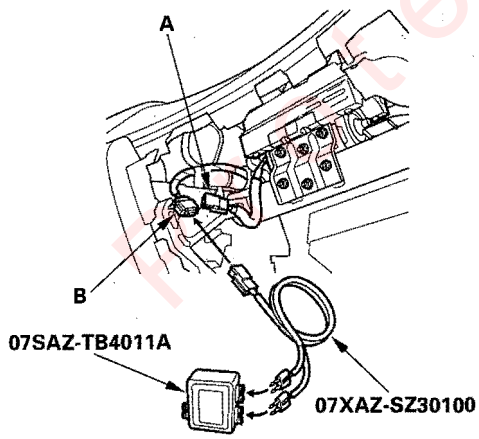

5. Connect the SRS inflator simulator (2 Ω connectors) and the simulator lead to the dashboard wire harness.
6. Reconnect the battery negative cable.
7. Erase the DTC memory.
8. Read the DTC (see page 23-24).

   Is DTC 12-8x or 12-Ax indicated?

   YES—Go to step 9.

   NO—Short to power in the front passenger's airbag first or second inflator; replace the front passenger's airbag (see page 23-129).■
9. Turn the ignition switch OFF. Disconnect the battery negative cable, and wait for 3 minutes.
10. Disconnect SRS unit connector A (28P) from the SRS unit (see step 7 on page 23-23). Do not disconnect the SRS simulator lead F from the dashboard wire harness 4P connector.
11. Disconnect the SRS inflator simulator from SRS simulator lead F.
12. Reconnect the battery negative cable.
13. Turn the ignition switch ON (II).
14. Check for voltage between each terminal of SRS simulator lead F and body ground. There should be 0.5 V or less.

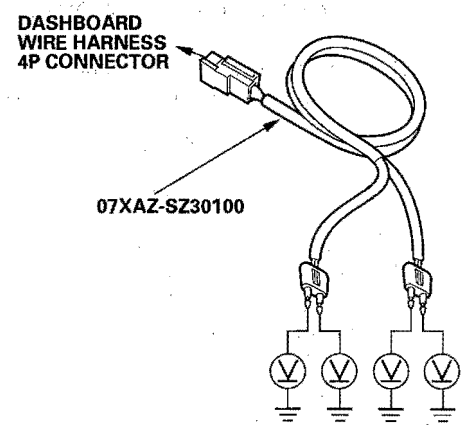

Is the voltage as specified?

YES—Faulty SRS unit; replace the SRS unit (see page 23-143).■

NO—Short to power in the dashboard wire harness; replace the dashboard wire harness.■

Protected by AR

DTC 12-9x (12-90 to 12-99, 12-9A to 12-9F): Short to Ground in Front Passenger's Airbag First Inflator

DTC 12-Bx (12-B0 to 12-B9, 12-BA to 12-BF): Short to Ground in Front Passenger's Airbag Second Inflator

Special Tools Required
- SRS inflator simulator 07SAZ-TB4011A
- SRS simulator lead F 07XAZ-SZ30100

1. Erase the DTC memory (see page 23-25).

2. Turn the ignition switch ON (II), and check that the SRS indicator comes on for about 6 seconds and then goes off.

   Does the SRS indicator stay on, and is DTC 12-9x or 12-Bx indicated?

   YES—Go to step 3.

   NO—Intermittent failure, system is OK at this time. Go to Troubleshooting Intermittent Failures (see page 23-26). If another DTC is indicated, go to the DTC troubleshooting index.

3. Turn the ignition switch OFF. Disconnect the battery negative cable, and wait for 3 minutes.

4. Disconnect the front passenger's airbag 4P connector (A) from the dashboard wire harness (B).

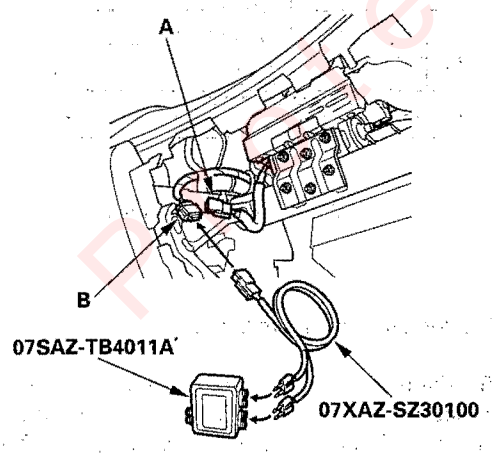

5. Connect the SRS inflator simulator (2 Ω connectors) and the simulator lead to the dashboard wire harness.

6. Reconnect the battery negative cable.

7. Erase the DTC memory.

8. Read the DTC (see page 23-24).

   Is DTC 12-9x or 12-Bx indicated?

   YES—Go to step 9.

   NO—Short to ground in the front passenger's airbag first or second inflator; replace the front passenger's airbag (see page 23-129). ■

9. Disconnect the battery negative cable, and wait for 3 minutes.

10. Disconnect SRS unit connector A (28P) from the SRS unit (see step 7 on page 23-23). Do not disconnect the SRS simulator lead F from the dashboard wire harness 4P connector.

11. Disconnect the SRS inflator simulator from SRS simulator lead F.

12. Check resistance between each terminal of SRS simulator lead F and body ground. There should be an open circuit, or at least 1 MΩ.

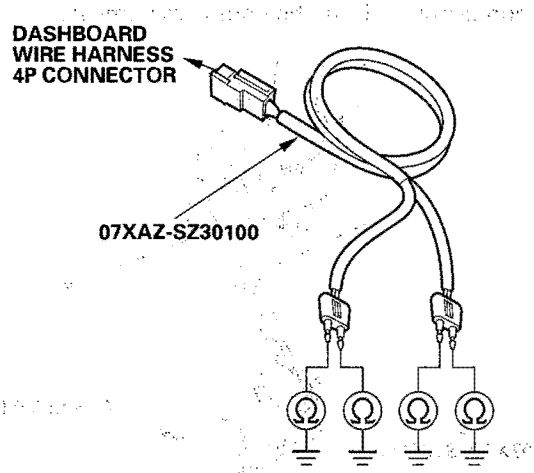

   Is the resistance as specified?

   YES—Faulty SRS unit; replace the SRS unit (see page 23-143). ■

   NO—Short to ground in the dashboard wire harness; replace the dashboard wire harness. ■

Protected by MARS

DTC Troubleshooting (cont'd)

DTC 21-1x (21-10 to 21-19, 21-1A to 21-1F): Open or Increased Resistance in Driver's Seat Belt Tensioner

Special Tools Required
- SRS inflator simulator 07SAZ-TB4011A
- SRS simulator lead F 07XAZ-SZ30100

1. Erase the DTC memory (see page 23-25).
2. Turn the ignition switch ON (II), and check that the SRS indicator comes on for about 6 seconds and then goes off.

   Does the SRS indicator stay on, and is DTC 21-1x indicated?

   YES—Go to step 3.

   NO—Intermittent failure, system is OK at this time. Go to Troubleshooting Intermittent Failures (see page 23-26). If another DTC is indicated, go to the DTC troubleshooting index.
3. Turn the ignition switch OFF. Disconnect the battery negative cable, and wait for 3 minutes.
4. Disconnect the driver's seat belt tensioner 4P connector (A) from the floor wire harness.

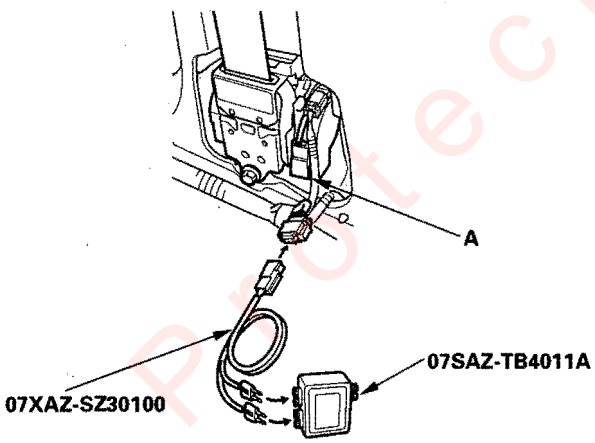

5. Connect the SRS inflator simulator (2 Ω connectors) and the simulator lead to the floor wire harness.
6. Reconnect the battery negative cable.
7. Erase the DTC memory.
8. Read the DTC (see page 23-24).

   Is DTC 21-1x indicated?

   YES—Go to step 9.

   NO—Open or increased resistance in the driver's seat belt tensioner; replace the driver's seat belt (see page 23-4).■
9. Turn the ignition switch OFF. Disconnect the battery negative cable, and wait for 3 minutes.
10. Disconnect the front passenger's seat belt tensioner 4P connector (see step 6 on page 23-23).
11. Disconnect SRS unit connector B (28P) from the SRS unit (see step 7 on page 23-23). Do not disconnect the SRS simulator lead or the simulator lead F from the floor wire harness 4P connector.
12. Check resistance between the No. 1 and the No. 2 terminals of SRS unit connector B (28P). There should be about 2.0—3.0 Ω.

SRS UNIT CONNECTOR B (28P)

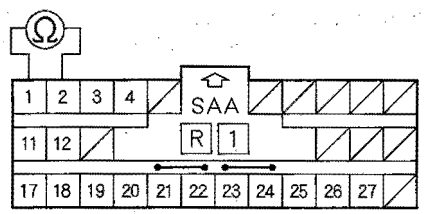

Wire side of female terminals

Is the resistance as specified?

YES—Faulty SRS unit or poor contact at SRS unit connector B (28P) and the SRS unit. Check the connection; If the connection is OK, replace the SRS unit (see page 23-143).■

NO—Open or increased resistance in the floor wire harness; replace the floor wire harness.■

Protected by AR

DTC 21-3x (21-30 to 21-39, 21-3A to 21-3F): Short to Another Wire or Decreased Resistance in Driver's Seat Belt Tensioner

Special Tools Required
- SRS inflator simulator 07SAZ-TB4011A
- SRS simulator lead F 07XAZ-SZ30100

1. Erase the DTC memory (see page 23-25).

2. Turn the ignition switch ON (II), and check that the SRS indicator comes on for about 6 seconds and then goes off.

   Does the SRS indicator stay on, and is DTC 21-3x indicated?

   YES—Go to step 3.

   NO—Intermittent failure, system is OK at this time. Go to Troubleshooting Intermittent Failures (see page 23-26). If another DTC is indicated, go to the DTC troubleshooting index.

3. Turn the ignition switch OFF. Disconnect the battery negative cable, and wait for 3 minutes.

4. Disconnect the driver's seat belt tensioner 4P connector (A) from the floor wire harness.

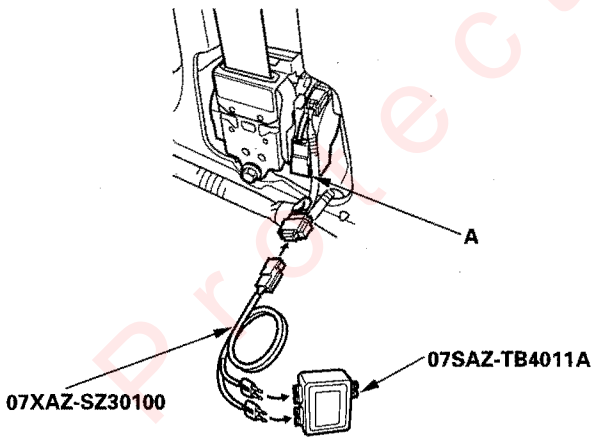

5. Connect the SRS inflator simulator (2 Ω connectors) and the simulator lead to the floor wire harness.

6. Reconnect the battery negative cable.

7. Erase the DTC memory.

8. Read the DTC (see page 23-24).

   Is DTC 21-3x indicated?

   YES—Go to step 9.

   NO—Short in the driver's seat belt tensioner; replace the driver's seat belt (see page 23-4). ■

9. Turn the ignition switch OFF. Disconnect the battery negative cable, and wait for 3 minutes.

10. Disconnect the front passenger's seat belt tensioner 4P connector (see step 6 on page 23-23).

11. Disconnect SRS unit connector B (28P) from the SRS unit (see step 7 on page 23-23).

12. Disconnect the simulator lead from the floor wire harness.

13. Check resistance between the No. 1 and the No. 2 terminals of SRS unit connector B (28P). There should be an open circuit, or at least 1 MΩ.

SRS UNIT CONNECTOR B (28P)

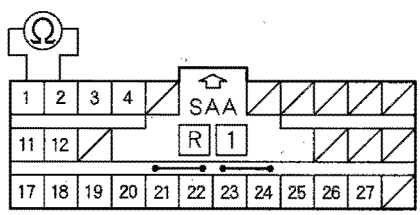

Wire side of female terminals

Is the resistance as specified?

YES—Faulty SRS unit; replace the SRS unit (see page 23-143). ■

NO—Short in the floor wire harness; replace the floor wire harness. ■

Protected by AAR

DTC Troubleshooting (cont'd)

DTC 21-8x (21-80 to 21-89, 21-8A to 21-8F): Short to Power in Driver's Seat Belt Tensioner

Special Tools Required
- SRS inflator simulator 07SAZ-TB4011A
- SRS simulator lead F 07XAZ-SZ30100

1. Erase the DTC memory (see page 23-25).
2. Turn the ignition switch ON (II), and check that the SRS indicator comes on for about 6 seconds and then goes off.

   Does the SRS indicator stay on, and is DTC 21-8x indicated?

   YES—Go to step 3.

   NO—Intermittent failure, system is OK at this time. Go to Troubleshooting Intermittent Failures (see page 23-26). If another DTC is indicated, go to the DTC troubleshooting index.
3. Turn the ignition switch OFF. Disconnect the battery negative cable, and wait for 3 minutes.
4. Disconnect the driver's seat belt tensioner 4P connector (A) from the floor wire harness.

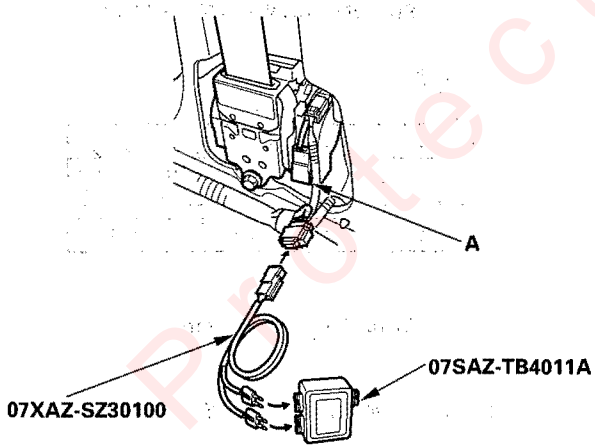

5. Connect the SRS inflator simulator (2 Ω connectors) and the simulator lead to the floor wire harness.
6. Reconnect the battery negative cable.
7. Erase the DTC memory.
8. Read the DTC (see page 23-24).

   Is DTC 21-8x indicated?

   YES—Go to step 9.

   NO—Short to power in the driver's seat belt tensioner; replace the driver's seat belt (see page 23-4).■
9. Turn the ignition switch OFF. Disconnect the battery negative cable, and wait for 3 minutes.
10. Disconnect the front passenger's seat belt tensioner 4P connector (see step 6 on page 23-23).
11. Disconnect SRS unit connector B (28P) from the SRS unit (see step 7 on page 23-23).
12. Disconnect the simulator lead from the floor wire harness.
13. Reconnect the battery negative cable.
14. Turn the ignition switch ON (II).
15. Check for voltage between the No. 1 terminal of SRS unit connector B (28P) and body ground, and between the No. 2 terminal and body ground. There should be 0.5 V or less.

SRS UNIT CONNECTOR B (28P)

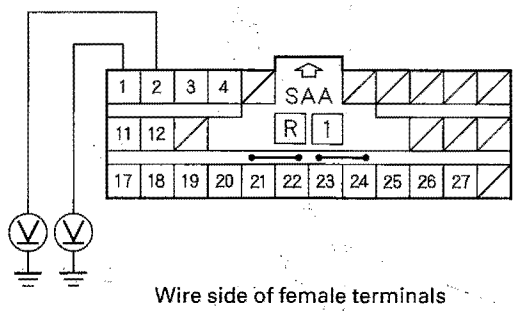

Wire side of female terminals

Is the voltage as specified?

YES—Faulty SRS unit; replace the SRS unit (see page 23-143).■

NO—Short to power in the floor wire harness; replace the floor wire harness.■

Protected by AR

DTC 21-9x (21-30 to 21-39, 21-3A to 21-3F): Short to Ground in Driver's Seat Belt Tensioner

Special Tools Required
- SRS inflator simulator 07SAZ-TB4011A
- SRS simulator lead F 07XAZ-SZ30100

1. Erase the DTC memory (see page 23-25).
2. Turn the ignition switch ON (II), and check that the SRS indicator comes on for about 6 seconds and then goes off.

   Does the SRS indicator stay on, and is DTC 21-9x indicated?

   YES—Go to step 3.

   NO—Intermittent failure, system is OK at this time. Go to Troubleshooting Intermittent Failures (see page 23-26). If another DTC is indicated, go to the DTC troubleshooting index.
3. Turn the ignition switch OFF. Disconnect the battery negative cable, and wait for 3 minutes.
4. Disconnect the driver's seat belt tensioner 4P connector (A) from the floor wire harness.

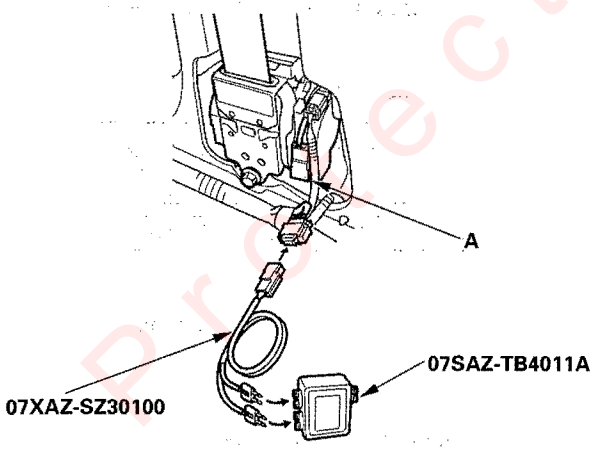

5. Connect the SRS inflator simulator (2 Ω connectors) and the simulator lead to the floor wire harness.
6. Reconnect the battery negative cable.
7. Erase the DTC memory.
8. Read the DTC (see page 23-24).

   Is DTC 21-9x indicated?

   YES—Go to step 9.

   NO—Short to ground in the driver's seat belt tensioner; replace the driver's seat belt (see page 23-4).■
9. Turn the ignition switch OFF. Disconnect the battery negative cable, and wait for 3 minutes.
10. Disconnect the front passenger's seat belt tensioner 4P connector (see step 6 on page 23-23).
11. Disconnect SRS unit connector B (28P) from the SRS unit (see step 7 on page 23-23).
12. Disconnect the simulator lead from the floor wire harness.
13. Check resistance between the No. 1 terminal of SRS unit connector B (28P) and body ground, and between the No. 2 terminal and body ground. There should be an open circuit, or at least 1 MΩ.

SRS UNIT CONNECTOR B (28P)

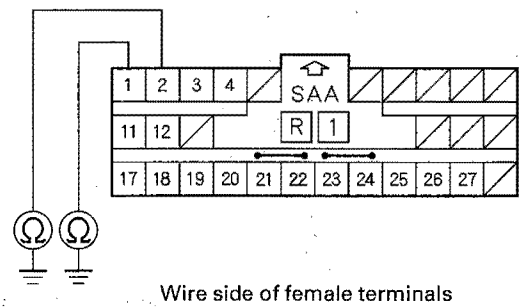

Wire side of female terminals

Is the resistance as specified?

YES—Faulty SRS unit; replace the SRS unit (see page 23-143).■

NO—Short to ground in the floor wire harness; replace the floor wire harness.■

Protected by AR

DTC Troubleshooting (cont'd)

DTC 22-1x (22-10 to 22-19, 22-1A to 22-1F): Open or Increased Resistance in Front Passenger's Seat Belt Tensioner

Special Tools Required
- SRS inflator simulator 07SAZ-TB4011A
- SRS simulator lead F 07XAZ-SZ30100

1. Erase the DTC memory (see page 23-25).
2. Turn the ignition switch ON (II), and check that the SRS indicator comes on for about 6 seconds and then goes off.

   Does the SRS indicator stay on, and is DTC 22-1x indicated?

   YES—Go to step 3.

   NO—Intermittent failure, system is OK at this time. Go to Troubleshooting Intermittent Failures (see page 23-26). If another DTC is indicated, go to the DTC troubleshooting index.
3. Turn the ignition switch OFF. Disconnect the battery negative cable, and wait for 3 minutes.
4. Disconnect the front passenger's seat belt tensioner 4P connector (A) from the floor wire harness.

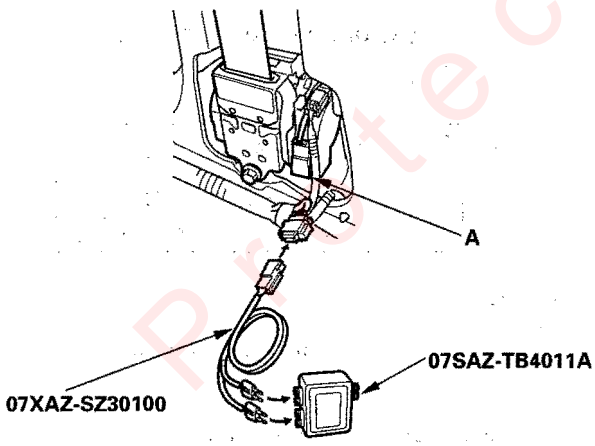

5. Connect the SRS inflator simulator (2 Ω connectors) and the simulator lead to the floor wire harness.
6. Reconnect the battery negative cable.
7. Erase the DTC memory.
8. Read the DTC (see page 23-24).

   Is DTC 22-1x indicated?

   YES—Go to step 9.

   NO—Open or increased resistance in the front passenger's seat belt tensioner; replace the front passenger's seat belt (see page 23-4).■
9. Turn the ignition switch OFF. Disconnect the battery negative cable, and wait for 3 minutes.
10. Disconnect the driver's seat belt tensioner 4P connector (see step 6 on page 23-23).
11. Disconnect SRS unit connector B (28P) from the SRS unit (see step 7 on page 23-23). Do not disconnect the SRS simulator lead or the simulator lead F from the floor wire harness 4P connector.
12. Check resistance between the No. 3 and the No. 4 terminals of SRS unit connector B (28P). There should be about 2.0—3.0 Ω.

SRS UNIT CONNECTOR B (28P)

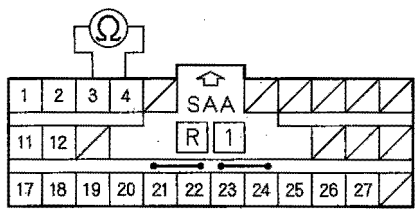

Wire side of female terminals

Is the resistance as specified?

YES—Faulty SRS unit or poor contact at SRS unit connector B (28P) and the SRS unit. Check the connection; If the connection is OK, replace the SRS unit (see page 23-143).■

NO—Open or increased resistance in the floor wire harness; replace the floor wire harness.■

Protected by AR

DTC 22-3x (22-30 to 22-39, 22-3A to 22-3F): Short to Another Wire or Decreased Resistance in Front Passenger's Seat Belt Tensioner

Special Tools Required
- SRS inflator simulator 07SAZ-TB4011A
- SRS simulator lead F 07XAZ-SZ30100

1. Erase the DTC memory (see page 23-25).
2. Turn the ignition switch ON (II), and check that the SRS indicator comes on for about 6 seconds and then goes off.

   Does the SRS indicator stay on, and is DTC 22-3x indicated?

   YES—Go to step 3.

   NO—Intermittent failure, system is OK at this time. Go to Troubleshooting Intermittent Failures (see page 23-26). If another DTC is indicated, go to the DTC troubleshooting index.
3. Turn the ignition switch OFF. Disconnect the battery negative cable, and wait for 3 minutes.
4. Disconnect the front passenger's seat belt tensioner 4P connector (A) from the floor wire harness.

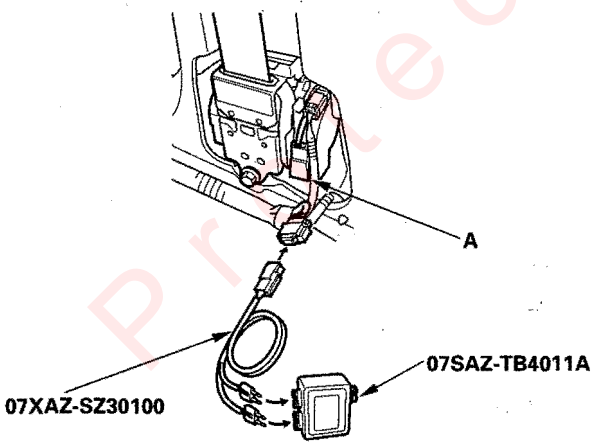

5. Connect the SRS inflator simulator (2 Ω connectors) and the simulator lead to the floor wire harness.
6. Reconnect the battery negative cable.
7. Erase the DTC memory.
8. Read the DTC (see page 23-24).

   Is DTC 22-3x indicated?

   YES—Go to step 9.

   NO—Short in the front passenger's seat belt tensioner; replace the front passenger's seat belt (see page 23-4). ■
9. Turn the ignition switch OFF. Disconnect the battery negative cable, and wait for 3 minutes.
10. Disconnect the driver's seat belt tensioner 4P connector (see step 6 on page 23-23).
11. Disconnect SRS unit connector B (28P) from the SRS unit (see step 7 on page 23-23).
12. Disconnect the simulator lead from the floor wire harness.
13. Check resistance between the No. 3 and the No. 4 terminals of SRS unit connector B (28P). There should be an open circuit, or at least 1 MΩ.

SRS UNIT CONNECTOR B (28P)

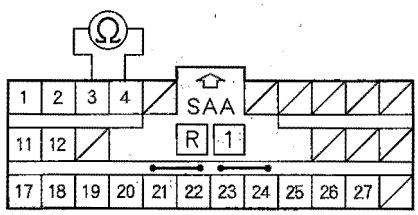

Wire side of female terminals

Is the resistance as specified?

YES—Faulty SRS unit; replace the SRS unit (see page 23-143). ■

NO—Short in the floor wire harness; replace the floor wire harness. ■

Protected by A R

DTC Troubleshooting (cont'd)

DTC 22-8x (22-80 to 22-89, 22-8A to 22-8F): Short to Power in Front Passenger's Seat Belt Tensioner

Special Tools Required
- SRS inflator simulator 07SAZ-TB4011A
- SRS simulator lead F 07XAZ-SZ30100

1. Erase the DTC memory (see page 23-25).
2. Turn the ignition switch ON (II), and check that the SRS indicator comes on for about 6 seconds and then goes off.

   Does the SRS indicator stay on, and is DTC 22-8x indicated?

   YES—Go to step 3.

   NO—Intermittent failure, system is OK at this time. Go to Troubleshooting Intermittent Failures (see page 23-26). If another DTC is indicated, go to the DTC troubleshooting index.
3. Turn the ignition switch OFF. Disconnect the battery negative cable, and wait for 3 minutes.
4. Disconnect the front passenger's seat belt tensioner 4P connector (A) from the floor wire harness.

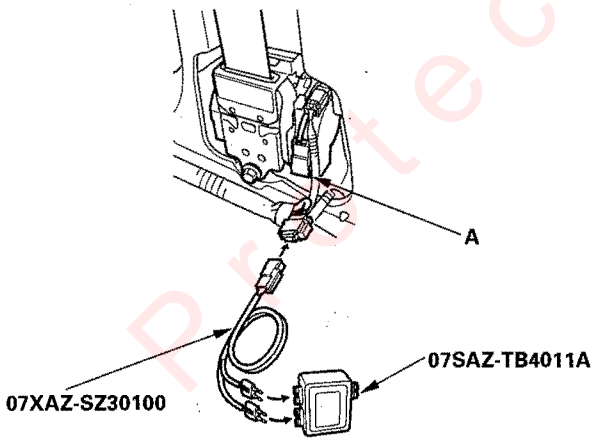

5. Connect the SRS inflator simulator (2 Ω connectors) and the simulator lead to the floor wire harness.
6. Reconnect the battery negative cable.
7. Erase the DTC memory.
8. Read the DTC (see page 23-24).

   Is DTC 22-8x indicated?

   YES—Go to step 9.

   NO—Short to power in the front passenger's seat belt tensioner; replace the front passenger's seat belt (see page 23-4).■
9. Turn the ignition switch OFF. Disconnect the battery negative cable, and wait for 3 minutes.
10. Disconnect the driver's seat belt tensioner 4P connector (see step 6 on page 23-23).
11. Disconnect SRS unit connector B (28P) from the SRS unit (see step 7 on page 23-23).
12. Disconnect the simulator lead from the floor wire harness.
13. Reconnect the battery negative cable.
14. Turn the ignition switch ON (II).
15. Check for voltage between the No. 3 terminal of SRS unit connector B (28P) and body ground, and between the No. 4 terminal and body ground. There should be 0.5 V or less.

SRS UNIT CONNECTOR B (28P)

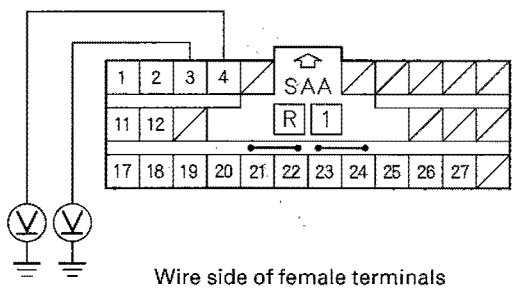

Wire side of female terminals

Is the voltage as specified?

YES—Faulty SRS unit; replace the SRS unit (see page 23-143).■

NO—Short to power in the floor wire harness; replace the floor wire harness.■

Protected by AR

DTC 22-9x (22-30 to 22-39, 22-3A to 22-3F): Short to Ground in Front Passenger's Seat Belt Tensioner

Special Tools Required
- SRS inflator simulator 07SAZ-TB4011A
- SRS simulator lead F 07XAZ-SZ30100

1. Erase the DTC memory (see page 23-25).

2. Turn the ignition switch ON (II), and check that the SRS indicator comes on for about 6 seconds and then goes off.

   Does the SRS indicator stay on, and is DTC 22-9x indicated?

   YES — Go to step 3.

   NO — Intermittent failure, system is OK at this time. Go to Troubleshooting Intermittent Failures (see page 23-26). If another DTC is indicated, go to the DTC troubleshooting index.

3. Turn the ignition switch OFF. Disconnect the battery negative cable, and wait for 3 minutes.

4. Disconnect the front passenger's seat belt tensioner 4P connector (A) from the floor wire harness.

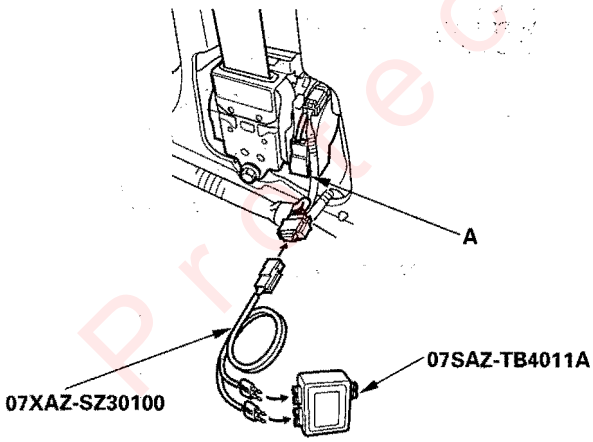

5. Connect the SRS inflator simulator (2 Ω connectors) and the simulator lead to the floor wire harness.

6. Reconnect the battery negative cable.

7. Erase the DTC memory.

8. Read the DTC (see page 23-24).

   Is DTC 22-9x indicated?

   YES — Go to step 9.

   NO — Short to ground in the front passenger's seat belt tensioner; replace the front passenger's seat belt (see page 23-4). ■

9. Turn the ignition switch OFF. Disconnect the battery negative cable, and wait for 3 minutes.

10. Disconnect the driver's seat belt tensioner 4P connector (see step 6 on page 23-23).

11. Disconnect SRS unit connector B (28P) from the SRS unit (see step 7 on page 23-23).

12. Disconnect the simulator lead from the floor wire harness.

13. Check resistance between the No. 3 terminal of SRS unit connector B (28P) and body ground, and between the No. 4 terminal and body ground. There should be an open circuit, or at least 1 MΩ.

SRS UNIT CONNECTOR B (28P)

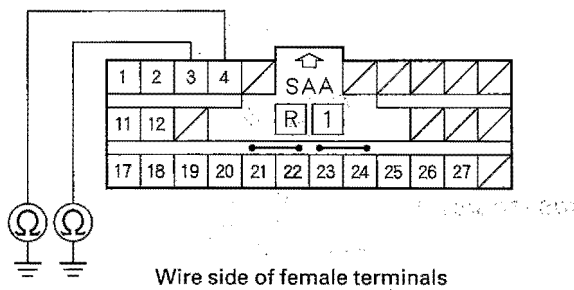

Wire side of female terminals

Is the resistance as specified?

YES — Faulty SRS unit; replace the SRS unit (see page 23-143). ■

NO — Short to ground in the floor wire harness; replace the floor wire harness. ■

Protected by AR

DTC Troubleshooting (cont'd)

DTC 31-1x (31-10 to 31-19, 31-1A to 31-1F): Open or Increased Resistance in Driver's Side Airbag Inflator

Special Tools Required
- SRS inflator simulator 07SAZ-TB4011A
- SRS simulator lead E 07XAZ-S1A0200

1. Erase the DTC memory (see page 23-25).
2. Turn the ignition switch ON (II), and check that the SRS indicator comes on for about 6 seconds and then goes off.

   Does the SRS indicator stay on, and is DTC 31-1x indicated?

   YES—Go to step 3.

   NO—Intermittent failure, system is OK at this time. Go to Troubleshooting Intermittent Failures (see page 23-26). If another DTC is indicated, go to the DTC troubleshooting index.
3. Turn the ignition switch OFF. Disconnect the battery negative cable, and wait for 3 minutes.
4. Disconnect the floor wire harness 2P connector (A) from the driver's side airbag.

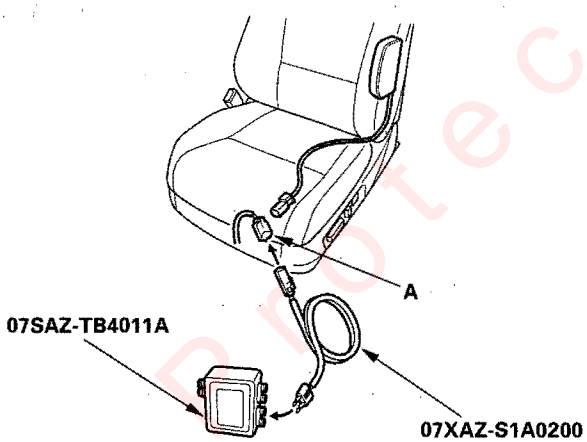

5. Connect the SRS inflator simulator (2 Ω connector) and the simulator lead to the floor wire harness.
6. Reconnect the battery negative cable.
7. Erase the DTC memory.
8. Read the DTC (see page 23-24).

   Is DTC 31-1x indicated?

   YES—Go to step 9.

   NO—Open or increased resistance in the driver's side airbag inflator; replace the driver's side airbag (see page 23-131).■
9. Turn the ignition switch OFF. Disconnect the battery negative cable, and wait for 3 minutes.
10. Disconnect both seat belt tensioner 4P connectors (see step 6 on page 23-23).
11. Disconnect SRS unit connector B (28P) from the SRS unit (see step 7 on page 23-23). Do not disconnect the SRS simulator lead E from the floor wire harness 2P connector.
12. Disconnect the SRS inflator simulator from SRS simulator lead E.
13. Check resistance between the terminals of SRS simulator lead E. There should be 1.0 Ω or less.

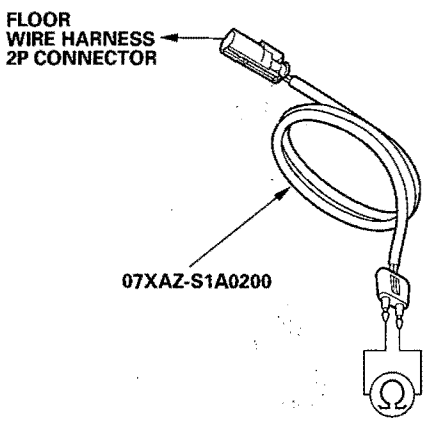

Is the resistance as specified?

YES—Faulty SRS unit or poor contact at SRS unit connector B (28P) and the SRS unit. Check the connection; if the connection is OK, replace the SRS unit (see page 23-143).■

NO—Open or increased resistance in the floor wire harness; replace the floor wire harness.■

Protected by AR

DTC 31-3x (31-30 to 31-39, 31-3A to 31-3F): Short to Another Wire or Decreased Resistance in Driver's Side Airbag Inflator

Special Tools Required
- SRS inflator simulator 07SAZ-TB4011A
- SRS simulator lead E 07XAZ-S1A0200
- SRS short canceller 070AZ-SAA0100

1. Erase the DTC memory (see page 23-25).

2. Turn the ignition switch ON (II), and check that the SRS indicator comes on for about 6 seconds and then goes off.

   Does the SRS indicator stay on, and is DTC 31-3x indicated?

   YES—Go to step 3.

   NO—Intermittent failure, system is OK at this time. Go to Troubleshooting Intermittent Failures (see page 23-26). If another DTC is indicated, go to the DTC troubleshooting index.

3. Turn the ignition switch OFF. Disconnect the battery negative cable, and wait for 3 minutes.

4. Disconnect the floor wire harness 2P connector (A) from the driver's side airbag.

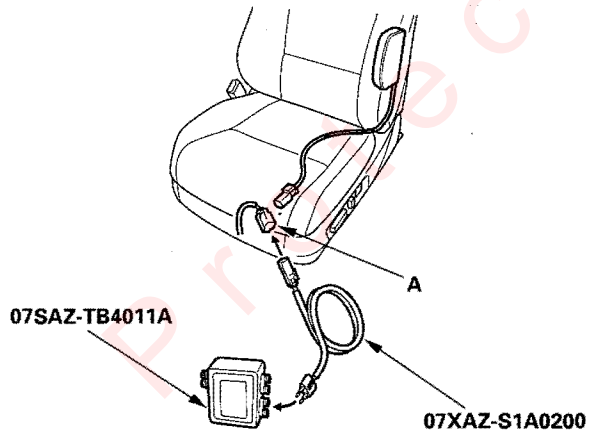

5. Connect the SRS inflator simulator (2 Ω connector) and the simulator lead to the floor wire harness.

6. Reconnect the battery negative cable.

7. Erase the DTC memory.

8. Read the DTC (see page 23-24).

   Is DTC 31-3x indicated?

   YES—Go to step 9.

   NO—Short in the driver's side airbag inflator; replace the driver's side airbag (see page 23-131).■

9. Turn the ignition switch OFF. Disconnect the battery negative cable, and wait for 3 minutes.

10. Disconnect both seat belt tensioner 4P connectors (see step 6 on page 23-23).

11. Disconnect SRS unit connector B (28P) from the SRS unit (see step 7 on page 23-23). Do not disconnect the SRS simulator lead E from the floor wire harness 2P connector.

12. Disconnect the SRS inflator simulator from SRS simulator lead E.

13. Connect the SRS short canceller (070AZ-SAA0100) to the No. 21 and No. 22 terminals of SRS unit connector B (28P) (see page 23-19).

14. Check resistance between the terminals of SRS simulator lead E. There should be an open circuit, or at least 1 MΩ.

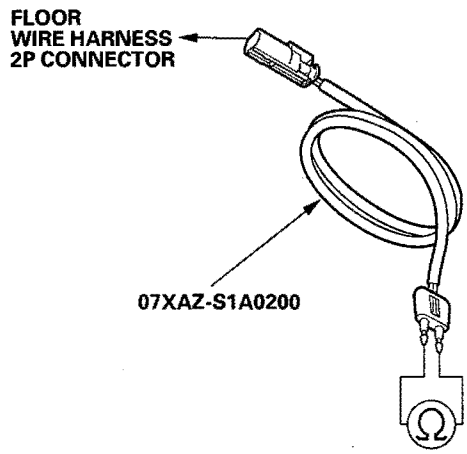

   Is the resistance as specified?

   YES—Faulty SRS unit; replace the SRS unit (see page 23-143).■

   NO—Short in the floor wire harness; replace the floor wire harness.■

Protected by CARFAX

DTC Troubleshooting (cont'd)

DTC 31-8x (31-80 to 31-89, 31-8A to 31-8F): Short to Power in Driver's Side Airbag Inflator

Special Tools Required
- SRS inflator simulator 07SAZ-TB4011A
- SRS simulator lead E 07XAZ-S1A0200

1. Erase the DTC memory (see page 23-25).
2. Turn the ignition switch ON (II), and check that the SRS indicator comes on for about 6 seconds and then goes off.

   Does the SRS indicator stay on, and is DTC 31-8x indicated?

   YES—Go to step 3.

   NO—Intermittent failure, system is OK at this time. Go to Troubleshooting Intermittent Failures (see page 23-26). If another DTC is indicated, go to the DTC troubleshooting index.
3. Turn the ignition switch OFF. Disconnect the battery negative cable, and wait for 3 minutes.
4. Disconnect the floor wire harness 2P connector (A) from the driver's side airbag.

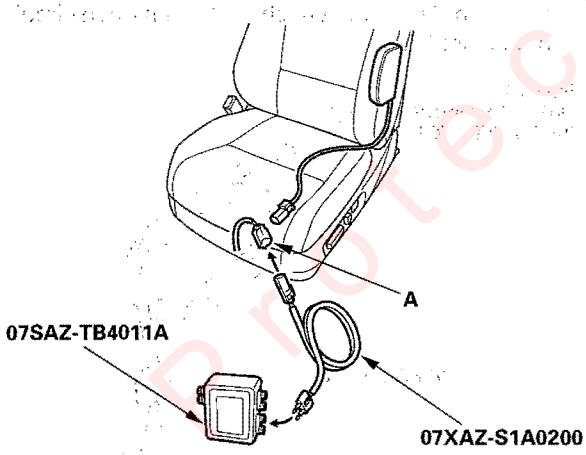

5. Connect the SRS inflator simulator (2 Ω connector) and the simulator lead to the floor wire harness.
6. Reconnect the battery negative cable.
7. Erase the DTC memory.
8. Read the DTC (see page 23-24).

   Is DTC 31-8x indicated?

   YES—Go to step 9.

   NO—Short to power in the driver's side airbag inflator; replace the driver's side airbag (see page 23-131). ■
9. Turn the ignition switch OFF. Disconnect the battery negative cable, and wait for 3 minutes.
10. Disconnect both seat belt tensioner 4P connectors (see step 6 on page 23-23).
11. Disconnect SRS unit connector B (28P) from the SRS unit (see step 7 on page 23-23). Do not disconnect the SRS simulator lead E from the floor wire harness 2P connector.
12. Disconnect the SRS inflator simulator from SRS simulator lead E.
13. Reconnect the battery negative cable.
14. Turn the ignition switch ON (II).
15. Check for voltage between each terminal of SRS simulator lead E and body ground. There should be 0.5 V or less.

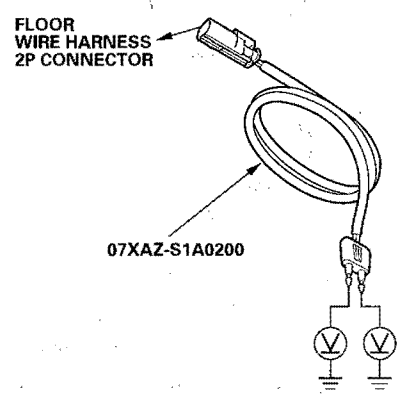

Is the voltage as specified?

YES—Faulty SRS unit; replace the SRS unit (see page 23-143). ■

NO—Short to power in the floor wire harness; replace the floor wire harness. ■

Protected by A P

DTC 31-9x (31-90 to 31-99, 31-9A to 31-9F): Short to Ground in Driver's Side Airbag Inflator

Special Tools Required
- SRS inflator simulator 07SAZ-TB4011A
- SRS simulator lead E 07XAZ-S1A0200

1. Erase the DTC memory (see page 23-25).
2. Turn the ignition switch ON (II), and check that the SRS indicator comes on for about 6 seconds and then goes off.

   Does the SRS indicator stay on, and is DTC 31-9x indicated?

   YES—Go to step 3.

   NO—Intermittent failure, system is OK at this time. Go to Troubleshooting Intermittent Failures (see page 23-26). If another DTC is indicated, go to the DTC troubleshooting index.
3. Turn the ignition switch OFF. Disconnect the battery negative cable, and wait for 3 minutes.
4. Disconnect the floor wire harness 2P connector (A) from the driver's side airbag.

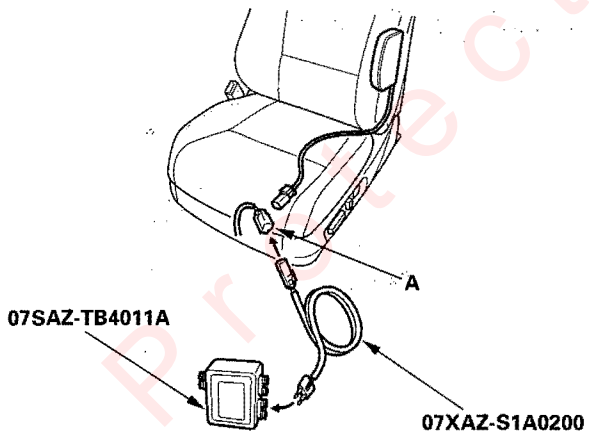

5. Connect the SRS inflator simulator (2 Ω connector) and the simulator lead to the floor wire harness.
6. Reconnect the battery negative cable.
7. Erase the DTC memory.
8. Read the DTC (see page 23-24).

   Is DTC 31-9x indicated?

   YES—Go to step 9.

   NO—Short to ground in the driver's side airbag inflator; replace the driver's side airbag (see page 23-131).■
9. Turn the ignition switch OFF. Disconnect the battery negative cable, and wait for 3 minutes.
10. Disconnect both seat belt tensioner 4P connectors (see step 6 on page 23-23).
11. Disconnect SRS unit connector B (28P) from the SRS unit (see step 7 on page 23-23). Do not disconnect the SRS simulator lead E from the floor wire harness 2P connector.
12. Disconnect the SRS inflator simulator from SRS simulator lead E.
13. Check resistance between each terminal of SRS simulator lead E and body ground. There should be an open circuit, or at least 1 MΩ.

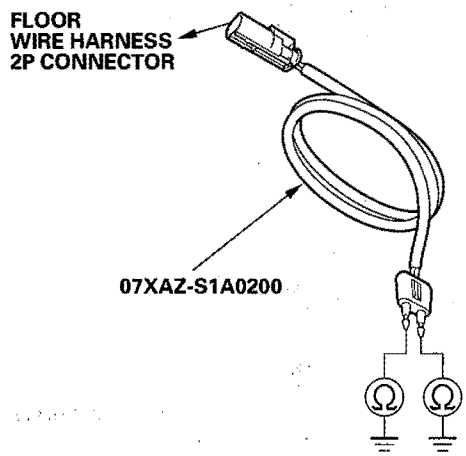

Is the resistance as specified?

YES—Faulty SRS unit; replace the SRS unit (see page 23-143).■

NO—Short to ground in the floor wire harness; replace the floor wire harness.■

Protected by AR

DTC Troubleshooting (cont'd)

DTC 32-1x (32-10 to 32-19, 32-1A to 32-1F): Open or Increased Resistance in Front Passenger's Side Airbag Inflator

Special Tools Required
- SRS inflator simulator 07SAZ-TB4011A
- SRS simulator lead E 07XAZ-S1A0200

1. Erase the DTC memory (see page 23-25).
2. Turn the ignition switch ON (II), and check that the SRS indicator comes on for about 6 seconds and then goes off.

   Does the SRS indicator stay on, and is DTC 32-1x indicated?

   YES—Go to step 3.

   NO—Intermittent failure, system is OK at this time. Go to Troubleshooting Intermittent Failures (see page 23-26). If another DTC is indicated, go to the DTC troubleshooting index.
3. Turn the ignition switch OFF. Disconnect the battery negative cable, and wait for 3 minutes.
4. Disconnect the floor wire harness 2P connector (A) from the front passenger's side airbag.

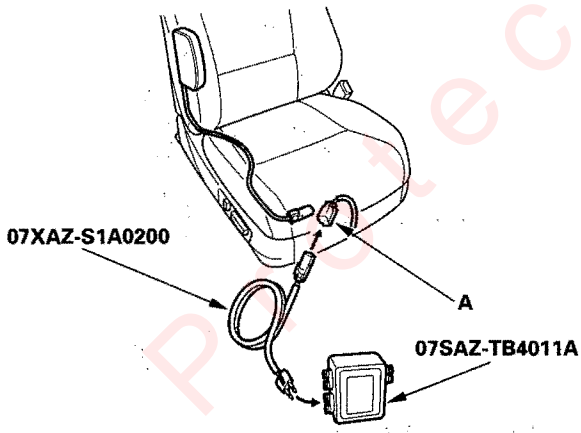

5. Connect the SRS inflator simulator (2 Ω connector) and the simulator lead to the floor wire harness.
6. Reconnect the battery negative cable.
7. Erase the DTC memory.
8. Read the DTC (see page 23-24).

   Is DTC 32-1x indicated?

   YES—Go to step 9.

   NO—Open or increased resistance in the front passenger's side airbag inflator; replace the front passenger's side airbag (see page 23-131).■
9. Turn the ignition switch OFF. Disconnect the battery negative cable, and wait for 3 minutes.
10. Disconnect both seat belt tensioner 4P connectors (see step 6 on page 23-23).
11. Disconnect SRS unit connector B (28P) from the SRS unit (see step 7 on page 23-23). Do not disconnect the SRS simulator lead E from the floor wire harness 2P connector.
12. Disconnect the SRS inflator simulator from SRS simulator lead E.
13. Check resistance between the terminals of SRS simulator lead E. There should be 1.0 Ω or less.

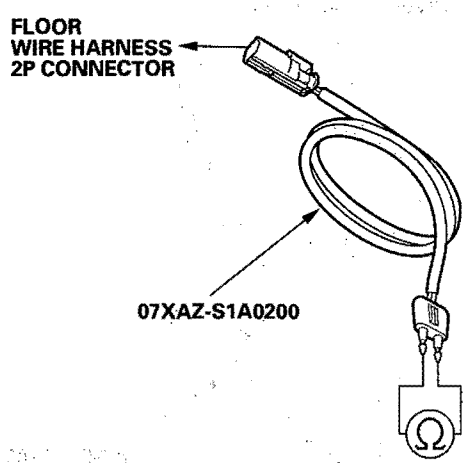

Is the resistance as specified?

YES—Faulty SRS unit or poor contact at SRS unit connector B (28P) and the SRS unit. Check the connection; if the connection is OK, replace the SRS unit (see page 23-143).■

NO—Open or increased resistance in the floor wire harness; replace the floor wire harness.■

Protected by AIM

DTC 32-3x (32-30 to 32-39, 32-3A to 32-3F): Short to Another Wire or Decreased Resistance in Front Passenger's Side Airbag Inflator

Special Tools Required
- SRS inflator simulator 07SAZ-TB4011A
- SRS simulator lead E 07XAZ-S1A0200
- SRS short canceller 070AZ-SAA0100

1. Erase the DTC memory (see page 23-25).

2. Turn the ignition switch ON (II), and check that the SRS indicator comes on for about 6 seconds and then goes off.

   Does the SRS indicator stay on, and is DTC 32-3x indicated?

   YES—Go to step 3.

   NO—Intermittent failure, system is OK at this time. Go to Troubleshooting Intermittent Failures (see page 23-26). If another DTC is indicated, go to the DTC troubleshooting index.

3. Turn the ignition switch OFF. Disconnect the battery negative cable, and wait for 3 minutes.

4. Disconnect the floor wire harness 2P connector (A) from the front passenger's side airbag.

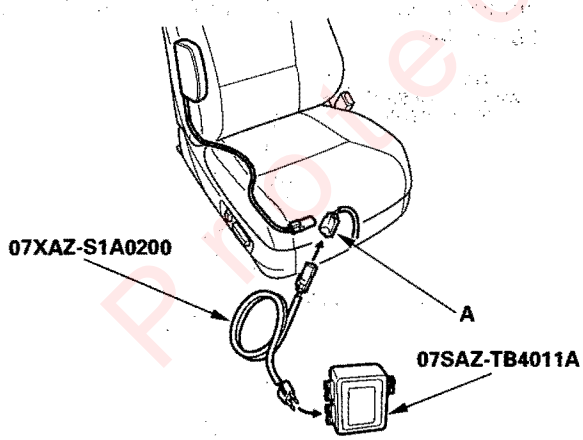

5. Connect the SRS inflator simulator (2 Ω connector) and the simulator lead to the floor wire harness.

6. Reconnect the battery negative cable.

7. Erase the DTC memory.

8. Read the DTC (see page 23-24).

   Is DTC 32-3x indicated?

   YES—Go to step 9.

   NO—Short in the front passenger's side airbag inflator; replace the front passenger's side airbag (see page 23-131).■

9. Turn the ignition switch OFF. Disconnect the battery negative cable, and wait for 3 minutes.

10. Disconnect both seat belt tensioner 4P connectors (see step 6 on page 23-23).

11. Disconnect SRS unit connector B (28P) from the SRS unit (see step 7 on page 23-23). Do not disconnect the SRS simulator lead E from the floor wire harness 2P connector.

12. Disconnect the SRS inflator simulator from SRS simulator lead E.

13. Connect the SRS short canceller (070AZ-SAA0100) to the No. 23 and No. 24 terminals of SRS unit connector B (28P) (see page 23-19).

14. Check resistance between the terminals of SRS simulator lead E. There should be an open circuit, or at least 1 MΩ.

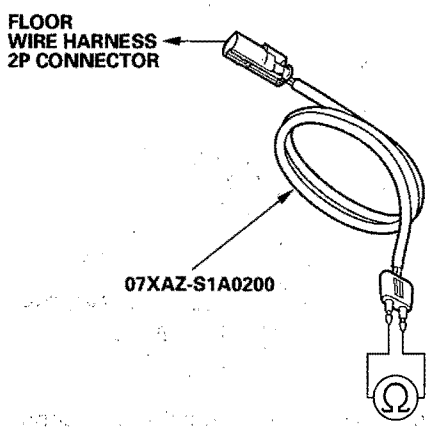

   Is the resistance as specified?

   YES—Faulty SRS unit; replace the SRS unit (see page 23-143).■

   NO—Short in the floor wire harness; replace the floor wire harness.■

Protected by AR

DTC Troubleshooting (cont'd)

DTC 32-8x (32-80 to 32-89, 32-8A to 32-8F): Short to Power in Front Passenger's Side Airbag Inflator

Special Tools Required
- SRS inflator simulator 07SAZ-TB4011A
- SRS simulator lead E 07XAZ-S1A0200

1. Erase the DTC memory (see page 23-25).
2. Turn the ignition switch ON (II), and check that the SRS indicator comes on for about 6 seconds and then goes off.

   Does the SRS indicator stay on, and is DTC 32-8x indicated?

   YES—Go to step 3.

   NO—Intermittent failure, system is OK at this time. Go to Troubleshooting Intermittent Failures (see page 23-26). If another DTC is indicated, go to the DTC troubleshooting index.
3. Turn the ignition switch OFF. Disconnect the battery negative cable, and wait for 3 minutes.
4. Disconnect the floor wire harness 2P connector (A) from the front passenger's side airbag.

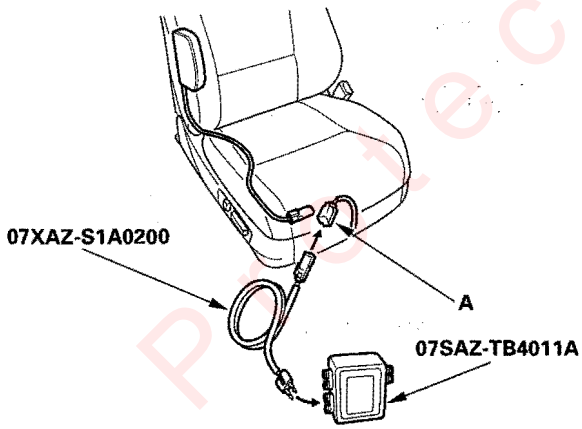

5. Connect the SRS inflator simulator (2 Ω connector) and the simulator lead to the floor wire harness.
6. Reconnect the battery negative cable.
7. Erase the DTC memory.
8. Read the DTC (see page 23-24).

   Is DTC 32-8x indicated?

   YES—Go to step 9.

   NO—Short to power in the front passenger's side airbag inflator; replace the front passenger's side airbag (see page 23-131).■
9. Turn the ignition switch OFF. Disconnect the battery negative cable, and wait for 3 minutes.
10. Disconnect both seat belt tensioner 4P connectors (see step 6 on page 23-23).
11. Disconnect SRS unit connector B (28P) from the SRS unit (see step 7 on page 23-23). Do not disconnect the SRS simulator lead E from the floor wire harness 2P connector.
12. Disconnect the SRS inflator simulator from SRS simulator lead E.
13. Reconnect the battery negative cable.
14. Turn the ignition switch ON (II).
15. Check for voltage between each terminal of SRS simulator lead E and body ground. There should be 0.5 V or less.

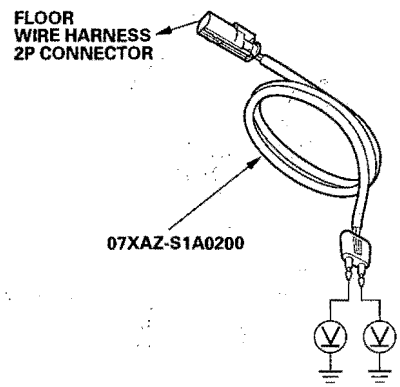

Is the voltage as specified?

YES—Faulty SRS unit; replace the SRS unit (see page 23-143).■

NO—Short to power in the floor wire harness; replace the floor wire harness.■

Projected by AP

DTC 32-9x (32-90 to 32-99, 32-9A to 32-9F): Short to Ground in Front Passenger's Side Airbag Inflator

Special Tools Required
- SRS inflator simulator 07SAZ-TB4011A
- SRS simulator lead E 07XAZ-S1A0200

1. Erase the DTC memory (see page 23-25).
2. Turn the ignition switch ON (II), and check that the SRS indicator comes on for about 6 seconds and then goes off.

   Does the SRS indicator stay on, and is DTC 32-9x indicated?

   YES—Go to step 3.

   NO—Intermittent failure, system is OK at this time. Go to Troubleshooting Intermittent Failures (see page 23-26). If another DTC is indicated, go to the DTC troubleshooting index.
3. Turn the ignition switch OFF. Disconnect the battery negative cable, and wait for 3 minutes.
4. Disconnect the floor wire harness 2P connector (A) from the front passenger's side airbag.

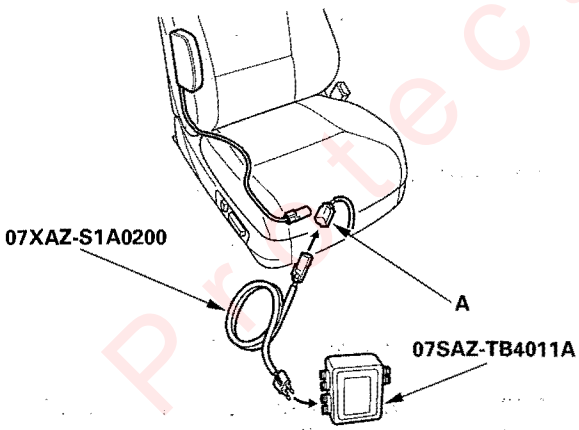

5. Connect the SRS inflator simulator (2 Ω connector) and the simulator lead to the floor wire harness.
6. Reconnect the battery negative cable.
7. Erase the DTC memory.
8. Read the DTC (see page 23-24).

   Is DTC 32-9x indicated?

   YES—Go to step 9.

   NO—Short to ground in the front passenger's side airbag inflator; replace the front passenger's side airbag (see page 23-131). ■
9. Turn the ignition switch OFF. Disconnect the battery negative cable, and wait for 3 minutes.
10. Disconnect both seat belt tensioner 4P connectors (see step 6 on page 23-23).
11. Disconnect SRS unit connector B (28P) from the SRS unit (see step 7 on page 23-23). Do not disconnect the SRS simulator lead E from the floor wire harness 2P connector.
12. Disconnect the SRS inflator simulator from SRS simulator lead E.
13. Check resistance between each terminal of SRS simulator lead E and body ground. There should be an open circuit, or at least 1 MΩ.

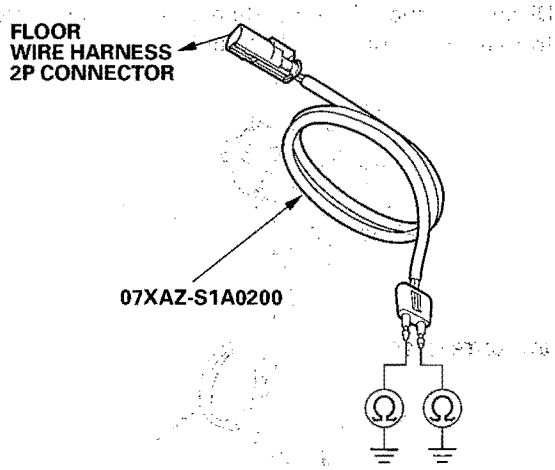

Is the resistance as specified?

YES—Faulty SRS unit; replace the SRS unit (see page 23-143). ■

NO—Short to ground in the floor wire harness; replace the floor wire harness. ■

Protected by AR

DTC Troubleshooting (cont'd)

DTC 33-1x (33-10 to 33-19, 33-1A to 33-1F): Open or Increased Resistance in Left Side Curtain Airbag Inflator

Special Tools Required
- SRS inflator simulator 07SAZ-TB4011A
- SRS simulator lead E 07XAZ-S1A0200

1. Erase the DTC memory (see page 23-25).
2. Turn the ignition switch ON (II), and check that the SRS indicator comes on for about 6 seconds and then goes off.

   Does the SRS indicator stay on, and is DTC 33-1x indicated?

   YES – Go to step 3.

   NO – Intermittent failure, system is OK at this time. Go to Troubleshooting Intermittent Failures (see page 23-26). If another DTC is indicated, go to the DTC troubleshooting index.
3. Turn the ignition switch OFF. Disconnect the battery negative cable, and wait for 3 minutes.
4. Disconnect the left side curtain airbag 2P connector from the side curtain airbag subharness (A).

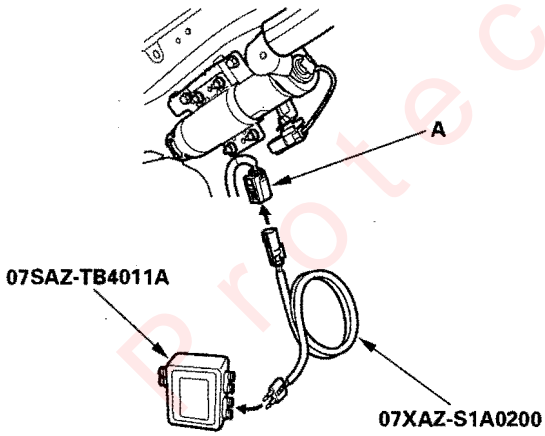

5. Connect the SRS inflator simulator (2 Ω connector) and the simulator lead to the side curtain airbag subharness.
6. Reconnect the battery negative cable.
7. Erase the DTC memory.
8. Read the DTC (see page 23-24).

   Is DTC 33-1x indicated?

   YES – Go to step 9.

   NO – Open or increased resistance in the left side curtain airbag; replace the left side curtain airbag (see page 23-132). ■
9. Turn the ignition switch OFF. Disconnect the battery negative cable, and wait for 3 minutes.
10. Disconnect SRS unit connector C (16P) from the SRS unit (see step 7 on page 23-23). Do not disconnect the SRS simulator lead E from the side curtain airbag subharness.
11. Disconnect the SRS inflator simulator from SRS simulator lead E.
12. Check resistance between the terminals of SRS simulator lead E. There should be 1.0 Ω or less.

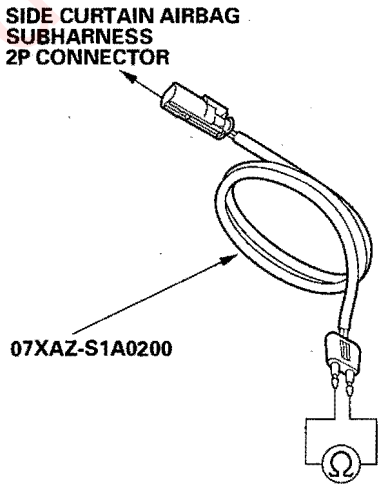

Is the resistance as specified?

YES – Faulty SRS unit or poor contact at the SRS unit connector C (16P) and the SRS unit. Check the connection; if the connection is OK, replace the SRS unit (see page 23-143). ■

NO – Open or increased resistance in the side curtain airbag subharness; replace the side curtain airbag subharness. ■

Protected by AR

DTC 33-3x (33-30 to 33-39, 33-3A to 33-3F): Short to Another Wire or Decreased Resistance in Left Side Curtain Airbag Inflator

Special Tools Required
- SRS inflator simulator 07SAZ-TB4011A
- SRS simulator lead E 07XAZ-S1A0200
- SRS short canceller 070AZ-SAA0100

1. Erase the DTC memory (see page 23-25).
2. Turn the ignition switch ON (II), and check that the SRS indicator comes on for about 6 seconds and then goes off.

   Does the SRS indicator stay on, and is DTC 33-3x indicated?

   YES—Go to step 3.

   NO—Intermittent failure, system is OK at this time. Go to Troubleshooting Intermittent Failures (see page 23-26). If another DTC is indicated, go to the DTC troubleshooting index.
3. Turn the ignition switch OFF. Disconnect the battery negative cable, and wait for 3 minutes.
4. Disconnect the left side curtain airbag 2P connector from the side curtain airbag subharness (A).

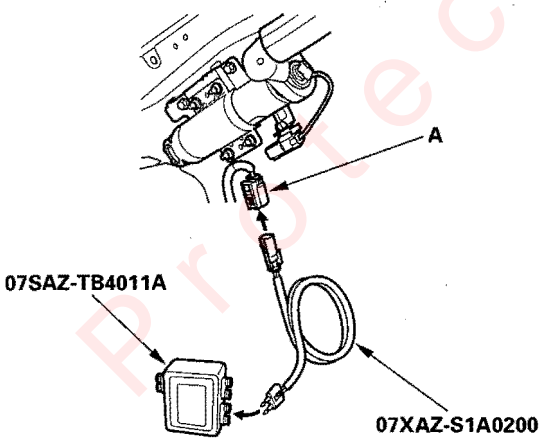

5. Connect the SRS inflator simulator (2 Ω connector) and the simulator lead to the side curtain airbag subharness.
6. Reconnect the battery negative cable.
7. Erase the DTC memory.
8. Read the DTC (see page 23-24).

   Is DTC 33-3x indicated?

   YES—Go to step 9.

   NO—Short in the left side curtain airbag inflator; replace the left side curtain airbag (see page 23-132).■
9. Turn the ignition switch OFF. Disconnect the battery negative cable, and wait for 3 minutes.
10. Disconnect SRS unit connector C (16P) from the SRS unit (see step 7 on page 23-23). Do not disconnect the SRS simulator lead E from the side curtain airbag subharness.
11. Disconnect the SRS inflator simulator from SRS simulator lead E.
12. Connect the SRS short canceller (070AZ-SAA0100) to the No. 11 and No. 12 terminals of SRS unit connector C (16P) (see page 23-19).
13. Check resistance between the terminals of SRS simulator lead E. There should be an open circuit, or at least 1 MΩ.

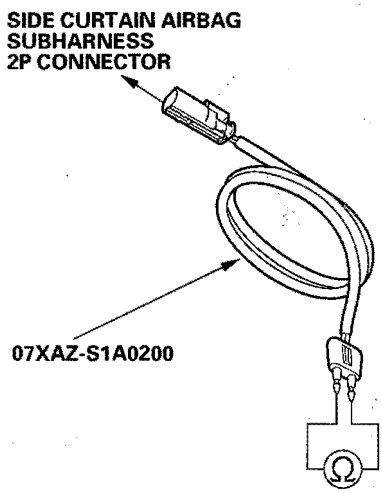

   Is the resistance as specified?

   YES—Faulty SRS unit; replace the SRS unit (see page 23-143).■

   NO—Short in the side curtain airbag subharness; replace the side curtain airbag subharness.■

Protected by AR

DTC Troubleshooting (cont'd)

DTC 33-8x (33-80 to 33-89, 33-8A to 33-8F): Short to Power in Left Side Curtain Airbag Inflator

Special Tools Required
- SRS inflator simulator 07SAZ-TB4011A
- SRS simulator lead E 07XAZ-S1A0200

1. Erase the DTC memory (see page 23-25).
2. Turn the ignition switch ON (II), and check that the SRS indicator comes on for about 6 seconds and then goes off.

   Does the SRS indicator stay on, and is DTC 33-8x indicated?

   YES—Go to step 3.

   NO—Intermittent failure, system is OK at this time. Go to Troubleshooting Intermittent Failures (see page 23-26). If another DTC is indicated, go to the DTC troubleshooting index.
3. Turn the ignition switch OFF. Disconnect the battery negative cable, and wait for 3 minutes.
4. Disconnect the left side curtain airbag 2P connector from the side curtain airbag subharness (A).

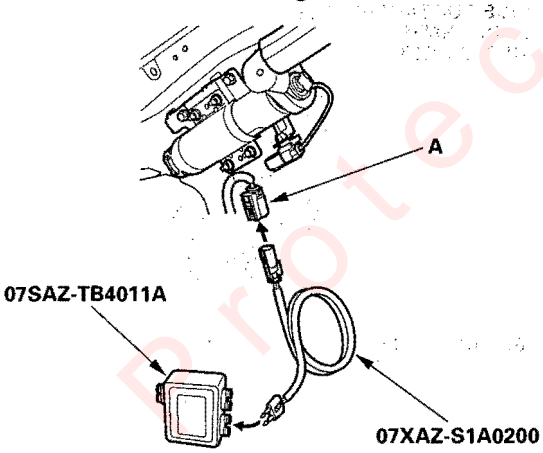

5. Connect the SRS inflator simulator (2 Ω connector) and the simulator lead to side curtain airbag subharness.
6. Reconnect the battery negative cable.
7. Erase the DTC memory.
8. Read the DTC (see page 23-24).

   Is DTC 33-8x indicated?

   YES—Go to step 9.

   NO—Short to power in the left side curtain airbag inflator; replace the left side curtain airbag (see page 23-132).■
9. Turn the ignition switch OFF. Disconnect the battery negative cable, and wait for 3 minutes.
10. Disconnect the SRS unit connector C (16P) from the SRS unit (see step 7 on page 23-23). Do not disconnect the SRS simulator lead E from the side curtain airbag subharness.
11. Reconnect the battery negative cable.
12. Turn the ignition switch ON (II).
13. Disconnect the SRS inflator simulator from SRS simulator lead E.
14. Check for voltage between each terminal of SRS simulator lead E and body ground. There should be 0.5 V or less.

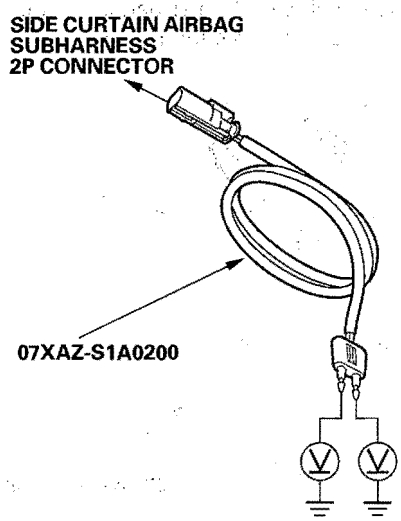

Is the voltage as specified?

YES—Faulty SRS unit; replace the SRS unit (see page 23-143).■

NO—Short to power in the side curtain airbag subharness; replace the side curtain airbag subharness.■

Protected by AR

DTC 33-9x (33-90 to 33-99, 33-9A to 33-9F): Short to Ground in Left Side Curtain Airbag Inflator

Special Tools Required
- SRS inflator simulator 07SAZ-TB4011A
- SRS simulator lead E 07XAZ-S1A0200

1. Erase the DTC memory (see page 23-25).

2. Turn the ignition switch ON (II), and check that the SRS indicator comes on for about 6 seconds and then goes off.

   Does the SRS indicator stay on, and is DTC 33-9x indicated?

   YES—Go to step 3.

   NO—Intermittent failure, system is OK at this time. Go to Troubleshooting Intermittent Failures (see page 23-26). If another DTC is indicated, go to the DTC troubleshooting index.

3. Turn the ignition switch OFF. Disconnect the battery negative cable, and wait for 3 minutes.

4. Disconnect the left side curtain airbag 2P connector from the side curtain airbag subharness (A).

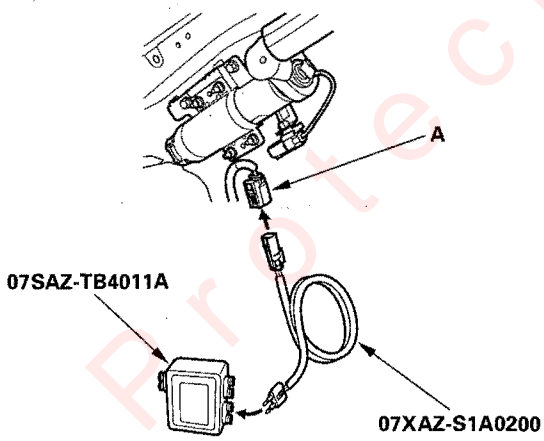

5. Connect the SRS inflator simulator (2 Ω connector) and the simulator lead to the side curtain airbag subharness.

6. Reconnect the battery negative cable.

7. Erase the DTC memory.

8. Read the DTC (see page 23-24).

   Is DTC 33-9x indicated?

   YES—Go to step 9.

   NO—Short to ground in the left side curtain airbag inflator; replace the left side curtain airbag (see page 23-132).■

9. Turn the ignition switch OFF. Disconnect the battery negative cable, and wait for 3 minutes.

10. Disconnect SRS unit connector C (16P) from the SRS unit (see step 7 on page 23-23). Do not disconnect the SRS simulator lead E from the side curtain airbag subharness.

11. Disconnect the SRS inflator simulator from SRS simulator lead E.

12. Check resistance between each terminal of SRS simulator lead E and body ground. There should be an open circuit, or at least 1 MΩ.

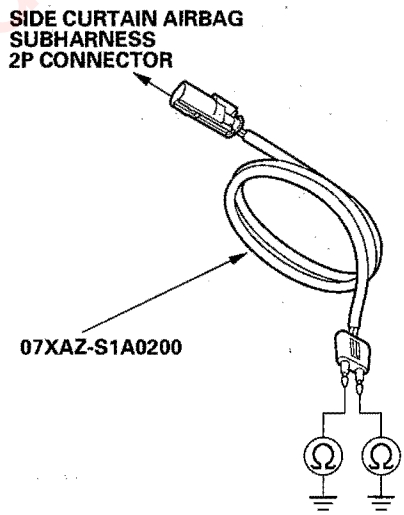

Is the resistance as specified?

YES—Faulty SRS unit; replace the SRS unit (see page 23-143).■

NO—Short to ground in the side curtain airbag subharness; replace the side curtain airbag subharness.■

Protected by AR

DTC Troubleshooting (cont'd)

DTC 34-1x (34-10 to 34-19, 34-1A to 34-1F): Open or Increased Resistance in Right Side Curtain Airbag Inflator

Special Tools Required
- SRS inflator simulator 07SAZ-TB4011A
- SRS simulator lead E 07XAZ-S1A0200

1. Erase the DTC memory (see page 23-25).
2. Turn the ignition switch ON (II), and check that the SRS indicator comes on for about 6 seconds and then goes off.

   Does the SRS indicator stay on, and is DTC 34-1x indicated?

   YES – Go to step 3.

   NO – Intermittent failure, system is OK at this time. Go to Troubleshooting Intermittent Failures (see page 23-26). If another DTC is indicated, go to the DTC troubleshooting index.
3. Turn the ignition switch OFF. Disconnect the battery negative cable, and wait for 3 minutes.
4. Disconnect the right side curtain airbag 2P connector from the side curtain airbag subharness (A).

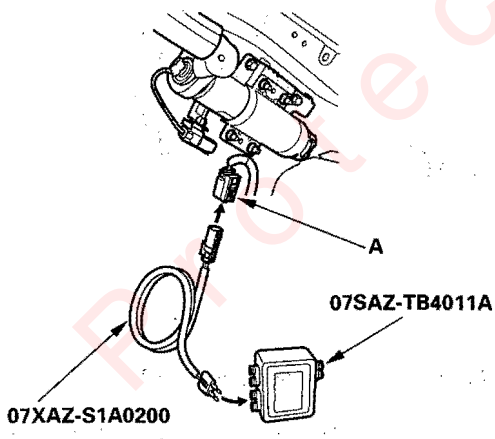

5. Connect the SRS inflator simulator (2 Ω connector) and the simulator lead to the side curtain airbag subharness.
6. Reconnect the battery negative cable.
7. Erase the DTC memory.
8. Read the DTC (see page 23-24).

   Is DTC 34-1x indicated?

   YES – Go to step 9.

   NO – Open or increased resistance in the right side curtain airbag inflator, replace the right side curtain airbag (see page 23-132).■
9. Turn the ignition switch OFF. Disconnect the battery negative cable, and wait for 3 minutes.
10. Disconnect SRS unit connector C (16P) from the SRS unit (see step 7 on page 23-23). Do not disconnect the simulator lead E from the side curtain airbag subharness.
11. Disconnect the SRS inflator simulator from SRS simulator lead E.
12. Check resistance between the terminals of SRS simulator lead E. There should be 1.0 Ω or less.

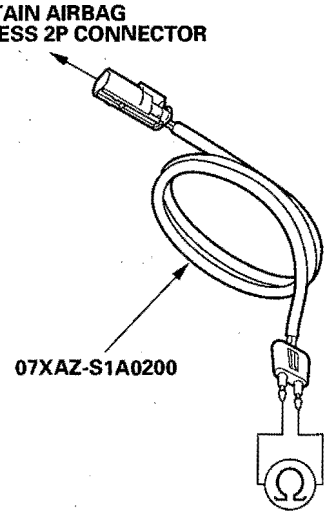

Is the resistance as specified?

YES – Faulty SRS unit or poor contact at SRS unit connector C (16P) and the SRS unit. Check the connection; if the connection is OK, replace the SRS unit (see page 23-143).■

NO – Open or increased resistance in the side curtain airbag subharness; replace the side curtain airbag subharness.■

Protected by AR

DTC 34-3x (34-30 to 34-39, 34-3A to 34-3F): Short to Another Wire or Decreased Resistance in Right Side Curtain Airbag Inflator

Special Tools Required
- SRS inflator simulator 07SAZ-TB4011A
- SRS simulator lead E 07XAZ-S1A0200
- SRS short canceller 070AZ-SAA0100

1. Erase the DTC memory (see page 23-25).
2. Turn the ignition switch ON (II), and check that the SRS indicator comes on for about 6 seconds and then goes off.

   Does the SRS indicator stay on, and is DTC 34-3x indicated?

   YES – Go to step 3.

   NO – Intermittent failure, system is OK at this time. Go to Troubleshooting Intermittent Failures (see page 23-26). If another DTC is indicated, go to the DTC troubleshooting index.
3. Turn the ignition switch OFF. Disconnect the battery negative cable, and wait for 3 minutes.
4. Disconnect the right side curtain airbag 2P connector from the side curtain airbag subharness (A).

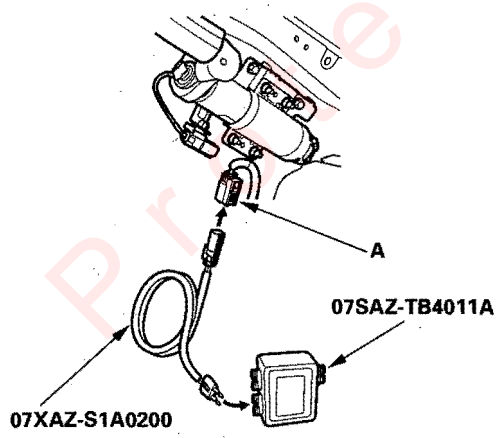

5. Connect the SRS inflator simulator (2 Ω connector) and the simulator lead to the side curtain airbag subharness.
6. Reconnect the battery negative cable.
7. Erase the DTC memory.
8. Read the DTC (see page 23-24).

   Is DTC 34-3x indicated?

   YES – Go to step 9.

   NO – Short in the right side curtain airbag inflator; replace the right side curtain airbag (see page 23-132). ■
9. Turn the ignition switch OFF. Disconnect the battery negative cable, and wait for 3 minutes.
10. Disconnect SRS unit connector C (16P) from the SRS unit (see step 7 on page 23-23). Do not disconnect the SRS simulator lead E from the side curtain airbag subharness.
11. Disconnect the SRS inflator simulator from SRS simulator lead E.
12. Connect the SRS short canceller (070AZ-SAA0100) to the No. 13 and No. 14 terminals of SRS unit connector C (16P) (see page 23-19).
13. Check resistance between the terminals of SRS simulator lead E. There should be an open circuit, or at least 1 MΩ.

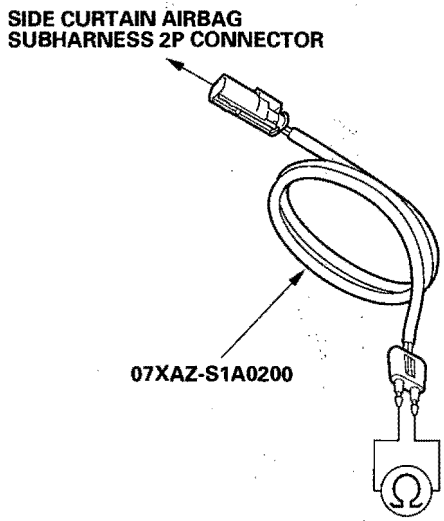

Is the resistance as specified?

YES – Faulty SRS unit; replace the SRS unit (see page 23-143). ■

NO – Short in the side curtain airbag subharness; replace the side curtain airbag subharness. ■

Protected by AR

DTC Troubleshooting (cont'd)

DTC 34-8x (34-80 to 34-89, 34-8A to 34-8F): Short to Power in Right Side Curtain Airbag Inflator

Special Tools Required
- SRS inflator simulator 07SAZ-TB4011A
- SRS simulator lead E 07XAZ-S1A0200

1. Erase the DTC memory (see page 23-25).
2. Turn the ignition switch ON (II), and check that the SRS indicator comes on for about 6 seconds and then goes off.

   Does the SRS indicator stay on, and is DTC 34-8x indicated?

   YES—Go to step 3.

   NO—Intermittent failure, system is OK at this time. Go to Troubleshooting Intermittent Failures (see page 23-26). If another DTC is indicated, go to the DTC troubleshooting index.
3. Turn the ignition switch OFF. Disconnect the battery negative cable, and wait for 3 minutes.
4. Disconnect the right side curtain airbag 2P connector from the side curtain airbag subharness (A).

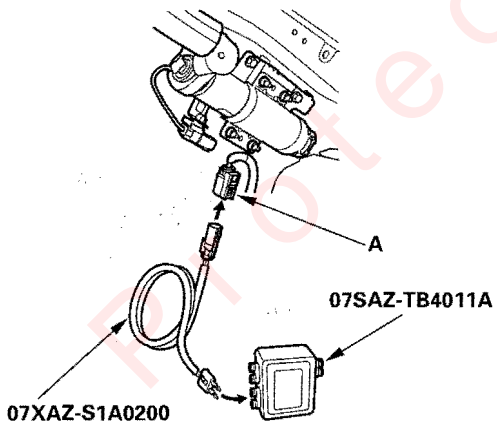

5. Connect the SRS inflator simulator (2 Ω connector) and the simulator lead to the side curtain airbag subharness.
6. Reconnect the battery negative cable.
7. Erase the DTC memory.
8. Read the DTC (see page 23-24).

   Is DTC 34-8x indicated?

   YES—Go to step 9.

   NO—Short to power in the right side curtain airbag inflator; replace the right side curtain airbag (see page 23-132).■
9. Turn the ignition switch OFF. Disconnect the battery negative cable, and wait for 3 minutes.
10. Disconnect SRS unit connector C (16P) from the SRS unit (see step 7 on page 23-23). Do not disconnect the SRS simulator lead E from the side curtain airbag subharness.
11. Reconnect the battery negative cable.
12. Turn the ignition switch ON (II).
13. Disconnect the SRS inflator simulator from SRS simulator lead E.
14. Check for voltage between each terminal of SRS simulator lead E and body ground. There should be 0.5 V or less.

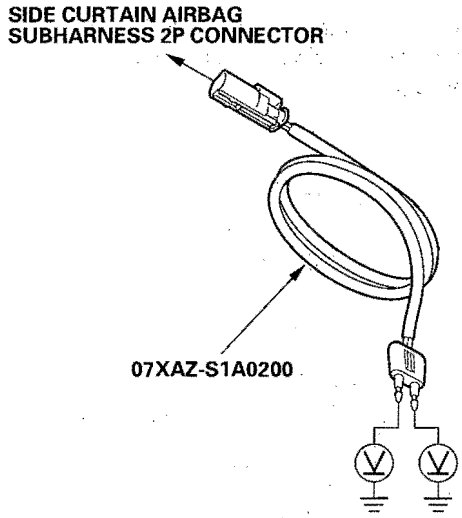

Is the voltage as specified?

YES—Faulty SRS unit; replace the SRS unit (see page 23-143).■

NO—Short to power in the side curtain airbag subharness; replace the side curtain airbag subharness.■

Protected by AR

DTC 34-9x (34-90 to 34-99, 34-9A to 34-9F): Short to Ground in Right Side Curtain Airbag Inflator

Special Tools Required
- SRS inflator simulator 07SAZ-TB4011A
- SRS simulator lead E 07XAZ-S1A0200

1. Erase the DTC memory (see page 23-25).
2. Turn the ignition switch ON (II), and check that the SRS indicator comes on for about 6 seconds and then goes off.

   Does the SRS indicator stay on, and is DTC 34-9x indicated?

   YES—Go to step 3.

   NO—Intermittent failure, system is OK at this time. Go to Troubleshooting Intermittent Failures (see page 23-26). If another DTC is indicated, go to the DTC troubleshooting index.
3. Turn the ignition switch OFF. Disconnect the battery negative cable, and wait for 3 minutes.
4. Disconnect the right side curtain airbag 2P connector from the side curtain airbag subharness (A).

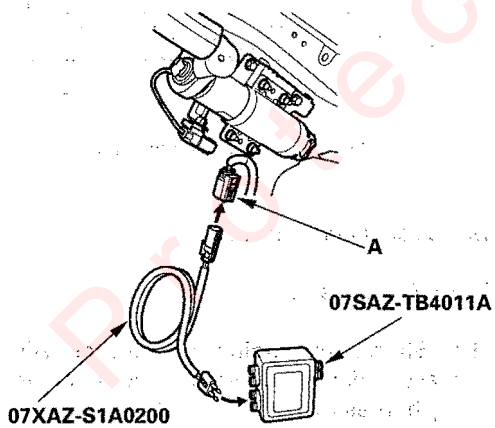

5. Connect the SRS inflator simulator (2 Ω connector) and the simulator lead to the side curtain airbag subharness.
6. Reconnect the battery negative cable.
7. Erase the DTC memory.
8. Read the DTC (see page 23-24).

   Is DTC 34-9x indicated?

   YES—Go to step 9.

   NO—Short to ground in the right side curtain airbag inflator; replace the right side curtain airbag (see page 23-132).■
9. Turn the ignition switch OFF. Disconnect the battery negative cable, and wait for 3 minutes.
10. Disconnect SRS unit connector C (16P) from the SRS unit (see step 7 on page 23-23). Do not disconnect the SRS simulator lead E from the side curtain airbag subharness.
11. Disconnect the SRS inflator simulator from SRS simulator lead E.
12. Check resistance between each terminal of SRS simulator lead E and body ground. There should be an open circuit, or at least 1 MΩ.

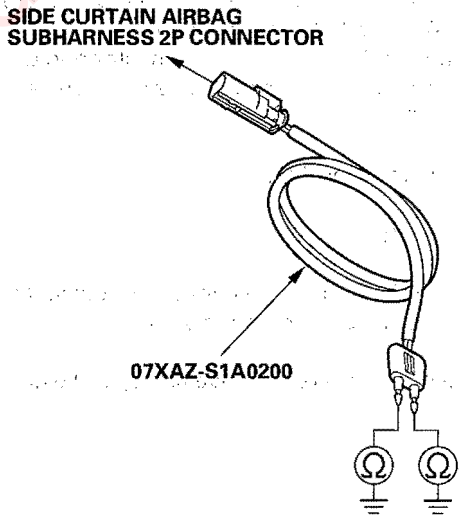

Is the resistance as specified?

YES—Faulty SRS unit; replace the SRS unit (see page 23-143).■

NO—Short to ground in the side curtain airbag subharness; replace the side curtain airbag subharness.■

Projected by AR

DTC Troubleshooting (cont'd)

DTC 41-1x (41-10 to 41-19, 41-1A to 41-1F): No signal from the Left Front Impact Sensor

Special Tools Required
- SRS inflator simulator 07SAZ-TB4011A
- SRS simulator lead H 07YAZ-S3AA100

1. Erase the DTC memory (see page 23-25).

2. Turn the ignition switch ON (II), and check that the SRS indicator comes on for about 6 seconds and then goes off.

   Does the SRS indicator stay on, and is DTC 41-1x indicated?

   YES – Go to step 3.

   NO – Intermittent failure, system is OK at this time. Go to Troubleshooting Intermittent Failures (see page 23-26). If another DTC is indicated, go to the DTC troubleshooting index.

3. Turn the ignition switch OFF. Check the connections between SRS unit connector A (28P) and the SRS unit, between the engine compartment wire harness 2P connector and the left front impact sensor (see page 23-11), and at connector C304.

   Are the connections OK?

   YES – Go to step 4.

   NO – Repair the poor connections and retest. If the DTC 41-1x is still present, go to step 4.

4. Disconnect the battery negative cable, and wait for 3 minutes.

5. Disconnect the engine compartment wire harness 2P connector (A) from the left front impact sensor.

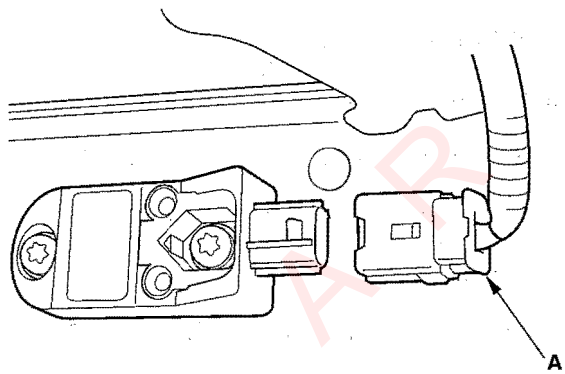

6. Disconnect SRS unit connector A (28P) from the SRS unit (see step 7 on page 23-23).

7. Check resistance between the No. 15 and No. 27 terminals of SRS unit connector A (28P). There should be an open circuit, or at least 1 MΩ.

SRS UNIT CONNECTOR A (28P)

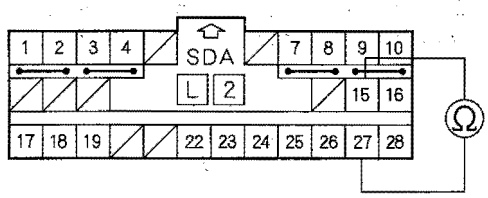

Wire side of female terminals

Is the resistance as specified?

YES – Go to step 8.

NO – Short in the engine compartment wire harness or dashboard wire harness; replace the faulty harness. ■

Protected by ARS

8. Check resistance between the No. 15 terminal of SRS unit connector A (28P) and body ground, and between the No. 27 terminal and body ground. There should be an open circuit, or at least 1 MΩ.

SRS UNIT CONNECTOR A (28P)

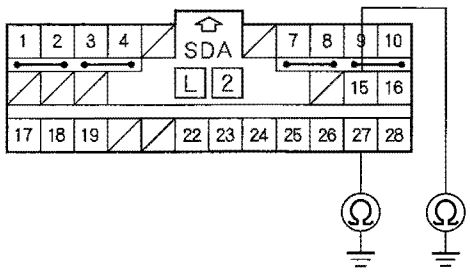

Wire side of female terminals

Is the resistance as specified?

YES – Go to step 9.

NO – Short to ground in the engine compartment wire harness or the dashboard wire harness; replace the faulty harness.■

9. Reconnect the battery negative cable.

10. Turn the ignition switch ON (II).

11. Check for voltage between the No. 27 terminal of SRS unit connector A (28P) and body ground, and between the No. 15 terminal and body ground. There should be 1 V or less.

SRS UNIT CONNECTOR A (28P)

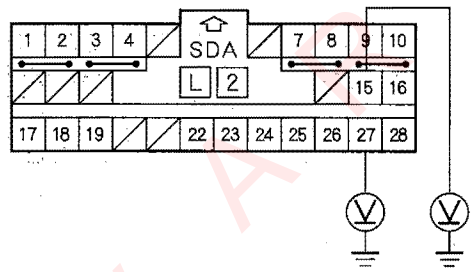

Wire side of female terminals

Is the voltage as specified?

YES – Go to step 12.

NO – Short to power in the engine compartment wire harness or the dashboard wire harness; replace the faulty harness.■

12. Turn the ignition switch OFF.

13. Connect the SRS inflator simulator (jumper connector) and the simulator lead to the engine compartment wire harness 2P connector (A).

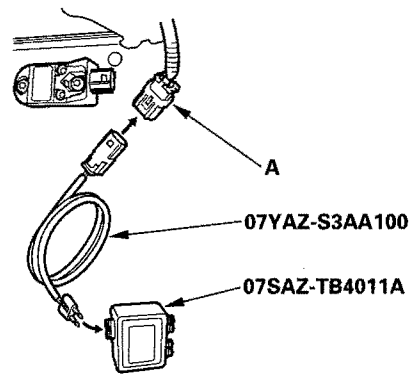

(cont'd)

Protected by AP

DTC Troubleshooting (cont'd)

14. Check resistance between the No. 15 and No. 27 terminals of SRS unit connector A (28P). There should be 1.0 Ω or less.

SRS UNIT CONNECTOR A (28P)

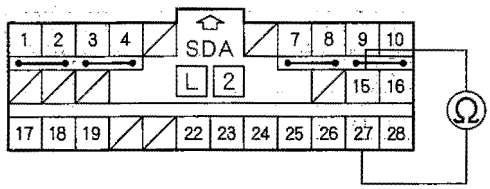

Wire side of female terminals

Is the resistance as specified?

YES—Faulty left front impact sensor or SRS unit; replace the left front impact sensor (see page 23-147). If the problem is still present, replace the SRS unit (see page 23-143).■

NO—Poor connection at C304, faulty engine compartment wire harness, or faulty dashboard wire harness. Inspect C304. If it is OK, replace the faulty harness.■

Protected by A R

DTC 42-1x (42-10 to 42-19, 42-1A to 42-1F): No Signal from the Right Front Impact Sensor

Special Tools Required
- SRS inflator simulator 07SAZ-TB4011A
- SRS simulator lead H 07YAZ-S3AA100

1. Erase the DTC memory (see page 23-25).

2. Turn the ignition switch ON (II), and check that the SRS indicator comes on for about 6 seconds and then goes off.

   Does the SRS indicator stay on, and is DTC 42-1x indicated?

   YES—Go to step 3.

   NO—Intermittent failure, system is OK at this time. Go to Troubleshooting Intermittent Failures (see page 23-26). If another DTC is indicated, go to the DTC troubleshooting index.

3. Turn the ignition switch OFF. Check the connections between SRS unit connector A (28P) and the SRS unit, between the engine compartment wire harness 2P connector and the right front impact sensor (see page 23-11), and at connector C304.

   Are the connections OK?

   YES—Go to step 4.

   NO—Repair the poor connections and retest. If the DTC 42-1x is still present, go to step 4.

4. Disconnect the battery negative cable, and wait for 3 minutes.

5. Disconnect the engine compartment wire harness 2P connector (A) from the right front impact sensor.

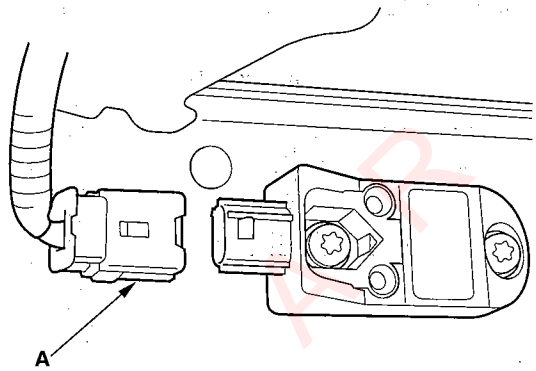

6. Disconnect SRS unit connector A (28P) from the SRS unit (see step 7 on page 23-23).

7. Check resistance between the No. 16 and No. 28 terminals of SRS unit connector A (28P). There should be an open circuit, or at least 1 MΩ.

SRS UNIT CONNECTOR A (28P)

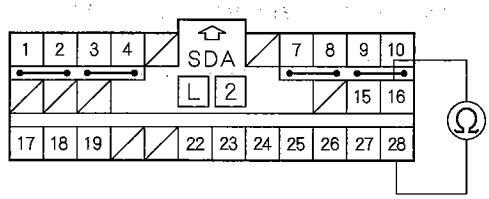

Wire side of female terminals

Is the resistance as specified?

YES—Go to step 8.

NO—Short in the engine compartment wire harness or dashboard wire harness; replace the faulty harness.■

(cont'd)

Protected by ARK

DTC Troubleshooting (cont'd)

8. Check resistance between the No. 16 terminal of SRS unit connector A (28P) and body ground, and between the No. 28 terminal and body ground. There should be an open circuit, or at least 1 MΩ.

SRS UNIT CONNECTOR A (28P)

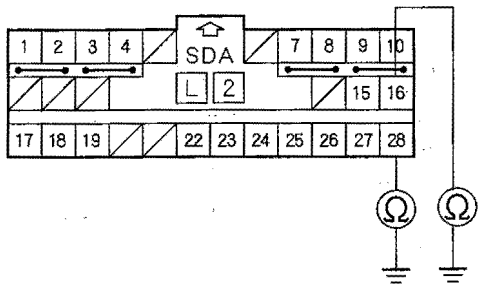

Wire side of female terminals

Is the resistance as specified?

YES—Go to step 9.

NO—Short to ground in the engine compartment wire harness or the dashboard wire harness; replace the faulty harness.■

9. Reconnect the battery negative cable.

10. Turn the ignition switch ON (II).

11. Check for voltage between the No. 28 terminal of SRS unit connector A (28P) and body ground, and between the No. 16 terminal and body ground. There should be 1 V or less.

SRS UNIT CONNECTOR A (28P)

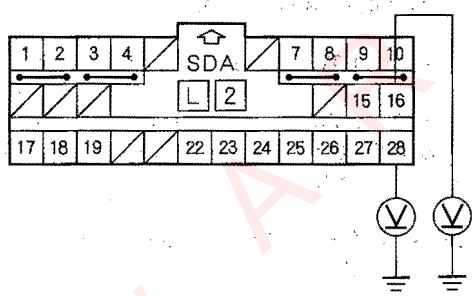

Wire side of female terminals

Is the voltage as specified?

YES—Go to step 12.

NO—Short to power in the engine compartment wire harness or dashboard wire harness; replace the faulty harness.■

12. Turn the ignition switch OFF.

13. Connect the SRS inflator simulator (jumper connector) and the simulator lead to the engine compartment wire harness 2P connector (A).

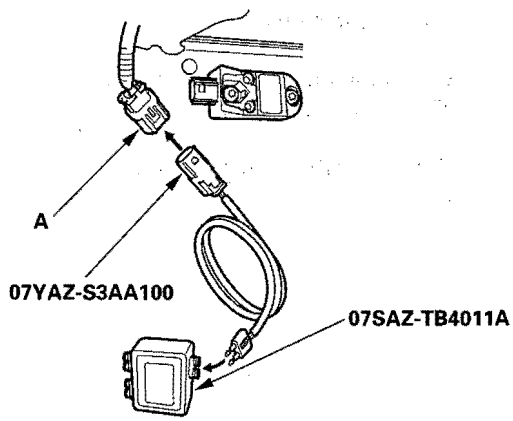

Protected by AIS

14. Check resistance between the No. 16 and No. 28 terminals of SRS unit connector A (28P). There should be 1.0 Ω or less.

SRS UNIT CONNECTOR A (28P)

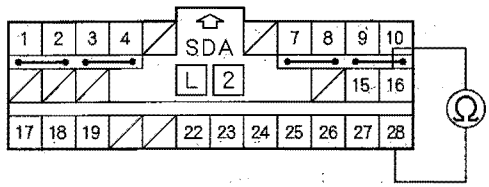

Wire side of female terminals

Is the resistance as specified?

YES—Faulty right front impact sensor or SRS unit; replace the right front impact sensor (see page 23-147). If the problem is still present, replace the SRS unit (see page 23-143). ■

NO—Poor connection at C304, faulty engine compartment wire harness, or faulty dashboard wire harness. Inspect C304. If it is OK, replace the faulty harness. ■

Protected by A R

DTC Troubleshooting (cont'd)

DTC 41-2x (41-20 to 41-29, 41-2A to 41-2F), 41-3x (41-30 to 41-39, 41-3A to 41-3F), 41-Bx (41-B0 to 41-B9, 41-BA to 41-BF): Internal Failure of the Left Front Impact Sensor

1. Erase the DTC memory (see page 23-25).
2. Turn the ignition switch ON (II), and check that the SRS indicator comes on for about 6 seconds and then goes off.

   Does the SRS indicator stay on, and is DTC 41-2x, 41-3x, or 41-Bx indicated?

   YES—Replace the left front impact sensor (see page 23-147). If the DTC returns, replace the SRS unit.■

   NO—Intermittent failure, system is OK at this time. Go to Troubleshooting Intermittent Failures (see page 23-26). If another DTC is indicated, go to the DTC troubleshooting index.

DTC 42-2x (42-20 to 42-29, 42-2A to 42-2F), 42-3x (42-30 to 42-39, 42-3A to 42-3F), 42-Bx (42-B0 to 42-B9, 42-BA to 42-BF): Internal Failure of the Right Front Impact Sensor

1. Erase the DTC memory (see page 23-25).
2. Turn the ignition switch ON (II), and check that the SRS indicator comes on for about 6 seconds and then goes off.

   Does the SRS indicator stay on, and is DTC 42-2x, 42-3x, or 42-Bx indicated?

   YES—Replace the right front impact sensor (see page 23-147). If the DTC returns, replace the SRS unit.■

   NO—Intermittent failure, system is OK at this time. Go to Troubleshooting Intermittent Failures (see page 23-26). If another DTC is indicated, go to the DTC troubleshooting index.

Protected by A.P.

DTC 43-1x (43-10 to 43-19, 43-1A to 43-1F): No Signal from the Left Side Impact Sensor (first)

Special Tools Required
- SRS inflator simulator 07SAZ-TB4011A
- SRS simulator lead H 07YAZ-S3AA100

1. Erase the DTC memory (see page 23-25).

2. Turn the ignition switch ON (II), and check that the SRS indicator comes on for about 6 seconds and then goes off.

   Does the SRS indicator stay on, and is DTC 43-1x indicated?

   YES – Go to step 3.

   NO – Intermittent failure, system is OK at this time. Go to Troubleshooting Intermittent Failures (see page 23-26). If another DTC is indicated, go to the DTC troubleshooting index.

3. Turn the ignition switch OFF. Disconnect the battery negative cable, and wait for 3 minutes.

4. Check the connection between the floor wire harness 2P connector and the left side impact sensor (first).

   Is the connection OK?

   YES – Go to step 5.

   NO – Repair the poor connections and retest. If the DTC 43-1x is still present, go to step 5.

5. Disconnect both seat belt tensioner 4P connectors (see page 23-23).

6. Disconnect the floor wire harness 2P connector (A) from the left side impact sensor (first).

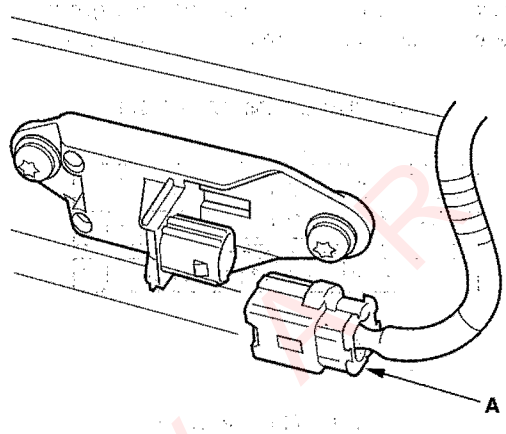

7. Disconnect SRS unit connector B (28P) from the SRS unit (see step 7 on page 23-23).

8. Check resistance between the No. 19 and No. 20 terminals of SRS unit connector B (28P). There should be an open circuit, or at least 1 MΩ.

SRS UNIT CONNECTOR B (28P)

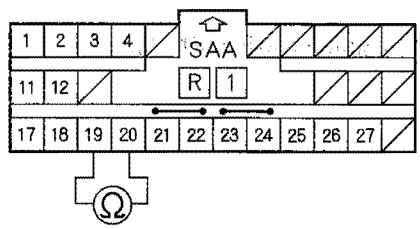

Wire side of female terminals

Is the resistance as specified?

YES – Go to step 9.

NO – Short in the floor wire harness; replace the floor wire harness.■

(cont'd)

DTC Troubleshooting (cont'd)

9. Check resistance between the No. 19 terminal of SRS unit connector B (28P) and body ground, and between the No. 20 terminal and body ground. There should be an open circuit, or at least 1 MΩ.

SRS UNIT CONNECTOR B (28P)

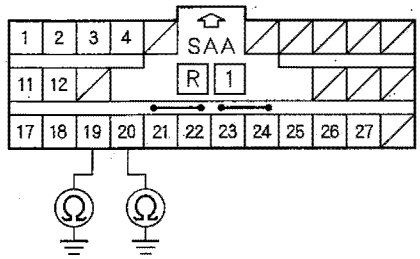

Wire side of female terminals

Is the resistance as specified?

YES – Go to step 10.

NO – Short to ground in the floor wire harness; replace the floor wire harness. ■

10. Reconnect the battery negative cable.

11. Turn the ignition switch ON (II).

12. Check for voltage between the No. 19 terminal of SRS unit connector B (28P) and body ground, and between the No. 20 terminal and body ground. There should be 1 V or less.

SRS UNIT CONNECTOR B (28P)

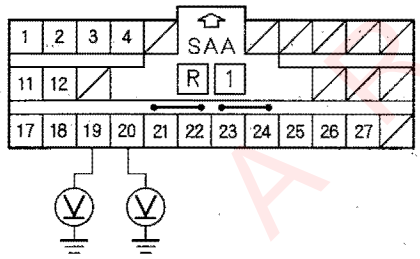

Wire side of female terminals

Is the voltage as specified?

YES – Go to step 13.

NO – Short to power in the floor wire harness; replace the floor wire harness. ■

13. Turn the ignition switch OFF.

14. Connect the SRS inflator simulator (jumper connector) and the simulator lead to the floor wire harness 2P connector (A).

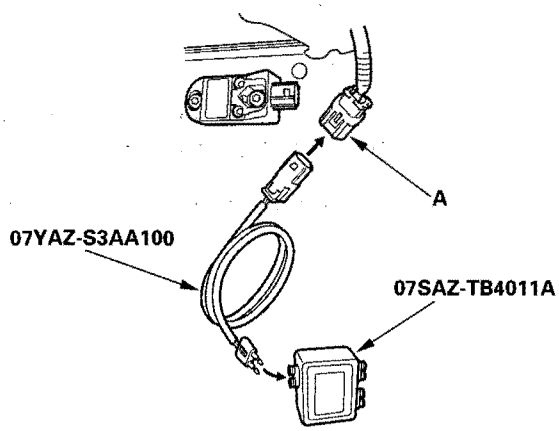

Protected by AR

15. Check resistance between the No. 19 and No. 20 terminals of SRS unit connector B (28P). There should be 1.0 Ω or less.

SRS UNIT CONNECTOR B (28P)

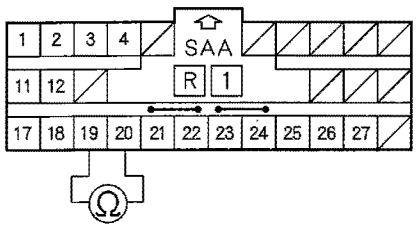

Wire side of female terminals

Is the resistance as specified?

YES—Faulty left side impact sensor (first) or SRS unit; replace the left side impact sensor (first) (see page 23-144). If the problem is still present, replace the SRS unit (see page 23-143).■

NO—Open in the floor wire harness; replace the floor wire harness.■

Protected by AR

DTC Troubleshooting (cont'd)

DTC 44-1x (44-10 to 44-19, 44-1A to 44-1F): No Signal from the Right Side Impact Sensor (first)

Special Tools Required
- SRS inflator simulator 07SAZ-TB4011A
- SRS simulator lead H 07YAZ-S3AA100

1. Erase the DTC memory (see page 23-25).

2. Turn the ignition switch ON (II), and check that the SRS indicator comes on for about 6 seconds and then goes off.

   Does the SRS indicator stay on, and is DTC 44-1x indicated?

   YES—Go to step 3.

   NO—Intermittent failure, system is OK at this time. Go to Troubleshooting Intermittent Failures (see page 23-26). If another DTC is indicated, go to the DTC troubleshooting index.

3. Turn the ignition switch OFF. Disconnect the battery negative cable, and wait for 3 minutes.

4. Check the connection between the floor wire harness 2P connector and the right side impact sensor (first).

   Is the connection OK?

   YES—Go to step 5.

   NO—Repair the poor connections and retest. If the DTC 44-1x is still present, go to step 5.

5. Disconnect both seat belt tensioner 4P connectors (see step 6 on page 23-23).

6. Disconnect the floor wire harness 2P connector (A) from the right side impact sensor (first).

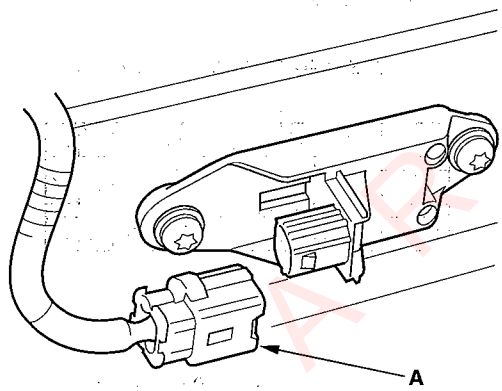

7. Disconnect SRS unit connector B (28P) from the SRS unit (see step 7 on page 23-23).

8. Check resistance between the No. 25 and No. 26 terminals of SRS unit connector B (28P). There should be an open circuit, or at least 1 MΩ.

SRS UNIT CONNECTOR B (28P)

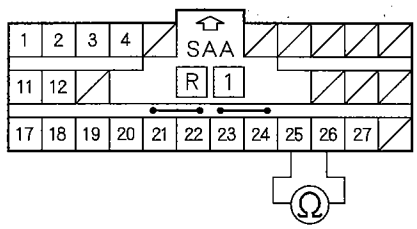

Wire side of female terminals

Is the resistance as specified?

YES—Go to step 9.

NO—Short in the floor wire harness; replace the floor wire harness. ■

Protected by ARP

9. Check resistance between the No. 25 terminal of SRS unit connector B (28P) and body ground, and between the No. 26 terminal and body ground. There should be an open circuit, or at least 1 MΩ.

SRS UNIT CONNECTOR B (28P)

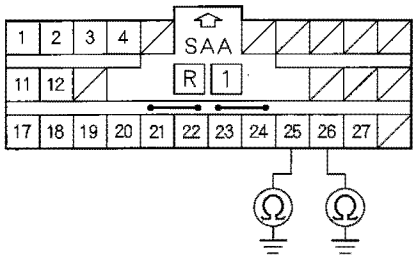

Wire side of female terminals

Is the resistance as specified?

YES – Go to step 10.

NO – Short to ground in the floor wire harness; replace the floor wire harness. ■

10. Reconnect the battery negative cable.

11. Turn the ignition switch ON (II).

12. Check for voltage between the No. 25 terminal of SRS unit connector B (28P) and body ground, and between the No. 26 terminal and body ground. There should be 1 V or less.

SRS UNIT CONNECTOR B (28P)

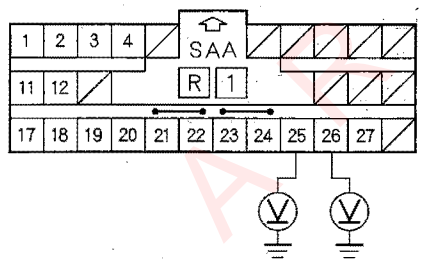

Wire side of female terminals

Is the voltage as specified?

YES – Go to step 13.

NO – Short to power in the floor wire harness; replace the floor wire harness. ■

13. Turn the ignition switch OFF.

14. Connect the SRS inflator simulator (jumper connector) and the simulator lead to the floor wire harness 2P connector (A).

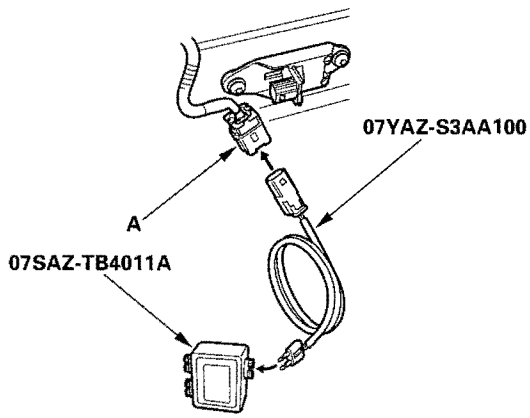

(cont'd)

Protected by A

DTC Troubleshooting (cont'd)

15. Check resistance between the No. 25 and No. 26 terminals of SRS unit connector B (28P). There should be 1.0 Ω or less.

SRS UNIT CONNECTOR B (28P)

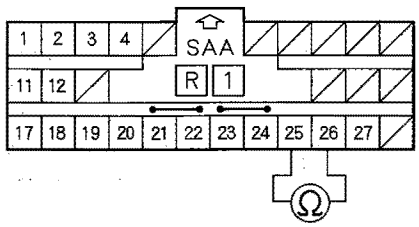

Wire side of female terminals

Is the resistance as specified?

YES—Faulty right side impact sensor (first) or SRS unit; replace the right side impact sensor (first) (see page 23-144). If the problem is still present, replace the SRS unit (see page 23-143). ■

NO—Open in the floor wire harness; replace the floor wire harness. ■

Protected by A R

DTC 43-2x (43-20 to 43-29, 43-2A to 43-2F), 43-3x (43-30 to 43-39, 43-3A to 43-3F), 43-Bx (43-B0 to 43-B9, 43-BA to 43-BF): Internal Failure of the Left Side Impact Sensor (first)

1. Erase the DTC memory (see page 23-25).
2. Turn the ignition switch ON (II), and check that the SRS indicator comes on for about 6 seconds and then goes off.

   Does the SRS indicator stay on, and is DTC 43-2x, 43-3x, or 43-Bx indicated?

   YES—Replace the left side impact sensor (first) (see page 23-144). If the DTC returns, replace the SRS unit (see page 23-143).■

   NO—Intermittent failure, system is OK at this time. Go to Troubleshooting Intermittent Failures (see page 23-26). If another DTC is indicated, go to the DTC troubleshooting index.

DTC 44-2x (44-20 to 44-29, 44-2A to 44-2F), 44-3x (44-30 to 44-39, 44-3A to 44-3F), 44-Bx (44-B0 to 44-B9, 44-BA to 44-BF): Internal Failure of the Right Side Impact Sensor (first)

1. Erase the DTC memory (see page 23-25).
2. Turn the ignition switch ON (II), and check that the SRS indicator comes on for about 6 seconds and then goes off.

   Does the SRS indicator stay on, and is DTC 44-2x, 44-3x, or 44-Bx indicated?

   YES—Replace the right side impact sensor (first) (see page 23-144). If the DTC returns, replace the SRS unit (see page 23-143).■

   NO—Intermittent failure, system is OK at this time. Go to Troubleshooting Intermittent Failures (see page 23-26). If another DTC is indicated, go to the DTC troubleshooting index.

Protected by AR

DTC Troubleshooting (cont'd)

DTC 45-1x (45-10 to 45-19, 45-1A to 45-1F): No Signal from the Left Side Impact Sensor (second)

Special Tools Required
- SRS inflator simulator 07SAZ-TB4011A
- SRS simulator lead H 07YAZ-S3AA100

1. Erase the DTC memory (see page 23-25).

2. Turn the ignition switch ON (II), and check that the SRS indicator comes on for about 6 seconds and then goes off.

   Does the SRS indicator stay on, and is DTC 45-1x indicated?

   YES – Go to step 3.

   NO – Intermittent failure, system is OK at this time. Go to Troubleshooting Intermittent Failures (see page 23-26). If another DTC is indicated, go to the DTC troubleshooting index.

3. Turn the ignition switch OFF. Disconnect the battery negative cable, and wait for 3 minutes.

4. Check the connection between the side curtain airbag subharness 2P connector and the left side impact sensor (second).

   Is the connection OK?

   YES – Go to step 5.

   NO – Repair the poor connections and retest. If the DTC 45-1x is still present, go to step 5.

5. Disconnect the side curtain airbag subharness 2P connector (A) from the left side impact sensor (second).

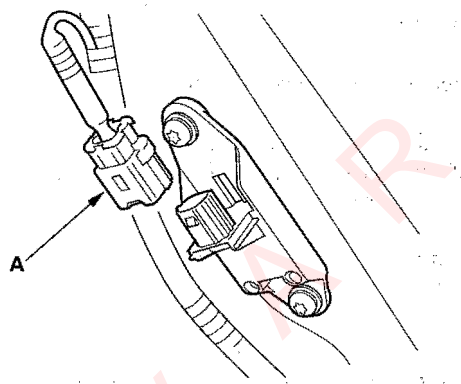

6. Disconnect SRS unit connector C (16P) from the SRS unit (see step 7 on page 23-23).

7. Check resistance between the No. 9 and No. 10 terminals of SRS unit connector C (16P). There should be an open circuit, or at least 1 MΩ.

SRS UNIT CONNECTOR C (16P)

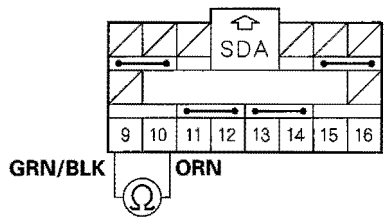

Wire side of female terminals

Is the resistance as specified?

YES – Go to step 8.

NO – Short in the side curtain airbag subharness; replace the side curtain airbag subharness. ■

Protected by ARR

8. Check resistance between the No. 9 terminal of SRS unit connector C (16P) and body ground, and between the No. 10 terminal and body ground. There should be an open circuit, or at least 1 MΩ.

SRS UNIT CONNECTOR C (16P)

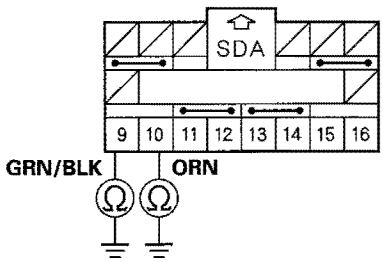

Wire side of female terminals

Is the resistance as specified?

YES—Go to step 9.

NO—Short to ground in the side curtain airbag subharness; replace the side curtain airbag subharness. ■

9. Reconnect the battery negative cable.

10. Turn the ignition switch ON (II).

11. Check for voltage between the No. 9 terminal of SRS unit connector C (16P) and body ground, and between the No. 10 terminal and body ground. There should be 1 V or less.

SRS UNIT CONNECTOR C (16P)

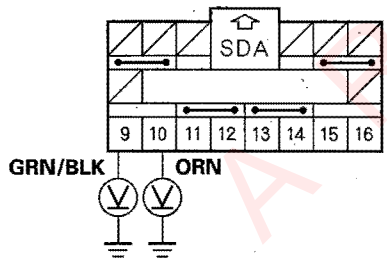

Wire side of female terminals

Is the voltage as specified?

YES—Go to step 12.

NO—Short to power in the side curtain airbag subharness; replace the side curtain airbag subharness. ■

12. Turn the ignition switch OFF.

13. Connect the SRS inflator simulator (jumper connector) and the simulator lead to the side curtain airbag subharness 2P connector (A).

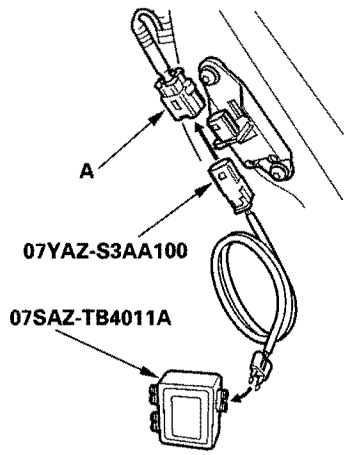

(cont'd)

Protected by AK

DTC Troubleshooting (cont'd)

14. Check resistance between the No. 9 and No. 10 terminals of SRS unit connector C (16P). There should be 1.0 Ω or less.

SRS UNIT CONNECTOR C (16P)

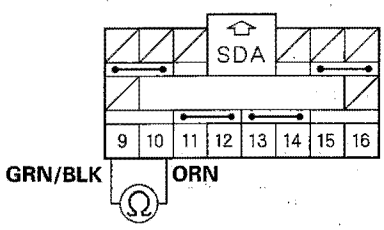

Wire side of female terminals

Is the resistance as specified?

YES—Faulty left side impact sensor (second) or SRS unit; replace the left side impact sensor (second) (see page 23-145). If the problem is still present, replace the SRS unit (see page 23-143). ■

NO—Open in the side curtain airbag subharness; replace the side curtain airbag subharness. ■

Protected by AR

DTC 46-1x (46-10 to 46-19, 46-1A to 46-1F): No Signal from the Right Side Impact Sensor (second)

Special Tools Required
- SRS inflator simulator 07SAZ-TB4011A
- SRS simulator lead H 07YAZ-S3AA100

1. Erase the DTC memory (see page 23-25).

2. Turn the ignition switch ON (II), and check that the SRS indicator comes on for about 6 seconds and then goes off.

   Does the SRS indicator stay on, and is DTC 46-1x indicated?

   YES – Go to step 3.

   NO – Intermittent failure, system is OK at this time. Go to Troubleshooting Intermittent Failures (see page 23-26). If another DTC is indicated, go to the DTC troubleshooting index.

3. Turn the ignition switch OFF. Disconnect the battery negative cable, and wait for 3 minutes.

4. Check the connection between the side curtain airbag subharness 2P connector and the right side impact sensor (second).

   Is the connection OK?

   YES – Go to step 5.

   NO – Repair the poor connections and retest. If the DTC 46-1x is still present, go to step 5.

5. Disconnect the right side curtain airbag 2P connector (A) and side curtain airbag subharness (see step 5 on page 23-22).

6. Disconnect the side curtain airbag subharness 2P connector (A) from the right side impact sensor (second).

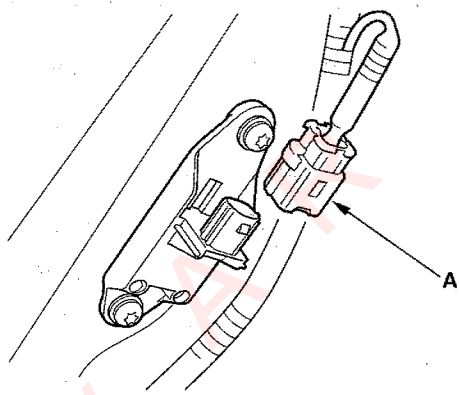

7. Disconnect SRS unit connector C (16P) from the SRS unit (see step 7 on page 23-23).

8. Check resistance between the No. 15 and No. 16 terminals of SRS unit connector C (16P). There should be an open circuit, or at least 1 MΩ.

SRS UNIT CONNECTOR C (16P)

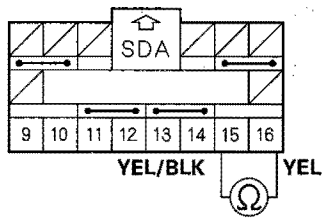

Wire side of female terminals

Is the resistance as specified?

YES – Go to step 9.

NO – Short in the side curtain airbag subharness; replace the side curtain airbag subharness. ■

(cont'd)

Protected by ARK

DTC Troubleshooting (cont'd)

9. Check resistance between the No. 15 terminal of SRS unit connector C (16P) and body ground, and between the No. 16 terminal and body ground. There should be an open circuit, or at least 1 MΩ.

SRS UNIT CONNECTOR C (16P)

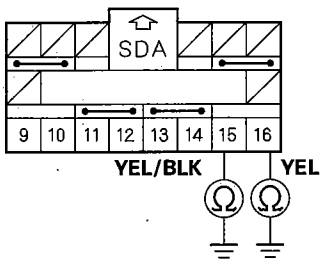

Wire side of female terminals

Is the resistance as specified?

YES—Go to step 10.

NO—Short to ground in the side curtain airbag subharness; replace the side curtain airbag subharness.■

10. Reconnect the battery negative cable.

11. Turn the ignition switch ON (II).

12. Check for voltage between the No. 15 terminal of SRS unit connector C (16P) and body ground, and between the No. 16 terminal and body ground. There should be 1 V or less.

SRS UNIT CONNECTOR C (16P)

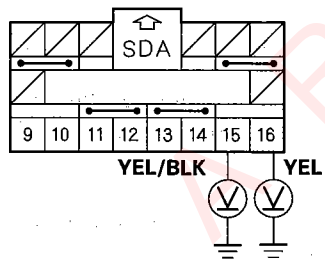

Wire side of female terminals

Is the voltage as specified?

YES—Go to step 13.

NO—Short to power in the side curtain airbag subharness; replace the side curtain airbag subharness.■

13. Turn the ignition switch OFF.

14. Connect the SRS inflator simulator (jumper connector) and the simulator lead to the side curtain airbag subharness 2P connector (A).

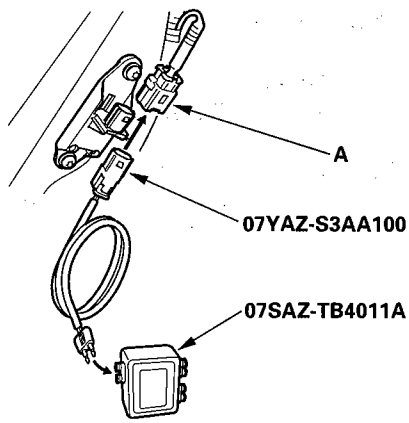

Protected by AR

15. Check resistance between the No. 15 and No. 16 terminals of SRS unit connector C (16P). There should be 1.0 Ω or less.

SRS UNIT CONNECTOR C (16P)

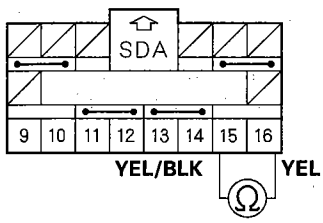

Wire side of female terminals

Is the resistance as specified?

YES—Faulty right side impact sensor (second) or SRS unit; replace the right side impact sensor (second) (see page 23-145). If the problem is still present, replace the SRS unit (see page 23-143). ■

NO—Open in the side curtain airbag subharness; replace the side curtain airbag subharness. ■

Protected by AR

DTC Troubleshooting (cont'd)

DTC 45-2x (45-20 to 45-29, 46-2A to 46-2F)
45-3x (45-30 to 45-39, 45-3A to 45-3F)
45-Bx (45-B0 to 45-B9, 45-BA to 45-BF):
Internal Failure of the Left Side Impact Sensor (second)

1. Erase the DTC memory (see page 23-25).
2. Turn the ignition switch ON (II), and check that the SRS indicator comes on for about 6 seconds and then goes off.

   Does the SRS indicator stay on, and is DTC 45-2x, 45-3x, or 45-Bx indicated?

   YES—Replace the left side impact sensor (second) (see page 23-145). If the DTC returns, replace the SRS unit (see page 23-143). ■

   NO—Intermittent failure, system is OK at this time. Go to Troubleshooting Intermittent Failures (see page 23-26). If another DTC is indicated, go to the DTC troubleshooting index.

DTC 46-2x (46-20 to 46-29, 46-2A to 46-2F)
46-3x (46-30 to 46-39, 46-3A to 46-3F)
46-Bx (46-B0 to 46-B9, 46-BA to 46-BF):
Internal Failure of the Right Side Impact Sensor (second)

1. Erase the DTC memory (see page 23-25).
2. Turn the ignition switch ON (II), and check that the SRS indicator comes on for about 6 seconds and then goes off.

   Does the SRS indicator stay on, and is DTC 46-2x, 46-3x, or 46-Bx indicated?

   YES—Replace the right side impact sensor (second) (see page 23-145). If the DTC returns, replace the SRS unit (see page 23-143). ■

   NO—Intermittent failure, system is OK at this time. Go to Troubleshooting Intermittent Failures (see page 23-26). If another DTC is indicated, go to the DTC troubleshooting index.

Protected by A.P.

DTC 51-2x (51-20 to 51-29, 51-2A to 51-2F), 51-4x (51-40 to 51-49, 51-4A to 51-4F):
Internal Failure of the SRS Unit

NOTE: Before troubleshooting any of these DTCs, check the battery/system voltage. If the voltage is low, repair the charging system or replace the battery before troubleshooting the SRS. If the battery/system voltage is now OK, ask the customer if the battery ever went dead.

1. Erase the DTC memory (see page 23-25).
2. Turn the ignition switch ON (II), and check that the SRS indicator comes on for about 6 seconds and then goes off.

   Does the SRS indicator stay on, and is DTC 51-2x or 51-4x indicated?

   YES—Replace the SRS unit (see page 23-143).■

   NO—Intermittent failure, system is OK at this time. Go to Troubleshooting Intermittent Failures (see page 23-26). If another DTC is indicated, go to the DTC troubleshooting index.

DTC 52-8x (52-80 to 52-89, 52-8A to 52-8F), 52-9x (52-90 to 52-99, 52-9A to 52-9F):
Internal Failure of the SRS Unit

NOTE: Before troubleshooting any of these DTCs, check the battery/system voltage. If the voltage is low, repair the charging system or replace the battery before troubleshooting the SRS. If the battery/system voltage is now OK, ask the customer if the battery ever went dead.

1. Erase the DTC memory (see page 23-25).
2. Turn the ignition switch ON (II), and check that the SRS indicator comes on for about 6 seconds and then goes off.

   Does the SRS indicator stay on, and is DTC 52-8x or 52-9x indicated?

   YES—Replace the SRS unit (see page 23-143).■

   NO—Intermittent failure, system is OK at this time. Go to Troubleshooting Intermittent Failures (see page 23-26). If another DTC is indicated, go to the DTC troubleshooting index.

Protected by AR

DTC Troubleshooting (cont'd)

DTC 52-Ax (52-A0 to 52-A9, 52-AA to 52-AF), 52-Bx (52-B0 to 52-B9, 52-BA to 52-BF), 52-Cx (52-C0 to 52-C9, 52-CA to 52-CF): Internal Failure of the SRS Unit

NOTE: Before troubleshooting any of these DTCs, check the battery/system voltage. If the voltage is low, repair the charging system or replace the battery before troubleshooting the SRS. If the battery/system voltage is now OK, ask the customer if the battery ever went dead.

1. Erase the DTC memory (see page 23-25).
2. Turn the ignition switch ON (II), and check that the SRS indicator comes on for about 6 seconds and then goes off.

   Does the SRS indicator stay on, and is DTC 52-Ax, 52-Bx, or 52-Cx indicated?

   YES—Replace the SRS unit (see page 23-143).■

   NO—Intermittent failure, system is OK at this time. Go to Troubleshooting Intermittent Failures (see page 23-26). If another DTC is indicated, go to the DTC troubleshooting index.

DTC 52-Dx (52-D0 to 52-D9, 52-DA to 52-DF), 52-Ex (52-E0 to 52-E9, 52-EA to 52-EF), 52-Fx (52-F0 to 52-F9, 52-FA to 52-FF): Internal Failure of the SRS Unit

NOTE: Before troubleshooting any of these DTCs, check the battery/system voltage. If the voltage is low, repair the charging system or replace the battery before troubleshooting the SRS. If the battery/system voltage is now OK, ask the customer if the battery ever went dead.

1. Erase the DTC memory (see page 23-25).
2. Turn the ignition switch ON (II), and check that the SRS indicator comes on for about 6 seconds and then goes off.

   Does the SRS indicator stay on, and is DTC 52-Dx, 52-Ex, or 52-Fx indicated?

   YES—Replace the SRS unit (see page 23-143).■

   NO—Intermittent failure, system is OK at this time. Go to Troubleshooting Intermittent Failures (see page 23-26). If another DTC is indicated, go to the DTC troubleshooting index.

Protected by A

DTC 53-1x (53-10 to 53-19, 53-1A to 53-1F), 53-2x (53-20 to 53-29, 53-2A to 53-2F): Internal Failure of the SRS Unit

NOTE: Before troubleshooting any of these DTCs, check the battery/system voltage. If the voltage is low, repair the charging system or replace the battery before troubleshooting the SRS. If the battery/system voltage is now OK, ask the customer if the battery ever went dead.

1. Erase the DTC memory (see page 23-25).
2. Turn the ignition switch ON (II), and check that the SRS indicator comes on for about 6 seconds and then goes off.

   Does the SRS indicator stay on, and is DTC 53-1x or 53-2x indicated?

   YES—Replace the SRS unit (see page 23-143).■

   NO—Intermittent failure, system is OK at this time. Go to Troubleshooting Intermittent Failures (see page 23-26). If another DTC is indicated, go to the DTC troubleshooting index.

DTC 53-3x (53-30 to 53-39, 53-3A to 53-3F), 53-4x (53-40 to 53-49, 53-4A to 53-4F): Internal Failure of the SRS Unit

NOTE: Before troubleshooting any of these DTCs, check the battery/system voltage. If the voltage is low, repair the charging system or replace the battery before troubleshooting the SRS. If the battery/system voltage is now OK, ask the customer if the battery ever went dead.

1. Erase the DTC memory (see page 23-25).
2. Turn the ignition switch ON (II), and check that the SRS indicator comes on for about 6 seconds and then goes off.

   Does the SRS indicator stay on, and is DTC 53-3x or 53-4x indicated?

   YES—Replace the SRS unit (see page 23-143).■

   NO—Intermittent failure, system is OK at this time. Go to Troubleshooting Intermittent Failures (see page 23-26). If another DTC is indicated, go to the DTC troubleshooting index.

Protected by ARS

DTC Troubleshooting (cont'd)

DTC 54-1x (54-10 to 54-19, 54-1A to 54-1F), 54-2x (54-20 to 54-29, 54-2A to 54-2F), 54-3x (54-30 to 54-39, 54-3A to 54-3F), 54-4x (54-40 to 54-49, 54-4A to 54-4F):
Internal Failure of the SRS Unit

NOTE: Before troubleshooting any of these DTCs, check the battery/system voltage. If the voltage is low, repair the charging system or replace the battery before troubleshooting the SRS. If the battery/system voltage is now OK, ask the customer if the battery ever went dead.

1. Erase the DTC memory (see page 23-25).
2. Turn the ignition switch ON (II), and check that the SRS indicator comes on for about 6 seconds and then goes off.

   Does the SRS indicator stay on, and is DTC 54-1x, 54-2x, 54-3x, or 54-4x indicated?

   YES—Replace the SRS unit (see page 23-143).■

   NO—Intermittent failure, system is OK at this time. Go to Troubleshooting Intermittent Failures (see page 23-26). If another DTC is indicated, go to the DTC troubleshooting index.

DTC 54-5x (54-50 to 54-59, 54-5A to 54-5F), 54-6x (54-60 to 54-69, 54-6A to 54-6F), 54-7x (54-70 to 54-79, 54-7A to 54-7F):
Internal Failure of the SRS Unit

NOTE: Before troubleshooting any of these DTCs, check the battery/system voltage. If the voltage is low, repair the charging system or replace the battery before troubleshooting the SRS. If the battery/system voltage is now OK, ask the customer if the battery ever went dead.

1. Erase the DTC memory (see page 23-25).
2. Turn the ignition switch ON (II), and check that the SRS indicator comes on for about 6 seconds and then goes off.

   Does the SRS indicator stay on, and is DTC 54-5x, 54-6x, or 54-7x indicated?

   YES—Replace the SRS unit (see page 23-143).■

   NO—Intermittent failure, system is OK at this time. Go to Troubleshooting Intermittent Failures (see page 23-26). If another DTC is indicated, go to the DTC troubleshooting index.

Protected by A

DTC 55-1x (55-10 to 55-19, 55-1A to 55-1F), 55-2x (55-20 to 55-29, 55-2A to 55-2F):
Internal Failure of the SRS Unit

NOTE: Before troubleshooting any of these DTCs, check the battery/system voltage. If the voltage is low, repair the charging system or replace the battery before troubleshooting the SRS. If the battery/system voltage is now OK, ask the customer if the battery ever went dead.

1. Erase the DTC memory (see page 23-25).
2. Turn the ignition switch ON (II), and check that the SRS indicator comes on for about 6 seconds and then goes off.

   Does the SRS indicator stay on, and is DTC 55-1x or 55-2x indicated?

   YES—Replace the SRS unit (see page 23-143).■

   NO—Intermittent failure, system is OK at this time. Go to Troubleshooting Intermittent Failures (see page 23-26). If another DTC is indicated, go to the DTC troubleshooting index.

DTC 55-3x (55-30 to 55-39, 55-3A to 55-3F), 55-4x (55-40 to 55-49, 55-4A to 55-4F):
Internal Failure of the SRS Unit

NOTE: Before troubleshooting any of these DTCs, check the battery/system voltage. If the voltage is low, repair the charging system or replace the battery before troubleshooting the SRS. If the battery/system voltage is now OK, ask the customer if the battery ever went dead.

1. Erase the DTC memory (see page 23-25).
2. Turn the ignition switch ON (II), and check that the SRS indicator comes on for about 6 seconds and then goes off.

   Does the SRS indicator stay on, and is DTC 55-3x or 55-4x indicated?

   YES—Replace the SRS unit (see page 23-143).■

   NO—Intermittent failure, system is OK at this time. Go to Troubleshooting Intermittent Failures (see page 23-26). If another DTC is indicated, go to the DTC troubleshooting index.

Protected by AR

DTC Troubleshooting (cont'd)

DTC 61-1x (61-10 to 61-19, 61-1A to 61-1F): Open in Driver's Seat Belt Buckle Switch

1. Erase the DTC memory (see page 23-25).
2. Turn the ignition switch ON (II), then buckle and unbuckle the driver's seat belt several times.
3. Read the DTC (see page 23-24).

   Is DTC 61-1x indicated?

   YES—Go to step 4.

   NO—Intermittent failure, system is OK at this time. Go to Troubleshooting Intermittent Failures (see page 23-26).
4. Turn the ignition switch OFF.
5. Disconnect the driver's seat wire harness 3P connector from the driver's seat belt buckle switch 3P connector (A).

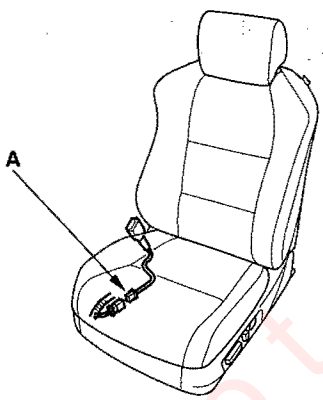

6. Buckle the driver's seat belt.
   - Check resistance between the No. 1 and No. 3 terminals of the driver's seat belt buckle switch 3P connector. There should be 0—1 Ω.
   - Check resistance between the No. 2 and No. 3 terminals of the same connector. There should be an open circuit, or at least 1 MΩ.

DRIVER'S SEAT BELT BUCKLE SWITCH 3P CONNECTOR

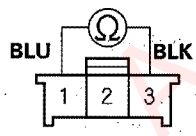

Wire side of female terminals

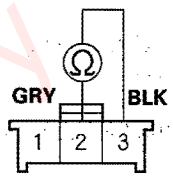

Wire side of female terminals

Are the resistance readings as specified?

YES—Go to step 7.

NO—Replace the driver's seat belt buckle assembly, then clear the DTC.■

Protected by KAR

7. Unbuckle the driver's seat belt.

   - Check resistance between the No. 2 and No. 3 terminals of the driver's seat belt buckle switch 3P connector. There should be 0—1 Ω.
   - Check resistance between the No. 1 and No. 3 terminals of the same connector. There should be an open circuit, or at least 1 MΩ.

DRIVER'S SEAT BELT BUCKLE SWITCH 3P CONNECTOR

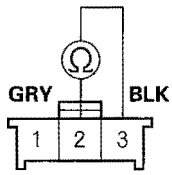

Wire side of female terminals

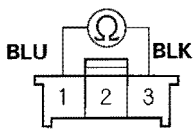

Wire side of female terminals

Is the resistance as specified?

YES—Go to step 8.

NO—Replace the driver's seat belt buckle assembly, then clear the DTC.■

8. Check resistance between the No. 3 terminal of the driver's seat wire harness 3P connector and body ground. There should be 0—1 Ω.

DRIVER'S SEAT WIRE HARNESS 3P CONNECTOR

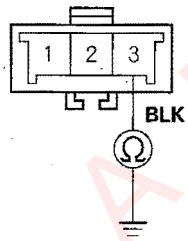

Terminal side of male terminals

Is the resistance as specified?

YES—Go to step 9.

NO—Open in the driver's seat wire harness or floor wire harness, or poor ground connection at G601. If G601 is OK, replace the faulty harness.■

9. Disconnect the battery negative cable, and wait for 3 minutes.

10. Disconnect both seat belt tensioner 4P connectors from the floor wire harness (see step 6 on page 23-23).

11. Disconnect SRS unit connector B (28P) from the SRS unit (see step 7 on page 23-23).

(cont'd)

Protected by AR

DTC Troubleshooting (cont'd)

12. Check resistance between the No. 17 terminal of SRS unit connector B (28P) and the No. 1 terminal of the driver's seat wire harness 3P connector. There should be 0—1 Ω.

DRIVER'S SEAT WIRE HARNESS 3P CONNECTOR **SRS UNIT CONNECTOR B (28P)**

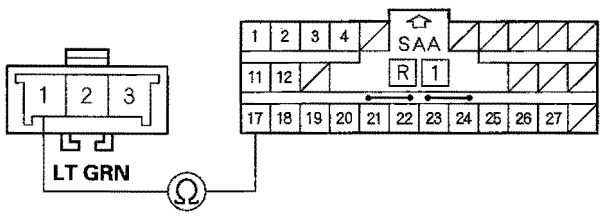

Terminal side of male terminals — Wire side of female terminals

Is the resistance as specified?

YES—Go to step 13.

NO—Open in the driver's seat wire harness or floor wire harness; replace the faulty harness. ■

13. Check resistance between the No. 11 terminal of SRS unit connector B (28P) and the No. 2 terminal of the driver's seat wire harness 3P connector. There should be 0—1 Ω.

DRIVER'S SEAT WIRE HARNESS 3P CONNECTOR **SRS UNIT CONNECTOR B (28P)**

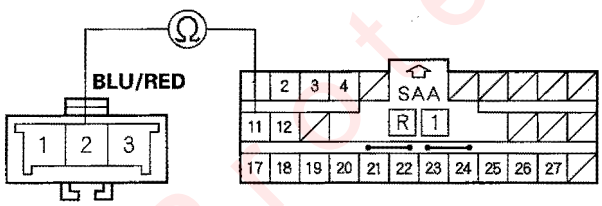

Terminal side of male terminals — Wire side of female terminals

Is the resistance as specified?

YES—Faulty SRS unit; replace the SRS unit (see page 23-143). ■

NO—Open in the driver's seat wire harness, floor wire harness, or the under-dash fuse/relay box, or poor connection at the floor wire harness. Check the connection at the floor wire harness and the Under-dash fuse/relay box. If the connection is OK, replace the faulty harness or part. ■

Protected by AR

DTC 61-2x (61-20 to 61-29, 61-2A to 61-2F): Short in Driver's Seat Belt Buckle Switch

NOTE: This code may inadvertantly be set if power from fuse 21 (METER IG) is lost. If this is the case, clear the code and confirm that the SRS light does not come back on before proceding.

1. Erase the DTC memory (see page 23-25).
2. Turn the ignition switch ON (II), then buckle and unbuckle the driver's seat belt several times.
3. Read the DTC (see page 23-24).

   Is DTC 61-2x indicated?

   YES—Go to step 4.

   NO—Intermittent failure, system is OK at this time. Go to Troubleshooting Intermittent Failures (see page 23-26).
4. Read the DTC (see page 23-24).

   Is DTC 62-2 indicated?

   YES—Go to step 15.

   NO—Go to step 5.
5. Turn the ignition switch OFF.
6. Disconnect the driver's seat harness 3P connector from the driver's seat belt buckle switch 3P connector (A).

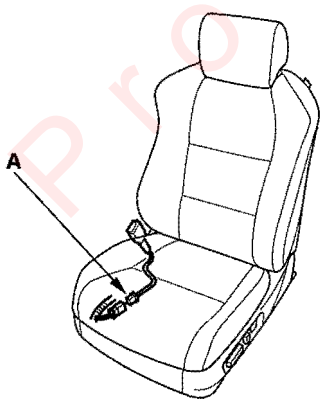

7. Buckle the driver's seat belt.
   - Check resistance between the No. 1 and No. 3 terminals of the driver's seat belt buckle switch 3P connector. There should be 0—1 Ω.
   - Check resistance between the No. 2 and No. 3 terminals of the same connector. There should be an open circuit, or at least 1 MΩ.

DRIVER'S SEAT BELT BUCKLE SWITCH 3P CONNECTOR

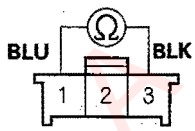

Wire side of female terminals

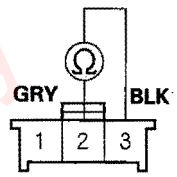

Wire side of female terminals

Are the resistance readings as specified?

YES—Go to step 8.

NO—Replace the driver's seat belt buckle assembly, then clear the DTC. ■

(cont'd)

Protected by XP

DTC Troubleshooting (cont'd)

8. Unbuckle the driver's seat belt.

   - Check resistance between the No. 2 and No. 3 terminals of the driver's seat belt buckle switch 3P connector. There should be 0—1 Ω.
   - Check resistance between the No. 1 and No. 3 terminals of the same connector. There should be an open circuit, or at least 1 MΩ.

DRIVER'S SEAT BELT BUCKLE SWITCH 3P CONNECTOR

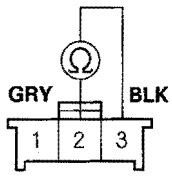

Wire side of female terminals

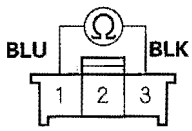

Wire side of female terminals

Is the resistance as specified?

YES—Go to step 9.

NO—Replace the driver's seat belt buckle assembly, then clear the DTC.■

9. Check for continuity between body ground and driver's seat belt buckle switch 3P connector terminals No. 1 and No. 2.

DRIVER'S SEAT BELT BUCKLE SWITCH 3P CONNECTOR

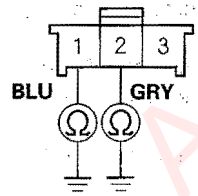

Wire side of female terminals

Is there continuity?

YES—Replace the driver's seat belt buckle assembly.■

NO—Go to step 10.

10. Disconnect the battery negative cable, and wait for 3 minutes.

11. Disconnect both seat belt tensioner 4P connectors from the floor wire harness (see step 6 on page 23-23).

12. Disconnect SRS unit connector B (28P) from the SRS unit (see step 7 on page 23-23).

Protected by AR

13. Check resistance between the No. 2 terminal of the driver's seat wire harness 3P connector and body ground. There should be an open circuit, or at least 1 MΩ.

    NOTE: Some resistance will be read by some meters since the MICU also monitors the seat belt buckle switch.

DRIVER'S SEAT WIRE HARNESS 3P CONNECTOR

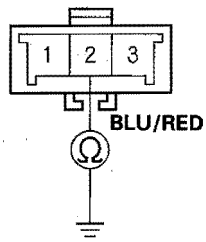

Terminal side of male terminals

Is the resistance as specified?

YES—Go to step 14.

NO—Short to ground in the driver's seat wire harness, floor wire harness, or multiplex control unit. Replace the faulty harness or part.■

14. Disconnect the driver's seat belt tension reducer solenoid 2P connector (see page 22-298). Check resistance between the No. 1 terminal of the driver's seat wire harness 3P connector and body ground. There should be an open circuit, or at least 1 MΩ.

DRIVER'S SEAT WIRE HARNESS 3P CONNECTOR

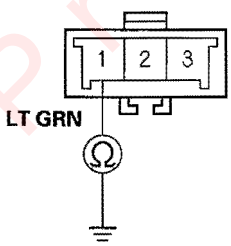

Terminal side of male terminals

Is the resistance as specified?

YES—Faulty SRS unit; replace the SRS unit (see page 23-143).■

NO—Short to ground in the driver's seat wire harness or floor wire harness; replace the faulty harness.■

15. Disconnect the driver's seat belt tension reducer solenoid 2P connector (see page 22-298).

16. Measure voltage between the No. 1 terminal of the floor wire harness 2P connector and body ground. There should be battery voltage.

FLOOR WIRE HARNESS 2P CONNECTOR

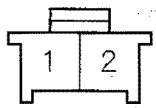

Wire side of female connector

Is the battery voltage?

YES—Go to step 5.

NO—Open in the YELLOW wire between the under-dash fuse/relay box and the floor wire harness 2P connector. Replace the faulty harness.

Protected by MR

DTC Troubleshooting (cont'd)

DTC 62-1x (62-10 to 62-19, 62-1A to 62-1F): Open in Front Passenger's Seat Belt Buckle Switch

1. Erase the DTC memory (see page 23-25).
2. Turn the ignition switch ON (II), then buckle and unbuckle the front passenger's seat belt several times.
3. Read the DTC (see page 23-24).

   Is DTC 62-1x indicated?

   YES—Go to step 4.

   NO—Intermittent failure, system is OK at this time. Go to Troubleshooting Intermittent Failures (see page 23-26).
4. Turn the ignition switch OFF.
5. Disconnect the front passenger's seat belt buckle switch 3P connector (A) from the front passenger's seat wire harness.

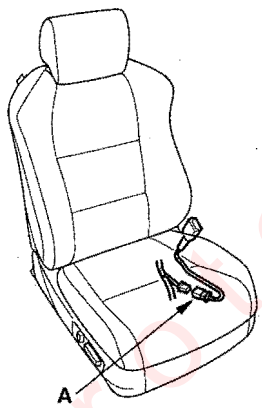

6. Buckle the front passenger's seat belt.
   - Check resistance between the No. 1 and No. 3 terminals of the front passenger's seat belt buckle switch 3P connector. There should be 0—1 Ω.
   - Check resistance between the No. 1 and No. 2 terminals of the same connector. There should be an open circuit, or at least 1 MΩ.

FRONT PASSENGER'S SEAT BELT BUCKLE SWITCH 3P CONNECTOR

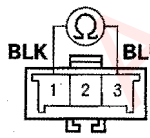

Terminal side of male terminals

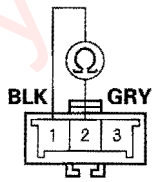

Terminal side of male terminals

Is the resistance as specified?

YES—Go to step 7.

NO—Replace the front passenger's seat belt buckle assembly, then clear the DTC. ■

Projected by AR

7. Unbuckle the front passenger's seat belt.

   - Check resistance between the No. 1 and No. 2 terminals of the front passenger's seat belt buckle switch 3P connector. There should be 0—1 Ω.
   - Check resistance between the No. 1 and No. 3 terminals of the same connector. There should be an open circuit, or at least 1 MΩ.

FRONT PASSENGER'S SEAT BELT BUCKLE SWITCH 3P CONNECTOR

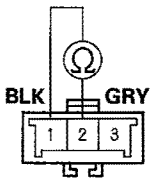

Terminal side of male terminals

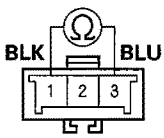

Terminal side of male terminals

Is the resistance as specified?

YES—Go to step 8.

NO—Replace the front passenger's seat belt buckle assembly, then clear the DTC.■

8. Check resistance between the No. 1 terminal of the front passenger's seat wire harness 3P connector and body ground. There should be 0—1 Ω.

FRONT PASSENGER'S SEAT WIRE HARNESS 3P CONNECTOR

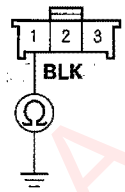

Wire side of female terminals

Is the resistance as specified?

YES—Go to step 9.

NO—Open in the front passenger's seat wire harness or floor wire harness, or poor ground connection at G602. If G602 is OK, replace the faulty harness.■

9. Disconnect the battery negative cable, and wait for 3 minutes.

10. Disconnect both seat belt tensioner 4P connectors from the floor wire harness (see step 6 on page 23-23).

11. Disconnect SRS unit connector B (28P) from the SRS unit (see step 7 on page 23-23).

(cont'd)

Protected by AR

DTC Troubleshooting (cont'd)

12. Check resistance between the No. 18 terminal of SRS unit connector B (28P) and the No. 3 terminal of the front passenger's seat wire harness 3P connector. There should be 0—1 Ω.

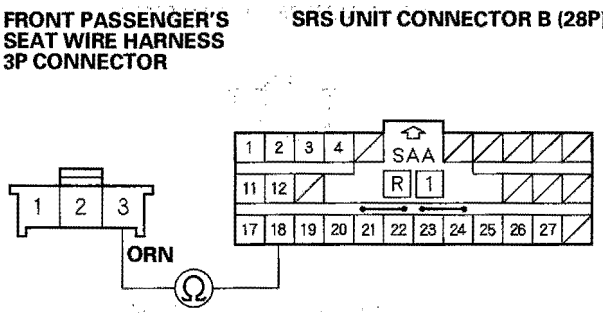

Is the resistance as specified?

YES—Go to step 13.

NO—Open in the front passenger's seat wire harness or floor wire harness; replace the faulty harness.■

13. Check resistance between the No. 12 terminal of SRS unit connector B (28P) and the No. 2 terminal of the front passenger's seat wire harness 3P connector. There should be 0—1 Ω.

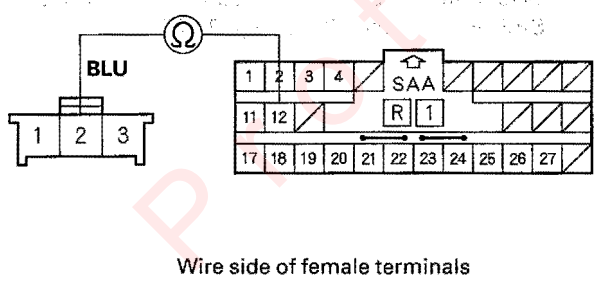

Is the resistance as specified?

YES—Faulty SRS unit; replace the SRS unit (see page 23-143).■

NO—Open in the front passenger's seat wire harness or floor wire harness; replace the faulty harness.■

Protected by AR

DTC 62-2x (62-20 to 62-29, 62-2A to 62-2F): Short in Front Passenger's Seat Belt Buckle Switch

NOTE: If DTC 61-2 is also set, troubleshoot and repair DTC 61-2 before proceeding.

1. Erase the DTC memory (see page 23-25).
2. Turn the ignition switch ON (II), then buckle and unbuckle the front passenger's seat belt several times.
3. Read the DTC (see page 23-24).

   Is DTC 62-2x indicated?

   YES—Go to step 4.

   NO—Intermittent failure, system is OK at this time. Go to Troubleshooting Intermittent Failures (see page 23-26).
4. Turn the ignition switch OFF.
5. Disconnect the front passenger's seat belt buckle switch 3P connector (A) from the front passenger's seat wire harness.

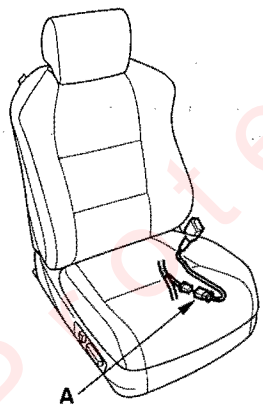

6. Buckle the front passenger's seat belt.
   - Check resistance between the No. 1 and No. 3 terminals of the front passenger's seat belt buckle switch 3P connector. There should be 0—1 Ω.
   - Check resistance between the No. 1 and No. 2 terminals of the same connector. There should be an open circuit, or at least 1 MΩ.

FRONT PASSENGER'S SEAT BELT BUCKLE SWITCH 3P CONNECTOR

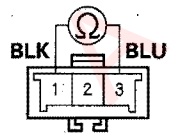

Terminal side of male terminals

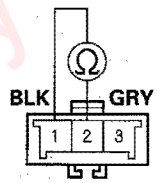

Terminal side of male terminals

Is the resistance as specified?

YES—Go to step 7.

NO—Replace the front passenger's seat belt buckle assembly, then clear the DTC.■

(cont'd)

Protected by

DTC Troubleshooting (cont'd)

7. Unbuckle the front passenger's seat belt.

   - Check resistance between the No. 1 and No. 2 terminals of the front passenger's seat belt buckle switch 3P connector. There should be 0—1 Ω.
   - Check resistance between the No. 1 and No. 3 terminals of the same connector. There should be an open circuit, or at least 1 MΩ.

FRONT PASSENGER'S SEAT BELT BUCKLE SWITCH 3P CONNECTOR

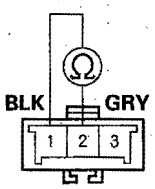

Terminal side of male terminals

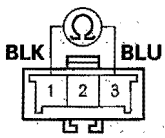

Terminal side of male terminals

Is the resistance as specified?

YES—Go to step 8.

NO—Replace the front passenger's seat belt buckle assembly, then clear the DTC.■

8. Check for continuity between body ground and front passenger's seat belt buckle switch 3P connector terminals No. 2 and No. 3.

FRONT PASSENGER'S SEAT BELT BUCKLE SWITCH 3P CONNECTOR

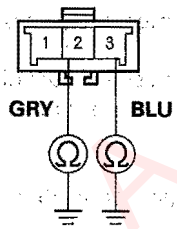

Terminal side of male terminals

Is the continuity?

YES—Replace the front passenger's seat belt buckle assembly.■

NO—Go to step 9.

9. Disconnect the battery negative cable, and wait for 3 minutes.

10. Disconnect both seat belt tensioner 4P connectors from the floor wire harness (see step 6 on page 23-23).

11. Disconnect SRS unit connector B (28P) from the SRS unit (see step 7 on page 23-23).

Protected by A R

12. Check resistance between the No. 2 terminal of the front passenger's seat wire harness 3P connector and body ground. There should be an open circuit, or at least 1 MΩ.

FRONT PASSENGER'S SEAT WIRE HARNESS 3P CONNECTOR

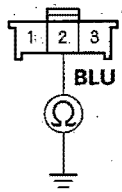

Wire side of female terminals

Is the resistance as specified?

YES – Go to step 13.

NO – Short to ground in the front passenger's seat wire harness or floor wire harness; replace the faulty harness. ■

13. Disconnect the front passenger's seat belt tension reducer solenoid 2P connector (see page 22-298). Check resistance between the No. 3 terminal of the front passenger's seat wire harness 3P connector and body ground. There should be an open circuit, or at least 1 MΩ.

FRONT PASSENGER'S SEAT WIRE HARNESS 3P CONNECTOR

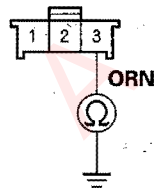

Wire side of female terminals

Is the resistance as specified?

YES – Faulty SRS unit; replace the SRS unit (see page 23-143). ■

NO – Short to ground in the fornt passenger's seat wire harness or floor wire harness; replace the faulty harness. ■

Protected by AR

DTC Troubleshooting (cont'd)

DTC 85-61: No Signal from OPDS Unit

DTC 85-62: Non-stipulated Response Date

NOTE: A new (uninitialized) OPDS unit installed with a faulty OPDS sensor can also cause DTC 85-71

1. Make sure nothing is on the front passenger's seat.
2. Erase the DTC memory (see page 23-25).
3. Read the DTC (see page 23-24).

   Is DTC 85-61 or 85-62 indicated?

   YES – Go to step 4.

   NO – Intermittent failure, system is OK at this time. Go to Troubleshooting Intermittent Failures (see page 23-26). If another DTC is indicated, go to the DTC Troubleshooting Index.
4. Check the connection between the OPDS unit harness 8P connector and the OPDS unit.

   Is the connection OK?

   YES – Go to step 5.

   NO – Repair the poor connection and retest. If DTC 85-61 or 85-62 is still present, go to step 5.
5. Turn the ignition switch OFF.
6. Check the No. 10 (7.5A) fuse in the under-dash fuse/relay box.

   Is the fuse OK?

   YES – Go to step 7.

   NO – Replace the fuse, then turn the ignition switch ON (II). If the fuse blows again, check for a short in the No. 10 (7.5A) fuse circuit (dashboard wire harness, floor wire harness, or OPDS unit harness). ■
7. Disconnect the OPDS unit harness 8P connector D from the OPDS unit.

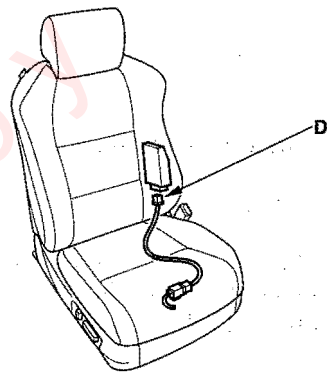

8. Turn the ignition switch ON (II).
9. Check for voltage between the No. 4 terminal of the OPDS unit 8P connector D and body ground. There should battery voltage.

OPDS UNIT 8P CONNECTOR D

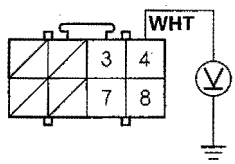

Wire side of female terminals

Is there battery voltage?

YES – Go to step 14.

NO – Go to step 10.

Protected by AP

10. Turn the ignition switch OFF.

11. Disconnect dashboard wire harness 8P connector C502 (A) from the floor wire harness connector C502 (B).

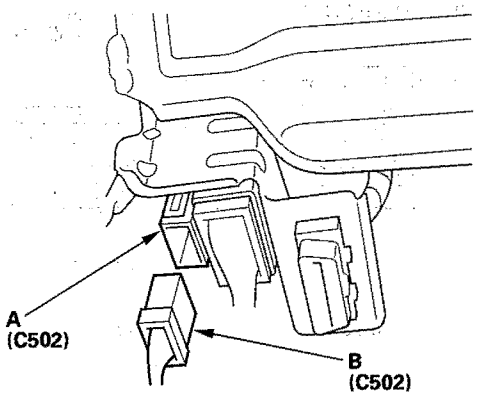

12. Turn the ignition switch ON (II).

13. Check for voltage between the No. 4 terminal of the dashboard wire harness 8P connector C502 and body ground. There should be battery voltage.

DASHBOARD WIRE HARNESS 8P CONNECTOR C502

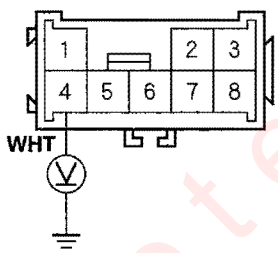

Terminal side of male terminals

Is there battery voltage?

YES—Open in the WHT wire of the floor wire harness or OPDS unit harness; replace the faulty harness. ■

NO—Check connections at the under-dash fuse/relay box. If the connections are OK, there is an open in the WHT wire of the dashboard wire harness; replace the dashboard wire harness. ■

14. Turn the ignition switch OFF.

15. Check resistance between the No. 8 terminal of the OPDS unit 8P connector D and body ground. There should be 0—1.0 Ω.

OPDS UNIT 8P CONNECTOR D

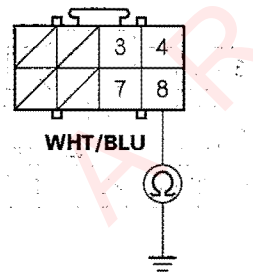

Wire side of female terminals

Is the resistance as specified?

YES—Go to step 16.

NO—Open in the OPDS unit harness or floor wire harness or poor ground at G602; replace the faulty harness or repair G602. ■

16. Turn the ignition switch OFF. Disconnect the battery negative cable, and wait for 3 minutes.

17. Disconnect both seat belt tensioner 4P connectors (see step 6 on page 23-23).

(cont'd)

Protected by AR

DTC Troubleshooting (cont'd)

18. Disconnect SRS unit connector B (28P) from the SRS unit (see step 7 on page 23-23).

19. Check resistance between the No. 27 terminal of SRS unit connector B (28P) and body ground. There should be an open circuit, or at least 1 MΩ.

SRS UNIT CONNECTOR B (28P)

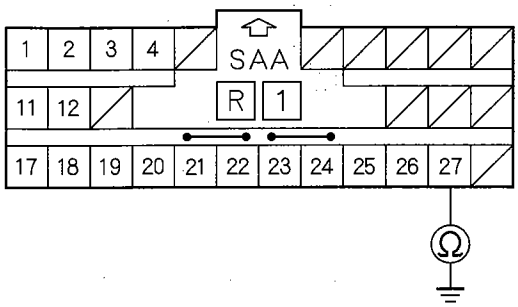

Wire side of female terminals

Is the resistance as specified?

YES—Go to step 20.

NO—Go to step 23.

20. Check resistance between the No. 27 terminal of SRS unit connector B (28P) and the No. 7 terminal of the OPDS unit 8P connector D. There should be 0—1.0 Ω.

SRS UNIT CONNECTOR B (28P) **OPDS UNIT 8P CONNECTOR D**

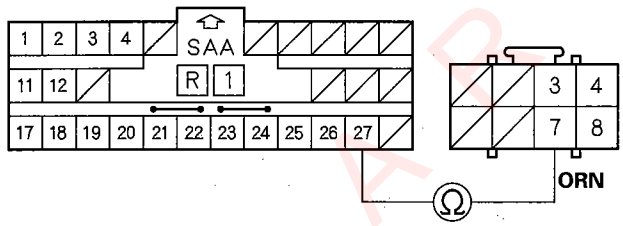

Wire side of female terminals

Is the resistance as specified?

YES—Faulty OPDS unit, OPDS sensor, or SRS unit; replace the OPDS unit (see page 23-146). If the problem is still present, replace the OPDS sensor (see page 20-101), or SRS unit (see page 23-143). ■

NO—Go to step 21.

Protected by AP

21. Disconnect the floor wire harness 4P connector (A) from the OPDS unit harness.

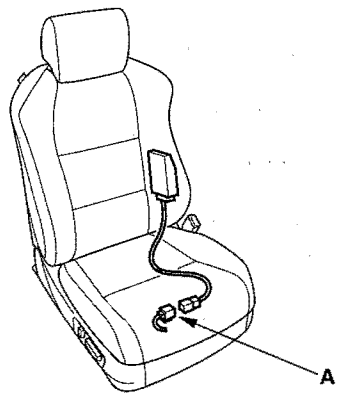

22. Check resistance between the No. 27 terminal of SRS unit connector B (28P) and the No. 4 terminal of the floor wire harness 4P connector. There should be 0 — 1.0 Ω.

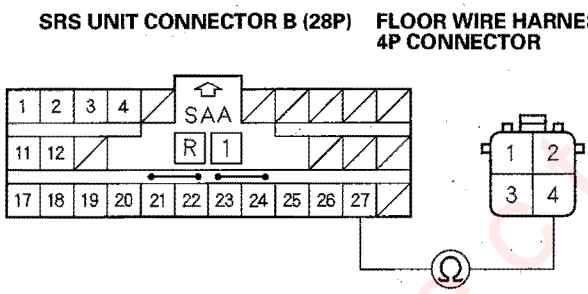

Wire side of female terminals

Is the resistance as specified?

YES — Open in the OPDS unit harness; replace the OPDS unit harness. ■

NO — Open in the GRN/ORN wire of the floor wire harness; replace the floor wire harness. ■

23. Disconnect floor wire harness 4P connector (A) from the OPDS unit harness.

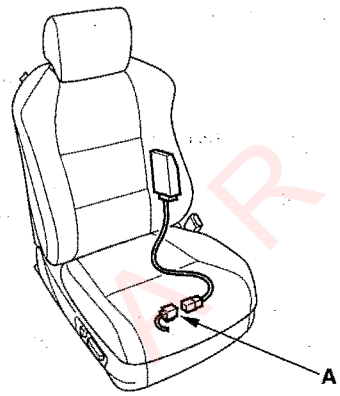

24. Check resistance between the No. 27 terminal of SRS unit connector B (28P) and body ground. There should be an open circuit, or at least 1 MΩ.

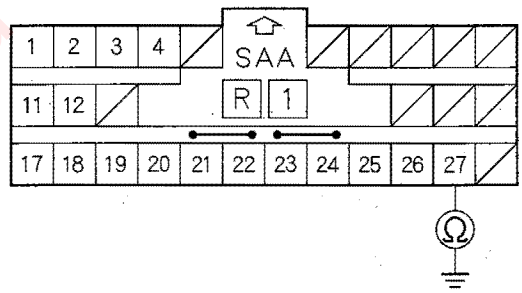

Wire side of female terminals

Is the resistance as specified?

YES — Short to ground in the OPDS unit harness; replace the OPDS unit harness. ■

NO — Short to ground in the floor wire harness; replace the floor wire harness. ■

Protected by MR

DTC Troubleshooting (cont'd)

DTC 85-4x (85-40 to 85-49, 85-4A to 85-4F), 85-5x (85-50 to 85-59, 85-5A to 85-5F), 85-63, 85-64, 85-71, 85-78, 85-85, 85-86, 85-87: Internal Failure of OPDS Unit

NOTE: An incorrect OPDS unit can cause DTC 85-63.

1. Erase the DTC memory (see page 23-25).
2. Turn the ignition switch ON (II), and check that the SRS indicator comes on for about 6 seconds and then goes off.

   Does the SRS indicator stay on, and is DTC 85-4x, 85-5x, 85-63, 85-64 or 85-71, 85-78, 85-85, 85-86, 85-87 indicated?

   YES—Go to step 3.

   NO—Intermittent failure, system is OK at this time. Go to Troubleshooting Intermittent Failures (see page 23-26). If another DTC is indicated, go to the DTC troubleshooting index.
3. Initialize the OPDS unit (see page 23-26).
4. Turn the ignition switch ON (II), and check that the SRS indicator comes on for about 6 seconds and then goes off.

   Does the SRS indicator go off and stay off?

   YES—The system is OK.■

   NO—Replace the OPDS unit and retest. If the problem is still present, replace the OPDS sensor/ seat-back foam (see page 20-101).■

DTC 85-79: OPDS Sensor Drift Check Failure

1. Make sure nothing is on the front passenger's seat.
2. Erase the DTC memory (see page 23-25).
3. Turn the ignition switch ON (II), and check that the SRS indicator comes on for about 6 seconds and then goes off.

   Does the SRS indicator stay on, and is DTC 85-79 indicated?

   YES—Turn the ignition switch OFF, and go to step 4.

   NO—Intermittent failure, system is OK at this time. Go to Troubleshooting Intermittent Failures (see page 23-26). If another DTC is indicated, go to the DTC troubleshooting index.
4. Initialize the OPDS unit (see page 23-26).
5. Turn the ignition switch ON (II), and check that the SRS indicator comes on for about 6 seconds and then goes off.

   Does the SRS indicator go off and stay off?

   YES—The system is OK.■

   NO—Replace the OPDS unit and retest. If the problem is still present, replace the OPDS sensor/ seat-back foam (see page 20-101).■

Protected by AR

DTC 86-1x (86-10 to 86-19, 86-1A to 86-1F):
Faulty OPDS Seat-back Sensor

DTC 86-2x (86-20 to 86-29, 86-2A to 86-2F):
Faulty OPDS Seat Support Sensor

1. Erase the DTC memory (see page 23-25).

2. Turn the ignition switch ON (II), and check that the SRS indicator comes on for about 6 seconds and then goes off.

   Does the SRS indicator go off and stay off?

   YES—Intermittent failure, system is OK at this time. Go to Troubleshooting Intermittent Failures (see page 23-26).

   NO—Go to step 3.

   NOTE: Aftermarket devices (fluorescent lights, laptop computers, etc.) used near the front passenger's seat-back can interfere with the seat-back sensors and cause a false DTC 86-1x or 86-2x. If one of these devices was used, erase the DTC, operate the device near the seat-back, and recheck for DTCs. If DTC 86-1x or 86-2x is reset, erase it, and do not use the device near the seat-back.

3. Check the connection at the OPDS sensor harness connector and the OPDS unit connector.

   Are the connections OK?

   YES—Go to step 4.

   NO—Reconnect the OPDS sensor harness connector, and clear the DTC. ■

4. Replace the OPDS sensor/seat-back foam (see page 20-101), and initialize the OPDS (see page 23-26).

5. Erase the DTC memory, then check for DTC 86-1x or 86-2x.

   Is DTC 86-1x or 86-2x indicated?

   YES—Replace the OPDS unit (see page 23-146). ■

   NO—The system is OK. ■

Protected by AR

DTC Troubleshooting (cont'd)

DTC 87-31, 87-32: Side Airbag Cutoff Indicator Stays ON/OFF

1. Erase the DTC memory (see page 23-25).
2. Turn the ignition switch ON (II), and check that the SRS indicator comes on for about 6 seconds and then goes off.

   Does the SRS indicator go off and stay off?

   YES—Intermittent failure, system is OK at this time. Go to Troubleshooting Intermittent Faliures (see page 23-26).

   NO—Go to step 3.
3. Turn the ignition switch OFF. Make sure nothing is on the front passenger's seat.
4. Disconnect the OPDS unit 8P connector D from the OPDS unit.

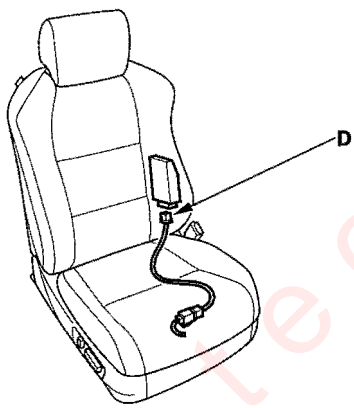

5. Turn the ignition switch ON (II).
6. Check for voltage between the No. 3 terminal of the OPDS unit 8P connector D and body ground. There should be battery voltage.

OPDS UNIT 8P CONNECTOR D

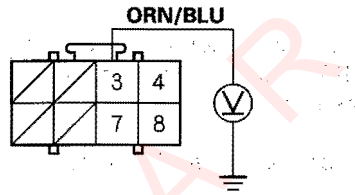

Wire side of female terminals

Is there battery voltage?

YES—Faulty OPDS unit or gauge control module; replace the OPDS unit (see page 23-146). If the DTC resets replace the gauge control module. ■

NO—Go to step 7.

7. Turn the ignition switch OFF.
8. Disconnect gauge control module connector B (18P) from the gauge control module (see page 22-265).

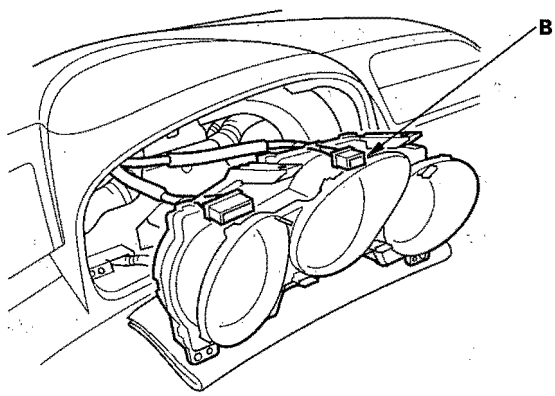

Protected by AR

9. Check resistance between the No. 3 terminal of the OPDS unit 8P connector D and body ground. There should be an open circuit, or at least 1 MΩ.

OPDS UNIT 8P CONNECTOR D

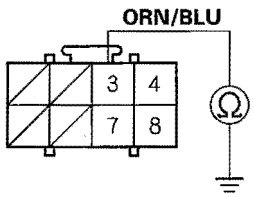

Wire side of female terminals

Is the resistance as specified?

YES—Go to step 10.

NO—Short to ground in the OPDS unit harness, floor wire harness, or dashboard wire harness; replace the faulty harness.

10. Check resistance between the No. 3 terminal of the OPDS unit 8P connector D and the No. 12 terminal of gauge assembly connector B (18P). There should be 0—1.0 Ω.

GAUGE CONTROL MODULE CONNECTOR B (18P)

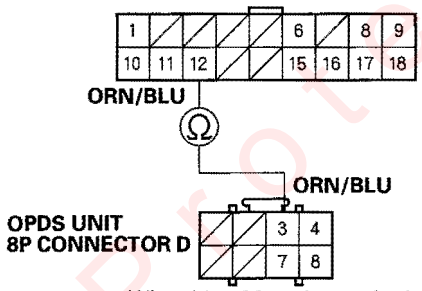

Wire side of female terminals

Is the resistence as specified?

YES—Replace the gauge control module (see page 22-265).■

NO—Open in the OPDS unit harness, floor wire harness, or dashboard wire harness; replace the faulty harness.■

Protected by AR

DTC Troubleshooting (cont'd)

DTC E4-11, F1-11, F2-11, F3-11, F4-11:
Airbags, Side airbags, and/or Seat Belt Tensioners Deployed.

The SRS unit must be replaced after any airbags and/or tensioners have deployed (see page 23-143). ■

NOTE: If E4-11 is indicated, replace the right side impact sensor (first) (see page 23-125).

Protected by AR

DTC 91-1x (91-10 to 91-19, 91-1A to 91-1F): Internal Failure of the SRS Unit

NOTE: Before troubleshooting any of these DTCs, check the battery/system voltage. If the voltage is low, repair the charging system or replace the battery before troubleshooting the SRS. If the battery/system voltage is now OK, ask the customer if the battery ever went dead.

1. Erase the DTC memory (see page 23-25).
2. Turn the ignition switch ON (II), and check that the SRS indicator comes on for about 6 seconds and then goes off.

   Does the SRS indicator stay on, and is DTC 91-1x indicated?

   YES—Faulty SRS unit; replace the SRS Unit (see page 23-143).■

   NO—Intermittent failure, system is OK at this time. Go to Troubleshooting Intermittent Failures (see page 23-26). If another DTC is indicated, go to the DTC troubleshooting index.

DTC A1-1x (A1-10 to A1-19, A1-1A to A1-1F): Faulty Power Supply (VA line)

1. Check the No. 10 (7.5A) fuse in the under-dash fuse/relay box.

   Is the fuse OK?

   YES—Go to step 12.

   NO—Go to step 3.
2. Replace the No. 10 (7.5A) fuse.
3. Turn the ignition switch ON (II), and wait for 30 seconds. Then turn the ignition switch OFF.
4. Check the No. 22 (10A) fuse,

   Is the fuse OK?

   YES—Intermittent failure, system is OK at this time. Go to Troubleshooting Intermittent Failures (see page 23-26). If another DTC is indicated, go to the DTC troubleshooting index.

   NO—Go to step 5.
5. Replace the No. 22 (10A) fuse.
6. Turn the ignition switch OFF.
7. Disconnect the battery negative cable, and wait for 3 minutes.
8. Disconnect SRS unit connector A (28P) from the SRS unit (see page 23-23).
9. Reconnect the battery negative cable.
10. Turn the ignition switch ON (II), and wait for 30 seconds. Then turn the ignition switch OFF.

(cont'd)

Protected by A R

DTC Troubleshooting (cont'd)

11. Check the No. 10 (7.5A) fuse.

    Is the fuse OK?

    YES—Short to ground in the SRS unit; replace the SRS unit (see page 23-143).■

    NO—Short to ground in the dashboard wire harness or in the under-dash fuse/relay box No. 10 (7.5A) fuse line; replace the dashboard wire harness. If the problem is still there, replace the under-dash fuse/relay box.■

12. Turn the ignition switch OFF. Disconnect the battery negative cable, and wait for 3 minutes.

13. Disconnect the battery negative cable, and wait for 3 minutes.

14. Disconnect SRS unit connector A (28P) from the SRS unit (see step 7 on page 23-23).

15. Reconnect the battery negative cable.

16. Connect a voltmeter between the No. 17 terminal of SRS unit connector A (28P) and body ground. Turn the ignition switch ON (II), and measure voltage. There should be battery voltage.

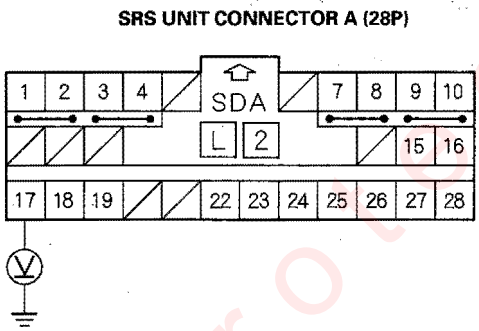

Wire side of female terminals

Is there battery voltage?

YES—Faulty SRS unit or poor contact at SRS unit connector A (28P) and the SRS unit; check the connection. If the connection is OK, replace the SRS unit (see page 23-143).■

NO—Go to step 17.

17. Turn the ignition switch OFF.

18. Disconnect under-dash fuse/relay box connector S (2P).

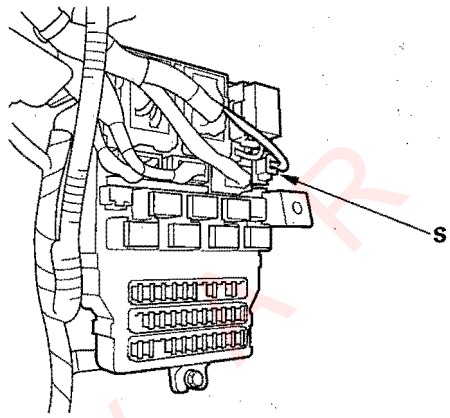

19. Check resistance between the No. 1 terminal of under-dash fuse/relay box connector S (2P) and the No. 17 terminal of SRS unit connector A (28P). There should be 0—1.0 Ω.

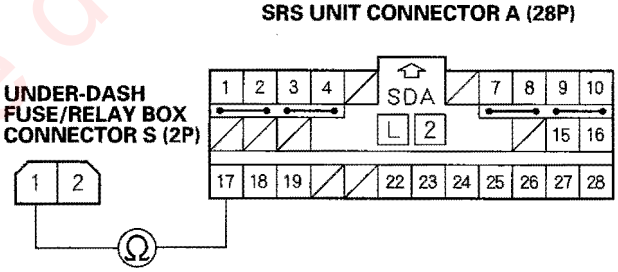

Wire side of female terminals

Is the resistance as specified?

YES—Open in the under-dash fuse/relay box or poor contact between connector S (2P) and the under-dash fuse/relay box; check the connection. If the connection is OK, replace the under-dash fuse/relay box.■

NO—Open in the dashboard wire harness; replace the dashboard wire harness.■

Protected by KAR

DTC A2-1x (A2-10 to A2-19, A2-1A to A2-1F): Faulty Power Supply (VB line)

1. Check the No. 22 (10A) fuse in the under-dash fuse/relay box.

   Is the fuse OK?

   YES—Go to step 12.

   NO—Go to step 2.

2. Replace the No. 22 (10A) fuse.

3. Turn the ignition switch ON (II), and wait for 30 seconds. Then turn the ignition switch OFF.

4. Check the No. 22 (10A) fuse.

   Is the fuse OK?

   YES—Intermittent Failure, system is OK at this time. Go to troubleshooting Intermittent Failures (see page 23-26), If another DTC is indicated, go to the DTC troubleshooting index.■

   NO—Go to step 5.

5. Replace the No. 22 (10A) fuse.

6. Turn the ignition switch OFF.

7. Disconnect the battery negative cable, and wait for 3 minutes.

8. Disconnect SRS unit connector A (28P) from the SRS unit (see step 7 on page 23-23).

9. Reconnect the battery negative cable.

10. Turn the ignition switch ON (II), and wait for 30 seconds. Then turn the ignition switch OFF.

11. Check the No. 22 (10A) fuse.

    Is the fuse OK?

    YES—Short to ground in the SRS unit; replace the SRS unit (see page 23-143).■

    NO—Short to ground in the dashboard wire harness or in the under-dash fuse/relay box No. 22 (10A) fuse line; replace the dashboard wire harness. If the problem is still there, replace the under-dash fuse/relay box.■

12. Turn the ignition switch OFF. Disconnect the battery negative cable, and wait for 3 minutes.

13. Disconnect SRS unit connector A (28P) from the SRS unit (see step 7 on page 23-23).

14. Reconnect the battery negative cable.

15. Connect a voltmeter between the No. 18 terminal of SRS unit connector A (28P) and body ground. Turn the ignition switch ON (II), and measure voltage. There should be battery voltage.

SRS UNIT CONNECTOR A (28P)

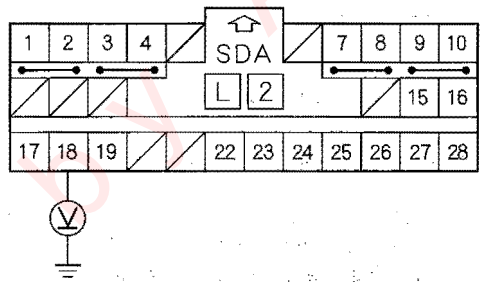

Wire side of female terminals

Is there battery voltage?

YES—Faulty SRS unit or poor contact at SRS unit connector A (28P) and the SRS unit; check the connection. If the connection is OK, replace the SRS unit (see page 23-143).■

NO—Go to step 16.

16. Turn the ignition switch OFF.

17. Disconnect under-dash fuse/relay box connector S (2P).

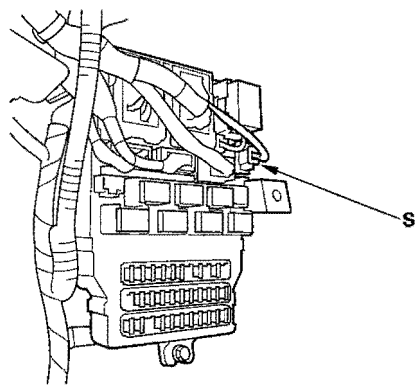

(cont'd)

Protected by AP

DTC Troubleshooting (cont'd)

18. Check resistance between the No. 2 terminal of under-dash fuse/relay box connector S (2P) and the No. 18 terminal of SRS unit connector A (28P). There should be 0 — 1.0 Ω.

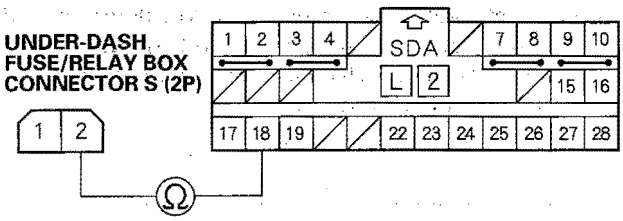

Wire side of female terminals

Is the resistance as specified?

YES — Open in the under-dash fuse/relay box or poor contact between connector S (2P) and the under-dash fuse/relay box; check the connection. If the connection is OK, replace the under-dash fuse/relay box. ■

NO — Open in the dashboard wire harness; replace the dashboard wire harness. ■

Protected by AR

Symptom Troubleshooting

SRS indicator does not come on

NOTE: Perform the gauge self test before beginning troubleshooting (see page 22-262).

1. Turn the ignition switch ON (II), and see if the other indicators come on (brake system, etc.).

   Do the other indicators come on?

   YES—Go to step 2.

   NO—Go to step 9.

2. Turn the ignition switch OFF, then remove the gauge control module (see page 22-265). Disconnect gauge control module connectors A and B from the gauge control module.

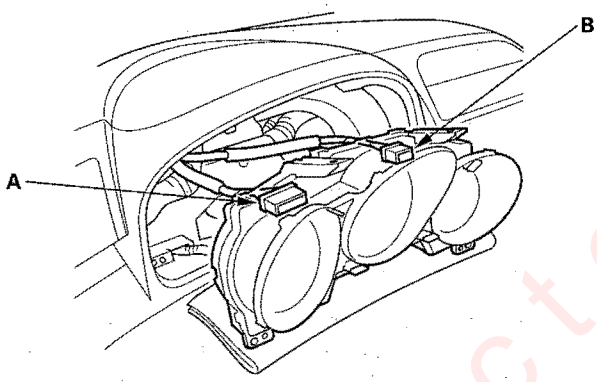

3. Check resistance between the No. 1 terminal of gauge control module connector B (18P) and body ground. There should be 0—1.0 Ω.

GAUGE CONTROL MODULE CONNECTOR B (18P)

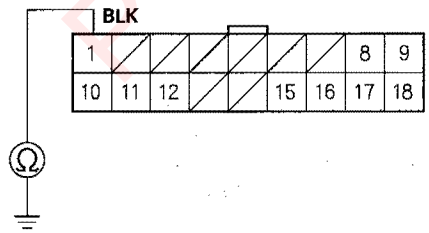

Wire side of female terminals

Is the resistance as specified?

YES—Go to step 4.

NO—Open in the BLK wire of the dashboard wire harness or junction connector, or faulty body ground terminal (G501). If the body ground terminal is OK, replace the dashboard wire harness.■

4. Check for voltage between the No. 20 terminal of gauge control module connector A (30P) and body ground within the first 6 seconds after turning the ignition switch ON (II). There should be less than 1.0 V for at least 6 seconds.

GAUGE CONTROL MODULE CONNECTOR A (30P)

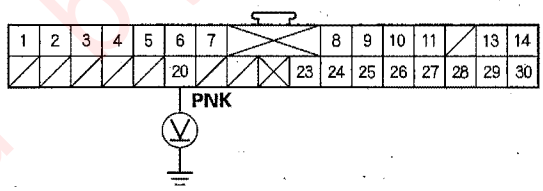

Wire side of female terminals

Is the voltage as specified?

YES—Faulty SRS indicator circuit in the gauge control module; replace the gauge control module.■

NO—Go to step 5.

5. Turn the ignition switch OFF. Disconnect the battery negative cable, and wait for 3 minutes.

6. Disconnect SRS unit connector A (28P) from the SRS unit (see step 7 on page 23-23).

7. Reconnect the battery negative cable.

(cont'd)

Protected by MR

Symptom Troubleshooting (cont'd)

8. Connect a voltmeter between the No. 20 terminal of gauge control module connector A (30P) and body ground. Turn the ignition switch ON (II), and measure voltage. There should be 0.5 V or less.

GAUGE CONTROL MODULE CONNECTOR A (30P)

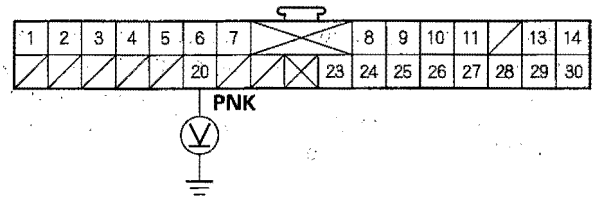

Wire side of female terminals

Is the voltage as specified?

YES—Faulty SRS unit; replace the SRS unit (see page 23-143). ■

NO—Short to power in the PNK wire of the dashboard wire harness or junction connector; replace the dashboard wire harness. ■

9. Turn the ignition switch OFF. Check the No. 21 (7.5A) fuse in the under-dash fuse/relay box.

Is the fuse blown?

YES—Go to step 12.

NO—Go to step 10.

10. Connect a voltmeter between the No. 18 terminal of the gauge control module connector B (18P) and body ground. Turn the ignition switch ON (II), and measure voltage. There should be battery voltage.

GAUGE CONTROL MODULE CONNECTOR B (18P)

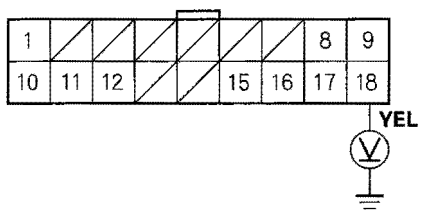

Wire side of female terminals

Is there battery voltage?

YES—Go to step 11. ■

NO—Open in the under-dash fuse/relay box No. 21 (7.5A) fuse circuit, or open in the YEL wire of the dashboard wire harness or junction connector. If the under-dash fuse/relay box is OK, replace the dashboard wire harness. ■

11. Check continuity between the No. 10 terminal of gauge control module connector B (18P) and body ground.

GAUGE CONTROL MODULE CONNECTOR B (18P)

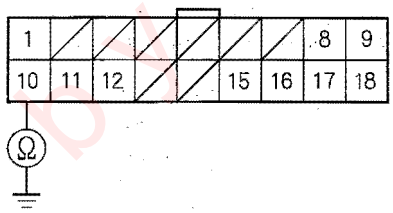

Wire side of female terminals

Is there continuity?

YES—Faulty SRS indicator circuit in the gauge control module or poor contact at gauge control module connector B (18P) and the gauge control module; if the connection is OK, replace the gauge control module. ■

NO—Open in the wire between the gauge control module and ground (G501). If the body ground terminal is OK, repair the open in the wire. ■

12. Replace the No. 21 (7.5A) fuse, then check to see if the indicators comes on.

Do the indicators come on?

YES—The system is OK at this time. ■

NO—Repair the short to ground in the under-dash fuse/relay box No. 21 (7.5A) fuse circuit. ■

Protected by AR

SRS indicator stays on, but no DTCs are stored

NOTE:
- A new SRS unit must sense the entire system is OK before completing its initial self-test. The most common cause of an incomplete self-test is the failure to replace all deployed parts after a collision.
- A battery/system voltage above 15.2 V can cause the SRS indicator to come on without storing any DTCs.

1. Disconnect the battery negative cable, and wait for 3 minutes.

2. Disconnect SRS unit connector A (28P) from the SRS unit (see step 7 on page 23-23).

3. Remove the gauge control module (see page 22-265). Disconnect gauge control module connector A (30P) from the gauge control module.

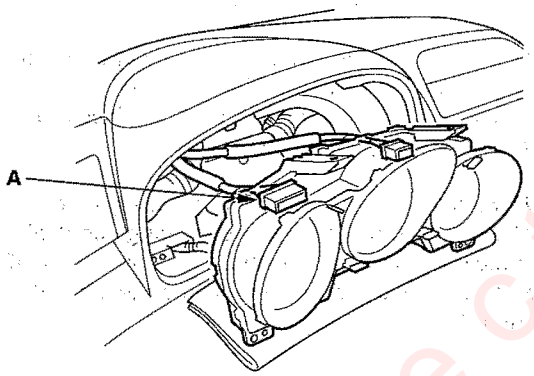

4. Check resistance between the No. 20 terminal of gauge control module connector A (30P) and the No. 19 terminal of SRS unit connector A (28P). There should be 1 Ω or less.

GAUGE CONTROL MODULE CONNECTOR A (30P)

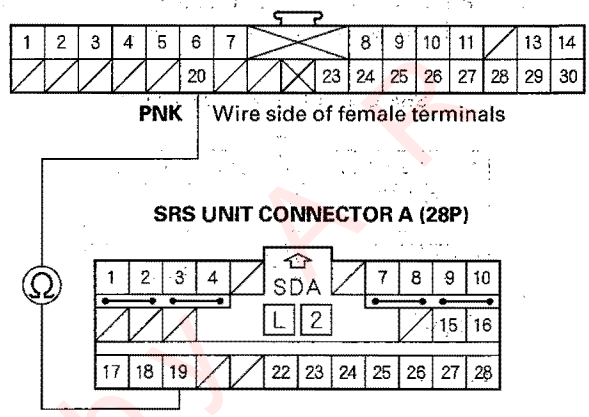

Is the resistance as specified?

YES—Go to step 5.

NO—Open in the dashboard wire harness; replace the dashboard wire harness.■

5. Check resistance between the No. 22 and No. 23 terminals of SRS unit connector A (28P) and body ground. There should be 1 Ω or less.

SRS UNIT CONNECTOR A (28P)

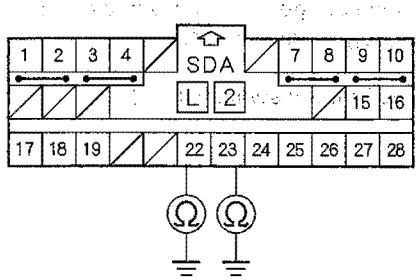

Is the resistance as specified?

YES—Go to step 6.

NO—Open in the wire between SRS connector A (28P) and ground (G505). Inspect G505; if it is OK, replace the dashboard wire harness.■

(cont'd)

Protected by

Symptom Troubleshooting (cont'd)

6. Reconnect the battery negative cable.
7. Turn the ignition switch ON (II).
8. Measure voltage between the No. 17 and No. 18 terminals of the SRS connector A (28P) and body ground. There should be battery voltage.

SRS UNIT CONNECTOR A (28P)

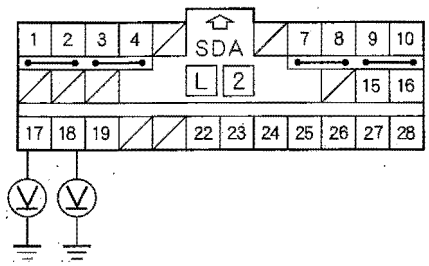

Wire side of female terminals

Is the voltage as specified?

YES—Go to step 9.

NO—Open in the wire between SRS unit connector A (28P) and the under-dash fuse/relay box. Inspect the S (2P) connector at the under-dash fuse/relay box. If the connector is OK, replace the dashboard wire harness.■

9. Turn the ignition switch OFF.
10. Reconnect gauge control module connector A (30P) to the gauge control module.
11. Turn the ignition switch ON (II).
12. Install a jumper wire between the No. 20 terminal of the gauge control module connector A (30P) and the No. 18 terminal of the gauge control module connector B (18P). The SRS indicator should go off.

GAUGE CONTROL MODULE CONNECTOR A (30P)

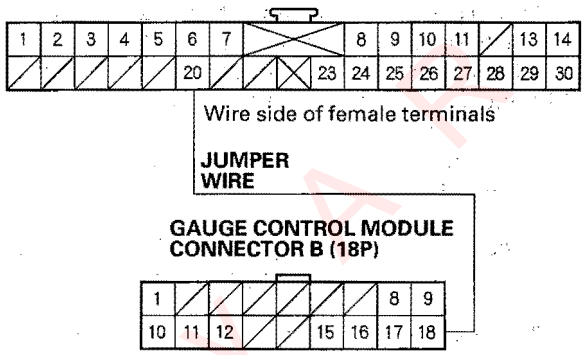

Does the SRS indicator go off?

YES—Faulty SRS unit or poor contact at SRS unit connector A (30P) and the SRS unit; check the connection. If the connection is OK, replace the SRS unit (see page 23-143).■

NO—Faulty SRS indicator circuit in the gauge control module or poor contact at gauge control module connector A or B; check the connection. If the connection is OK, replace the gauge control module.■

Protected by A

Component Replacement/Inspection After Deployment

NOTE: Before doing any SRS repairs, use the HDS SRS menu method to check for DTCs; refer to the DTC Troubleshooting Index for the less obvious deployed parts (seat belt tensioners, front impact sensors, side impact sensors, etc.).

After a collision where the seat belt tensioners deployed, replace these items:
- SRS unit
- Seat belt tensioners
- Front impact sensors

After a collision where the front airbag(s) deployed, replace these items:
- SRS unit
- Deployed airbag(s)
- Seat belt tensioners
- Front impact sensors

After a collision where the side airbag(s) deployed, replace these items:
- SRS unit
- Deployed side airbag(s)
- Side impact sensor(s) (first) for the side(s) that deployed

After a collision where the side curtain airbag(s) deployed, replace these items:
- SRS unit
- Deployed side curtain airbag(s)
- Side impact sensor(s) (first) for the side(s) that deployed
- Side impact sensor(s) (second) for the side(s) that deployed
- Roof trim
- Center pillar upper trim
- Front grab handle
- Any related trim clips

Replace the clips on these parts even if they look undamaged:
- Front pillar trim
- Center pillar trim
- Rear pillar trim
- Front grab handle
- Sunvisor

After a moderate to severe side or rear collision, inspect for any damage on the side curtain airbag or other related components. According to the degree of damage, replace components as needed.

After a collision, where a side curtain airbag has deployed, replace all trim clips on that side, even if they appear to be undamaged.

Front Pillar

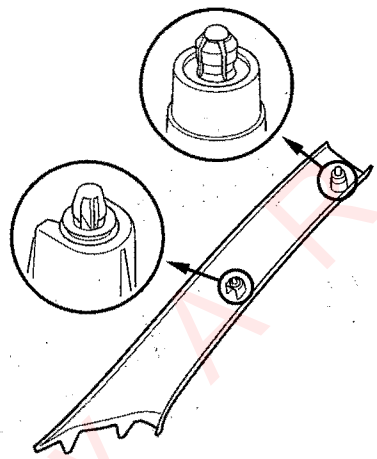

Center Pillar

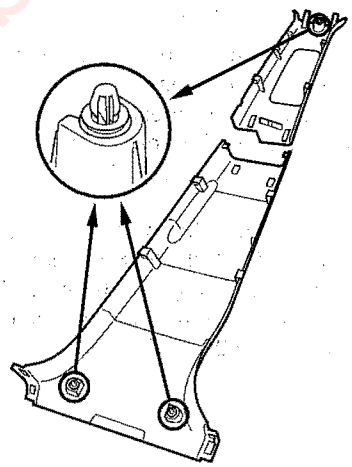

(cont'd)

Protected by AR

Component Replacement/Inspection After Deployment (cont'd)

Rear Pillar

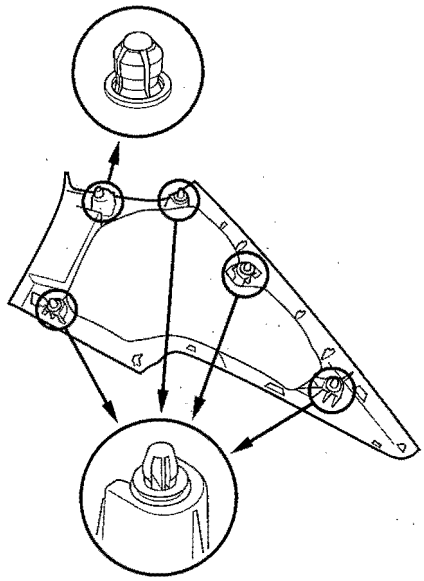

During the repair process, inspect these areas:
- Inspect all the SRS wire harnesses. Replace, don't repair, any damaged harnesses.
- Inspect the cable reel for heat damage. If there is any damage, replace the cable reel.

After the vehicle is completely repaired, turn the ignition switch ON (II). If the SRS indicator comes on for about 6 seconds and then goes off, the SRS is OK. If the indicator does not function properly, use the HDS SRS Menu Method to read the DTC.

Protected by AR

Checking and Adjusting the Headliner/Pillar Trim Overlap

The headliner and pillar trim must overlap less a 15 mm. To check the overlap, do this:

1. Install the headliner (A) and the pillar trims (B).

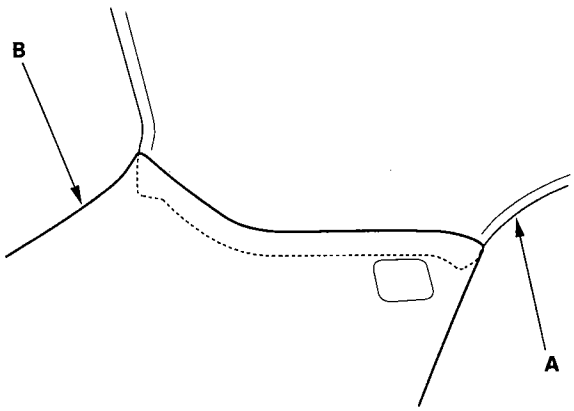

2. Using masking tape on the headliner, mark the upper edge of each pillar trim.

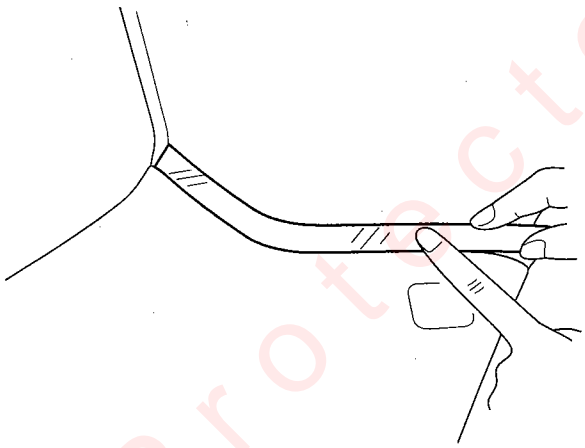

3. Remove the pillar trims, and measure the headliner overlap.
   - If the overlap is less than 15 mm, remove the tape, and install the pillar trims.
   - If the overlap is 15 mm or more, go to step 4.

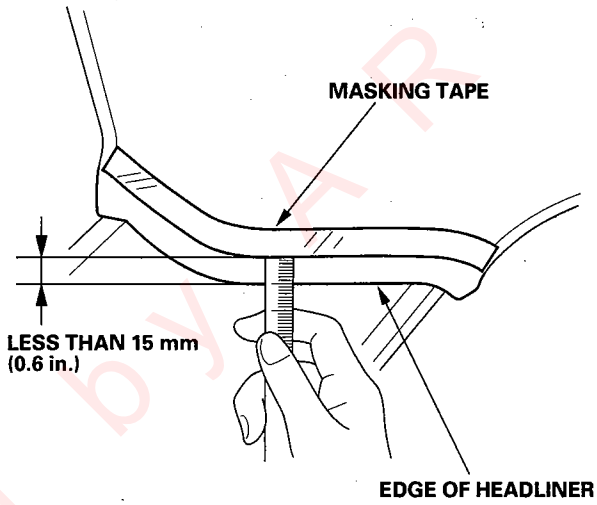

4. Carefully trim the headliner with a utility knife, reducing the overlap to less than 15 mm.

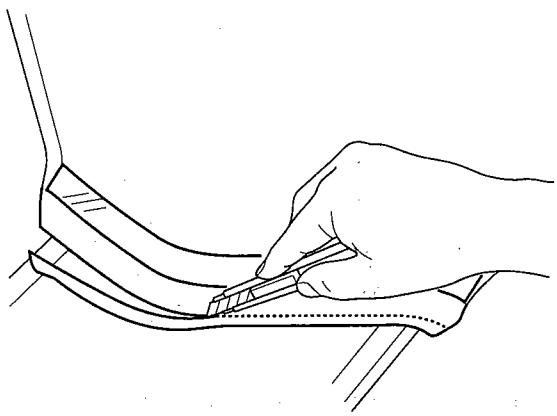

5. Remove the tape, and install the pillar trims.

Protected by A R

Driver's Airbag Replacement

Removal

1. Disconnect the battery negative cable, and wait at least 3 minutes before beginning work.
2. Remove the access panel (A) from the steering wheel, then disconnect the driver's airbag 4P connector (B) from the cable reel.

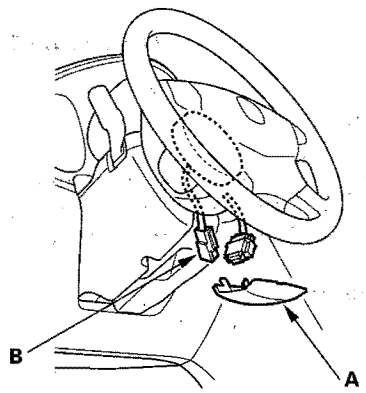

3. Remove the two Torx bolts (A) using a Torx T30 bit.

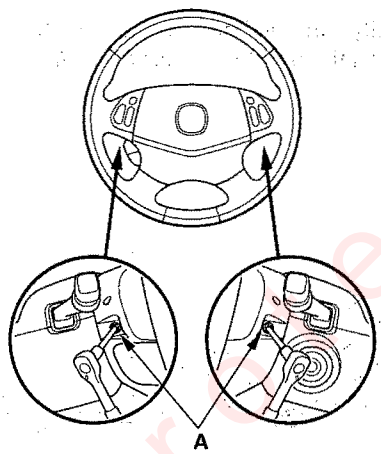

4. Disconnect the horn switch connector (1P), then remove the driver's airbag (B).

Installation

1. Connect the horn switch connector (1P) (A) to the driver's airbag.

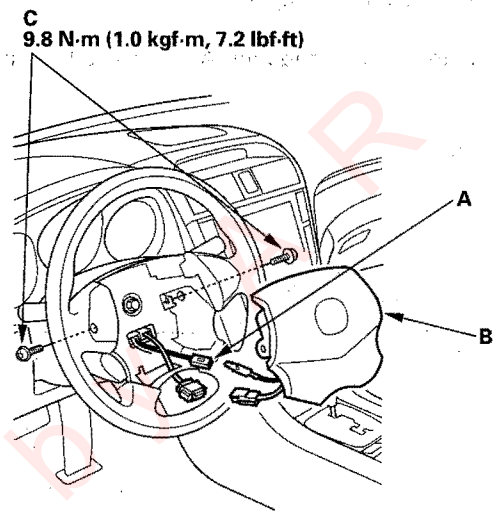

2. Place the driver's airbag (B) in the steering wheel, and secure it with new Torx bolts (C).
3. Connect the cable reel 4P connector (A) to the driver's airbag 4P connector, then install the access panel (B) on the steering wheel.

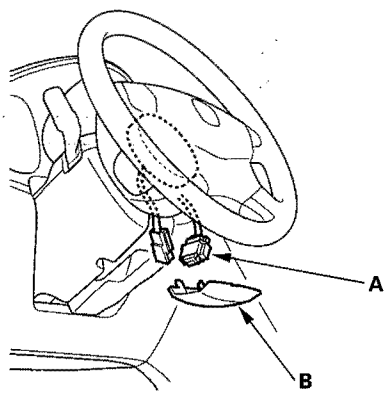

4. Connect the battery negative cable.
5. Connect the HDS and clear the DTCs.
6. After installing the airbag, confirm proper system operation:
   - Turn the ignition switch ON (II); the SRS indicator should come on for about 6 seconds and then go off.
   - Make sure the horn works.

Protected by COPYR

Front Passenger's Airbag Replacement

Removal

NOTE: If the front passenger's airbag has been deployed, refer to the install for after a collision where the front passenger's airbag deployed.

1. Disconnect the battery negative cable and wait at least 3 minutes before beginning work.

2. Remove these items:

   - Glove box housing (see page 20-84)
   - Front passenger's air conditioning duct
   - Passenger's dashboard trim (see page 20-88)

3. Disconnect the front passenger's airbag 4P connector (A) from the dashboard wire harness.

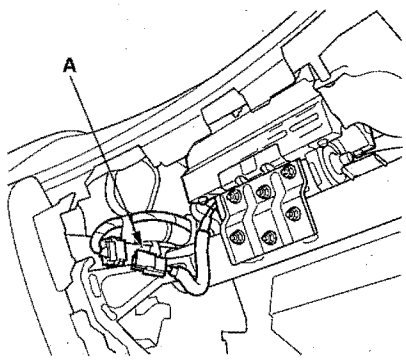

4. Remove the mounting nuts (A) from the bracket. Remove the front passenger's airbag (B).

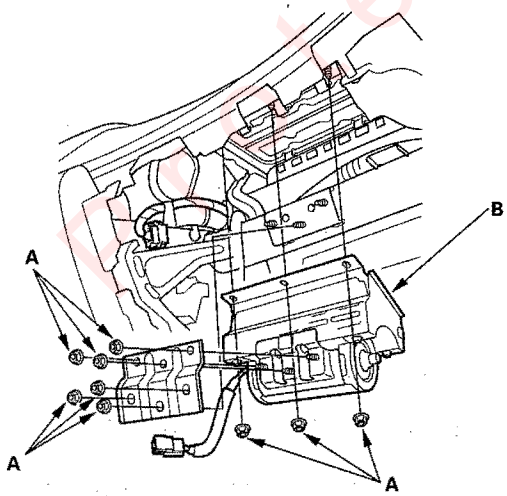

Installation

1. Place the new front passenger's airbag (A) into the bracket. Tighten the front passenger's airbag mounting nuts (B).

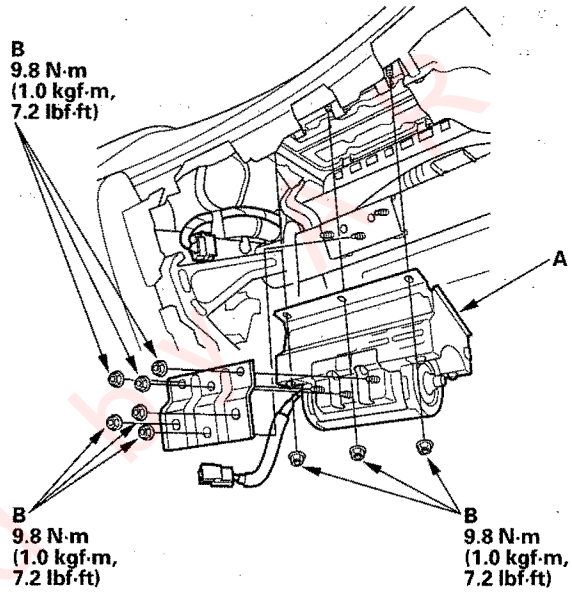

2. Connect the front passenger's airbag 4P connector (A) to the dashboard wire harness, then reinstall the glove box.

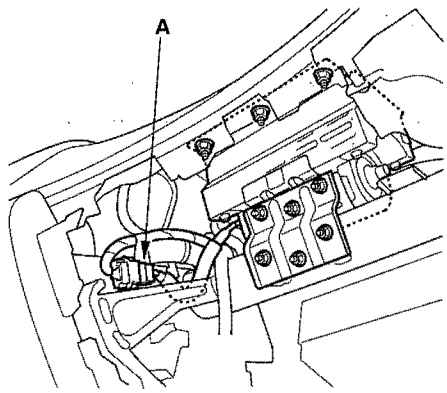

3. Reconnect the battery negative cable.

4. Connect the HDS and clear the DTCs.

5. After installing the airbag, confirm proper system operation: Turn the ignition switch ON (II); the SRS indicator should come on for about 6 seconds and then go off.

(cont'd)

Front Passenger's Airbag Replacement (cont'd)

Installation for after a collision where the front passenger's airbag deployed

1. Disconnect the battery negative cable and wait at least 3 minutes before beginning work.
2. Remove the dashboard assembly out of the vehicle (see page 20-82).
3. Remove the dashboard upper panel from the dashboard (see page 20-83).
4. Install the dashboard upper panel to the dashboard (see page 20-83).
5. With the dashboard upside-down, remove the anti-contamination cover (A) from the new dashboard upper panel.

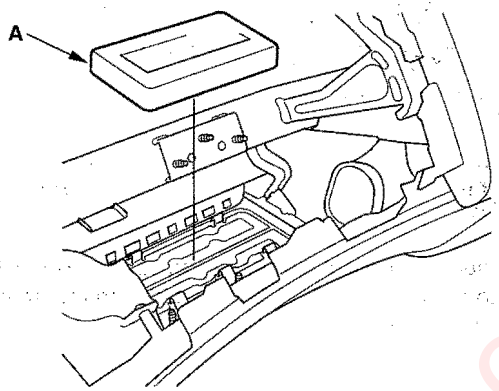

6. Place the new front passenger's airbag into the bracket. Tighten the front passenger's airbag mounting nuts (A).

NOTE:
- Be sure to install the front passenger's airbag so they do not interfere with other parts.
- When you install the front passenger's airbag, be careful not to damage the bag.
- Be sure to keep the new airbag clean and do not unfold or tamper with the cloth cover on the airbag.

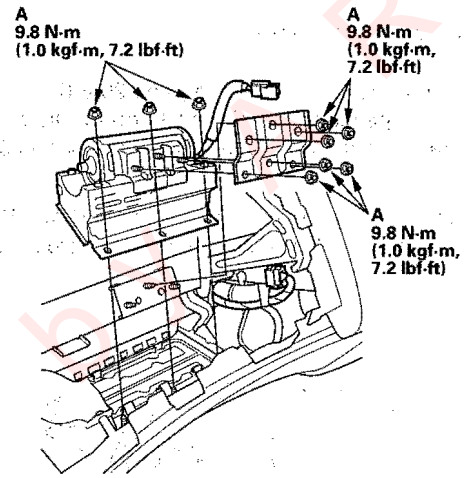

7. Install the dashboard assembly in the vehicle (see page 20-82).
8. Connect the front passenger's airbag 4P connector (A) to the dashboard wire harness, then reinstall the all removed parts in the reverse order that they were removed.

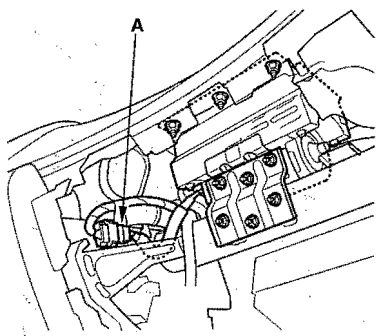

9. Reconnect the battery negative cable.
10. Connect the HDS and clear the DTCs.
11. After installing the airbag, confirm proper system operation: Turn the ignition switch ON (II); the SRS indicator should come on for about 6 seconds and then go off.

Protected by R

Side Airbag Replacement

NOTE: Review the seat replacement procedure in the Body section before doing repairs or service.

Removal

1. Disconnect the battery negative cable, and wait at least 3 minutes before beginning work.

2. Disconnect the side airbag harness 2P connector (A).

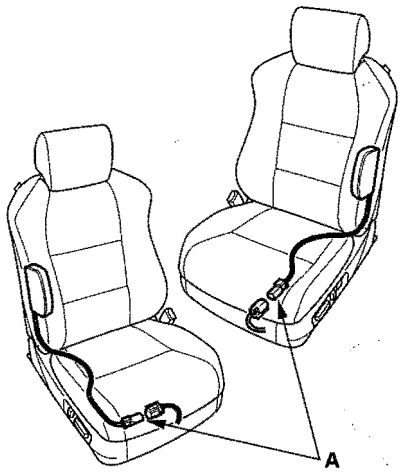

3. Remove the seat assembly (see page 20-99) and seat-back cover (see page 20-107).

4. Remove the mounting nut (A) and the side airbag (B).

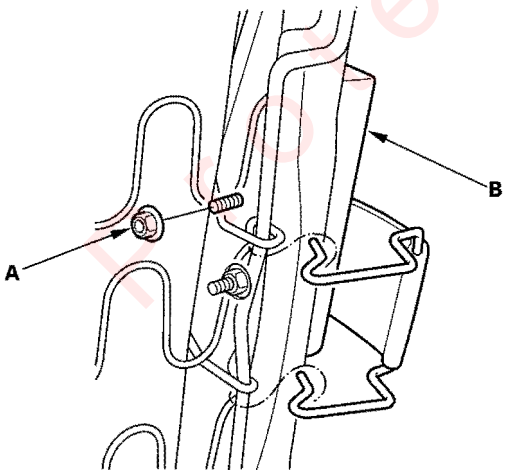

Installation

NOTE:
- If the side airbag lid is secured by a tape, remove the tape.
- Do not open the lid of the side airbag cover.
- Use new mounting nuts tightened to the specified torque.
- Make sure that the seat-back cover is installed properly. Improper installation may prevent proper deployment.
- Be sure to install the harness wires so that they are not pinched or interfering with other parts.

1. Place the new side airbag on the seat-back frame (A). Tighten the side airbag mounting nut (B).

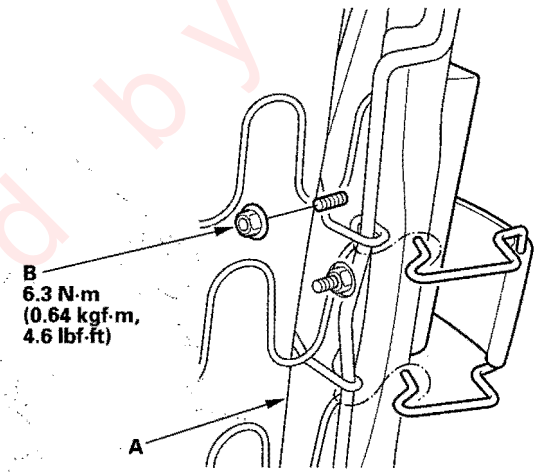

2. Install the seat-back cover in the reverse order of removal (see page 20-107).

3. Install the seat assembly (see page 20-99), then connect the side airbag harness 2P connector.

4. Move the front seat and the seat-back through their full ranges of movement, making sure the harness wires are not pinched or interfering with other parts.

5. Reconnect the battery negative cable.

6. Connect the HDS and clear the DTCs.

7. After installing the side airbag, confirm proper system operation: Turn the ignition switch ON (II); the SRS indicator should come on for about 6 seconds and then go off.

Protected by AP

Side Curtain Airbag Replacement

Removal

NOTE:
- Review the interior trim replacement procedure in the body section before performing repair or service.
- Removal of the side curtain airbag must be performed according to the precautions/procedures described at the beginning of the SRS section.
- The side curtain airbag system consists of the side curtain airbag module, including the roof trim and front grab handle. When the side curtain airbag has been deployed, these parts should be replaced (see page 23-125).

1. Disconnect the battery negative cable, and wait at least 3 minutes before beginning work.
2. Remove the headliner (see page 20-70).
3. For left side curtain airbag replacement, remove the antenna coil (see page 22-424).
4. Disconnect the side curtain airbag 2P connector (A) from the side curtain airbag subharness.

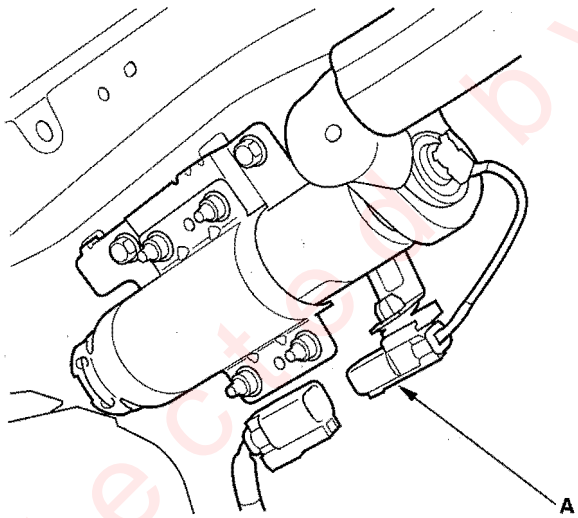

Protected by A R

5. Remove the mounting bolts (A) from the brackets.

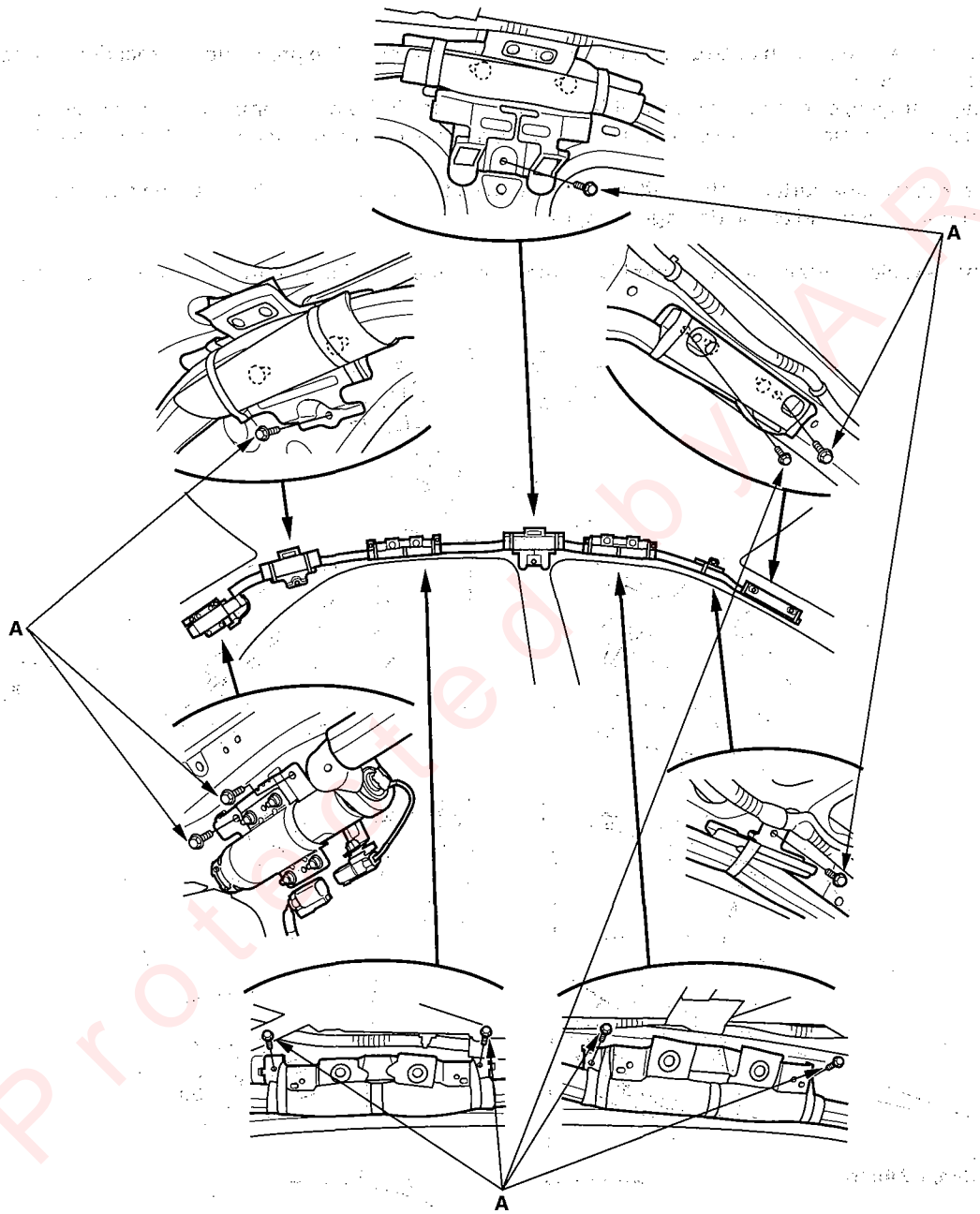

6. Remove the side curtain airbag assembly.

(cont'd)

Protected by AR

Side Curtain Airbag Replacement (cont'd)

Installation

NOTE:
- Installation of the side curtain airbag must be performed according to the precautions/procedures described at the beginning of the SRS.
- If the airbag is frayed, or has only other visible damage, replace it. Do not attempt to repair an airbag.
- When you install the airbag, make sure it is not twisted, and not caught between the inflator bracket by the bracket bolts.
- Make sure that the side curtain airbag inflator retainer is installed properly, otherwise the airbag could cause improper deployment and cause damage or injuries.

1. Place the new side curtain airbag assembly on the side of the roof. Tighten the side curtain airbag mounting bolts (A).

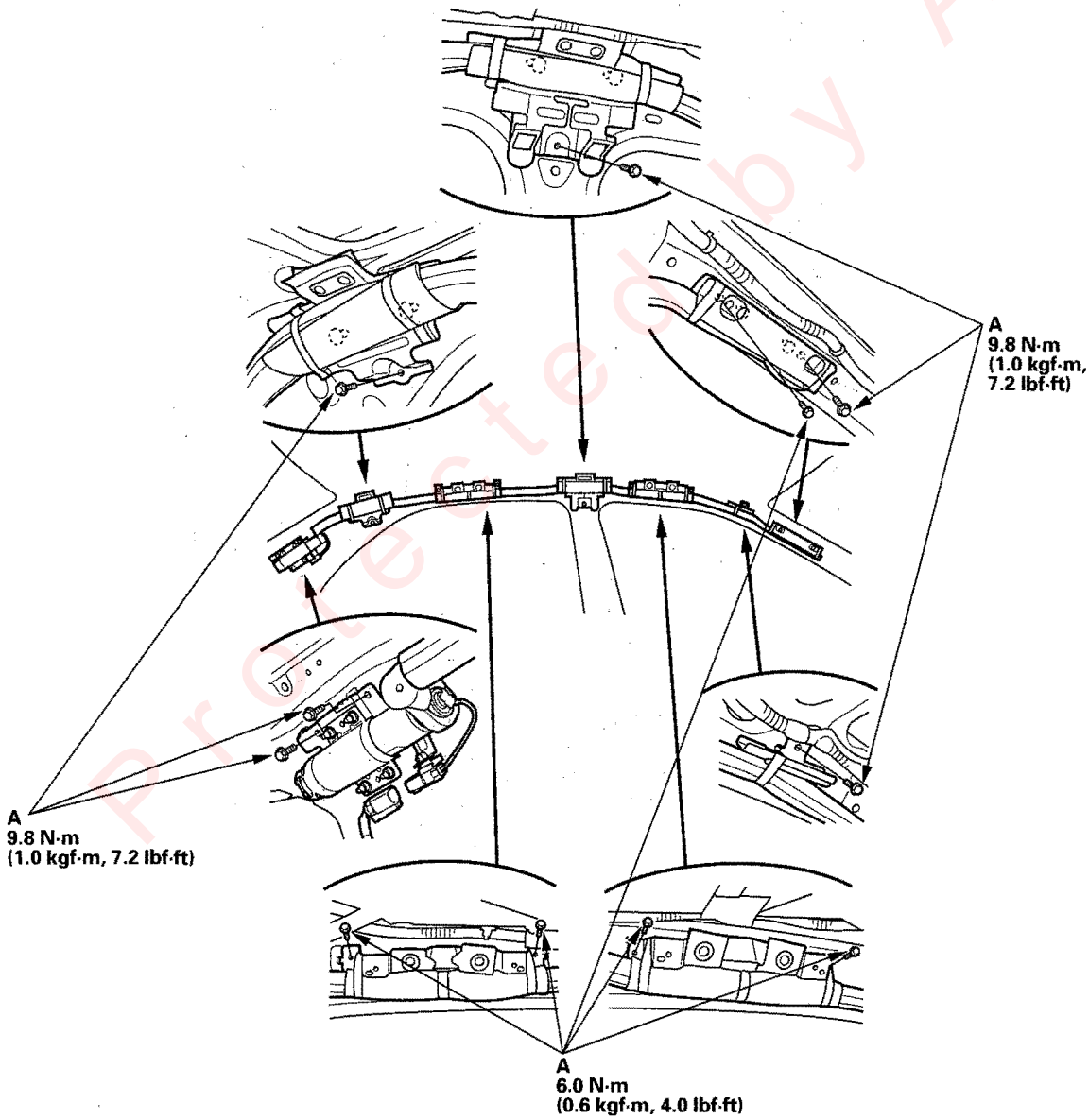

Protected by AR

2. Connect the side curtain airbag 2P connector (A) to the side curtain airbag subharness.

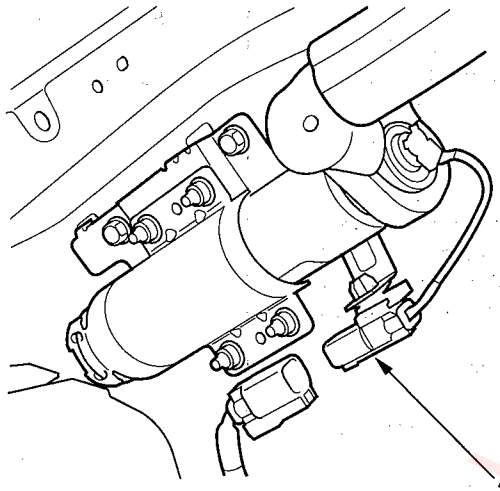

3. Reconnect the battery negative cable.
4. Connect the HDS and clear the DTCs.
5. After installing the side curtain airbag, confirm proper system operation: Turn the ignition switch ON (II); the SRS indicator should come on for about 6 seconds and then go off.
6. Install all removed parts.
7. Confirm proper headliner/pillar trim overlap (see page 23-127).

Protected by AR

Airbag Disposal

Special Tools Required
Deployment tool 07HAZ-SG00500

Before scrapping any airbags, side airbags, side curtain airbags, or seat belt tensioners (including those in a whole vehicle to be scrapped), the part(s) must be deployed. If the vehicle is still within the warranty period, the Acura Parts and Service Manager must give approval and/or special instruction before deploying the part(s). Only after the part(s) have been deployed (as the result of vehicle collision, for example), can they be scrapped. If the parts appear intact (not deployed), treat them with extreme caution. Follow this procedure.

Deploying Airbags in the vehicle

If an SRS equipped vehicle is to be entirely scrapped, its airbags, side airbags, side curtain airbags, and seat belt tensioners should be deployed while still in the vehicle. These parts should not be considered as salvageable parts and should never be installed in another vehicle.

1. Turn the ignition switch OFF, then disconnect the battery negative cable, and wait at least 3 minutes.
2. Confirm that each airbag, side airbag, side curtain airbags, or seat belt tensioner is securely mounted.
3. Confirm that the special tool is functioning properly by following the check procedure on the tool label.

Driver's Airbag

4. Remove the access panel (A) from the steering wheel then disconnect the driver's airbag 4P connector (B) from the cable reel.

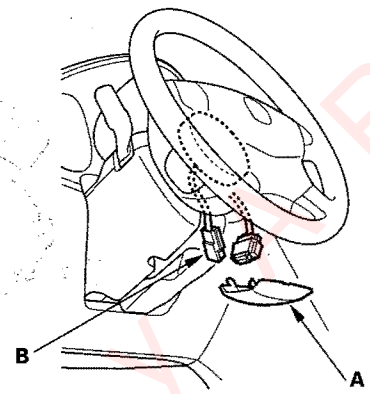

Front Passenger's Airbag

5. Remove the glove box (see page 20-85), and the glove box housing (see page 20-84), then disconnect the front passenger's airbag 4P connector (A) from dashboard wire harness.

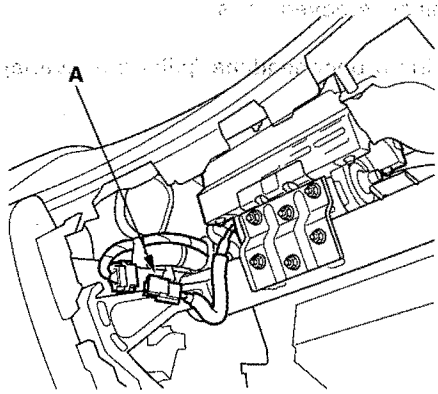

Protected by

Side Airbag

6. Disconnect the side airbag 2P conector (A) from the floor wire harness.

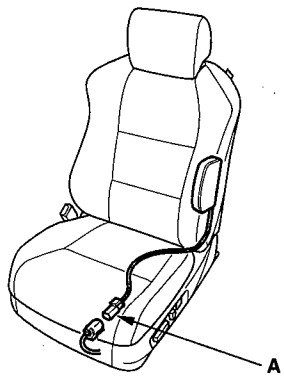

Side curtain airbag

7. Disconnect the side curtain airbag 2P connector (A) from the side curtain airbag subharness.

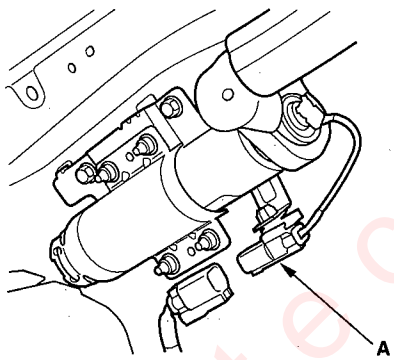

Seat belt tensioner

8. Disconnect the seat belt tensioner 4P connector (A) from the floor wire harness. Pull the seat belt out all the way and cut it.

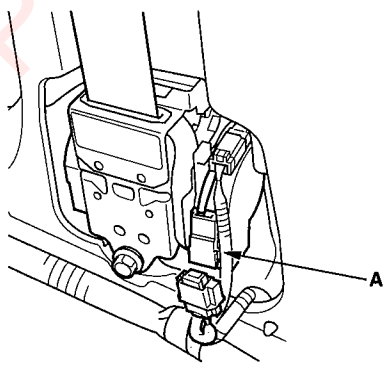

9. Cut off each connector, strip the ends of the wires, and connect the deployment tool alligator clips (A) to the wires. Place the deployment tool at least 30 feet (10 meters) away from the vehicle.

NOTE: The driver's and front passenger's airbags each have four wires, two yellow and two red. Twist together one yellow and one red wire, then twist the other yellow and red wires together, and connect an alligator crip to each pair of wire.

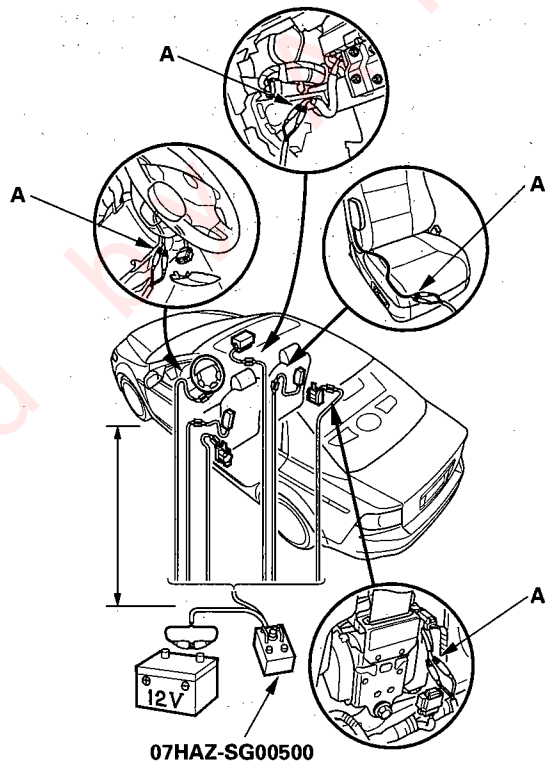

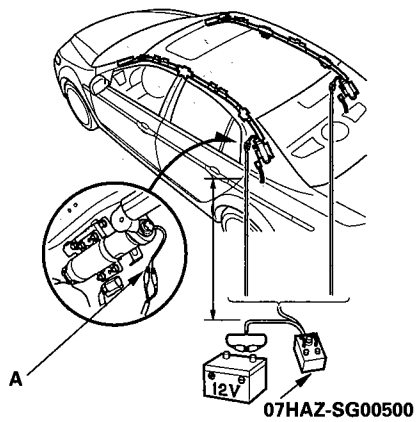

(cont'd)

Protected by

Airbag Disposal (cont'd)

10. Connect a 12 volt battery to the tool.
    - If the green light on the tool comes on, the igniter circuit is defective and cannot deploy the component. Go to Disposal of Damaged Components.
    - If the red light on the tool comes on, the component is ready to be deployed.
11. Push the tool's deployment switch. The airbags and tensioners should deploy (deployment is both highly audible and visible: a loud noise and rapid inflation of the bag, followed by slow deflation).
    - If the components deploy and the green light on the tool comes on, continue with this procedure.
    - If a component doesn't deploy, yet the green light comes ON, its igniter is defective. Go to Disposal of Damaged Components.
    - During deployment the airbags can become hot enough to burn you. Wait 30 minutes after deployment before touching the airbags.
12. Dispose of the complete airbag. No part of it can be reused. Place it in a sturdy plastic bag (A), and seal it securely.

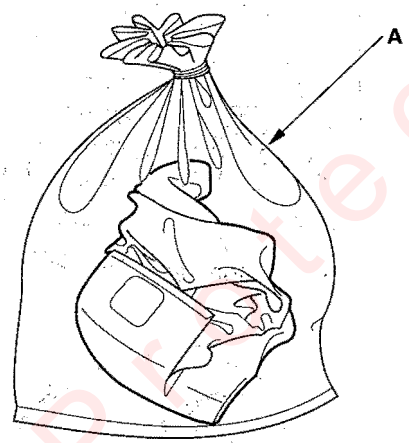

Deploying Components Out of the Vehicle

If an intact airbag or tensioner has been removed from a scrapped vehicle, or has been found defective or damaged during transit, storage, or service, it should be deployed as follows:

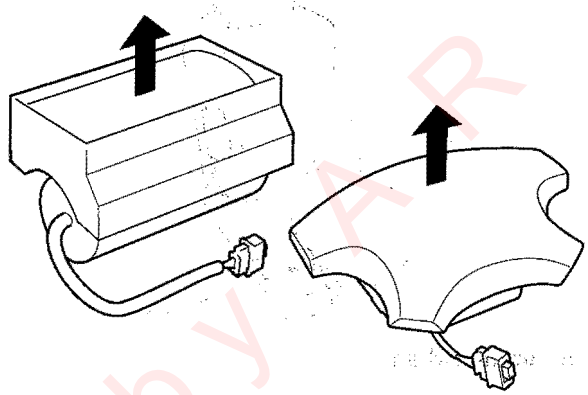

1. Confirm that the special tool is functioning properly by following the check procedure on this page or on the tool label.
2. Position the airbag face up, outdoors, on flat ground, at least 30 feet (10 meters) from any obstacles or people.
3. Follow steps 9 through 12 of the in-vehicle deployment procedure.

   NOTE: The driver's and front passenger's airbags have dual inflators. The like color wires go to the individual inflators.

Protected by AR

Disposal of Damaged Components

1. If installed in a vehicle, follow the removal procedure for the driver's airbag (see page 23-128), front passenger's airbag (see page 23-129), side airbag (see page 23-131), side curtain airbag (see page 23-132), and seat belt tensioner (see page 23-4).

2. In all cases, make a short circuit by cutting, stripping, and twisting together the two inflator wires.

   NOTE: The driver's and front passenger's airbags have dual inflators. The like color wires go to the individual inflators.

3. Package the component in exactly the same packaging that the new replacement part came in.

4. Mark the outside of the box "DAMAGED AIRBAG NOT DEPLOYED", "DAMAGED SIDE AIRBAG NOT DEPLOYED", "DAMAGED SIDE CURTAIN AIRBAG NOT DEPLOYED", "DAMAGED SEAT BELT TENSIONER NOT DEPLOYED" so it does not get confused with your parts stock.

5. Contact your Acura Parts and Service Manager for how and where to return it for disposal.

Deployment Tool Check

1. Connect the yellow clips to both switch protector handles on the tool; connect the tool to a battery.

2. Push the operation switch: green means the tool is OK; red means the tool is faulty.

3. Disconnect the battery and the yellow clips.

Protected by AR

Cable Reel Replacement

Removal

1. Make sure the front wheels are aligned straight ahead.
2. Disconnect the battery negative cable, and wait at least 3 minutes.
3. Remove the driver's airbag (see page 23-128).
4. Disconnect the connector (A) from the cable reel, then remove the steering wheel bolt (B).

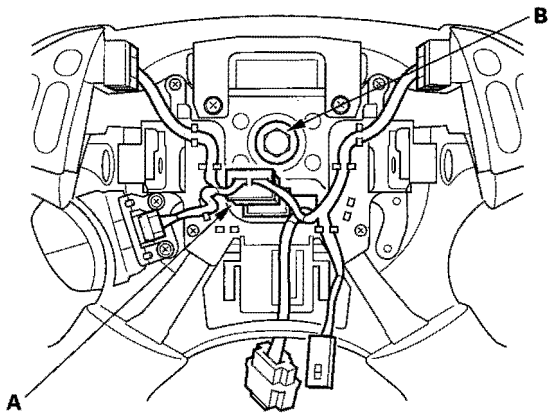

5. Confirm that the front wheels point straight ahead, then remove the steering wheel with a steering wheel puller (see step 5 on page 17-21). Do not tap on the steering wheel or steering column shaft when removing the steering wheel.
6. Carefully guide the driver's airbag connector through the opening in the steering wheel as you remove the steering wheel.
7. Remove the dashboard lower cover (A).

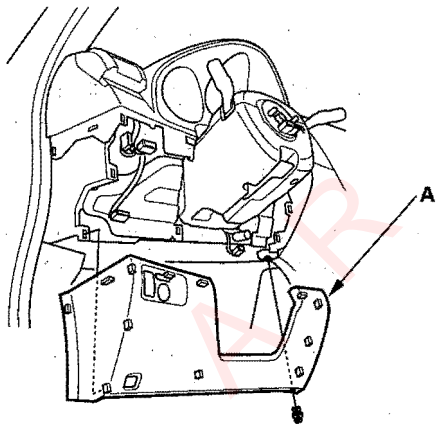

8. Remove the column cover screws (A), then remove the column covers (B, C).

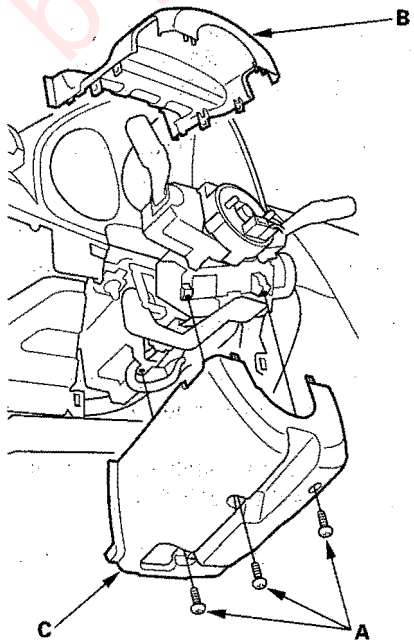

Protected by MR

9. Disconnect the dashboard wire harness 4P connector (A) from the cable reel 4P connector (B), then disconnect the dashboard wire harness 13P connector (C) from the cable reel (D).

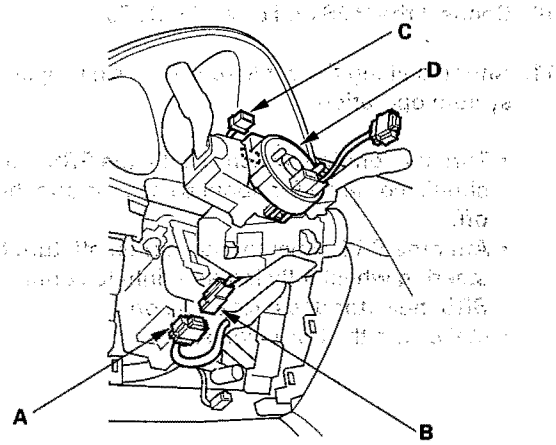

10. Release the lock tab (A) under the cable reel connector with a 90° hook shaped tool (B). Slide the tool below the cable reel connector just above the lock tab. Release the lower lock tab (C), and slide the cable reel off the column.

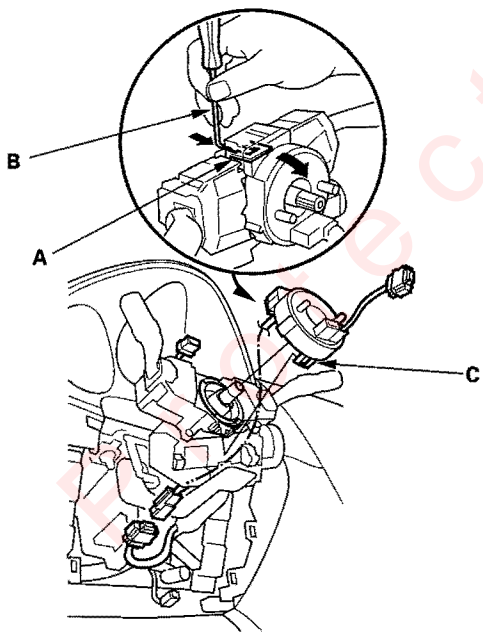

Installation

1. Before installing the steering wheel, align the front wheels straight ahead.
2. If not already done, disconnect the battery negative cable, and wait at least 3 minutes.
3. Set the cancel sleeve (A) so that the projections (B) are aligned vertically.

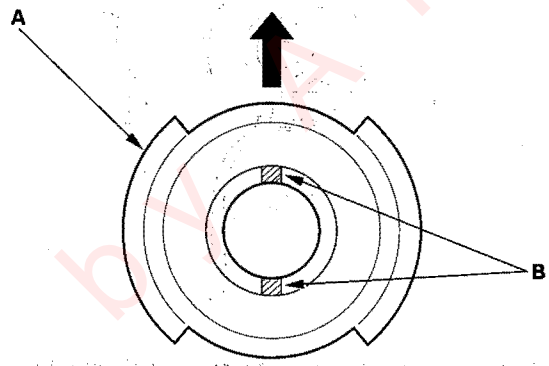

4. Carefully install the cable reel (A) on the steering column shaft. Then connect 13P connector (B) to the cable reel, and connect the 4P connector (C) to the dashboard wire harness 4P connector (D).

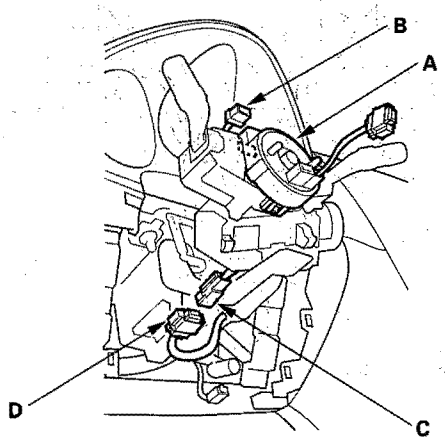

(cont'd)

Protected by A R

Cable Reel Replacement (cont'd)

5. Install the steering column covers.

6. If necessary, center the cable reel (New replacement cable reels come centered.). Do this by first rotating the cable reel clockwise until it stops. Then rotate it counterclockwise (about 3 turns) until the arrow mark (A) on the cable reel label points straight up.

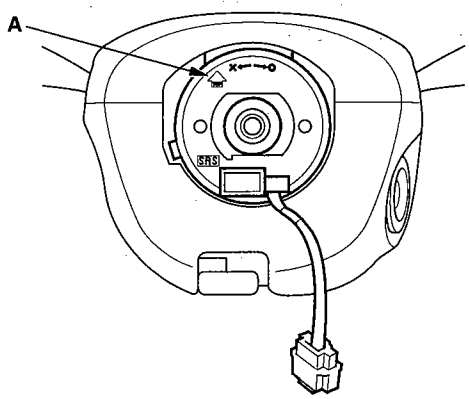

7. Align the projections on the cable reel with the holes on the steering wheel, and install the steering wheel with a new steering wheel bolt (A), then reconnect the connector.

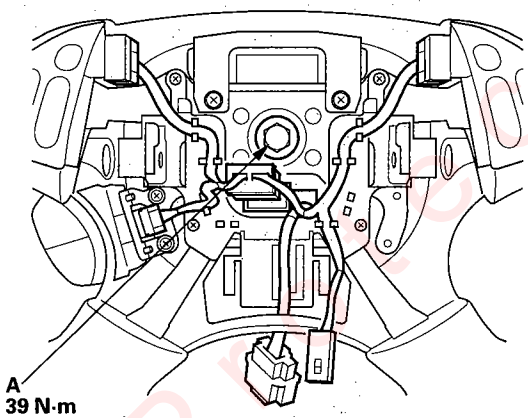

8. Install the driver's airbag (see page 23-128).

9. Reconnect the battery negative cable.

10. Connect the HDS and clear the DTCs.

11. After installing the cable reel, confirm proper system operation:

    - Turn the ignition switch ON (II); the SRS indicator should come on for about 6 seconds and then go off.
    - After the SRS indicator has turned off, turn the steering wheel fully left and right to confirm the SRS indicator does not come on.
    - Make sure the horn works.

Protected by AP

SRS Unit Replacement

Removal

1. Disconnect the battery negative cable, and wait at least 3 minutes before beginning work.
2. Disconnect both seat belt tensioner connectors (see step 6 on page 23-23).
3. Remove the center console rear section (see page 20-77).
4. Remove the center console panel (see page 20-78).
5. Remove the heater ducts.
6. Disconnect the connectors and remove the Torx bolts (A), then pull out the SRS unit.

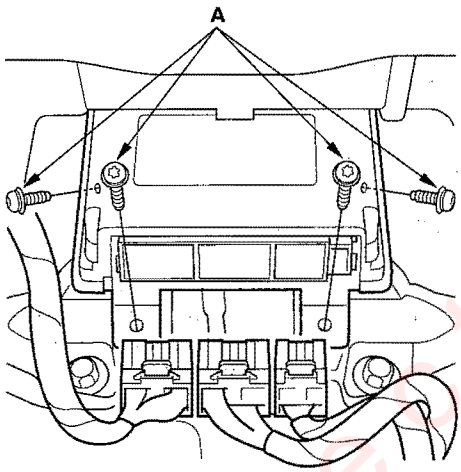

Installation

1. Install the new SRS unit (A) with Torx bolts (B), then connect the connectors (C) to the SRS unit; push them into position until they click.

   NOTE: Be sure the SRS unit is sitting squarely against it's bracket before torquing the Torx bolts.

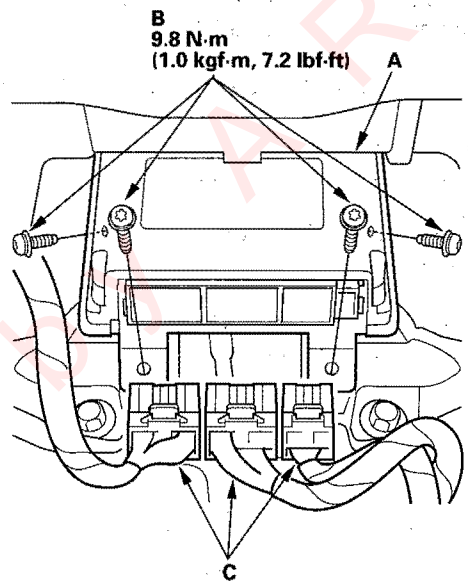

2. Reconnect both seat belt tensioner connectors (see step 6 on page 23-23).
3. Reconnect the battery negative cable.
4. Initialize the OPDS unit (see page 23-26).

   NOTE: This is necessary for registration of serial IDs.

5. After installing the SRS unit, confirm proper system operation: Turn the ignition switch ON (II); the SRS indicator should come on for about 6 seconds and then go off.
6. Install all removed parts.

Protected by AR

Side Impact Sensor (First) Replacement

NOTE: Review the seat replacement procedure in the Body section before doing repairs or service.

Removal

1. Disconnect the battery negative cable, and wait at least 3 minutes before beginning work.
2. Disconnect the appropriate side airbag 2P connector (see page 23-22).
3. Remove the seat assembly (see page 20-99).
4. Remove the front door sill trim and the center pillar lower trim panel (see page 20-62).
5. Disconnect the floor wire harness 2P connector from the side impact sensor (first).
6. Remove the Torx bolts (A) using a Torx T30 bit, then remove the side impact sensor (first) (B).

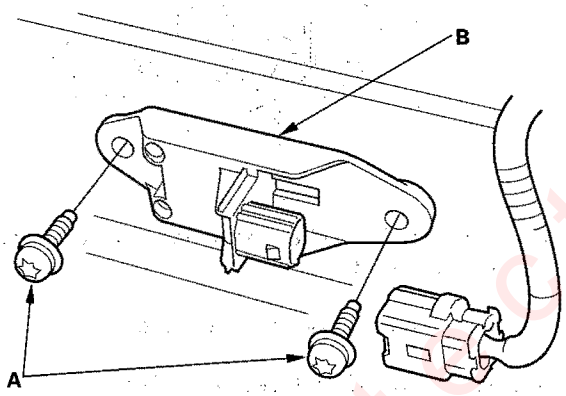

Installation

1. Install the new side impact sensor (first) with Torx bolts (A), then connect the floor wire harness 2P connector (B) to the side impact sensor (first).

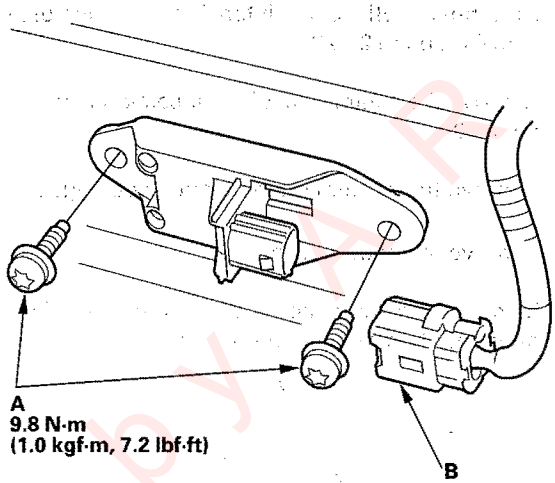

2. Reconnect the battery negative cable.
3. Install all removed parts.
4. After installing the side impact sensor (first), confirm proper system operation: Turn the ignition switch ON (II); the SRS indicator should come on for about 6 seconds and then go off.

Protected by AP

Side Impact Sensor (Second) Replacement

Removal

1. Disconnect the battery negative cable, and wait at least 3 minutes before beginning work.
2. Disconnect the appropriate side curtain airbag 2P connector (see step 4 on page 23-22).
3. Disconnect the side impact sensor (second) 2P connector (A) from the side curtain airbag subharness.

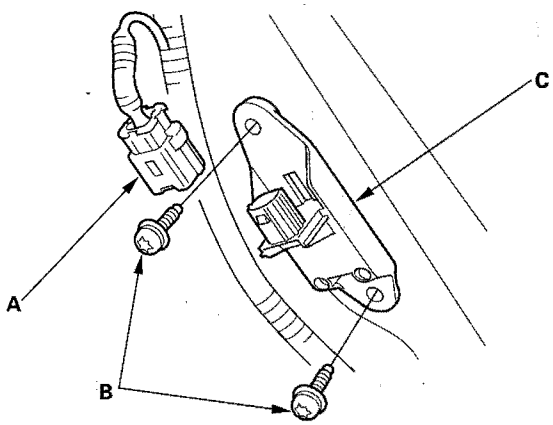

4. Remove the Torx bolts (B) using a Torx T30 bit, then remove the side impact sensor (second) (C).

Installation

1. Install the new side impact sensor (second) (A) with Torx bolts (B) then connect the side curtain airbag subharness 2P connector (C) to the side impact sensor.

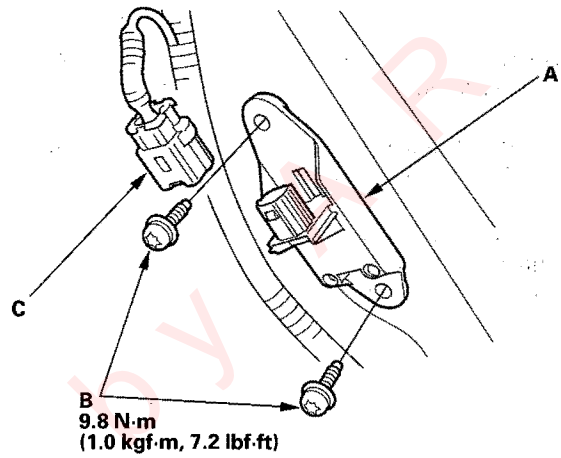

2. Reconnect the battery negative cable.
3. After installing the side impact sensor (second), confirm proper system operation: Turn the ignition switch ON (II): the SRS indicator should come on for about 6 seconds and then go off.
4. Install all removed parts.

Protected by

OPDS Unit Replacement

NOTE: Review the seat replacement procedure in the Body section before doing repairs or service.

Removal

1. Disconnect the battery negative cable, and wait at least 3 minutes before beginning work.
2. Disconnect the passenger's side airbag harness 2P connector (see step 4 on page 23-22).
3. Remove the passenger's seat assembly (see page 20-99) and seat-back cover (see page 20-107).
4. Remove the cover (A), then disconnect the OPDS unit 8P connector D and sensor connectors (B) from the OPDS unit (C).

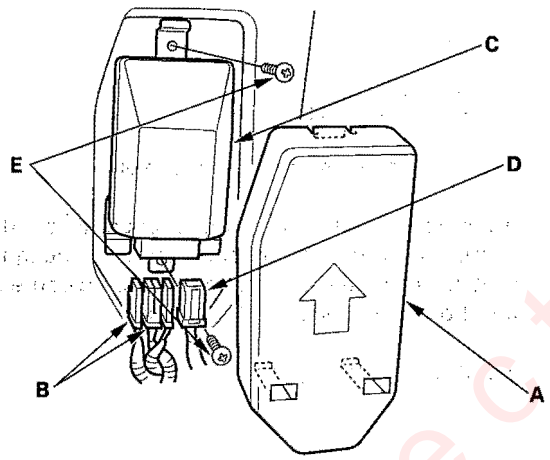

5. Remove the two screws (E) and the OPDS unit.

Installation

1. Place the new OPDS unit (A) on the seat-back frame. Tighten the two screws (B), and connect the OPDS unit 8P connector D and sensor connectors (C) to the OPDS unit. Reinstall the cover (E).

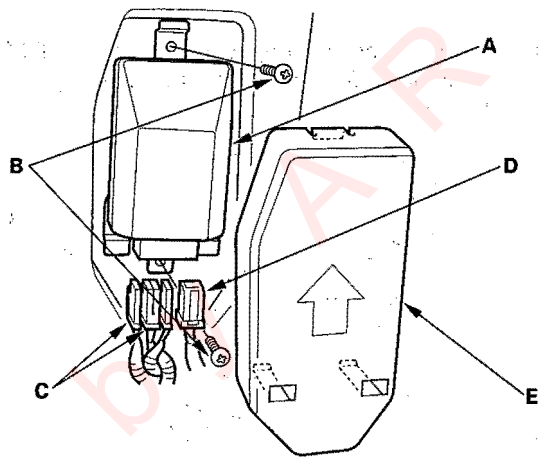

2. Install the seat-back cover in the reverse order of removal.
3. Install the seat assembly (see page 20-99), then connect the side airbag harness 2P connector.
4. Reconnect the battery negative cable.
5. Set the seat-back in a normal position, and make sure there is nothing on the front passenger's seat.
6. Initialize the OPDS unit (see page 23-26).
7. After installing the OPDS unit, confirm proper system operation: Turn the ignition switch ON (II); the SRS indicator should come on for about 6 seconds and then go off.

Protected by AR

Front Impact Sensor Replacement

Removal

1. Disconnect the battery negative cable, and wait at least 3 minutes before beginning work.
2. Disconnect the driver's airbag 4P connector (see step 2 on page 23-22), the front passenger's airbag 4P connector (see step 3 on page 23-22), and both seat belt tensioner 4P connectors (see step 6 on page 23-23).
3. Remove the front inner fender (see page 20-142).
4. On driver's side, loosen the intake resonator rear mounting bolts to gain access to the impact sensor.
5. On the passenger's side, remove the windshield washer reservoir (see page 22-252) to gain access to the impact sensor.
6. Disconnect the engine compartment wire harness 2P connector (A), and remove the two Torx bolts (B) using a Torx T30 bit, then remove the front impact sensor (C).

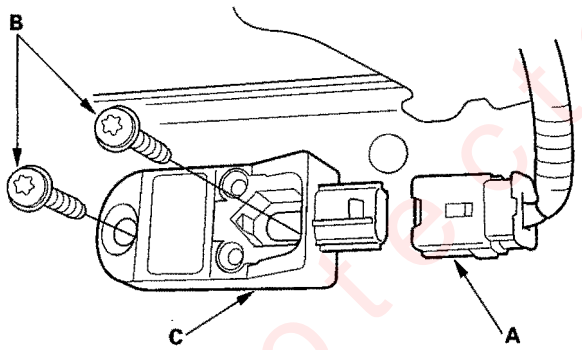

Installation

1. Install the new front impact sensor with new Torx bolts (A), then connect the engine compartment wire harness 2P connector (B) to the front impact sensor (C).

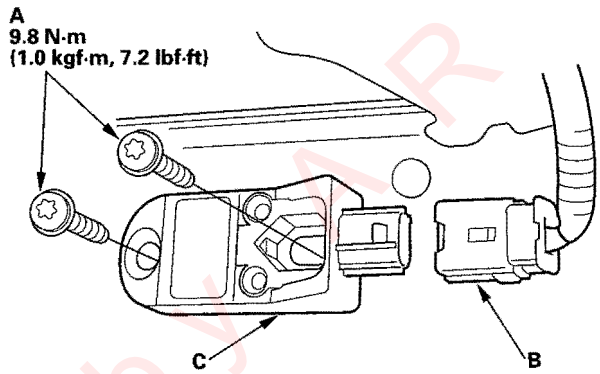

2. Reconnect the driver's airbag 4P connector (see step 2 on page 23-22), the front passenger's airbag 4P connector (see step 3 on page 23-22), and both seat belt tensioner 4P connectors (see step 6 on page 23-23).
3. Reconnect the battery negative cable.
4. After installing the front impact sensor, confirm proper system operation: Turn the ignition switch ON (II): the SRS indicator should come on for about 6 seconds and then go off.
5. Install all removed parts.

Protected by MR

Service Manual Index

NOTE: Refer to the following list to look up DTCs, symptoms, fuses, connectors, wire harnesses, specifications, maintenance schedules, and general service information:

DTC Troubleshooting Indexes
Automatic Climate Control 21-13
Automatic Transaxle 14-8
Communication 22-83
Fuel and Emissions 11-8
SRS 23-27
VSA System Components 19-46

Symptom Troubleshooting Indexes
Audio/Entertainment 22-400
Automatic Climate Control 21-14
Automatic Transaxle 14-10
Charging System 4-23
Cruise Control System 4-40
Fan Controls 10-12
Fuel and Emissions 11-11
Lubrication System 8-4
Moonroof/Sunroof 20-50
Navigation 22-460
SRS 23-30
Starting System 4-4
Steering 17-4
VSA System Components 19-47

Fuse/Relay Indexes
Power Distribution 22-67
Under-dash Fuse/Relay Box 22-66
Under-hood Fuse/Relay Box 22-64
Under-hood Multi-relay Box 22-65

Connector and Wire Harness Indexes
Component Connectors (to harness) 22-14
Grounds (to components) 22-70
In-line Connectors (to harness) 22-13

Specifications section ..... Section 2

Maintenance section ..... Section 3

General Information section ..... Section 1

A

A/C
Test 21-92

A/C Compressor
Replacement 21-80

A/C Compressor Clutch
Inspection 21-82
Overhaul 21-83

A/C Compressor Clutch Circuit
Troubleshooting 21-59

A/C Compressor Relief Valve
Replacement 21-84

A/C Condenser
Replacement 21-85

A/C Condenser Fan High Speed Circuit
Troubleshooting 21-56

A/C Pressure Switch Circuit
Troubleshooting 21-61

A/C Signal Circuit
Troubleshooting 11-232

A/F (Air Fuel Ratio) Sensor
Replacement 11-165

A/T Assembly
Removal 14-205
Installation 14-217

A/T Clutch Pressure Control Solenoid Valves
Test 14-188, 192
Replacement 14-191, 194

A/T Countershaft Assembly
Description 14-22, 24
Disassembly/Inspection/ Reassembly 14-277

A/T Differential
Component Location Index 14-311
Inspection 14-311

A/T Electronic Control System
Description 14-35

A/T Gear Position Indicator System
Component Location Index 14-237
Circuit Diagram 14-238

A/T Hydraulic Controls
Description 14-48, 52
Test 14-177

A/T Mainshaft Assembly
Disassembly/Inspection/ Reassembly 14-274

A/T Secondary Shaft Assembly
Disassembly/Inspection/ Reassembly 14-281
Inspection 14-282

A/T Shift Cable
Replacement 14-232
Adjustment 14-235

A/T Shift Lever
Description 14-74
Removal 14-228
Installation 14-229
Disassembly/Reassembly 14-231

ABS Indicator Circuit
Troubleshooting 19-85, 86

Accessory Power Socket, Front
Test/Replacement 22-293

Accessory Power Socket, Rear
Test/Replacement 22-294

Accessory Power Sockets
Component Location Index 22-291
Circuit Diagram 22-292

Accumulator Body
Disassembly/Inspection/ Reassembly 14-269

Air Cleaner
Removal/Installation 11-273

Air Cleaner Element
Replacement 11-273

Air Mix Control Motor
Replacement 21-68, 69
Test 21-68, 69

Airbag, Driver's
Replacement 23-128
Repair 23-136

Airbag, Front Passenger's
Replacement 23-129

Alternator
Replacement 4-32
Overhaul 4-34

Alternator FR Signal Circuit
Troubleshooting 11-233

Ambient Light
Replacement 22-210

Antenna
Troubleshooting 22-401

APP (Accelerator Pedal Position) Sensor
Replacement 11-216

ATF
Inspection 14-203
Replacement 14-204

ATF Feed Pipes, End Cover
Replacement 14-256

ATF Pump
Inspection 14-265

ATF Temperature Sensor
Replacement 14-199

Audio Components
Troubleshooting 22-405, 415, 416, 417, 418

Audio Unit
Removal/Installation 22-419

Audio/Entertainment
Component Location Index 22-387
How-to Information 22-390
Circuit Diagram 22-397
Troubleshooting 22-403, 406, 407, 409, 410, 412, 414, 418

Audio-HVAC Display Module
Removal/Installation 22-437

Audio-HVAC Subdisplay Unit
Removal/Installation 22-419

(cont'd)

Protected by AR

Service Manual Index

(cont'd)

Automatic Climate Control
Component Location Index 21-3
Circuit Diagram 21-22

Automatic Dimming Inside Mirror
Replacement 20-35
Circuit Diagram 22-295
Description 22-296
Test/Replacement 22-296

Automatic Transaxle
Description 14-20
Circuit Diagram 14-78
Test 14-174

B

Back-up Light
Replacement 22-192

Back-up Light Switch
Test 13-12

Back-up Lights
Circuit Diagram 22-176

Ball Joint Boots
Replacement 18-18

Ball Joints
Removal 18-9

Battery
Test 22-74

Beverage Holder
Replacement 20-81

Blower Motor
Replacement 21-75

Blower Power Transistor
Test 21-67

Blower Unit
Removal/Installation 21-74

Brake Booster
Test 19-22
Replacement 19-24

Brake Calipers
Overhaul 19-18, 29

Brake Discs
Inspection 19-17, 28

Brake Fluid Level Switch
Test 19-12

Brake Lights
Circuit Diagram 22-177

Brake Lines and Hoses
Inspection 19-37
Replacement 19-38

Brake Master Cylinder
Replacement 19-20
Inspection 19-22

Brake Pads
Inspection/Replacement 19-13, 26

Brake Pedal
Adjustment 19-6
Replacement 19-36

Brake Pedal Position Switch
Test 22-191

Brake Pedal Position Switch Signal Circuit
Troubleshooting 11-237

Brake System Indicator Circuit
Circuit Diagram
Conventional Brake Components 19-11
Troubleshooting
VSA System Components 19-87, 88

Bulb, Front Turn Signal Light
Replacement 22-190

Bulb, HID
Replacement 22-187

Bulkhead Cover, Front
Replacement 20-130

Bumper Strake, Front
Replacement 20-141

Bumper, Front
Removal/Installation 20-118

Bumper, Rear
Removal/Installation 20-120

C

Cable Reel
Replacement 23-140

Camshaft
Replacement 6-33
Inspection 6-39
Installation 6-49

Carpet
Replacement 20-73, 75

Catalytic Converter
Removal/Installation 11-281

Catalytic Converter System
How-to Information 11-51

Center Console
Removal/Installation 20-77

Center Console Hinge
Replacement 20-81

Center Console Rear Cover
Replacement 20-80

Charging System
Component Location Index 4-22
Circuit Diagram 4-24
Troubleshooting 4-25

CKP (Crankshaft Position) Sensor
Replacement 11-168

Climate Control Panel
Removal/Installation 21-73

Climate Control Power and Ground Circuits
Troubleshooting 21-51

Climate Control Unit
How-to Information 21-8
Removal/Installation 21-73

Clock
Circuit Diagram 22-303
Replacement 22-304

Clutch
Component Location Index 12-3
Description 12-4
Replacement 12-12

Clutch Interlock Switch
Test 4-8

Clutch Master Cylinder
Replacement 12-8

Clutch Pedal
Adjustment 12-6
Replacement 12-7

Clutch Pedal Position Switch
Test 4-44

Clutch Slave Cylinder
Replacement 12-10

CMP (Camshaft Position) Sensor
Replacement 11-169

Combination Light Switch
Test/Replacement 22-182

Combination Switch Control Unit
Input Test 22-136

Connecting Rod Bearings
Replacement 7-9

Connecting Rods
Inspection 7-6

Connectors
(See first page of this Index)

Console Light
Replacement 22-210

Console Panel
Removal/Installation 20-78

Control Arms
Replacement 18-37

Control Shaft Bearing
Replacement 14-255

Protected by AR

Control Shaft Oil Seal, End Cover
Replacement 14-255

Control Shaft Oil Seal, Torque Converter Housing
Replacement 14-273

Conventional Brake Components
Component Location Index 19-3
Test/Inspection 19-4
Troubleshooting 19-5
Repair 19-9

Coolant
Inspection 10-6
Replacement 10-6

Cooling System
Component Location Index 10-2

Countershaft Bearing, A/T Housing
Removal/Installation 14-259

Countershaft Bearing, Torque Converter Housing
Replacement 14-272

Countershaft Bearings
Replacement 13-65

Countershaft Reverse Selector Hub
Removal 14-278
Installation 14-279

Cowl Cover
Replacement 20-132

Crankshaft
Removal 7-12
Inspection 7-14
Installation 7-23

Crankshaft Main Bearings
Replacement 7-7

Crankshaft Oil Seal, Pulley End
Installation 7-29

Crankshaft Oil Seal, Transmission End
Installation 7-29

Crankshaft Pulley
Removal/Installation 6-12

Cruise Control Combination Switch
Replacement 4-43
Test/Replacement 4-43

Cruise Control System
Component Location Index 4-38
Circuit Diagram 4-39
Input Test 4-41

Cylinder Head Assembly
Component Location Index 6-3
Inspection 6-6
Removal 6-29
Installation 6-50

Cylinder Head Cover
Removal 6-27
Installation 6-28

Cylinder Head Sealing Bolt
Installation 6-55

Cylinder Head, Bare
Inspection 6-35

D

D Indicator Circuit
Troubleshooting 14-239

Dampers, Front
Replacement 18-24

Dampers, Rear
Replacement 18-42

Dash Lights Brightness Control
Circuit Diagram 22-201

Dash Lights Brightness Controller
Test/Replacement 22-202

Dash Vents
Removal/Installation 20-88

Dashboard
Removal/Installation 20-89

Dashboard Lower Cover
Removal/Installation 20-82

Dashboard Trim
Removal/Installation 20-88

Dashboard Under Cover
Removal/Installation 20-83, 84

Dashboard Upper Panel
Removal/Installation 20-83, 96

Differential Carrier Bearing Outer Races, A/T
Replacement 14-314

Differential Carrier Bearing Outer Races, M/T
Replacement 13-82

Differential Carrier Bearings, A/T
Replacement 14-312
Inspection 14-315

Differential Carrier Bearings, M/T
Replacement 13-80
Adjustment 13-83

Differential Oil Seals, A/T
Replacement 14-313

Differential Oil Seals, M/T
Replacement 13-81

DLC Circuit
Troubleshooting 11-160

Door Courtesy Light
Replacement 22-208

Door Glass
Replacement 20-13, 23
Adjustment 20-30

Door Glass Weatherstrips
Replacement
Front Doors 20-15
Rear Doors 20-27

Door Key Cylinder Switches
Test 22-159

Door Latches
Replacement
Front Doors 20-12
Rear Doors 20-22

Door Lock Actuators
Test 22-157

Door Lock Knob Switches
Test 22-158

Door Lock Switches
Test 22-159

Door Moldings
Replacement
Front Doors 20-16
Rear Doors 20-28

Door Outer Handles
Replacement
Front Doors 20-9
Rear Doors 20-20

Door Panels
Removal/Installation
Front Doors 20-7
Rear Doors 20-17

Door Sash Trim
Replacement
Front Doors 20-14, 15
Rear Doors 20-25, 26

Door Strikers
Adjustment 20-32

Door Weatherstrips
Replacement
Front Doors 20-17
Rear Doors 20-29

Drive Belt
Inspection 4-29
Replacement 4-29

Drive Belt Auto-tensioner
Inspection 4-30
Replacement 4-31

Drive Plate
Removal/Installation 14-216

Driving Position Memory Switch
Test/Replacement 22-385

(cont'd)

Protected by AR

Service Manual Index

(cont'd)

Driving Position Memory System
Component Location Index 22-327
Description 22-329
Circuit Diagram 22-330, 334
How-to Information 22-336
Test 22-339

DTCs
(See first page of this Index)

Dust and Pollen Filter
Replacement 21-74

Dynamic Damper, Driveshafts
Replacement 16-10

E

ECM
Replacement 11-171

ECT Sensor
Replacement 11-167

EGR System
Component Location Index 11-283

EGR Valve
Replacement 11-295

Electronic Throttle Control System
Component Location Index 11-172

Emblems
Replacement 20-140

End Cover, A/T
Removal 14-252
Installation 14-303

Engine Assembly
Removal 5-2
Installation 5-12

Engine Block Assembly
Component Location Index 7-3

Engine Block Drain Bolt
Installation 7-30

Engine Block, Bare
Inspection 7-15
Repair 7-17

Engine Mount Control System
Component Location Index 4-45
Circuit Diagram 4-46
Troubleshooting 4-47

Engine Mounts
Replacement 5-23

Entry Light Control System
Component Location Index 22-212
Circuit Diagram 22-213

EVAP Canister
Replacement 11-324

EVAP Canister Purge Valve
Replacement 11-325

EVAP Canister Vent Shut Valve
Replacement 11-326

EVAP Control System
Component Location Index 11-298

Evaporator Core
Replacement 21-75

Evaporator Temperature Sensor
Replacement 21-66
Test 21-66

Exhaust Pipe
Replacement 9-6

F

Fan Controls
Component Location Index 10-11
Circuit Diagram 10-13

Fender Fairing, Front
Replacement 20-144

Fender Trim
Replacement 20-131

Final Driven Gear, A/T
Replacement 14-312

Final Driven Gear, M/T
Replacement 13-80

Frame
Repair Chart 20-158

Frame Stiffener
Replacement 20-155

Front Doors
Component Location Index 20-3
Adjustment 20-31

Front Driveshaft Assembly
Component Location Index 16-3
Inspection 16-4
Removal 16-4
Disassembly 16-6
Resassembly 16-11
Installation 16-18

Front Fog Lights
Circuit Diagram 22-172

Front Impact Sensors
Replacement 23-147

Front Seats
Component Location Index ... 20-98, 22-318
Circuit Diagram 22-319

Front Speakers
Replacement 22-421

Front Suspension
Component Location Index 18-3

Fuel and Emissions
Description 11-13

Fuel Fill Door
Adjustment 20-128

Fuel Fill Door Opener
Replacement 20-153

Fuel Fill Door Opener Cable
Replacement 20-149

Fuel Filter
Replacement 11-256

Fuel Gauge Sending Unit
Test 11-262

Fuel Injection System (PGM-FI)
Component Location Index 11-54

Fuel Lines and Hoses
Inspection 11-249
Removal 11-252
Installation 11-253

Fuel Pipe Protector
Replacement 20-144

Fuel Pressure Regulator
Replacement 11-256

Fuel Pump
Replacement 11-257

Fuel Supply System
Component Location Index 11-240
Adjustment 11-245
Test 11-247

Fuel Tank
Repair 11-248
Replacement 11-258

Fuel Tank Pressure Sensor
Replacement 11-325

Fuses
(See first page of this Index)

G

Gauge Control Module
How-to Information
Gauges 22-265
Multiplex Control System 22-115
Input Test
Multiplex Control System 22-134
Replacement
Gauges 22-265

Gauges
Component Location Index 22-254
Circuit Diagram 22-256
How-to Information 22-262

Protected by CARFAX

General Information
(See section 1)

Glove Box
Removal/Installation 20-84, 85

Glove Box Damper
Replacement 20-87

Glove Box Light
Test/Replacement 22-208

Glove Box Lock Cylinder
Replacement 20-85

GPS Antenna
Removal/Installation 22-534

Grille
Replacement 20-129

Grille Lower Molding
Replacement 20-130

H

HandsFreeLink Control Unit
Component Location Index 22-439
How-to Information 22-440
Input Test 22-445

HandsFreeLink System
Circuit Diagram 22-443

Hazard Warning Switch
Test 22-200

Headlight
Replacement 22-184
Adjustment 22-185

Headlights
Circuit Diagram 22-170, 173
Troubleshooting 22-186

Headliner
Removal/Installation 20-70

Heater Unit
Replacement 21-76

Heater Valve Cable
Adjustment 21-79

Heating/Ventilation
Description 21-15

HFL-Voice Control Switch
Test/Replacement 22-451

HID Unit
Replacement 22-188

High Mount Brake Light
Replacement 22-194

High/Low Switching Solenoid
Test 22-189

Homelink Remote Control System
Circuit Diagram 22-218
Test 22-218

Hood
Adjustment 20-122

Hood Insulator
Replacement 20-124

Hood Latch
Replacement 20-152

Hood Moldings
Replacement 20-129

Hood Opener Cable
Component Location Index 20-147
Replacement 20-148

Hood Release Handle
Replacement 20-153

Hood Seal
Replacement 20-124

Hood Support Struts
Replacement 20-123

Hood Switch
Test 22-161

Horn
Test/Replacement 22-165

Horn Switch
Test 22-166

Horns
Component Location Index 22-164
Circuit Diagram 22-165

HO2S, Secondary
Replacement 11-166

I

IAT (Intake Air Temperature) Sensor
Replacement 11-167

Idle Control System
Component Location Index 11-228
Inspection 11-238

Ignition Coil Relay Circuit
Troubleshooting 4-20

Ignition Coil(s)
Removal/Installation 4-19

Ignition Key Light
Test 22-217

Ignition Key Switch
Test 22-217

Ignition Switch
Test 22-77

Ignition System
Component Location Index 4-16
Circuit Diagram 4-17
Inspection 4-18

Immobilizer Control Unit-Receiver
Replacement 22-326

Immobilizer System
Component Location Index 22-322
Description 22-323
Circuit Diagram 22-324
Troubleshooting 22-325

IMT (Intake Manifold Tuning) Actuator
Replacement 11-274

In-car Temperature Sensor
Replacement 21-63
Test 21-63

Injectors
Replacement 11-163

Inner Fender, Front
Replacement 20-142

Inner Fender, Rear
Replacement 20-145

Instrument Panel
Removal/Installation 20-82

Intake Air System
Component Location Index 11-264

Intake Manifold
Removal/Installation 9-2

Interior Lights Switch
Test/Replacement 22-206

Interlock System
Description 14-76
Component Location Index 14-244
Circuit Diagram 14-245

Intermediate Shaft Assembly
Removal 16-21
Disassembly 16-22
Resassembly 16-24
Installation 16-29

Intput Shaft (Mainshaft) Speed Sensor
Replacement
A/T Electronic Control System 14-195
Fuel Injection System (PGM-FI) 11-170

K

Key Interlock Solenoid
Test 14-249

Key Interlock System Circuit
Troubleshooting 14-248

Keyless Buzzer
Test/Replacement 22-160

(cont'd)

Protected by MAR

Service Manual Index

(cont'd)

Keyless Entry Transmitter
Test 22-162
Repair 22-163

Keyless Entry/Security Alarm System
Component Location Index 22-138
Description 22-140
Circuit Diagram 22-142

Keyless Receiver Unit
Input Test 22-156

Knock Sensor
Replacement 11-168

Knuckle Bushings
Replacement 18-41

Knuckles
Replacement
Front Suspension 18-11
Rear Suspension 18-29

L

Leading Arms
Replacement 18-38

License Plate Light
Replacement 22-192

License Trim
Replacement 20-138

Lights, Exterior
Component Location Index 22-167

Lights, Interior
Component Location Index 22-203
Circuit Diagram 22-204

Lights-on Reminder
Circuit Diagram 22-277

Low Fuel Indicator
Test 11-263

Lower Arms
Removal/Installation
Front Suspension 18-20
Replacement
Rear Suspension 18-36

LSD (Limited Slip Differential)
Inspection 13-79

Lubrication System
Component Location Index 8-3
Test 8-5

Lumbar Support
Replacement 20-105
Component Location Index 22-315
Circuit Diagram 22-316

Lumbar Support Motor
Test 22-317

Lumbar Support Switch
Test/Replacement 22-317

M

M/T Assembly
Removal 13-13
Installation 13-22
Disassembly 13-32
Resassembly 13-69

M/T Countershaft Assembly
Inspection 13-53, 55
Disassembly 13-54
Resassembly 13-56

M/T Differential
Component Location Index 13-78

M/T Mainshaft Assembly
Inspection 13-44, 48
Disassembly 13-47
Resassembly 13-49
Adjustment 13-66

M/T Reverse Idler Gear Shaft Assembly
Disassembly/Reassembly 13-62

M/T Reverse Lockout System
Component Location Index 13-4
Description 13-5
Circuit Diagram 13-6
Troubleshooting 13-6

M/T Reverse Shift Lever
Inspection 13-38

M/T Shift Lever
Replacement 13-76

Main Valve Body
Removal 14-260
Repair 14-262
Installation 14-263, 298
Disassembly/Inspection/
Reassembly 14-264

Mainshaft Bearing, Torque Converter Housing
Replacement 14-271

Mainshaft Oil Seal
Replacement 13-65

Mainshaft Sealing Rings
Replacement 14-276

Maintenance
(See section 3)

Map Light/Spotlight
Replacement
Lights, Interior 22-207
Map Light/Spotlight
Components 22-207

MIL Circuit
Troubleshooting 11-148

Mirrors
Component Location Index 20-33

Mode Control Motor
Replacement 21-70, 71
Test 21-70, 71

Moonroof Control Unit
How-to Information 22-286
Input Test 22-288

Moonroof Drain Channel
Replacement 20-52

Moonroof Frame
Replacement 20-55

Moonroof Glass
Adjustment 20-51
Replacement 20-51

Moonroof Inner Cable
Replacement 20-57

Moonroof Motor
Replacement 20-54

Moonroof Sunshade
Replacement 20-53

Moonroof Switch
Test/Replacement 22-290

Moonroof Wind Deflector
Replacement 20-52

Moonroof/Sunroof
Component Location Index ... 20-49, 22-285
Test 20-59
Circuit Diagram 22-287

MTF
Inspection/Replacement 13-10

Multiplex Control System
Component Location Index 22-78
Description 22-89
Troubleshooting 22-108, 109, 110, 111, 112
Circuit Diagram 22-116

Multiplex Control Unit, Door
Input Test 22-135

Multiplex Integrated Control Unit
Input Test
Entry Light Control System 22-214
Keyless Entry/Security Alarm System 22-150
Multiplex Control System 22-130, 278

Protected by ARA

N

Navigation
Component Location Index 22-455
How-to Information 22-456
Description 22-462
Circuit Diagram 22-486
Troubleshooting 22-490, 491, 493, 494, 499, 501, 505, 506, 507, 508, 509, 510, 512, 513
Test 22-514
Repair 22-533

Navigation Unit
Removal/Installation 22-534

Navigation Unit DVD-ROM
Replacement 22-533

O

Oil Filter
Replacement 8-6

Oil Filter Feed Pipe
Replacement 8-8

Oil Pan
Removal 7-11
Installation 7-28

Oil Pressure Switch
Test 8-5
Replacement 8-12

Oil Pump, Engine
Overhaul 8-9

Oil Pump, M/T
Inspection 13-40

Oil, Engine
Replacement 8-6

OPDS Unit
Replacement 23-146

Output Shaft (Countershaft) Speed Sensor
Replacement
A/T Electronic Control System 14-196
Fuel Injection System (PGM-FI) 11-170

Outside Air Temperature Indicator
How-to Information 22-266

Outside Air Temperature Sensor
Replacement 21-64
Test 21-64

Outside Mirror Holders
Replacement 20-34

Outside Power Mirror Actuators
Test 22-308
Replacement 22-309

Outside Power Mirror Switch
Test/Replacement 22-307

Outside Power Mirrors
Replacement 20-34
Component Location Index 22-305

P

Park Lever Position Stop
Inspection/Adjustment 14-254

Park Pin Switch
Replacement 14-251
Test 14-251

Parking Brake
Inspection/Adjustment 19-7
Inspection 19-30

Parking Brake Cable
Replacement 19-39

Parking Brake Shoes
Replacement 19-32
Repair 19-35

Parking Brake Switch
Test 19-12

Parking/Side Marker Lights
Circuit Diagram 22-174

PCV Valve
Replacement 11-297
Test/Inspection 11-297

PGM-FI Main Relay Circuit
Troubleshooting 11-241

Piston Rings
Replacement 7-21

Pistons
Replacement 7-18

Power Mirror Memory Control Unit
Input Test 22-350

Power Seat Control Unit
Input Test 22-348

Power Seat Linkage
Disassembly/Reassembly 20-103

Power Seat Motors
Replacement
Front Seats 20-104
Test
Driving Position Memory System 22-384
Front Seats 22-321

Power Seat Switch
Test/Replacement
Driving Position Memory System 22-386
Front Seats 22-320

Power Steering Fluid
Replacement 17-12

Power Steering Lines and Hoses
Replacement 17-13

Power Steering Pump
Test 17-9, 10
Replacement 17-14
Overhaul 17-16

Power Window Motor, Driver's
Test 22-238

Power Window Motor, Rear
Test 22-239

Power Window Relay
Test 22-75

Power Window Switch, Master
Repair 22-221
Input Test 22-232
Replacement 22-239

Power Window Switch, Passenger's
Input Test 22-235
Test/Replacement 22-240

Power Windows
Component Location Index 22-219
Description 22-220
Circuit Diagram 22-223

PSP (Power Steering Pressure) Switch Signal Circuit
Troubleshooting 11-235

R

Radiator
Test 10-3
Replacement 10-10

Radiator and Condenser Fans High Speed Circuit
Troubleshooting 21-58

Radiator and Condenser Fans Low Speed Circuit
Troubleshooting 21-52

Radiator Cap
Test 10-3

Radiator Fan Assembly
Test 10-4

Radiator Fan Circuit
Troubleshooting 10-14

Radio Remote Switch
Test/Replacement 22-423

Rear Air Outlet
Replacement 20-146

(cont'd)

Protected by AR

Service Manual Index

(cont'd)

Rear Door Hook Pin
Replacement 20-29

Rear Doors
Component Location Index 20-5

Rear Suspension
Component Location Index 18-4

Rear Window Defogger
Component Location Index 22-281
Circuit Diagram 22-282

Rear Window Defogger Wires
Test 22-283
Repair 22-284

Rear Window Glass
Replacement 20-43

Receiver/Dryer
Replacement 21-87

Recirculation Control Motor
Replacement 21-72
Test 21-72

Recirculation Control Motor Circuit
Troubleshooting 21-49

Refrigerant
Replacement 21-88, 89, 90
Test 21-91

Refrigerant Oil
Replacement 21-6

Regulator Valve Body
Disassembly/Inspection/
Reassembly 14-266

Relay Control Module
Input Test 22-137

Resonator
Removal/Installation 11-274

Reverse Lockout Solenoid
Disassembly/Reassembly 13-8
Test 13-8

Rocker Arm Assembly
Removal 6-35
Disassembly/Reassembly 6-36

Rocker Arms
Test 6-7
Inspection 6-37

Roof Moldings
Replacement 20-134

S

Seat Armrest, Rear
Replacement 20-113

Seat Belt Tension Reducer, Driver's
Circuit Diagram 22-297
Test 22-298

Seat Belts
Component Location Index 23-3

Seat Belts, Front
Replacement 23-4
Inspection 23-9

Seat Belts, Rear
Replacement 23-7

Seat Cover, Front
Replacement 20-107

Seat Cushion Cover, Rear
Replacement 20-117

Seat Heater Elements
Test 22-313

Seat Heater Switches
Test 22-314

Seat Heaters
Component Location Index 22-311
Circuit Diagram 22-312

Seat, Front
Removal/Installation 20-99
Disassembly/Reassembly 20-101, 102

Seat, Rear
Removal/Installation 20-112

Seat-back Cover, Rear
Replacement 20-115

Secondary Shaft Bearing, Torque Converter Housing
Replacement 14-272

Secondary Shaft Idler Gear Bearing
Replacement 14-284

Security Indicator
Test 22-160

Select Arm
Inspection 13-39

Servo Body
Disassembly/Inspection/
Reassembly 14-267

Shift Arm
Inspection 13-40

Shift Control Solenoid Valves
Test 14-180, 182, 184
Replacement 14-181, 183, 185

Shift Forks
Inspection 13-41
Disassembly/Reassembly 13-43

Shift Lever Housing
Replacement 13-77

Shift Lock Solenoid
Replacement 14-250
Test 14-250

Shift Lock System Circuit
Troubleshooting 14-246

Side Airbag, Driver's
Replacement 23-131

Side Curtain Airbag
Replacement 23-132

Side Impact Sensors
Replacement 23-144, 145

Side Marker Light
Replacement 22-191

Side Sill Panels
Replacement 20-136, 137

Spark Plugs
Inspection 4-21

Speakers
Test 22-389

Specifications
(See section 2)

Splash Shield
Replacement 20-143

SRS
Component Location Index 23-11
Description 23-31
Circuit Diagram 23-34
Inspection/Replacement 23-125

SRS Indicator Circuit
Troubleshooting 23-121, 123

SRS Unit
Replacement 23-143

Stabilizer Bar
Replacement
Front Suspension 18-23
Rear Suspension 18-40

Stabilizer Links
Replacement
Front Suspension 18-22
Removal/Installation
Rear Suspension 18-39

Starter
Test 4-9
Replacement 4-10
Overhaul 4-11

Starter Solenoid
Test 4-8

Starting System
Component Location Index 4-3
Circuit Diagram 4-5
Troubleshooting 4-6

Protected by AR

Steering
Component Location Index 17-3
Troubleshooting 17-6
Inspection 17-7, 11

Steering Angle Sensor
Replacement 19-92

Steering Column
Removal/Installation 17-24
Inspection 17-27

Steering Gearbox
Removal 17-29
Overhaul 17-36
Installation 17-52

Steering Gearbox Mount Cushion
Replacement 17-58

Steering Hanger Beam
Replacement 20-94

Steering Linkage
Inspection 17-8

Steering Lock
Replacement 17-27

Steering Rack Guide
Adjustment 17-28

Steering Wheel
Inspection 17-7
Removal 17-21
Disassembly/Reassembly 17-22
Installation 17-23

Stereo Amplifier
Removal/Installation 22-420

Subframes
Replacement 20-156

Sunlight Sensor
Replacement 21-65
Test 21-65

Suspension
Adjustment 18-5

Synchro Ring, Double-cone
Inspection 13-63

Synchro Sleeve
Inspection/Reassembly 13-63

T

Taillight
Replacement 22-193, 194

Thermostat
Test 10-4
Replacement 10-8

Throttle Actuator Control Module
Replacement 11-216

Throttle Body
Repair 11-272
Test 11-272
Removal/Installation 11-277
Disassembly/Reassembly 11-278

Throttle Cable
Adjustment 11-275
Removal/Installation 11-276

Tie-rod Ball Joint Boots
Replacement 17-58

Timing Belt
Inspection 6-13
Removal 6-14
Installation 6-16

Timing Belt Adjuster
Replacement 6-26

Timing Belt Drive Pulley
Replacement 6-26

Top Accumulator Body
Disassembly/Inspection/
Reassembly 14-268

Torque Converter
Description 14-70
Test 14-176

Torque Converter Clutch Solenoid Valve
Test 14-186
Replacement 14-187

Trailing Arms
Removal/Installation 18-37

Transmissiom Gear Selection Switch
Replacement 14-202
Test 14-202

Transmission Housing
Removal 14-257
Installation 14-300

Transmission Range Switch
Test 14-240
Replacement 14-242

Trim
Component Location Index 20-61
Removal/Installation 20-62, 66, 68, 69

Trip Meter Select/Reset/Information Switch
Test/Replacement 22-268

Troubleshooting
(See first page of this Index)

Trunk Latch Switch
Test 22-211

Trunk Lid
Adjustment 20-125
Circuit Diagram 22-300

Trunk Lid Latch
Replacement 20-154

Trunk Lid Opener Cable
Replacement 20-150

Trunk Lid Opener Main Switch
Test 22-301

Trunk Lid Opener Solenoid
Component Location Index
Keyless Entry/Security Alarm System 22-299
Test
Trunk Lid 22-302

Trunk Lid Opener Switch
Test 22-301

Trunk Lid Torsion Bar
Replacement 20-126

Trunk Lid Weatherstrip
Replacement 20-127

Trunk Light Assembly
Test/Replacement 22-211

Trunk Pass-through Cover
Replacement 20-114

Trunk Pass-through Cover Key Cylinder
Replacement 20-113

Turn Signal/Hazard Relay
Test 22-198

Turn Signal/Hazard Warning Lights
Component Location Index 22-195
Circuit Diagram 22-196

U

Under Cover, Rear
Replacement 20-139

Under-dash Fuse/Relay Box
Removal/Installation 22-73

Under-hood Fuse/Relay Box
Removal/Installation 22-71

Upper Arms
Replacement
Front Suspension 18-18
Removal/Installation
Rear Suspension 18-35

V

Valve Guides
Inspection 6-43
Replacement 6-44

Valve Seats
Repair 6-46

(cont'd)

Protected by AR

Service Manual Index

(cont'd)

Valves
Adjustment 6-8
Removal 6-42
Inspection 6-43
Installation 6-48

Vanity Mirror Light Switch
Test 22-209

Vanity Mirror Lights
Replacement 22-209

VSA Activation Indicator Circuit
Troubleshooting 19-90

VSA Indicator Circuit
Troubleshooting 19-88, 89

VSA Modulator-control Unit
Removal/Installation 19-96

VSA Off Switch
Test 19-95

VSA Pressure Sensor
How-to Information 19-94

VSA System Components
Component Location Index 19-42
How-to Information 19-43
Description 19-48
Circuit Diagram 19-60

VTEC Oil Pressure Switch
Replacement 11-227

VTEC Solenoid Valve
Test 11-226
Removal/Installation 11-227

VTEC System
Component Location Index 11-217

W

Washer Fluid Level Switch
Test 22-252

Washer Fluid Reservoir
Replacement 22-252

Washer Motor, Windshield
Test 22-250

Washer Tube, Windshield
Replacement 22-253

Water Passage
Replacement 10-9

Water Pump
Inspection 10-5
Replacement 10-5

Wheel Bearings
Inspection 18-8

Wheel Speed Sensors
Inspection 19-98
Replacement 19-99

Wheels and Tires
Inspection 18-8

Window Antenna Module
Replacement 22-424

Window Antenna Wires
Repair 22-425

Windows
Component Location Index 20-37

Windshield Glass
Replacement 20-38

Wiper Motor, Windshield
Test 22-250
Replacement 22-251

Wiper/Washer
Component Location Index 22-241
Circuit Diagram 22-242

Wiper/Washer Switch
Test/Replacement 22-248
Input Test 22-249

Wire Harnesses
(See first page of this Index)

Wiring System
How-to Information 22-3
Relay and Control Unit Locations 22-7, 8, 11, 12

X

XM Receiver
Description 22-391
Removal/Installation 22-420

XM Satellite Antenna
Replacement 22-424

Y

Yaw Rate-Lateral Acceleration Sensor
Replacement 19-93

1

1st Clutch Hub
Replacement 14-285

1st Gear One-way Clutch
Inspection 14-285

1st/1st-hold/2nd Clutch Assembly
Disassembly 14-286
Inspection 14-289
Resassembly 14-292

3

3rd Accumulator Body Spring
Disassembly/Inspection/Reassembly 14-270

3rd Clutch Ball Bearing
Replacement 14-280

3rd Clutch Transmission Fluid Pressure Switch
Replacement 14-197

4

4th Clutch Transmission Fluid Pressure Switch
Replacement 14-198

4th/5th Clutch Assembly
Inspection 14-275

Protected by AR